O-26 Record Drawings

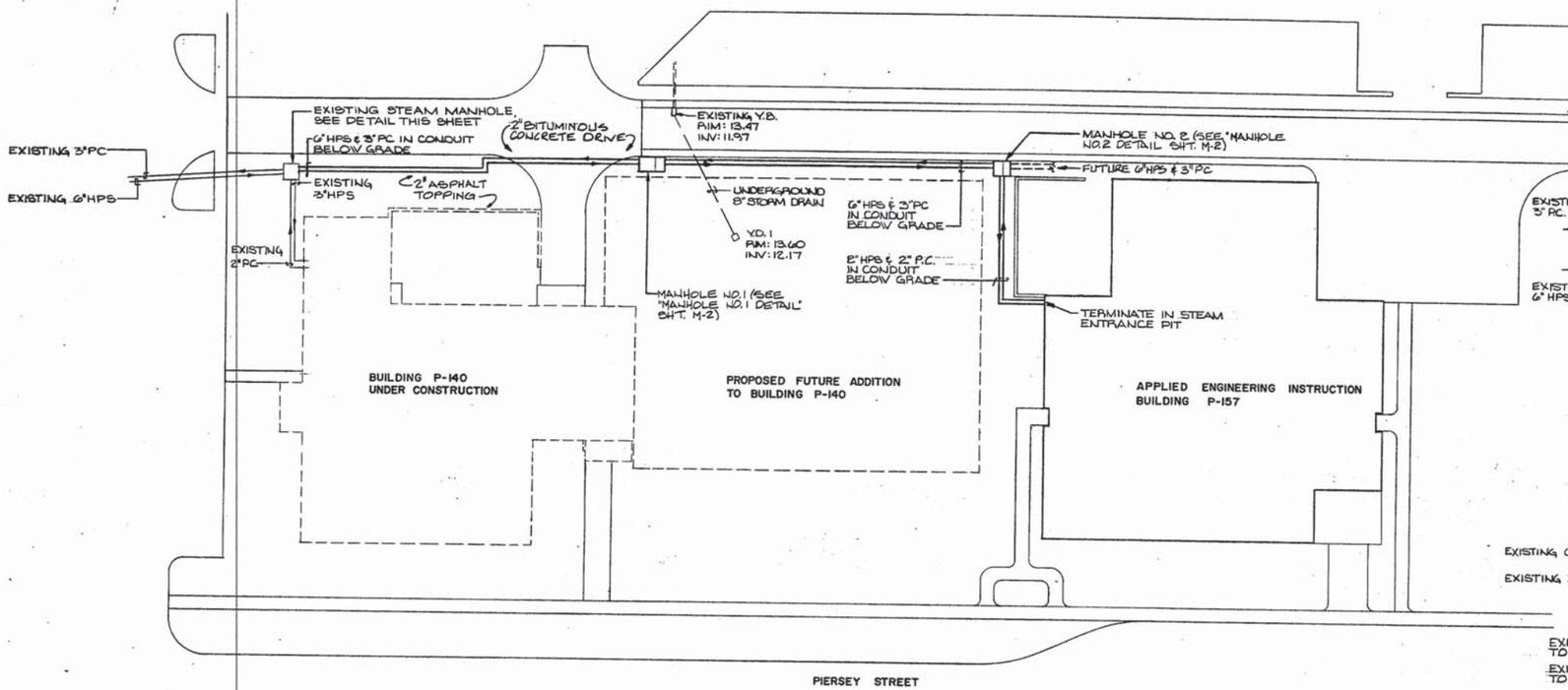

MECHANICAL SITE PLAN

SCALE: 1"=20'-0"

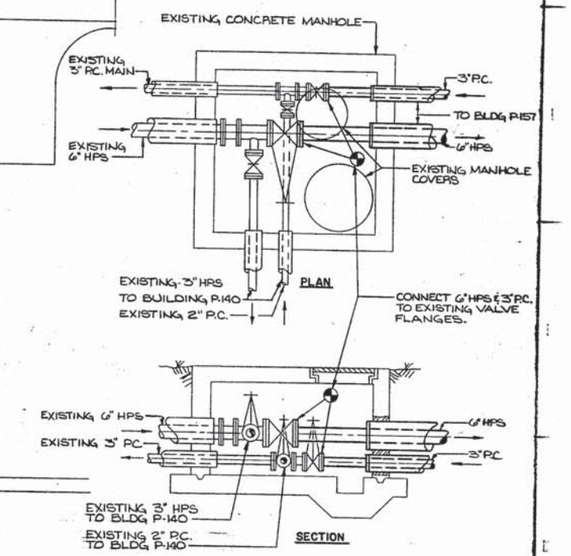

EXISTING MANHOLE DETAIL

SCALE: 1/2"=1'-0"

NOTE: MANHOLE & PIPING SHOWN AS EXISTING IS CURRENTLY BEING INSTALLED UNDER CONSTRUCTION CONTRACT N62470-81-C-1102.

NOTE: REFER TO CIVIL DRAWINGS PERTAINING TO REPLACEMENT AND REPAIRS TO EXISTING ASPHALT TOPING AND BITUMINOUS CONCRETE DRIVE.

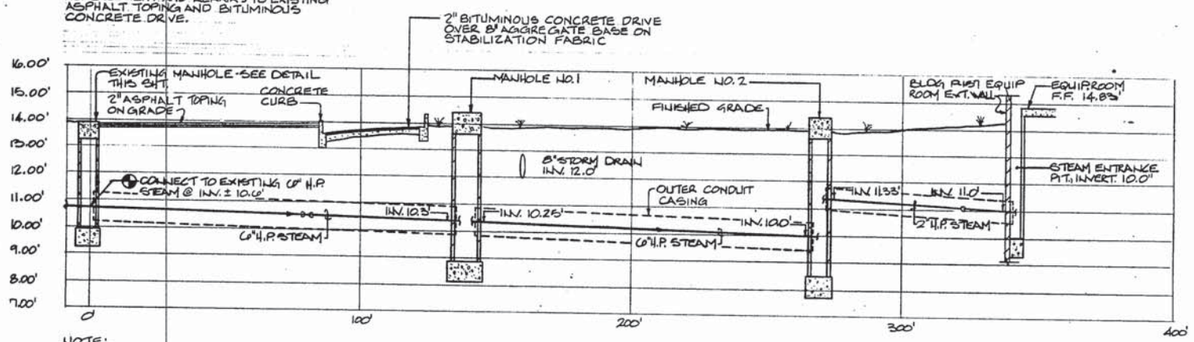

NOTE:
1.) MINIMUM SLOPE FOR STEAM MAIN TO BE 3" PER 100' PIPE RUN.

STEAM MAIN PROFILE

SCALE: HORIZONTAL: 1"=20'-0"
VERTICAL: 1"=2'-0"

GRAPHIC SCALES

1/2"=1'-0" 0 1 2 3 4 5 6 7 8
1"=2'-0" 0 1 2 4 6 8
1"=20'-0" 0 5 10 20 30 40 60 80

REVISIONS

SYM.	DESCRIPTION	DATE	APPROVED

M-1

BOWMAN AND ASSOCIATES, P.C.
Consulting Engineers
5648 SOUTHERN BOULEVARD
VIRGINIA BEACH, VIRGINIA 23462

COMMONWEALTH OF VIRGINIA
No. 30316
83-1
PROFESSIONAL ENGINEER

WALLER, TODD & SADLER ARCHITECTS, INC.
VIRGINIA BEACH VIRGINIA

EFD DWG. NO. 209606
JOB ORDER NO. SF 3026
STA. PROJ. NO. P-157
DES. AJM DRWN. RER
PROJ. MGR. AJM CH. ARCH/ENGR. RDF
EFD RVD HWC
BR. MGR. DES. DIR.
APPROVED DATE 9.25.84
ACTIVITY-SATISFACTORY TO
APPROVED DATE 17 OCT 1984
FOR EFD FOR COMMANDER NAVFAC

DEPARTMENT OF THE NAVY — NAVAL FACILITIES ENGINEERING COMMAND
ATLANTIC DIVISION
NAVAL STATION NORFOLK, VA.

FLEET TRAINING CENTER
NORFOLK, VA.

APPLIED ENGINEERING INSTRUCTION BUILDING
MECHANICAL SITE PLAN

SIZE F | CODE IDENT. NO. 80091 | NAVFAC DRAWING NO. 4109606
CONSTR. CONTR. NO. N62460-83-B-3026
SCALE NOTED | SPEC. 05-83-3026 | SHEET 45 OF 70

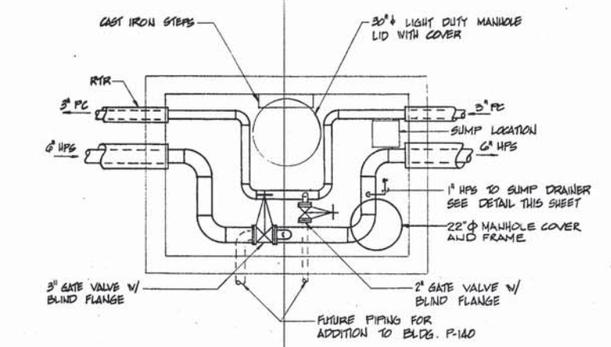

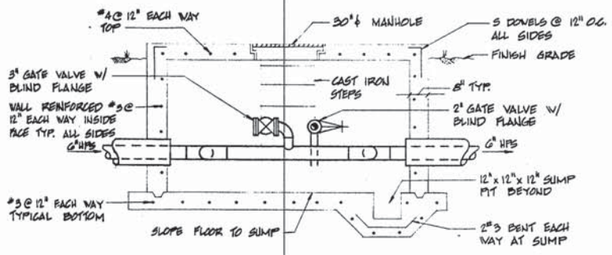

MANHOLE NO. 1 DETAIL
SCALE 1/2"=1'-0"

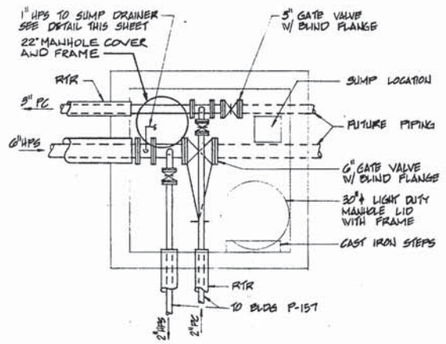

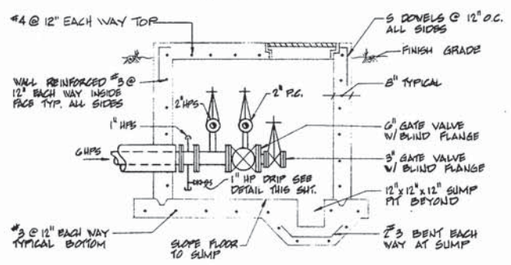

MANHOLE NO. 2 DETAIL
SCALE 1/2"=1'-0"

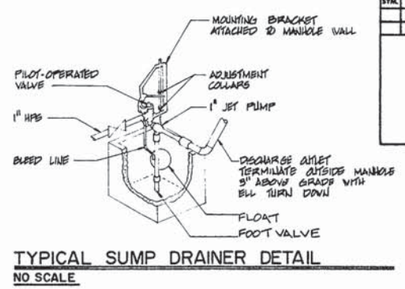

TYPICAL SUMP DRAINER DETAIL
NO SCALE

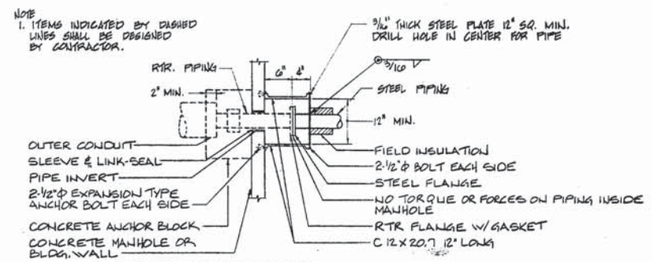

PUMPED CONDENSATE (HOT WATER)
NO SCALE

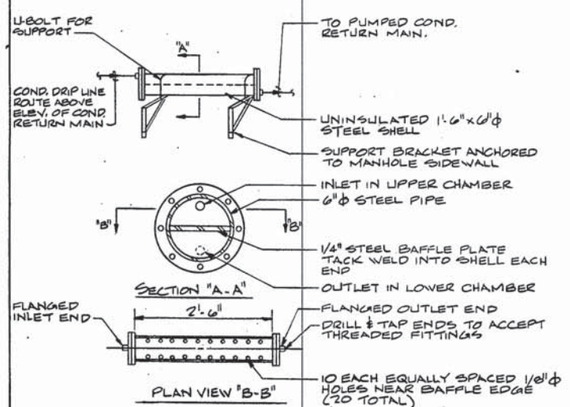

BAFFLE CHAMBER DETAIL
NO SCALE

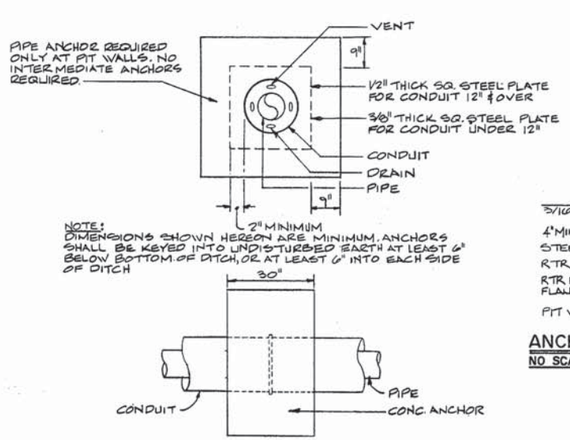

CONCRETE ANCHOR DETAIL FOR CONDUIT
NO SCALE

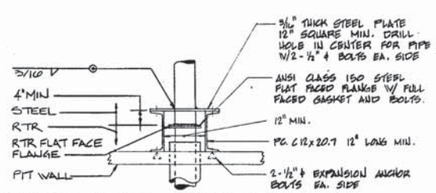

ANCHOR DETAIL INSIDE PIT
NO SCALE

GRAPHIC SCALE
0 1 2 3 4 5 6 7
1/2"=1'-0"

NOTE:
1. ITEMS INDICATED BY DASHED LINES SHALL BE DESIGNED BY CONTRACTOR.

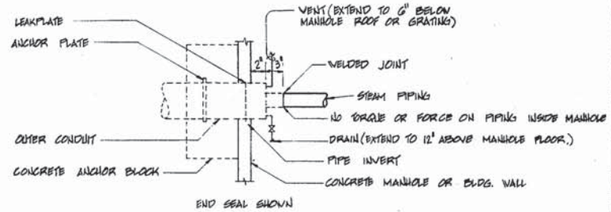

STEAM CLASS "A"
NO SCALE

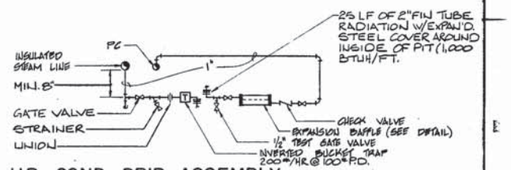

H.P. COND. DRIP ASSEMBLY
NO SCALE

REVISIONS			
SYM.	DESCRIPTION	DATE	APPROVED

M-2

BOWMAN AND ASSOCIATES, P.C. Consulting Engineers 5648 SOUTHERN BOULEVARD VIRGINIA BEACH, VIRGINIA 23462

WALLER, TODD & SADLER ARCHITECTS, INC. VIRGINIA BEACH VIRGINIA

DEPARTMENT OF THE NAVY NAVAL FACILITIES ENGINEERING COMMAND
ATLANTIC DIVISION
NAVAL STATION NORFOLK, VA.
FLEET TRAINING CENTER NORFOLK, VA.

APPLIED ENGINEERING INSTRUCTION BUILDING
MECHANICAL STEAM MANHOLE DETAILS

BID DWG. NO. 209607
JOB ORDER NO. SF 3026
STA. PROJ. NO. P-157
DES. A.J.M DRWN. R.E.R
PROJ. MGR. A.J.M CH. ARCH/ENGR. R.O.F
BID RVD H.W.C RP. T.M.C
SR. MGR. J.R.W DES. DIR. K.D
APPROVED DATE 9-25-84
ACTIVITY-SATISFACTORY TO
APPROVED DATE 17 OCT 1984
FOR BID FOR COMMANDER NAVFAC

COMMONWEALTH OF VIRGINIA DONALD R. DEITZ No. 10316 B3-1 PROFESSIONAL ENGINEER

SIZE F | CODE IDENT. NO. 80091 | NAVFAC DRAWING NO. 409607
CONTR. CONTR. NO. N62460-83-B-3026
SCALE NOTED | SPEC. 05-83-3026 | SHEET 46 OF 70

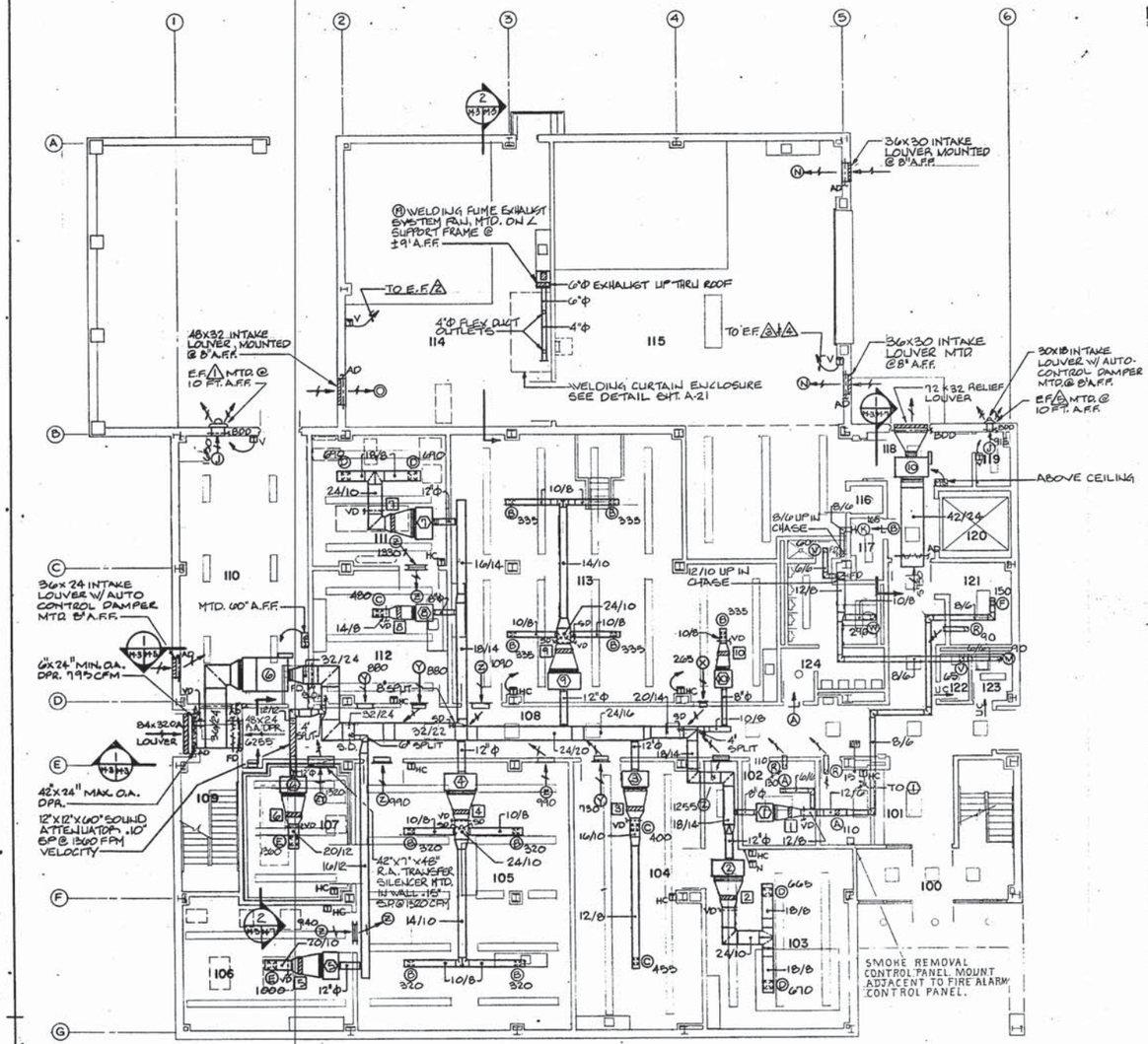

MECHANICAL FIRST FLOOR PLAN - AIR DISTRIBUTION

SCALE: 1/8"=1'-0"

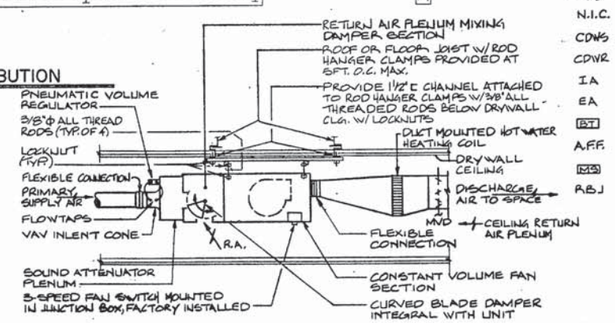

TERMINAL AIR BLENDER/VARIABLE VOLUME UNIT DETAIL (TYPICAL)

NO SCALE

LEGEND

- (1) EQUIPMENT MARK - SEE SCHEDULE
- (A)100 GRILLE & DIFFUSER MARK - SEE SCHEDULE (CFM NOTED).
- HEATING COIL MARK - SEE SCHEDULE
- SUPPLY DUCT SECTION
- RETURN OR EXHAUST DUCT SECTION
- S.A. SUPPLY AIR
- R.A. RETURN AIR
- O.A. OUTSIDE AIR
- F.D. FIRE DAMPER W/ACCESS DOOR
- T_H HEATING THERMOSTAT, MOUNTED @ 60" ABOVE FLOOR.
- T_N NIGHT THERMOSTAT, MOUNTED @ 60" ABOVE FLOOR.
- T_HC HEATING & COOLING THERMOSTAT, MOUNTED @ 60" ABOVE FLOOR.
- F FAN SWITCH - FLUSH MOUNTED, 54" ABOVE FLOOR.
- ELBOW W/ TURNING VANES.
- 60 SPLITTER DAMPER
- T_V VENTILATION THERMOSTAT, MOUNTED @ 60" ABOVE FLOOR
- OPPOSED BLADE DAMPER
- FLEXIBLE DUCT CONNECTION
- (T) TERMINAL AIR BLENDER MARK - SEE SCHEDULE
- DOOR LOUVER - SEE SCHEDULE
- UC UNDERCUT DOOR
- POINT OF CONNECTION - NEW TO EXISTING.
- —HP— HIGH PRESSURE STEAM PIPING, 125 PSIG
- —PC— PUMPED CONDENSATE PIPING.
- —LP— LOW PRESSURE STEAM PIPING, 15 PSIG
- —LPR— LOW PRESSURE CONDENSATE RETURN PIPING.
- —⊗— CONDENSATE TRAP ASSEMBLY
- —HWS— HOT WATER SUPPLY PIPING
- —HWR— HOT WATER RETURN PIPING
- —CWS— CHILLED WATER SUPPLY PIPING
- —CWR— CHILLED WATER RETURN PIPING
- —D— CONDENSATE DRAIN PIPING
- —⊗— FLOW CONTROL BALANCING VALVE
- —⋈— GATE VALVE
- —⋈— CHECK VALVE
- —⋈— STRAINER W/BLOWDOWN VALVE
- —⋈— 3-WAY CONTROL VALVE
- THERMOMETER
- FLEXIBLE PIPING CONNECTION
- PRESSURE GAUGE W/SHUT-OFF COCK
- MAV MANUAL AIR VENT
- UNION
- PIPE SLOPE (DOWN IN ARROW DIRECTION)
- RAD AUTOMATIC CONTROL DAMPER
- MVD MANUAL VOLUME DAMPER
- BDD GRAVITY BACKDRAFT DAMPER
- TW THERMOMETER WELL
- (1) EXHAUST FAN MARK - SEE SCHEDULE
- —PD— PUMPED DISTILLED WATER PIPING
- N.I.C. NOT IN CONTRACT
- CDWS CONDENSER WATER SUPPLY PIPING
- CDWR CONDENSER WATER RETURN PIPING
- IA COMPRESSOR INTAKE AIR PIPING
- EA COMPRESSOR EXHAUST AIR PIPING
- BST NITE SETBACK BYPASS TIMER SWITCH
- A.F.F. ABOVE FINISH FLOOR
- MS MAGNETIC MOTOR STARTER
- R.B.J. RUN BETWEEN JOIST

GRAPHIC SCALE

1/8"=1'-0" 0 1 2 3 4 5 10 20 30

3/8"=1'-0" 0 1 2 3 4 5 10

REVISIONS			
SYM.	DESCRIPTION	DATE	APPROVED

DESIGN CONDITIONS

INDOORS			OUTDOORS		
SUMMER		WINTER	SUMMER		WINTER
°FDB	%RH	°FDB	°FDB	°FWB	°FDB
78	50	68	91	76	23

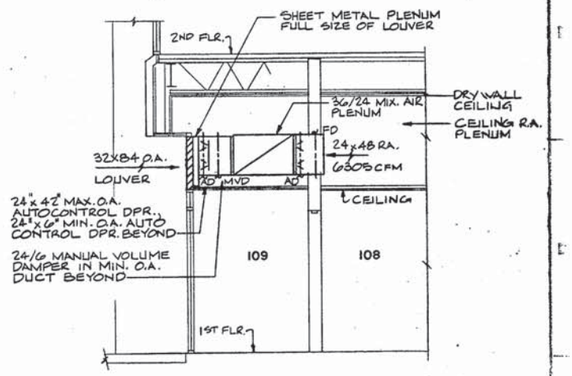

SECTION

SCALE 3/8"=1'-0" (TYPICAL FOR 2ND THRU 4TH FLOORS ALSO)

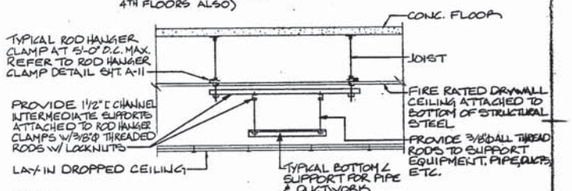

NOTE:
ALL MECHANICAL EQUIPMENT, DUCTWORK, PIPING, ETC. SHALL BE SUPPORTED FROM 3/8" ROD HANGER CLAMPS EXTENDING BELOW FIRE RATED DRYWALL CEILING EXCEPT AS INDICATED OTHERWISE FOR AIR HANDLING UNITS. ROD HANGER CLAMPS ARE PROVIDED AT 8FT O.C. REFER TO ROD HANGER CLAMP DETAIL, SHT. A-11

TYPICAL EQUIPMENT SUPPORT DETAIL

NO SCALE

M-3

BOWMAN AND ASSOCIATES, P.C. Consulting Engineers 848 SOUTHERN BOULEVARD VIRGINIA BEACH, VIRGINIA 23462

WALLER, TODD & SADLER ARCHITECTS, INC. VIRGINIA BEACH · VIRGINIA

DEPARTMENT OF THE NAVY — NAVAL FACILITIES ENGINEERING COMMAND
ATLANTIC DIVISION
NAVAL STATION — NORFOLK, VA.

FLEET TRAINING CENTER
NORFOLK, VA

APPLIED ENGINEERING INSTRUCTION BUILDING
MECHANICAL FIRST FLOOR PLAN - AIR DISTRIBUTION

BPD DWG. NO.	209608
JOB ORDER NO.	SF 3026
STA. PROJ. NO.	P-257
DES.	AJM
DRWN.	RER
PROJ. MGR.	AJM
CH. ARCH/ENGR.	RDF
BPD RVD	HWC
RR. MGR.	
DES. DR.	
APPROVED	DATE 9-25-64
ACTIVITY-SATISFACTORY TO	
APPROVED	DATE OCT 15-64
FOR BPD NOT COMMANDER NAVFAC	

SIZE: F — CODE IDENT. NO.: 80091 — NAVFAC DRAWING NO.: 4609608
CONSTR. CONTR. NO.: N62460-83-B-3026
SCALE: NOTED — SPEC. 05-83-3026 — SHEET 47 OF 70

RICHARD B. PORTER No. 10258 65-1 PROFESSIONAL ENGINEER — COMMONWEALTH OF VIRGINIA

REVISIONS			
SYM.	DESCRIPTION	DATE	APPROVED

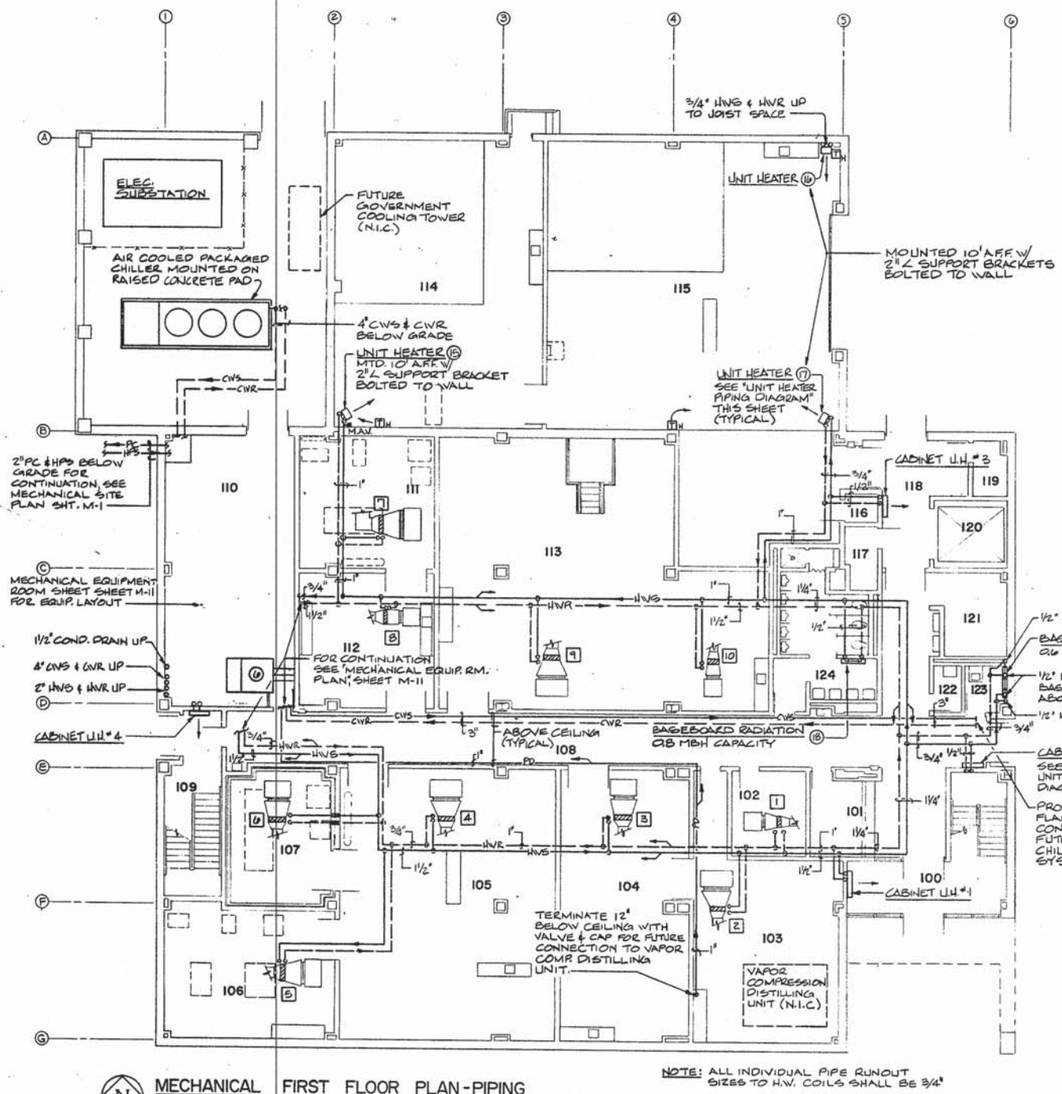

MECHANICAL FIRST FLOOR PLAN-PIPING
SCALE: 1/8"=1'-0"

NOTE: ALL INDIVIDUAL PIPE RUNOUT SIZES TO H.W. COILS SHALL BE 3/4"

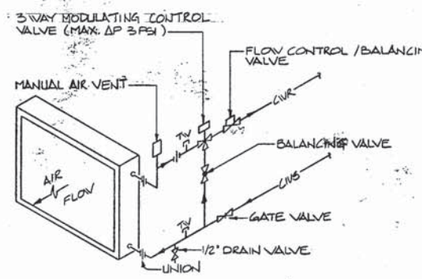

CHILLED WATER COIL PIPING DIAGRAM
NO SCALE

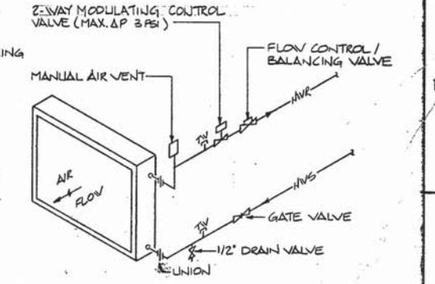

HOT WATER COIL PIPING DIAGRAM
NO SCALE

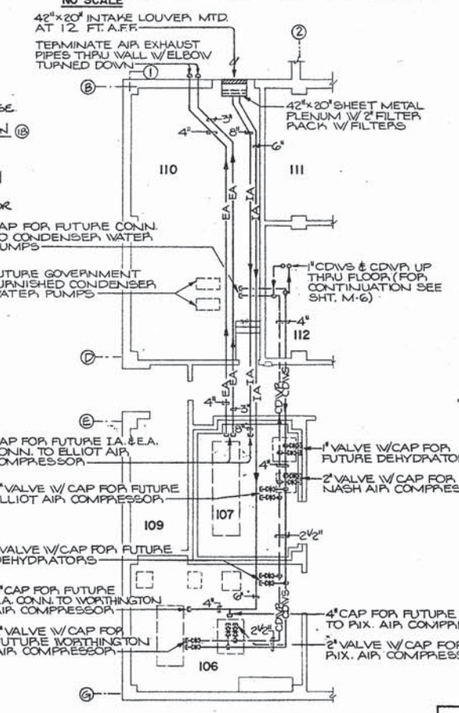

PART MECHANICAL FIRST FLOOR PLAN-PIPING
SCALE: 1/8"=1'-0"

NOTE: PLAN INDICATES ROUGH-IN AIR INTAKE, AIR EXHAUST & CONDENSER WATER PIPING FOR FUTURE GOVERNMENT FURNISHED AIR COMPRESSOR. (N.I.C.)

GRAPHIC SCALE
0 1 2 3 4 5 10 15 30
1/8"=1'-0"

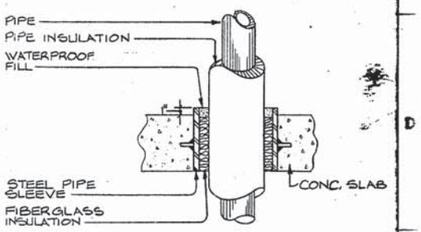

PIPE SLEEVE DETAIL
NO SCALE

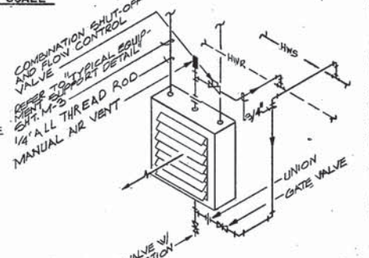

UNIT HEATER PIPING DIAGRAM
NO SCALE

NORMAN AND ASSOCIATES, P.C.
Consulting Engineers
5648 SOUTHERN BOULEVARD
VIRGINIA BEACH, VIRGINIA 23462

WALLER, TODD & SADLER
ARCHITECTS, INC.
VIRGINIA BEACH VIRGINIA

COMMONWEALTH OF VIRGINIA
HAROLD E. REITER
No. 10316
83-1
PROFESSIONAL ENGINEER

BPD DWG. NO. 209609	
JOB ORDER NO. 5F 3026	
STA. PROJ. NO P-157	
DES. AJM	DRWN. WEE
PROJ. MGR. AJM	CH. ARCH/ENGR. RDF
BPD RVD. H.W.C.	P.P. YY/I/C
BR. MGR. H.W.C.	DES. DIR. K.S.
APPROVED:	DATE 9-25-84
ACTIVITY-SATISFACTORY TO	
APPROVED: FOR BPD FOR COMMANDER NAVFAC	DATE 17 OCT 1984

DEPARTMENT OF THE NAVY — NAVAL FACILITIES ENGINEERING COMMAND
ATLANTIC DIVISION
NAVAL STATION — NORFOLK, VA.

FLEET TRAINING CENTER
NORFOLK, VA.

APPLIED ENGINEERING INSTRUCTION BUILDING
MECHANICAL FIRST FLOOR PLAN-PIPING

SIZE	CODE IDENT. NO.	NAVFAC DRAWING NO. 4209609
F	80091	CONSTR. CONTR. NO. N62460-83-B-3026
SCALE NOTED	SPEC. 05-83-3026	SHEET 48 OF 70

M-4

REVISIONS			
SYM.	DESCRIPTION	DATE	APPROVED

MECHANICAL SECOND FLOOR PLAN - AIR DISTRIBUTION
SCALE: 1/8"=1'-0"

EXHAUST FAN DETAIL
NO SCALE

SECTION 2
SCALE: 1/4"=1'-0"

SECTION 1
SCALE 1/4"=1'-0"

M-5, M-7, M-9

GRAPHIC SCALE
1/8"=1'-0" 0 5 10 20 30
1/4"=1'-0" 0 1 2 3 4 5 10 15

BOWMAN AND ASSOCIATES, P.C.
Consulting Engineers
5648 SOUTHERN BOULEVARD
VIRGINIA BEACH, VIRGINIA 23462

COMMONWEALTH OF VIRGINIA — PROFESSIONAL ENGINEER — No. 10316 — 83-1

WALLER, TODD & SADLER ARCHITECTS, INC.
VIRGINIA BEACH VIRGINIA

EFD DWG. NO. 209610
JOB ORDER NO. SF 3026
STA. PROJ. NO. P-157
DES. AJM DRWN. RER
PROJ. MGR. AJM CH. ARCH/ENGR. RDF
EFD RVD AWC F.P.
BR. MGR. DES. DIR.
APPROVED DATE 9-25-84
ACTIVITY-SATISFACTORY TO
APPROVED DATE 17 OCT 1984
FOR EFD FOR COMMANDER NAVFAC

DEPARTMENT OF THE NAVY — NAVAL FACILITIES ENGINEERING COMMAND
ATLANTIC DIVISION
NAVAL STATION NORFOLK, VA.

FLEET TRAINING CENTER
NORFOLK, VA

APPLIED ENGINEERING
INSTRUCTION BUILDING
MECHANICAL SECOND FLOOR PLAN - AIR DISTRIBUTION

SIZE F | CODE IDENT. NO. 80091 | NAVFAC DRAWING NO. 409610
CONSTR. CONTR. NO. N62460-83-B-3026
SCALE NOTED | SPEC. 05-83-3026 | SHEET 49 OF 70

M-5

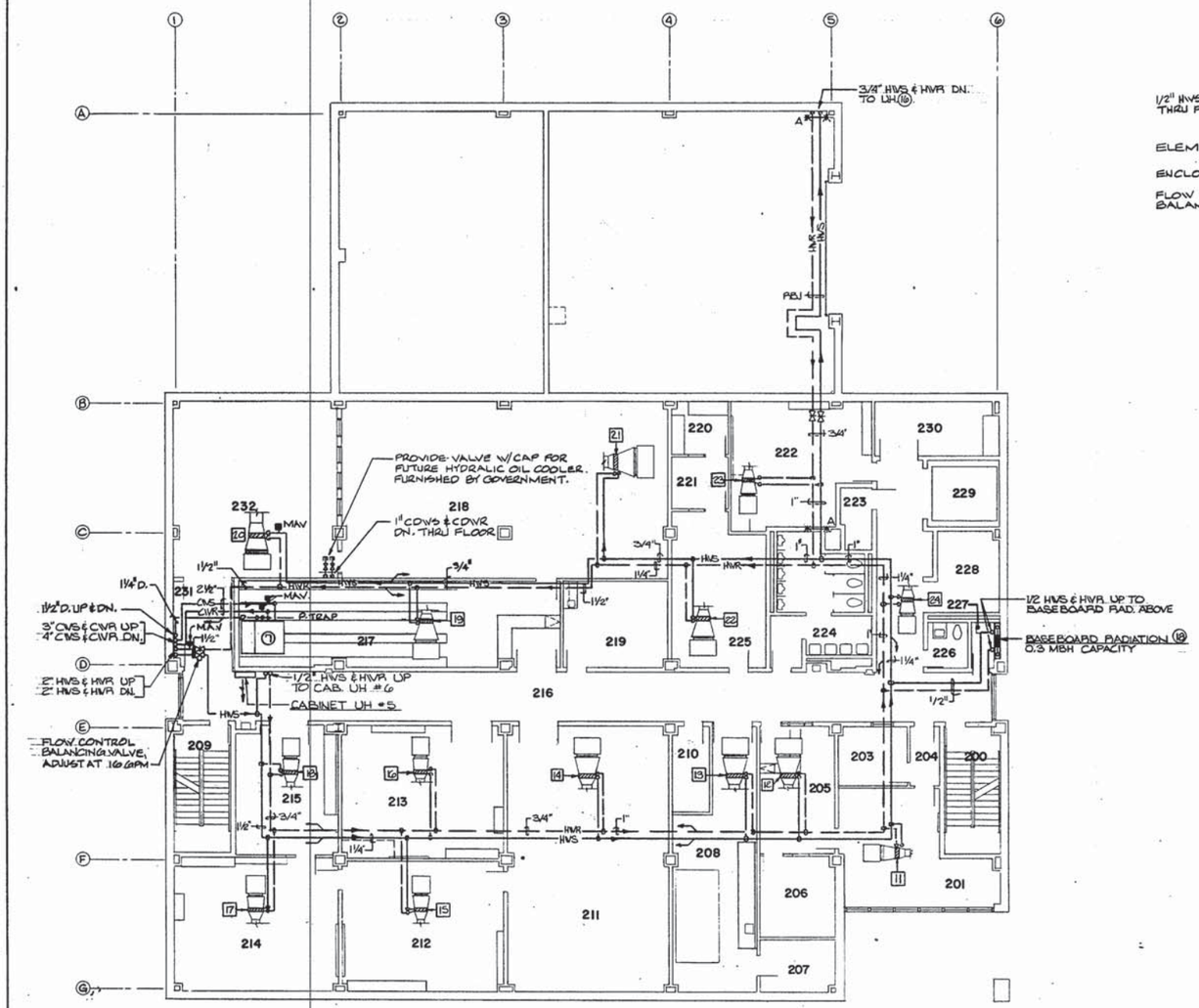

MECHANICAL SECOND FLOOR PLAN-PIPING
SCALE: 1/8"=1'-0"

NOTE: ALL INDIVIDUAL PIPE RUNOUT SIZES TO H.W. COILS SHALL BE 3/4".

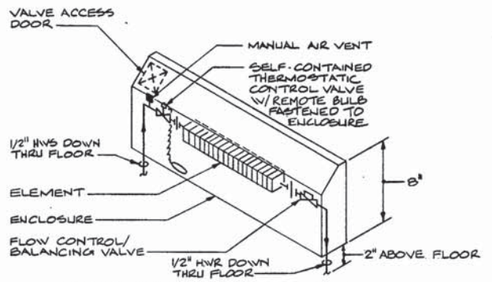

BASEBOARD RADIATION DETAIL
NO SCALE

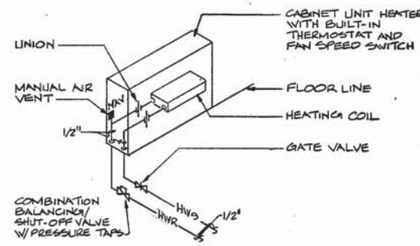

CABINET UNIT HEATER PIPING DIAGRAM
NO SCALE

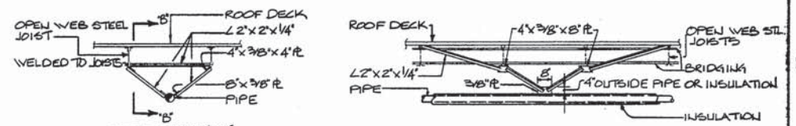

ANCHOR WITH JOISTS PARALLEL TO PIPE RUN
NOTE: IF PIPING IS DIRECTLY UNDER JOISTS ONLY TWO STRUTS TO JOIST DIRECTLY ABOVE ARE NEEDED INSTEAD OF FOUR AS SHOWN

ANCHOR WITH JOISTS PERPENDICULAR TO PIPE RUN
NOTE ANCHOR SHOULD BE LOCATED NEAR BRIDGING IF POSSIBLE. WELD ALL CONNECTIONS.

TYPICAL PIPE ANCHOR DETAILS
NO SCALE

REVISIONS			
SYM.	DESCRIPTION	DATE	APPROVED

GRAPHIC SCALE
1/8"=1'-0" 0 1 2 3 4 5 10 15 30

BOWMAN AND ASSOCIATES, P.C. Consulting Engineers 5648 SOUTHERN BOULEVARD VIRGINIA BEACH, VIRGINIA 23462
COMMONWEALTH OF VIRGINIA — DONALD B. SMITH — No. 10316 — 83-1 — PROFESSIONAL ENGINEER

WALLER, TODD & SADLER ARCHITECTS, INC. VIRGINIA BEACH VIRGINIA

DEPARTMENT OF THE NAVY — NAVAL FACILITIES ENGINEERING COMMAND
ATLANTIC DIVISION
NAVAL STATION — NORFOLK, VA.

FLEET TRAINING CENTER
NORFOLK, VA.

APPLIED ENGINEERING INSTRUCTION BUILDING
MECHANICAL SECOND FLOOR PLAN-PIPING

M-6

SPD DWG. NO. 20961		
JOB ORDER NO. 5F 3026		
STA. PROJ. NO. P-157		
DES. A/M	DRWG. WEE	
PROJ. MGR. A/M	CH. ARCH/ENGR. RDF	
SPD RVD [illegible]	P.P. YY/PC	
DE. MGR. [illegible]	DES. DR. KD	
APPROVED [illegible] DATE 9-25-84		
ACTIVITY-SATISFACTORY TO		
APPROVED [illegible] DATE 1 OCT 1984		
FOR SPD FOR COMMANDER NAVFAC		

SIZE	CODE IDENT. NO.	NAVFAC DRAWING NO.
F	80091	4109611
SCALE NOTED	SPEC. 05-83-3026	CONSTR. CONTR. NO. N62460-83-B-3026
		SHEET 50 OF 70

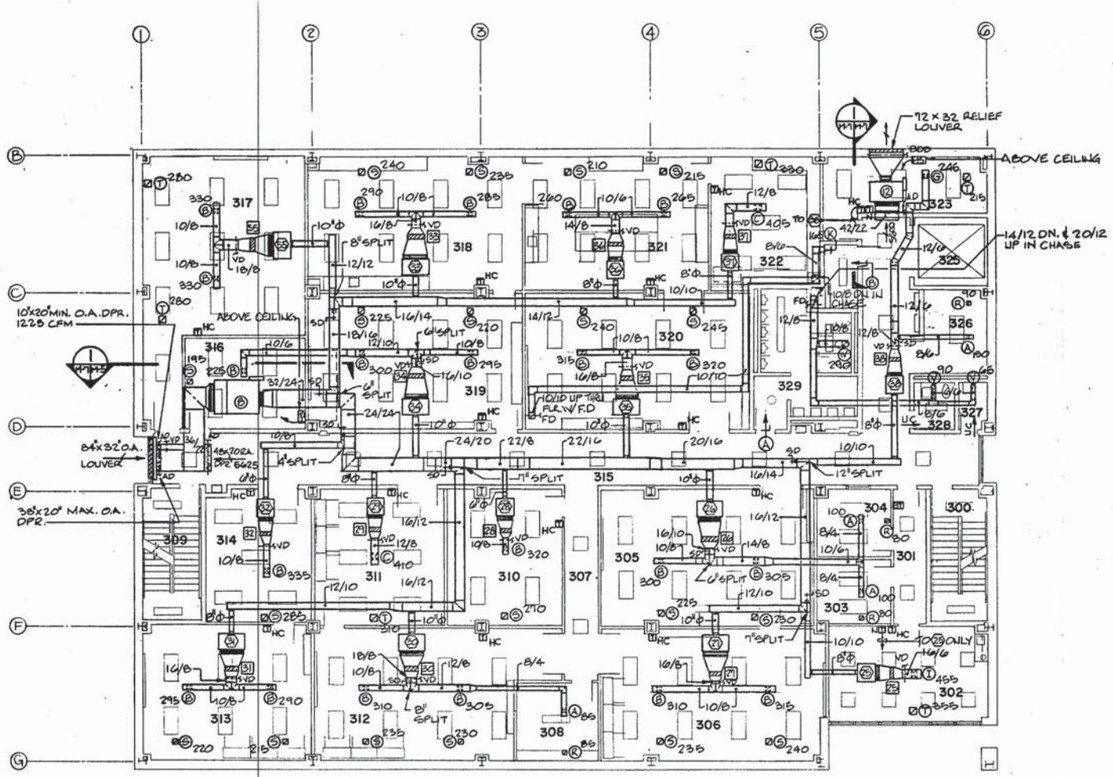

MECHANICAL THIRD FLOOR PLAN - AIR DISTRIBUTION
SCALE: 1/8" = 1'-0"

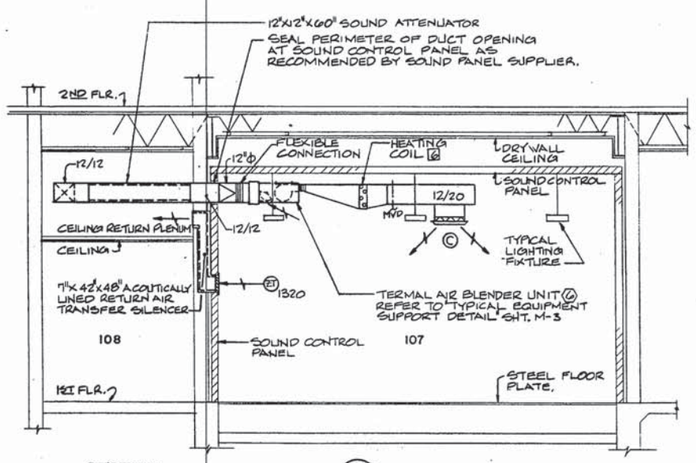

SECTION 2 M-3/M-7
SCALE 3/8" = 1'-0"

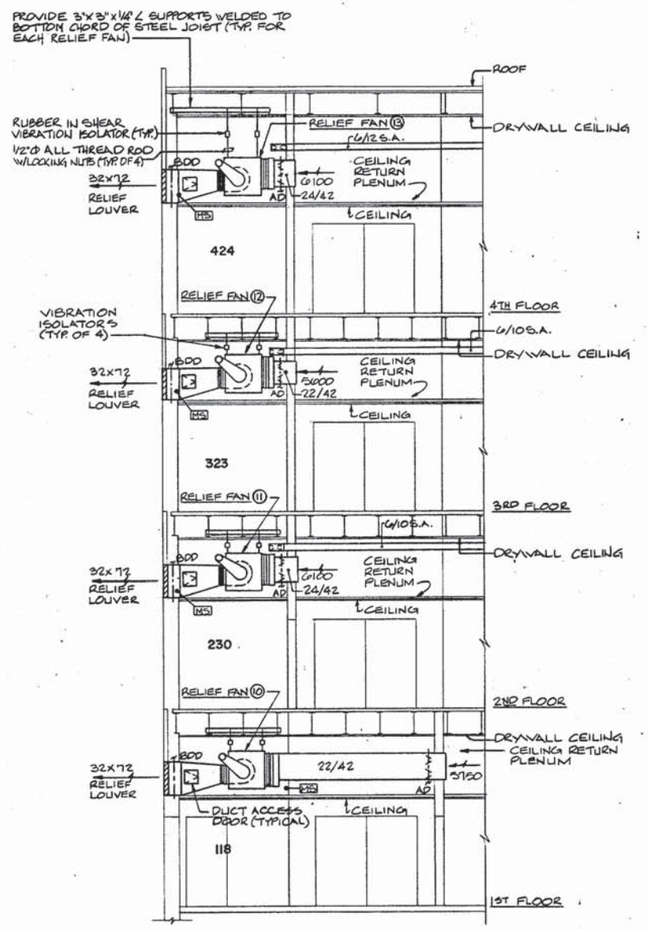

SECTION 1 M-3/M-7
SCALE 1/4" = 1'-0"
M-5, M-7, M-9

GRAPHIC SCALE
1/8" = 1'-0" 0 5 10 20 30
1/4" = 1'-0" 0 1 2 3 4 5 10 15
3/8" = 1'-0" 0 1 2 3 4 5 10

REVISIONS			
SYM.	DESCRIPTION	DATE	APPROVED

M-7

BOWMAN AND ASSOCIATES, P.C.
Consulting Engineers
5648 SOUTHERN BOULEVARD
VIRGINIA BEACH, VIRGINIA 23462

WALLER, TODD & SADLER ARCHITECTS, INC.
VIRGINIA BEACH VIRGINIA

DEPARTMENT OF THE NAVY — NAVAL FACILITIES ENGINEERING COMMAND
ATLANTIC DIVISION
NAVAL STATION NORFOLK, VA.

FLEET TRAINING CENTER
NORFOLK, VA

APPLIED ENGINEERING INSTRUCTION BUILDING
MECHANICAL THIRD FLOOR PLAN-AIR DISTRIBUTION

SIZE F | CODE IDENT. NO. 80091 | NAVFAC DRAWING NO. 4109612
CONSTR. CONTR. NO. N62460-83-B-3026
SCALE NOTED | SPEC. 05-83-3026 | SHEET 51 OF 70

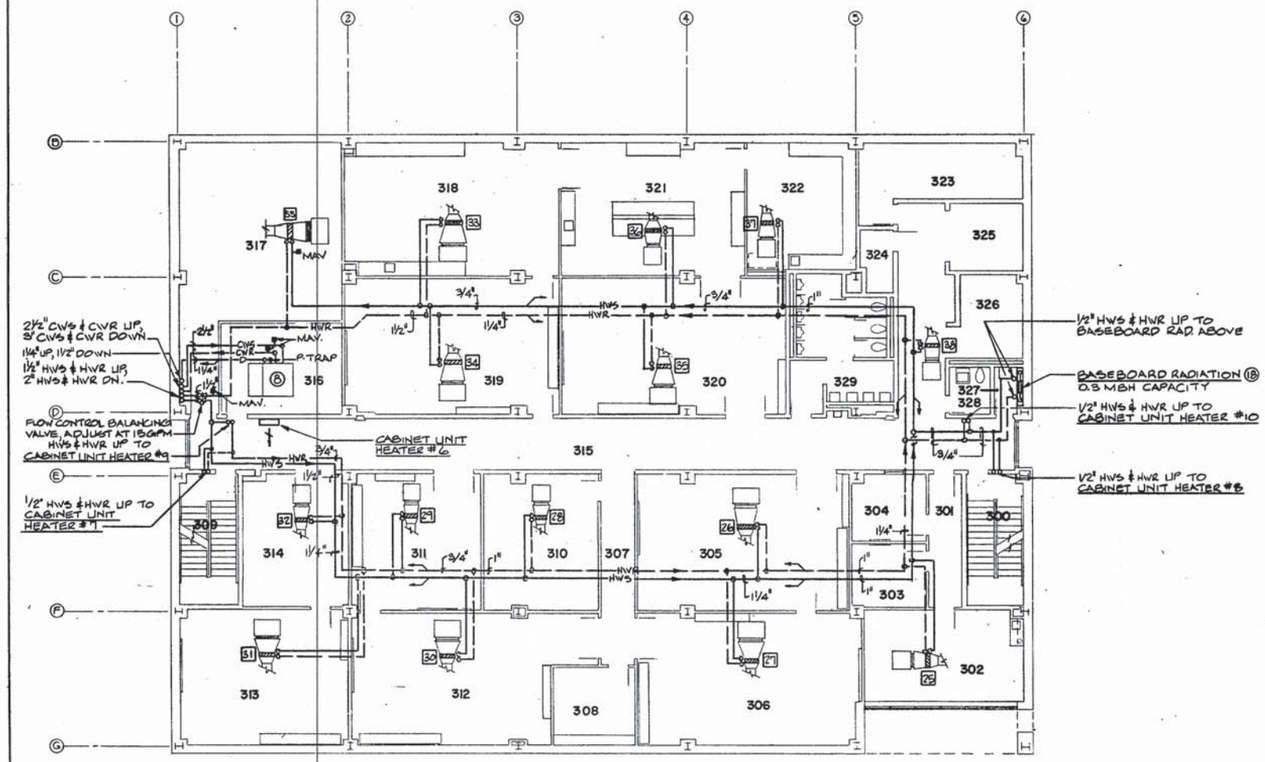

MECHANICAL THIRD FLOOR PLAN - PIPING
SCALE: 1/8" = 1'-0"

NOTE: ALL INDIVIDUAL PIPE RUNOUT SIZES TO H.W. COILS SHALL BE 3/4".

GRAPHIC SCALE
1/8" = 1'-0"
0 5 10 15 30

REVISIONS			
SYM.	DESCRIPTION	DATE	APPROVED

M-8

BOWMAN AND ASSOCIATES, P.C.
Consulting Engineers
5648 SOUTHERN BOULEVARD
VIRGINIA BEACH, VIRGINIA 23462

COMMONWEALTH OF VIRGINIA
RONALD D. FOSTER
No. 10316
83-1
PROFESSIONAL ENGINEER

WALLER, TODD & SADLER ARCHITECTS, INC.
VIRGINIA BEACH VIRGINIA

EFD DWG. NO. 209613
JOB ORDER NO. SF 3026
STA. PROJ. NO. P-157
DES. AJM DRWN. RER
PROJ. MGR. AJM CH. ARCH/ENGR. RDF
EFD RVD HWC P.P. TYPE
BR. MGR. JHW DES. DIR. KD
APPROVED DATE 9-25-84
ACTIVITY-SATISFACTORY TO
APPROVED DATE 27 OCT 1984
FOR EFD FOR COMMANDER NAVFAC

DEPARTMENT OF THE NAVY — NAVAL FACILITIES ENGINEERING COMMAND
ATLANTIC DIVISION
NAVAL STATION NORFOLK, VA.

FLEET TRAINING CENTER
NORFOLK, VA.

APPLIED ENGINEERING INSTRUCTION BUILDING
MECHANICAL THIRD FLOOR PLAN - PIPING

SIZE F | CODE IDENT. NO. 80091 | NAVFAC DRAWING NO. 410963
CONSTR. CONTR. NO. N62460-83-B-3026
SCALE NOTED | SPEC. 05-83-3026 | SHEET 52 OF 70

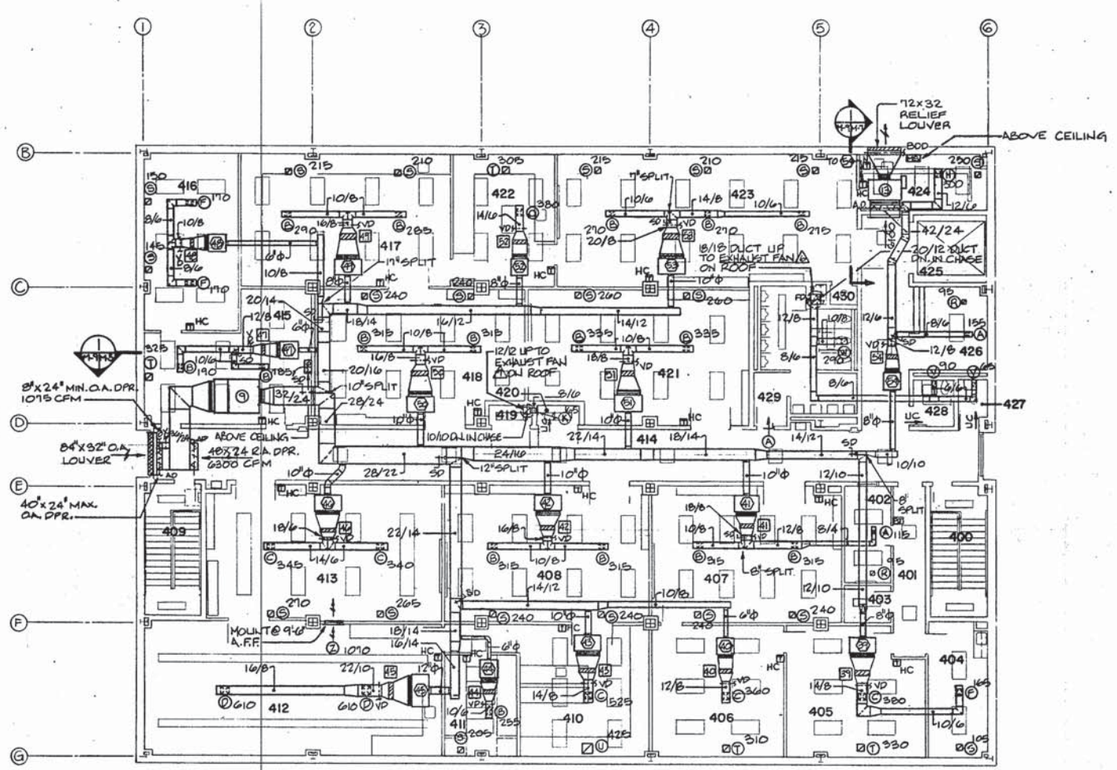

MECHANICAL FOURTH FLOOR PLAN—AIR DISTRIBUTION
SCALE: 1/8"=1'-0"

REVISIONS			
SYM.	DESCRIPTION	DATE	APPROVED

GRAPHIC SCALE
1/8"=1'-0" 0 5 10 20 30

M-9

BOWMAN AND ASSOCIATES, P.C.
Consulting Engineers
5648 SOUTHERN BOULEVARD
VIRGINIA BEACH, VIRGINIA 23462

COMMONWEALTH OF VIRGINIA
RONALD D. FOSTER
No. 10316
83-1
PROFESSIONAL ENGINEER

WALLER, TODD & SADLER
ARCHITECTS, INC.
VIRGINIA BEACH VIRGINIA

BFD DWG. NO. 209614
JOB ORDER NO. SF 3026
STA. PROJ. NO. P-157
DES. AJM DRWN. RER
PROJ. MGR. AJM CH. ARCH/ENGR. RDF
BFD RVD HWC P.P. TTRC
BR. MGR. GHW DES. DIR. KD
APPROVED DATE 9-25-84
ACTIVITY-SATISFACTORY TO
APPROVED DATE 27 OCT 1984
FOR BFD FOR COMMANDER NAVFAC

DEPARTMENT OF THE NAVY NAVAL FACILITIES ENGINEERING COMMAND
ATLANTIC DIVISION
NAVAL STATION NORFOLK, VA.

FLEET TRAINING CENTER
NORFOLK, VA

APPLIED ENGINEERING
INSTRUCTION BUILDING
MECHANICAL FOURTH FLOOR PLAN-AIR DISTRIBUTION

SIZE	CODE IDENT. NO.	NAVFAC DRAWING NO.
F	80091	4109614
		CONSTR. CONTR. NO. N62460-83-B-3026
SCALE NOTED	SPEC. 05-83-3026	SHEET 53 OF 70

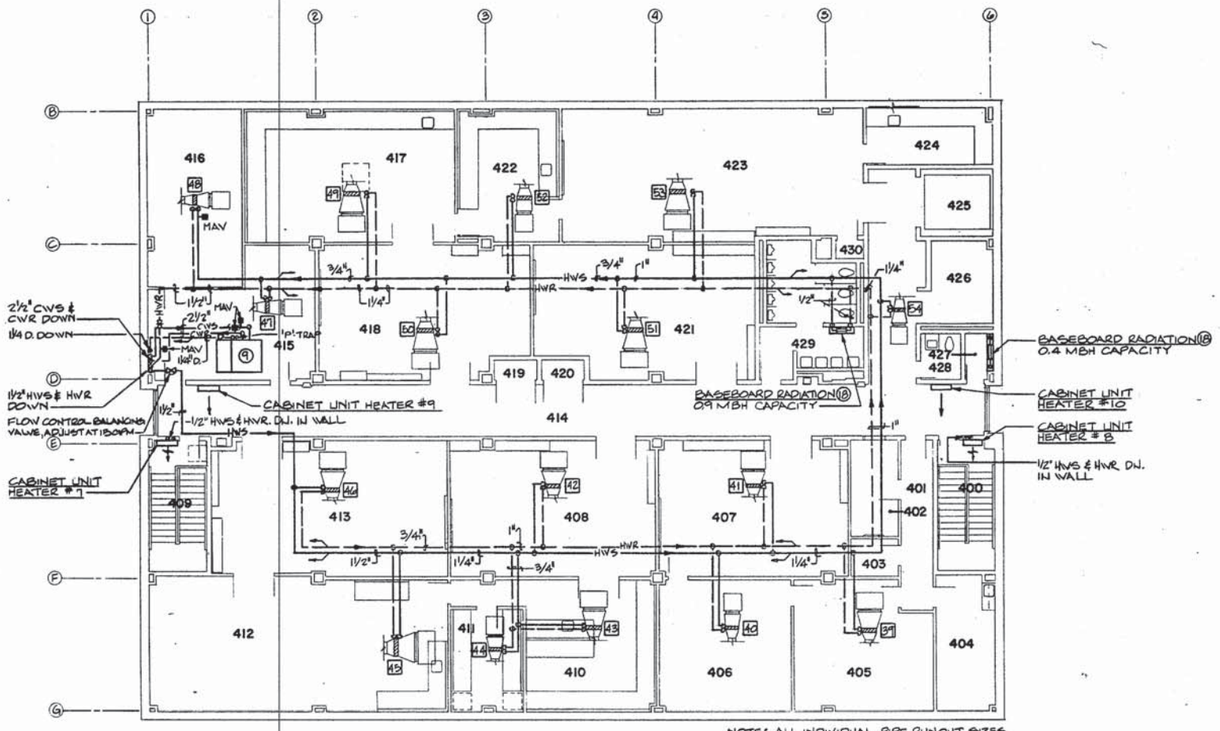

NOTE: ALL INDIVIDUAL PIPE RUNOUT SIZES TO H.W. COILS SHALL BE 3/4"

MECHANICAL FOURTH FLOOR PLAN-PIPING
SCALE: 1/8"=1'-0"

GRAPHIC SCALE
1/8"=1'-0" 0 5 10 15 30

REVISIONS			
SYM.	DESCRIPTION	DATE	APPROVED

M-10

BOWMAN AND ASSOCIATES, P.C.
Consulting Engineers
5448 SOUTHERN BOULEVARD
VIRGINIA BEACH, VIRGINIA 23462

COMMONWEALTH OF VIRGINIA
RONALD B. FOSTER
No. 10316
83-1
PROFESSIONAL ENGINEER

WALLER, TODD & SADLER ARCHITECTS, INC.
VIRGINIA BEACH VIRGINIA

SFD DWG. NO. 20965
JOB ORDER NO. SF 3026
STA. PROJ. NO. P-157
DES. AJM DRWN. RER
PROJ. MGR. AJM CH. ARCH/ENGR. RDF
SFD RVD Hwr P.P. MAK
DR. MGR. BHW DES. DIR. KT
APPROVED DATE 9-25-84
ACTIVITY-SATISFACTORY TO
APPROVED DATE 1 OCT 1984
FOR SFD FOR COMMANDER NAVFAC

DEPARTMENT OF THE NAVY NAVAL FACILITIES ENGINEERING COMMAND
ATLANTIC DIVISION
NAVAL STATION NORFOLK, VA.

FLEET TRAINING CENTER
NORFOLK, VA.

APPLIED ENGINEERING INSTRUCTION BUILDING
MECHANICAL FOURTH FLOOR PLAN - PIPING

SIZE F | CODE IDENT. NO. 80091 | NAVFAC DRAWING NO. 40965
CONSTR. CONTR. NO. N62460-83-B-3026
SCALE NOTED | SPEC. 05-83-3026 | SHEET 54 OF 70

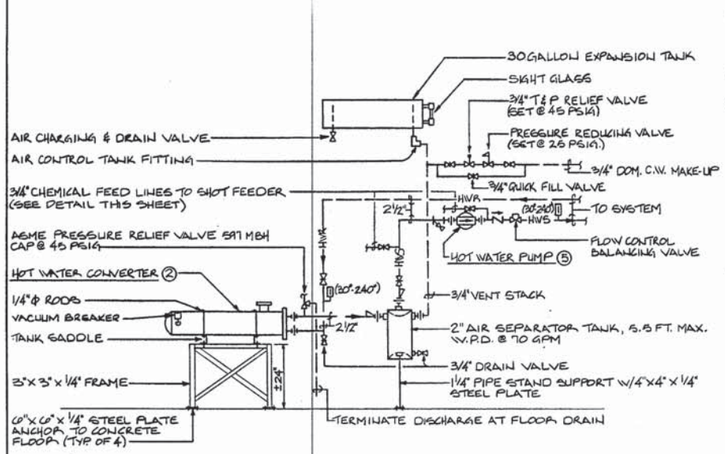

HOT WATER CONVERTER PIPING DIAGRAM

NO SCALE

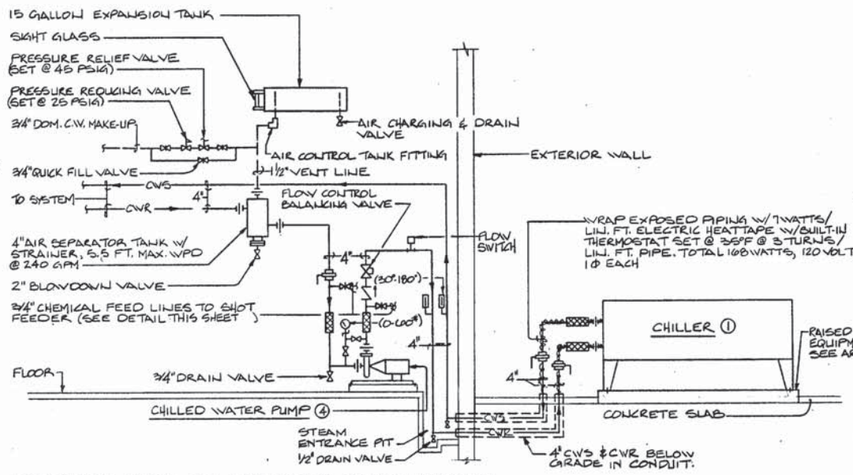

EQUIPMENT ROOM CHILLED WATER PIPING DIAGRAM

NO SCALE

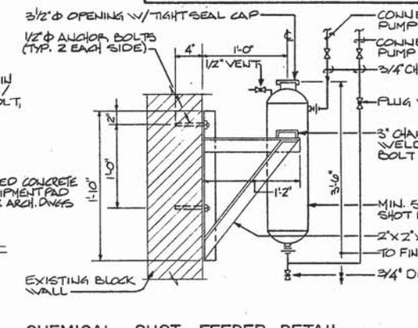

CHEMICAL SHOT FEEDER DETAIL

NO SCALE

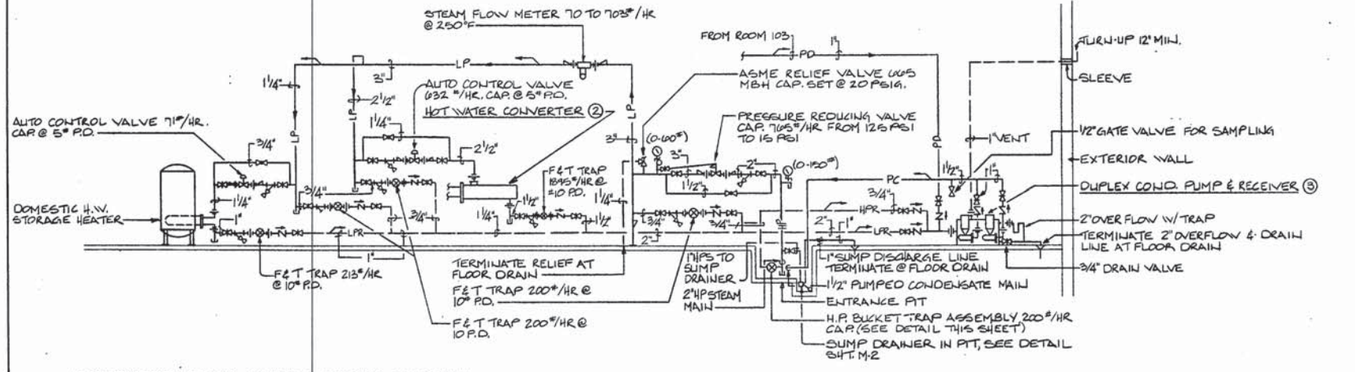

EQUIPMENT ROOM STEAM PIPING DIAGRAM

NO SCALE

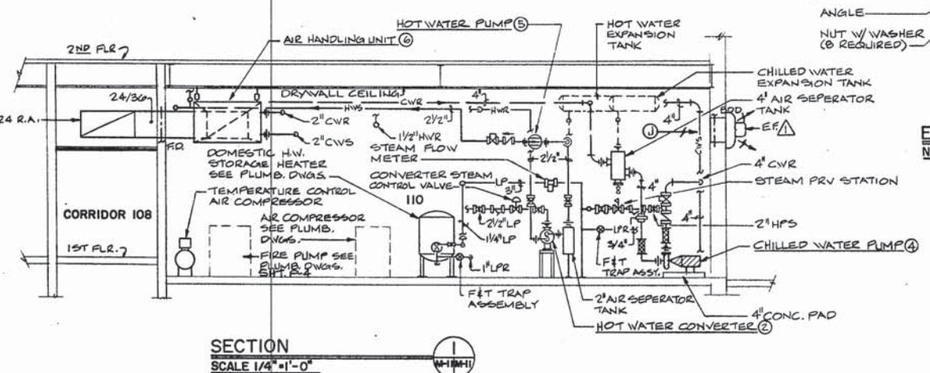

SECTION

SCALE 1/4" = 1'-0"

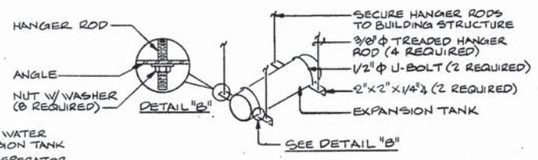

EXPANSION TANK SUPPORT DETAIL

NO SCALE

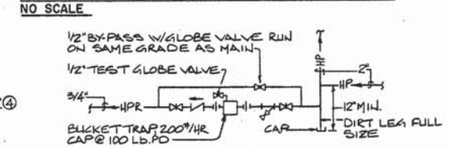

HIGH PRESSURE DRIP TRAP DETAIL

NO SCALE

GRAPHIC SCALE

0 1 2 3 4 5 10 15

1/4" = 1'-0"

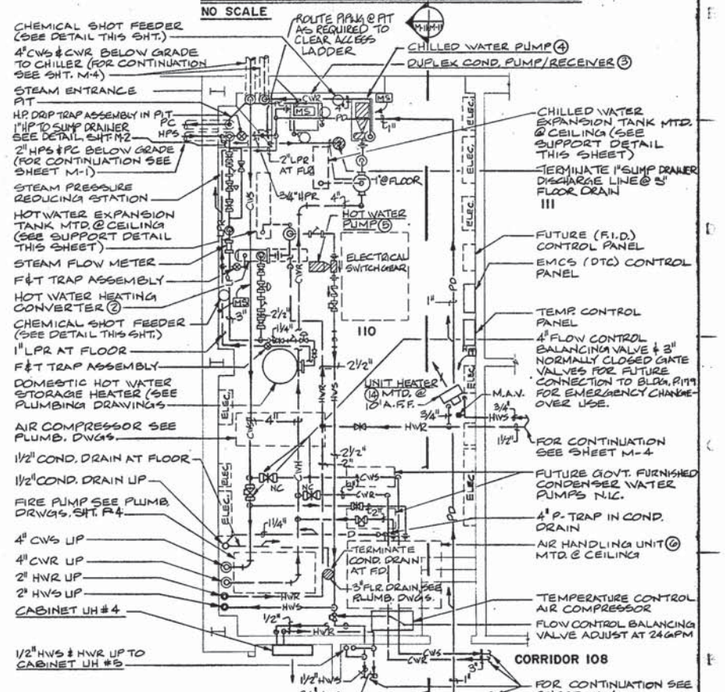

MECHANICAL EQUIPMENT ROOM PLAN

SCALE 1/4" = 1'-0"

REVISIONS			
SYM.	DESCRIPTION	DATE	APPROVED

M-11

BOWMAN AND ASSOCIATES, P.C. Consulting Engineers 8448 SOUTHERN BOULEVARD VIRGINIA BEACH, VIRGINIA 23462

COMMONWEALTH OF VIRGINIA — DONALD B. POTTS — REG. NO. 10316 — 83-1 — PROFESSIONAL ENGINEER

WALLER, TODD & SADLER ARCHITECTS, INC. VIRGINIA BEACH VIRGINIA

DEPARTMENT OF THE NAVY — NAVAL FACILITIES ENGINEERING COMMAND
ATLANTIC DIVISION
NAVAL STATION — NORFOLK, VA.

FLEET TRAINING CENTER
NORFOLK, VA

APPLIED ENGINEERING INSTRUCTION BUILDING
MECHANICAL DETAILS & DIAGRAMS

BPD DWG. NO. 209616	JOB ORDER NO. SF 3026		
STA. PROJ. NO. P-157			
DES. AJM	DRWN. JBW		
PROJ. MGR. AJM	CH. ARCH/ENGR. RDP		
BPD RVD 11/4/82	P.P. 7/7/82		
BR. MGR. 11/4/82	DES. DIR. KTS		
APPROVED	DATE 9.25.84		
ACTIVITY-SATISFACTORY TO			
APPROVED FOR BPD FOR CONSTRUCTION BY NAVFAC	DATE 10-16-85		
SIZE F	CODE IDENT. NO. 80091	NAVFAC DRAWING NO. 407095	
SCALE NOTED	SPEC. 05-83-3026	CONSTR. CONTR. NO. N62460-83-B-3026	SHEET 55 OF 70

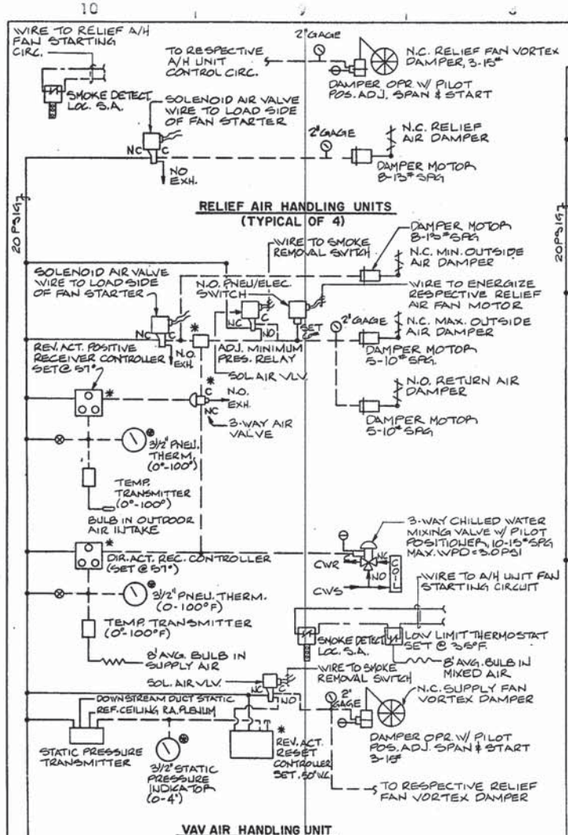

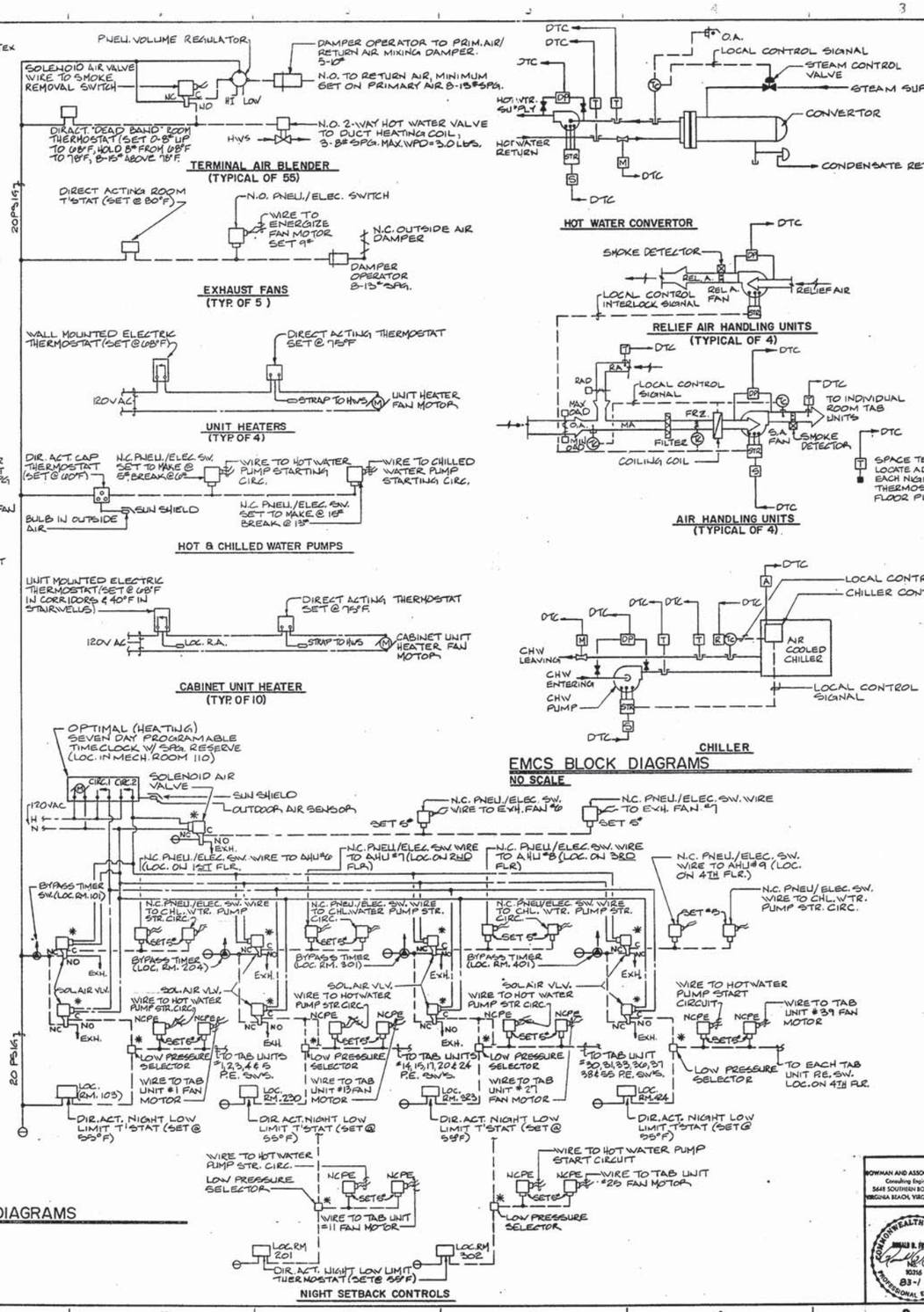

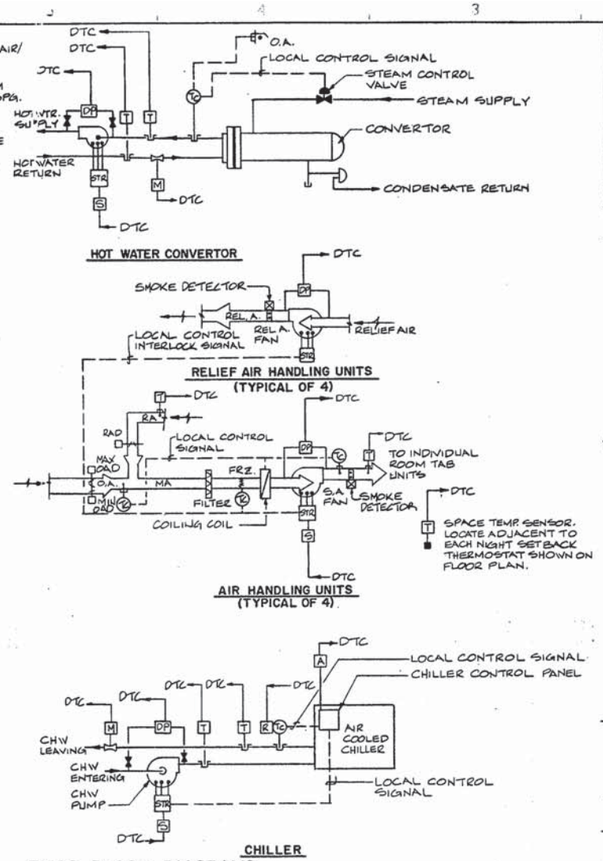

REVISIONS			
SYM.	DESCRIPTION	DATE	APPROVED

EMCS SYMBOLS

- DTC — SIGNAL TRANSMITTED TO DTC.
- DTC — SIGNAL RECEIVED FROM DTC.
- A — ALARM CONTACT SIGNAL.
- I — LOCAL CONTROL INTERRUPTION INTERFACE
- DP — DIFFERENTIAL PRESSURE SWITCH STATUS SIGNAL
- R — CONTROLLER RESET INTERFACE
- S — START/STOP INTERFACE
- T — TEMPERATURE CONTROLLER
- MS — MOTOR STARTER
- SENSOR INSTALLED IN THERMOMETER WELL.
- SENSOR INSTALLED IN DUCT OR PLENUM.
- CHW — CHILLED WATER
- REL.A. — RELIEF AIR
- EAD — EXHAUST AIR DAMPER
- HW — HOT WATER
- MA — MIXED AIR
- OA — OUTSIDE AIR
- OAD — OUTSIDE AIR DAMPER
- RA — RETURN AIR
- SA — SUPPLY AIR
- T — TEMPERATURE SENSOR
- DTC — DATA TERMINAL CONNECTION CABINET
- ISOLATION VALVE
- LOCAL CONTROL SIGNAL
- INDICATES ITEM INSTALLED ON FACE OF CONTROL CABINET
- * — INDICATES ITEM INSTALLED WITHIN CONTROL CABINET
- ⊖ — MAIN AIR SIGNAL, 20 PSIG
- ELECTRIC WIRING
- SMOKE DETECTOR
- C — COMMON
- NO — NORMALLY OPEN
- NC — NORMALLY CLOSED
- REV. ACT. — REVERSE ACTING
- DIR. ACT. — DIRECT ACTING
- EXH. — EXHAUST
- REC. — RECEIVER
- RAD — RETURN AIR DAMPER
- WPD — WATER PRESSURE DROP
- ENERGY METER
- M — METER SIGNAL

M-12

BOWMAN AND ASSOCIATES, P.C. Consulting Engineers 5648 SOUTHERN BOULEVARD VIRGINIA BEACH, VIRGINIA 23462

WALLER, TODD & SADLER ARCHITECTS, INC. VIRGINIA BEACH VIRGINIA

COMMONWEALTH OF VIRGINIA — DONALD B. SMITH — No. 10316 — PROFESSIONAL ENGINEER

DEPARTMENT OF THE NAVY — NAVAL FACILITIES ENGINEERING COMMAND
ATLANTIC DIVISION
NAVAL STATION — NORFOLK, VA.

FLEET TRAINING CENTER
NORFOLK, VA

APPLIED ENGINEERING INSTRUCTION BUILDING
MECHANICAL TEMPERATURE CONTROL DIAGRAMS

SPD DWG. NO.	20960
FOB ORDER NO.	SF 3026
STA. PROJ. NO.	P-157
DES. AJM	DRWN. RER
PROJ. MGR. AJM	CH. ARCH/ENGR. RDF
SPD RVD	FX.
SR. MGR.	DES. DIR.
APPROVED	DATE 9-25-84
ACTIVITY-SATISFACTORY TO	
APPROVED	DATE 17 OCT 1984
FOR SPD FOR COMMANDER NAVFAC	

SIZE F — CODE IDENT. NO. 80091 — NAVFAC DRAWING NO. 4109617
CONSTR. CONTR. NO. N62460-83-B-3026
SCALE NONE — SPEC. 05-83-3026 — SHEET 56 OF 70

MECHANICAL EQUIPMENT SCHEDULE

① AIR COOLED PACKAGED CHILLER - CAPACITY 94.5 TONS W/ 240 GPM ENT. AT 53.5°F & LVG. AT 44°F W/ 91.0°F D.B. AIR ENT. CONDENSER. CHILLER WATER P.D. = 12.0 FT. MAX. COMPRESSOR INPUT = 95.7 KW, 460 VOLTS, 60 HZ, 3 PH. CONDENSER FANS-(3) 7½ H.P., 460 VOLTS, 60 HZ, 3 PH. 610 RPM 11.0 FLA. EA. TOTAL ELECTRIC LOAD-193 FLA, 460 VOLTS, 60 HZ, 3 PH. CHILLER FOULING FACTOR OF .0005, 4 STEPS CAPACITY REDUCTION.

② HOT WATER HEATING CONVERTER - CAPACITY 602.1 MBH W/ 70 GPM ENT. AT 122.8°F & LVG. AT 140°F W/ 632 LBS./HR. STEAM ENT. AT 10 PSIG. MAX. WATER P.D. 1.0 FT. MIN. 13 SQ. FT. HEATING SURFACE, NOMINAL 8"Ø × 29" LENGTH, .0005 FOULING FACTOR ALLOWANCE.

③ DUPLEX CONDENSATE PUMP & RECEIVER - 8000 SQ. FT. EDR CAPACITY W/(2) PUMPS AT 12 GPM AT 20 PSI DISCHARGE HEAD, 1/3 H.P., 120 VOLTS, 60 HZ, 1 PH., 3500 RPM EACH. MINIMUM RECEIVER CAPACITY 23 GALLONS. PROVIDE COMPLETE MECHANICAL ALTERNATOR & 2 POLE, SIZE 00, NEMA I MOTOR STARTERS.

④ CHILLED WATER PUMP - CAPACITY 240 GPM AT 50 FT. HEAD, 5 HP, 460 VOLTS, 60 HZ, 3 PH., 1750 RPM. MOTOR STARTER - 3 POLE, SIZE 0, NEMA-1.

⑤ HOT WATER PUMP - CAPACITY 70 GPM AT 35 FT. HEAD, 1½ H.P., 460 VOLTS, 60 HZ, 3 PH., 1750 RPM. MOTOR STARTER - 3 POLE, SIZE 00, NEMA-1.

⑥ AIR HANDLING UNIT - FAN CAPACITY 7050 CFM AT 1.50" TSP, 656 RPM, 5 HP, 460 VOLTS, 60 HZ, 3 PH. COOLING COIL CAPACITY 177.8 MBH SENS. & 242.4 MBH TOTAL W/AIR ENT. AT 80.4°F D.B. & 66.6°F W.B. & LEAVING AT 57.3°F D.B. & 55.6°F W.B. W/ 48.3 GPM CHILLED WATER ENT. AT 45°F & LVG. AT 55.0°F. MAX. COIL AIR FRICTION .44"WC, MAX. COIL WATER PRESSURE DROP 4.5 FT. MIN. FILTER AREA 20.1 SQ. FT. W/ .15" WC AIR FRICTION. MOTOR STARTER 3 POLE, SIZE 0, NEMA-1 ENCLOSURE.

⑦ AIR HANDLING UNIT - FAN CAPACITY 7400 CFM AT 1.75" TSP, 713 RPM, 5 H.P. 460 VOLTS, 60 HZ, 3 PH. COOLING COIL CAPACITY 213.5 MBH SENS. & 287.4 MBH TOTAL W/AIR ENT. AT 83.6°F D.B. & 68.2°F W.B. & LEAVING AT 57.2°F D.B. & 55.7°F W.B. W/ 57.4 GPM CHILLED WATER ENT. AT 45°F & LVG. AT 55.0°F. MAX. COIL AIR FRICTION .49"WC, MAX. COIL WATER PRESSURE DROP 6.1 FT. MIN. FILTER AREA 21.1 SQ. FT. W/ .16" WC AIR FRICTION. MOTOR STARTER 3 POLE, SIZE 0 W/ NEMA-1 ENCLOSURE.

⑧ AIR HANDLING UNIT - FAN CAPACITY 6850 CFM AT 1.75" TSP, 695 RPM, 5 H.P. 460 VOLTS, 60 HZ, 3 PH. COOLING COIL CAPACITY 217.1 MBH SENS. & 311.2 MBH TOTAL W/AIR ENT. AT 86.3°F D.B. & 69.3°F W.B. & LEAVING AT 57.2°F D.B. & 54.9°F W.B. W/ 62.2 GPM CHILLED WATER ENT. AT 45°F & LVG. AT 55.0°F. MAX. COIL AIR FRICTION .67"WC, MAX. COIL WATER PRESSURE DROP 7.1 FT. MIN. FILTER AREA 19.6 SQ. FT. W/ .14" WC AIR FRICTION. MOTOR STARTER 3 POLE, SIZE 0 W/ NEMA 1 ENCLOSURE.

⑨ AIR HANDLING UNIT - FAN CAPACITY 7375 CFM AT 1.75" TSP, 712 RPM, 5 HP 460 VOLTS, 60 HZ, 3 PH. COOLING COIL CAPACITY 246.4 MBH SENS. & 339.2 MBH TOTAL W/AIR ENT. AT 87.7°F D.B. & 69.4°F W.B. & LEAVING AT 57.1°F D.B. & 54.8°F W.B. W/ 67.7 GPM CHILLED WATER ENT. AT 45°F & LVG. AT 55.0°F. MAX. COIL AIR FRICTION .59"WC, MAX. COIL WATER PRESSURE DROP 11.8 FT. MIN. FILTER AREA 21.0 SQ. FT. W/ .16" WC AIR FRICTION. MOTOR STARTER 3 POLE, SIZE 0 W/ NEMA I ENCLOSURE.

⑩ RELIEF AIR HANDLER — CAPACITY 5750 CFM AT .250" E.S.P. 495 RPM, 1½ H.P., 460 VOLTS, 60 HZ, 3 PH., 1750 RPM MOTOR, 1091 FPM MAX. OUTLET VELOCITY. MOTOR STARTER, 3 POLE, SIZE 00, NEMA I ENCLOSURE.

⑪ RELIEF AIR HANDLER — CAPACITY 6100 CFM AT .250" E.S.P. 515 RPM, 2.0 H.P., 460 VOLTS, 60 HZ, 3 PH., 1750 RPM MOTOR, 1794 FPM MAX. OUTLET VELOCITY. MOTOR STARTER, 3 POLE, SIZE 00, NEMA I ENCLOSURE.

⑫ RELIEF AIR HANDLER — CAPACITY 5000 CFM AT .250" E.S.P. 475 RPM, 1½ H.P., 460 VOLTS, 60 HZ, 3 PH., 1750 RPM MOTOR, 1647 FPM MAX. OUTLET VELOCITY. MOTOR STARTER, 3 POLE, SIZE 00, NEMA I ENCLOSURE.

⑬ RELIEF AIR HANDLER — CAPACITY 6100 CFM AT .250" E.S.P., 510 RPM, 2.0 H.P., 460 VOLTS, 60 HZ, 3 PH., 1750 RPM MOTOR, 1794 FPM MAX. OUTLET VELOCITY. MOTOR STARTER, 3 POLE, SIZE 00, NEMA I ENCLOSURE.

⑭ UNIT HEATER - HORIZONTAL BLOW HOT WATER UNIT HEATER W/ CAPACITY OF 9.0 MBH WHEN SUPPLIED WITH 1.3 GPM HOT WATER ENT. @ 140°F & LVG @ 126.1 F., .03 FT. WATER PRESSURE DROP, 590 CFM ENT. @ 50°F., 1/20 HP, 120 VOLTS, 60 HZ, 1 PH., 1550 RPM. MOTOR, 25 FT. MIN. AIR THROW, MOUNTING HEIGHT = 9.0 FT.

⑮ UNIT HEATER - HORIZONTAL BLOW HOT WATER UNIT HEATER W/ CAPACITY OF 21.2 MBH WHEN SUPPLIED WITH 4.0 GPM HOT WATER ENT. @ 140°F & LVG @ 129.4 F., 0.3 FT. WATER PRESSURE DROP, 1100 CFM ENT. @ 68°F., 1/8 H.P., 120 VOLTS, 60 HZ, 1 PH., 1550 R.P.M. MOTOR, 35 FT. MIN. AIR THROW, MOUNTING HEIGHT = 10 FT.

⑯ & ⑰ UNIT HEATER - HORIZONTAL BLOW HOT WATER UNIT HEATER W/ CAPACITY OF 37.1 MBH WHEN SUPPLIED WITH 3.4 GPM HOT WATER ENT. @ 140°F. & LVG @ 118.1 F., 0.31 FT. WATER PRESSURE DROP, 1760 CFM ENT. @ 68°F., 1/6 H.P., 120 VOLTS, 60 HZ, 1 PH., 1100 RPM MOTOR, 32 FT. MIN. AIR THROW, MOUNTING HEIGHT = 10 FT.

⑱ BASEBOARD RADIATION - CAPACITY 400 BTU/LIN. FT. ELEMENT W/AIR ENT. @ 68°F., AND 0.5 GPM HOT WATER ENT. @ 140°F., WITH 0.5 FPM WATER VELOCITY. TOTAL LENGTH OF ELEMENT SHALL BE AS REQUIRED TO MATCH CAPACITY INDICATED. SEE BASEBOARD RADIATION DETAIL, SHT. M-6 FOR ADDITIONAL INFORMATION.

⑲ WELDING FUME EXHAUST SYSTEM - TWO STATION SYSTEM TO EXHAUST 700 CFM @ 5.0" TSP W/ 1.0 HP 460V, 60HZ, 3PH, 3500 RPM DIRECT DRIVE INDUSTRIAL EXHAUST FAN. EACH OUTLET STATION INLET HOOD SHALL BE CAPABLE OF BENDING SMOKE FUSES @ 12 INCHES FROM HOOD W/ 350 CFM AIR FLOW. PROVIDE COMPLETE W/ WELDPROOF FLEXIBLE TUBING, SCREENED INLET HOOD. EXHAUST FAN W/ WALL MOUNTING SUPPORT PLATFORM, VIBRATION ISOLATORS, FLEXIBLE TUBING SUSPENSION SYSTEM, & SP, SIZE 00, NEMA-1 MOTOR STARTER W/ ON-OFF PUSHBUTTONS AND "ON" INDICATION LIGHT.

EXHAUST FAN SCHEDULE

UNIT NO.	CFM	E.S.P. "WC.	DRIVE	FAN RPM	MAX. T.S. FPM	MOTOR H.P.	REMARKS
1	1650	.100	DIRECT	1140	4195	1/4	WALL MOUNTED CENTRIFUGAL
2	2670	.125	BELT	525	3430	1/4	ROOF MOUNTED AXIAL BLADE
3	1900			840	3960	1/6	
4	1900		↓	840	3960	1/6	↓
5	915	↓	DIRECT	860	3165	1/8	WALL MOUNTED CENTRIFUGAL
6	1840	.250	BELT	670	3115	1/6	ROOF MOUNTED CENTRIFUGAL
7	660		↓	920	2830	1/6	↓

NOTES:
1. ALL FANS SHALL BE FURNISHED WITH BUILT-IN DISCONNECT SWITCH AND GRAVITY BACKDRAFT DAMPERS.
2. PROVIDE FRACTIONAL HORSEPOWER 120 VOLT MOTOR STARTERS.
3. ALL MOTORS SHALL BE 120 VOLTS, 60 HZ, 1 PH.

TERMINAL AIR BLENDER UNIT SCHEDULE TAB/VAV

UNIT NO.	ROOM NO.	FAN CAPACITY PRIMARY CFM	FAN CAPACITY E.S.P. "WC	FAN MOTOR WATTS	FAN MOTOR RPM	VOL. REG. CFM MIN.	VOL. REG. CFM MAX.	INLET SIZE
1	102	390	.20	200	1200	95	210	6"Ø
2	103	1335		510	900	80	1335	12"Ø
3	104	855		350	↓	125	855	10"Ø
4	105	1280	.30"	510		160	1200	12"Ø
5	106	1000	.20"	350	1100	60	1000	↓
6	107	1360	.25"	510	1600	40	1360	12"Ø
7	111	1380	.20"	510	900	50	1380	12"Ø
8	112	480		200	1600	↓	480	8"Ø
9	113	1340	.25"	510	1100	160	1250	12"Ø
10	113	335		200	1200	50	315	6"Ø
11	201	425	.30"		1600	40	425	8"Ø
12	205	470	.25"	↓	↓	60	275	6"Ø
13	208	595	.20"	350	900	75	490	8"Ø
14	211	900		↓	↓	150	855	10"Ø
15	212	450		200	1600	100	400	8"Ø
16	213						420	
17	214	↓				↓	435	↓
18	215	340		↓	1200	50	340	6"Ø
19	217	1160		350	1100	85	1160	12"Ø
20	232	1470		510		95	1470	
21	218	1320		↓		165	1065	↓
22	225	575		350	1600	115	445	8"Ø
23	222	500	↓	200		100	500	
24	230	345	.25"		1200	80	345	6"Ø
25	302	455	.20"	↓	1600	100	455	8"Ø
26	305	805	.25"	350	900	190	760	10"Ø
27	306	625	↓	↓	↓	150	625	↓
28	310	320	.20"	200	1200	50	320	6"Ø
29	311	410	↓	↓	↓	100	410	8"Ø
30	312	700	.25"	350	900	150	650	10"Ø
31	313	585		↓	↓	↓	585	8"Ø
32	314	335		200	1200	50	335	6"Ø
33	318	575		350	900	100	525	10"Ø
34	319	820				180	790	
35	320	635	↓	↓	↓	150	635	↓
36	321	525	.20"	200	1600	100	525	8"Ø
37	322	405				75	405	
38	323	395		↓	↓	90	395	
39	405	545		350	900	110	505	↓
40	406	360	↓	200	1200	50	315	6"Ø
41	407	745	.25"	350	900	170	745	10"Ø
42	408	630	↓			150	630	
43	410	525	.20"	↓	↓	100	525	↓
44	411	255		200	1200	50	255	6"Ø
45	412	1220		510	1100	150	1220	12"Ø
46	413	685		350	900	↓	685	10"Ø
47	415	375		200	1200	50	330	6"Ø
48	416	340	↓	↓	↓	45	285	↓
49	417	575	.25"	350	900	150	565	8"Ø
50	418	630					630	10"Ø
51	421	670	↓	↓	↓	↓	670	↓
52	422	380	.20"	200	1200	75	380	8"Ø
53	423	815		350	900	175	815	10"Ø
54	424	455	↓	200	1600	110	455	8"Ø
55	317	660	.25"	350	900	100	490	10"Ø

NOTES:
1. ALL MOTORS SHALL BE 277 VOLTS, 60 HZ, 1 PH.

HEATING COIL SCHEDULE

UNIT NO.	ROOM NO.	NOMINAL SIZE	CFM	CAPACITY MBH	E.A.T. °F	L.A.T. °F	AIR P.D. "WC	GPM	WTR. P.D. FT. HD.	CONTROL VLV. Cv
1	102	21"×6"	390	8.8	66.8	87.5	.074	0.9	0.2	0.4
2	103	30"×14"	1335	9.6	65.2	71.8	↓	1.0	0.5	↓
3	104	30"×9"	855	10.5	65.1	76.3	.078	1.0	0.4	0.4
4	105	30"×12"	1280	14.7	64.9	75.4	.096	1.4	1.1	0.5
5	106	30"×9"	1000	8.9	65.0	73.1	.102	0.9	0.4	0.4
6	107	30"×14"	1360	3.8	↓	68.5	.015	0.5	0.2	0.2
7	111	30"×14"	1380	5.9	65.1	69.0	.075	0.6	0.1	
8	112	24"×6"	480	5.6	65.3	76.0	.083	↓	↓	↓
9	113	30"×14"	1340	13.1	65.4	74.4	.071	1.3	1.1	0.5
10	113	18"×6"	335	3.3	↓	↓	.074	0.5	0.1	0.2
11	201	24"×6"	425	8.5	63.7	103.9	.072	0.9	0.3	0.3
12	205	24"×6"	470	3.9	65.9	73.7	.080	0.5	0.1	0.2
13	208	30"×6"	595	8.4	66.4	79.9	.083	0.8	0.2	0.3
14	211	30"×9"	900	10.0	63.5	73.7	.084	1.0	0.4	0.4
15	212	24"×6"	450	7.1	64.1	78.6	.074	0.7	0.2	0.3
16	213			5.9	63.9	75.9		0.6	0.1	0.2
17	214	↓	↓	8.0	63.7	80.0	↓	0.8	0.2	0.3
18	215	18"×6"	340	2.9	63.3	71.1	.076	0.5	0.1	0.2
19	217	30"×12"	1160	5.0	63.1	68.0	.082	0.5	0.2	↓
20	232	30"×14"	1470	10.1	63.3	69.9	.083	1.0	0.5	0.4
21	218	↓	1320	9.7	64.5	71.2	.071	↓	↓	↓
22	225	30"×6"	575	6.8	65.1	75.9	.078	0.7	0.2	0.3
23	222	24"×6"	500	6.1	63.4	74.6	.090	0.6	0.1	0.2
24	230	18"×6"	345	8.0	↓	84.6	.091	0.8	0.2	0.3
25	302	24"×6"	455	12.4	61.3	86.3	.076	1.2	0.4	0.5
26	305	27"×9"	805	11.2	61.6	74.3	.083	1.1	0.5	0.4
27	306	24"×9"	625	10.7	↓	77.2	.068	↓	↓	↓
28	310	18"×6"	320	2.9	61.3	69.6	↓	0.5	0.1	0.2
29	311	21"×6"	410	5.9	61.1	74.3	.080	↓	↓	↓
30	312	24"×9"	700	10.9	61.9	76.1	.081	1.1	0.5	0.4
31	313	30"×6"	585	↓	61.7	78.7	↓	↓	0.4	↓
32	314	18"×6"	335	2.9	61.3	69.2	.074	0.5	0.1	0.2
33	318	30"×6"	575	7.4	62.4	74.2	.078	0.7	0.2	0.3
34	319	30"×9"	820	10.6	61.4	73.2	.074	1.0	0.4	0.4
35	320	24"×9"	635	8.8	61.6	74.3	.068	0.9	0.3	0.3
36	321	30"×6"	525	7.2	61.2	73.7	↓	0.7	0.2	↓
37	322	21"×6"	405	5.2	61.6	73.3	.078	0.5	0.1	0.2
38	323	↓	395	8.9	↓	82.1	.076	0.9	0.2	0.3
39	405	27"×6"	545	10.4	61.9	79.4	.084	1.0	0.3	0.4
40	406	21"×6"	360	4.2	61.7	72.4	.065	0.5	0.1	0.2
41	407	27"×9"	745	10.5	60.8	73.7	.074	1.0	0.4	0.4
42	408	24"×9"	630	9.3	61.1	74.6	.068	0.9	0.3	0.3
43	410	27"×6"	525	7.2	61.4	73.9	.080	0.7	0.2	↓
44	411	15"×6"	255	3.6	61.2	74.1	.064	0.5	0.1	0.2
45	412	30"×12"	1220	15.6	60.9	72.6	.088	1.6	1.3	0.7
46	413	24"×9"	685	9.4	↓	73.2	.078	1.0	0.4	0.4
47	415	21"×6"	375	3.9	61.6	71.1	.069	0.5	1.1	0.2
48	416	18"×6"	340	4.9	62.1	75.1	.076	↓	↓	↓
49	417	30"×6"	575	10.9	61.3	78.6	.078	1.1	0.4	0.4
50	418	↓	630	9.3	61.1	74.6	.092	0.9	0.3	0.3
51	421	24"×9"	670	↓	61.0	73.7	.074	↓	↓	↓
52	422	21"×6"	380	5.4	60.6	73.6	.071	0.5	0.1	0.2
53	423	30"×9"	815	13.2	60.7	75.5	.073	1.3	0.7	0.5
54	424	24"×6"	455	10.0	60.9	80.8	.074	1.0	0.3	0.4
55	317	24"×9"	660	9.0	63.5	76.0	.071	0.9	0.3	0.3

NOTES:
1. CAPACITES BASED ON 140°F. ENTERING WATER TEMPERATURE.

GRILLE & DIFFUSER SCHEDULE

MARK	TYPE	SIZE	CFM	APPLICATION
A	EXPANDED CONE	6×6	AS NOTED	SQUARE CEILING DIFFUSER-4 WAY BLOW
B		9×9		
C		12×12		
D		15×15		
E		18×18		↓
F		6×9		RECTANGULAR CEILING DIFFUSER
G		6×12		
H		9×12		
I	↓	9×15		↓
J	HORIZONTAL FACE VANES	20×20		WALL EXHAUST GRILLE
K		8×6		WALL EXHAUST REGISTER
N		36×30		WALL TRANSFER GRILLE
O		48×32		↓
P		30×24		EXHAUST GRILLE
Q		24×24		↓
R		8×8		CEILING RETURN REGISTER
S		10×10		
T		12×12		
U		18×18		↓
V		6×6		CEILING EXHAUST REGISTER
W		10×10		↓
X		12×12		WALL RETURN REGISTER
Y		24×12		
Z		30×12		
ZI	↓	42×10		↓
A-L	SIGHT PROOF	18×18		DOOR LOUVER
B-L		18×12	↓	↓

NOTES:
1. ALL CEILING MOUNTED REGISTERS & DIFFUSERS SHALL HAVE BAKED OFF-WHITE ENAMEL FINISH.

CABINET UNIT HEATER SCHEDULE

UNIT NO.	SUPPLY CFM	CAPACITY MBH	E.A.T. °F	L.A.T. °F	GPM	L.W.T. °F	W.P.D. FT.	MOTOR WATTS	REMARKS
1	420	19.5	68°	110.8	2.0	120.5	1.28	110	VERTICAL FLOOR MOUNTED
2	220	9.6		108.2	1.0	120.8	0.24	95	
3	↓	7.3		98.6	0.75	120.5	0.15	↓	
4	300	12.7		107.0	1.0	114.6	0.28	135	
5	145	3.0		87.0	0.5	128.0	0.07	95	
6		↓		↓		↓			
7		1.5		77.5		134.0			
8		↓		↓		↓			
9		3.1		87.7		127.6			
10	↓	↓	↓	↓	↓	↓	↓	↓	↓

NOTES:
1. CAPACITIES BASED ON 140°F ENTERING WATER TEMPERATURE.
2. ALL MOTORS SHALL BE 120 VOLTS, 60 HZ, 1 PH., 1100 R.P.M.
3. UNITS SHALL INCLUDE FACTORY INSTALLED 3 SPEED FAN SWITCH & COIL MANUAL AIR VENTS.
4. UNITS NO. 5 THRU 10 SHALL OPERATE AT LOW SPEED OF 700 R.P.M.

REVISIONS

SYM.	DESCRIPTION	DATE	APPROVED

M-13

BOWMAN AND ASSOCIATES, P.C.
Consulting Engineers
5648 SOUTHERN BOULEVARD
VIRGINIA BEACH, VIRGINIA 23462

COMMONWEALTH OF VIRGINIA — DONALD D. TESTER — No. 10386 — 83-1 — PROFESSIONAL ENGINEER

WALLER, TODD & SADLER ARCHITECTS, INC.
VIRGINIA BEACH VIRGINIA

EFD DWG. NO. 209618
JOB ORDER NO. SF 3026
STA. PROJ. NO. P-157
DES. AJM DRWN. MLN
PROJ. MGR. AJM CH. ARCH/ENGR. RDF
EFD RVD HWX F.P. [illegible]
BR. MGR. GHW DES. DIR. KD
APPROVED [signature] DATE 9-25-84
ACTIVITY-SATISFACTORY TO
APPROVED [signature] DATE 12 OCT 1984
FOR EFD FOR COMMANDER NAVFAC

DEPARTMENT OF THE NAVY — NAVAL FACILITIES ENGINEERING COMMAND
ATLANTIC DIVISION
NAVAL STATION NORFOLK, VA.

FLEET TRAINING CENTER
NORFOLK, VA

APPLIED ENGINEERING INSTRUCTION BUILDING
MECHANICAL EQUIPMENT SCHEDULES

SIZE F | CODE IDENT. NO. 80091 | NAVFAC DRAWING NO. 4109618
CONSTR. CONTR. NO. N62460-83-B-3026
SCALE NONE | SPEC. 05-83-3026 | SHEET 57 OF 70

LEGEND

@	AT
[1]	CONSTRUCTION NOTE IDENTIFICATION
———	INDICATES EXISTING ITEM
———	INDICATES ITEM TO BE PROVIDED
- - - - - - - - -	INDICATES ITEM TO BE REMOVED
	CONNECT NEW TO EXISTING
[101]	ROOM NUMBER IDENTIFICATION
AFF	ABOVE FINISH FLOOR
DN	DOWN
DWG	DRAWING
TYP	TYPICAL
DIA	DIAMETER
GA	GAUGE
MISC	MISCELLANEOUS
NA	NOT APPLICABLE
	ACOUSTICALLY LINED DUCTWORK *ALL DIMENSIONS ARE CLEAR INSIDE DIMENSIONS
	CEILING RETURN, EXHAUST OR TRANSFER REGISTER
	CEILING SUPPLY DIFFUSER
	CONICAL TEE
	FLEXIBLE DUCT CONNECTION
	MITERED ELBOW WITH TURNING VANES
	RADIUS ELBOW
	RETURN/EXHAUST DUCT TURNING UP
	RETURN/EXHAUST DUCT TURNING DOWN
	SUPPLY DUCT TURNING UP (ROUND OR RECTANGULAR)
	SUPPLY DUCT TURNING DOWN (ROUND OR RECTANGULAR)
10X10	SQUARE OR RECTANGULAR DUCTWORK
	TAKEOFF WITH 45° THROAT
	VOLUME DAMPER
BD	BACKDRAFT DAMPER
FD	FIRE DAMPER
	INDICATES FLAT OVAL DUCTWORK
ø	INDICATES ROUND DUCTWORK
M	MOTORIZED CONTROL AIR DAMPER
	RETURN, EXHAUST OR TRANSFER AIR FLOW
	SUPPLY AIR FLOW
	AUTOMATIC AIR VENT
	BACKFLOW PREVENTER
	BOTTOM CONNECTION
	BUTTERFLY VALVE
	CAPPED PIPE
	CHECK VALVE
CO	CLEANOUT
	CONCENTRIC REDUCER
	DIRECTION OF FLOW
	ECCENTRIC REDUCER
	FLANGED CONNECTION (THIS NOT A UNION)
	FLEXIBLE CONNECTION
	GATE VALVE
	GLOBE VALVE
	BACK PRESSURE REGULATING VALVE (PROCESS COOLING WATER)
	MANUAL AIR VENT
	METERED BALANCING VALVE, WITH PRESSURE TAPS
PT	PRESSURE/TEMPERATURE TEST PLUG
	PLUG VALVE
	PIPE TURNING UP
	PIPE TURNING DOWN
	PITCH DOWN IN DIRECTION OF ARROW
	PRESSURE REDUCING VALVE
	PRESSURE RELIEF VALVE
	PRESSURE GAUGE WITH GAUGE COCK
	SQUARE HEAD COCK
	STEAM TRAP
	STRAINER
	STRAINER WITH BLOW-OFF VALVE
	SWING JOINT
	THREE-WAY CONTROL VALVE
	THERMOMETER
	TOP CONNECTION
	TWO-WAY CONTROL VALVE
	UNION
T	THERMOSTAT
—CWS—	CHILLED WATER SUPPLY
—CWR—	CHILLED WATER RETURN
—PCWS—	PROCESS COOLING WATER SUPPLY
—PCWR—	PROCESS COOLING WATER RETURN
	DIRECTION OF FLOW
	DOMESTIC COLD WATER
—D—	CONDENSATE DRAIN LINE
—HPS—	HIGH PRESSURE STEAM
—HPC—	HIGH PRESSURE CONDENSATE
—HWS—	HOT WATER SUPPLY
—HWR—	HOT WATER RETURN
—LPC—	LOW PRESSURE CONDENSATE
—LPS—	LOW PRESSURE STEAM
—V—	STEAM VENT LINE
	PIPING WITH ELECTRIC HEAT TAPE
AI	ANALOG INPUT (TO PANEL)
AO	ANALOG OUTPUT (OUT OF PANEL)
DI	DIGITAL INPUT (TO PANEL)
DO	DIGITAL OUTPUT (OUT OF PANEL)
	2-WAY CONTROL VALVE
	3-WAY CONTROL VALVE
C	COMMON
RH	REHEAT
PH	PREHEAT
- - - -	CONTROL WIRING (SIGNAL PATH)
DPT	DIFFERENTIAL PRESSURE SENSOR/TRANSMITTER
FS	FAN SWITCH
SD	DUCT SMOKE DETECTOR
F	FAN ON-OFF SWITCH
FMS	FLOW MEASURING STATION, (OUTDOOR AIR VOLUME REGULATOR)
FZ	FREEZESTAT
HL	HIGH LIMIT TEMPERATURE SENSOR
H	HUMIDISTAT
H	HUMIDITY SENSOR
LS	LIMIT SWITCH
M	MOTOR
MS	MOTOR STARTER
NC	NORMALLY CLOSED
NO	NORMALLY OPEN
—EP—	POWER WIRING
P	STATIC PRESSURE SENSOR
T	TEMPERATURE SENSOR
TT	TEMPERATURE TRANSMITTER
T C,H	THERMOSTAT (C-COOLING, H-HEATING) (H&C-HEATING AND COOLING)
DPS	DIFFERENTIAL PRESSURE SWITCH
TCU	TERMINAL CONTROL UNIT
FS	FLOW SWITCH
VFD	VARIABLE FREQUENCY DRIVE
CSR	CURRENT SENSING RELAY
RDS	REFRIGERANT DETECTION SENSOR
S/S	REMOTE START/STOP
FS-1	FLOW STATION
AHU-1	AIR HANDLING UNIT
AS-1	AIR SEPARATOR
ACC-1	AIR COOLED CHILLER
CCC-1	CLOSED CIRCUIT COOLER
D	DOOR LOUVER (SEE ARCHITECTURAL DRAWING FOR SIZE)
EF-1	EXHAUST FAN
ET-1	EXPANSION TANK
FCU-1	FAN COIL UNIT
VAV1-2	FAN POWERED VARIABLE AIR VOLUME BOX (SERIES)
ΔP	PRESSURE DIFFERENTIAL
HX-1	HEAT EXCHANGER
CP-1	PUMP
EMD	END OF MAIN DRIP STATION
RAF-1	RETURN AIR FAN
FAF-1	FRESH AIR FAN
IH-1	INTAKE AIR HOOD
RH-1	RELIEF AIR HOOD
UH-1	UNIT HEATER
WF-1	WALL FINNED RADIATION
CD-1 (L/S)	TYPICAL, DIFFUSER/REGISTER/GRILLE WITH L/S INDICATED
ER-1	EXHAUST REGISTER DESIGNATION
RR-1	RETURN REGISTER DESIGNATION
SR-1	SIDEWALL REGISTER DESIGNATION
TR-1	TRANSFER REGISTER DESIGNATION
GFGI	GOVERNMENT FURNISHED GOVERNMENT INSTALLED

GENERAL NOTES

1. COORDINATE MECHANICAL EQUIPMENT WITH ALL TRADES TO INSURE PROPER COMPLIANCE WITH CODES AND TO AVOID CONFLICTS.
2. SEE REFLECTED CEILING PLANS SHEETS A4.1 THRU A4.3 FOR EXACT LOCATIONS OF DIFFUSERS, REGISTERS, GRILLES, AND ACCESS PANELS/DOORS.
3. MOUNT ALL WALL THERMOSTATS 1.50 METERS ABOVE FINISHED FLOOR UNLESS OTHERWISE NOTED.
4. RUN ALL HORIZONTAL PIPING AND DUCTWORK ABOVE CEILING UNLESS OTHERWISE NOTED.
5. RUN ALL EXPOSED PIPING AS HIGH AS POSSIBLE UNLESS OTHERWISE NOTED.
6. MAKE DUCT PENETRATIONS OF ALL WALLS WITH SHEET METAL DUCTS. FLEXIBLE DUCT PENETRATIONS OF WALLS ARE NOT ACCEPTABLE.
7. PROVIDE FIRE DAMPERS IN ACCORDANCE WITH THEIR U.L. LISTING AND THE REQUIREMENTS OF NFPA-90A.
8. PROVIDE RIGID TYPE DUCT INSULATION IN ALL AREAS WHERE SUPPLY, RETURN AND OUTSIDE AIR DUCTWORK IS RUN EXPOSED. OUTSIDE SURFACE OF DUCTWORK INSULATION SHALL BE SUITABLE FOR PAINTING.
9. ALL VALVES ARE FULL LINE SIZE EXCEPT CONTROL VALVES AND BALANCING VALVES. SIZE CONTROL VALVES AND BALANCING VALVES FOR FLOW RANGE REQUIRED.
10. PIPE SIZES INDICATED ARE "DN" SIZES NOT HARD METRIC SIZES.
11. ALL DIFFUSERS ARE FOUR WAY BLOW UNLESS OTHERWISE INDICATED BY FLOW ARROWS (→) ON PLAN.
12. LOCATE P/T PLUGS UPSTREAM AND DOWNSTREAM OF ALL EQUIPMENT AND AS INDICATED ON PLANS. PROVIDE EXTENDED PLUGS AND LABELS WHERE PIPING IS INSULATED. PROVIDE REMOVABLE INSULATION PLUG.
13. LOCATE ALL AIR VENTS HIGH AS POSSIBLE.
14. ALL FIRE DAMPERS SHALL BE RATED FOR 1 1/2 HOURS UNLESS OTHERWISE INDICATED.
15. EQUIPMENT PIPING AND DUCTWORK SHALL NOT BE SUPPORTED FROM THE ROOF DECK. ALL PIPING, EQUIPMENT AND DUCTWORK SHALL BE SUPPORTED FROM THE BUILDING STRUCTURE.

REVISIONS

NO	DESCRIPTION	DATE	APPROVED

CLARK·NEXSEN
Architecture & Engineering
6160 Kempsville Circle, Suite 200A
Norfolk, Virginia 23502
757/455-5800
Fax 757/455-5638
http://www.clarknexsen.com

COMMONWEALTH OF VIRGINIA — ENGINEER — No. 14090 — 2/8/99 — PROFESSIONAL

APPROVED
ACTIVITY - SATISFACTORY TO
DATE
APPROVED
FOR O/D FOR COMMANDER NAVFAC
DATE 2/18/99

		O/D
N/A FMD	DESIGN	
LEW3	DRAWN	
FMD	REVIEW	ETC
DRH	QC	
CEC	CHIEF ARCH./ ENGR.	
PROJECT MANAGER		
FIRE PROTECTION		BAS
BRANCH MANAGER		JTM
DESIGN DIRECTOR		JCM

DEPARTMENT OF THE NAVY — NAVAL FACILITIES ENGINEERING COMMAND — ATLANTIC DIVISION — NAVAL STATION NORFOLK, VIRGINIA

FLEET TRAINING CENTER
NORFOLK, VIRGINIA
ENGINEERING TRAINING FACILITY ADDITION

LEGEND AND NOTES

CODE ID. NO. 80091 | SIZE D
SCALE: AS SHOWN
O/D NO. 495052
STA. PROJ. NO. P-179
SPEC. NO. 05-97-7065
CONSTR. CONTR. NO. N62470-97-B-7065
NAVFAC DRAWING NO. 4395052
SHEET 108 OF 174

M1.1

8 7 6 5 4 3 2 1

D C B A

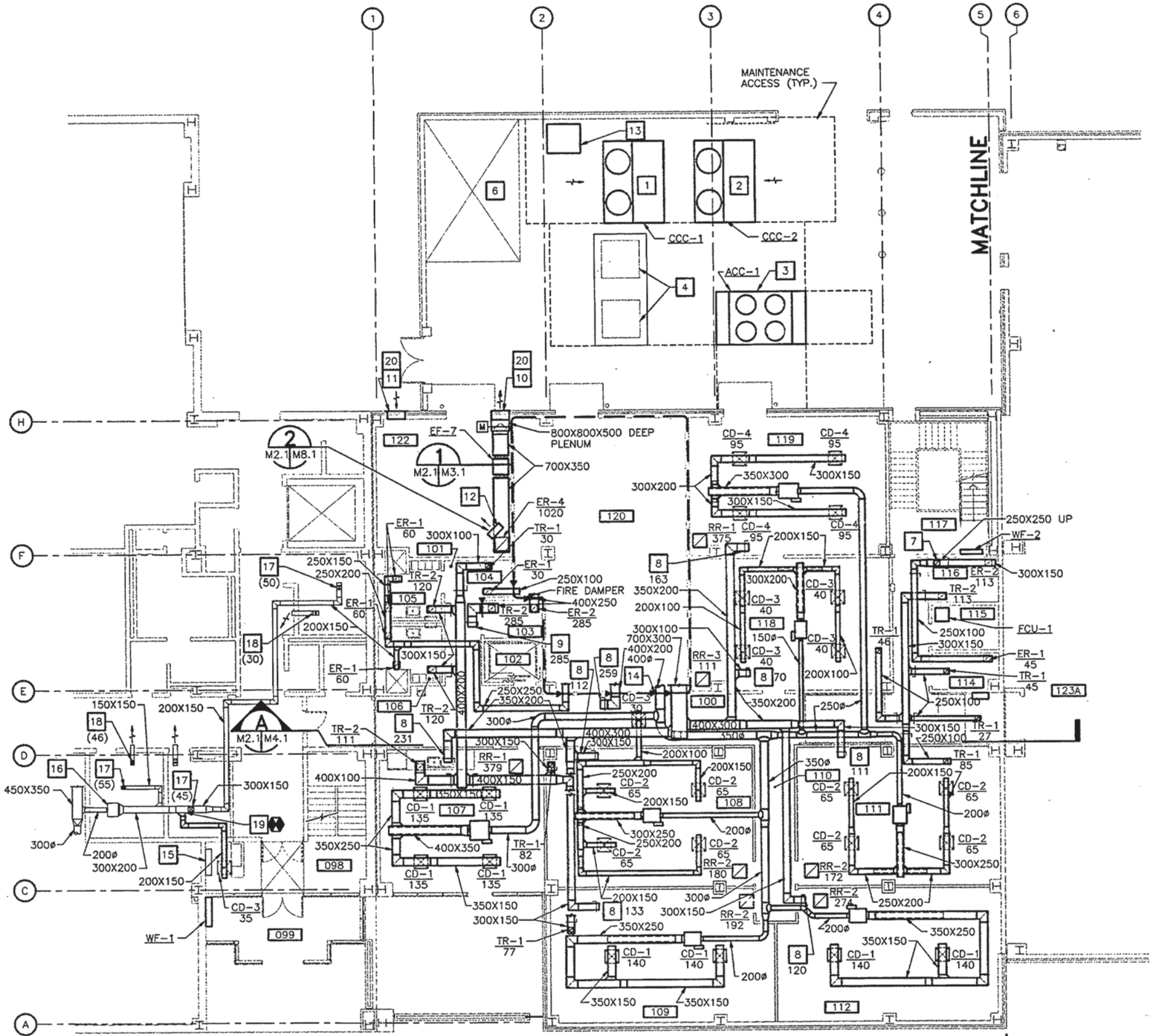

AREA A FIRST FLOOR PLAN – DUCTWORK 5

SCALE: 1:100

NOTES (THIS SHEET ONLY):

1. CLOSED CIRCUIT COOLER (CCC-1) FOR A/C & R LAB WATER COOLED EQUIPMENT.
2. CLOSED CIRCUIT COOLER (CCC-2) FOR A/C & R LAB WATER COOLED EQUIPMENT.
3. AIR COOLED CHILLER (ACC-1)
4. PACKAGED AIR COOLED AIR COMPRESSOR FOR LABORATORY EQUIPMENT (AC-1 & AC-2). SEE PLUMBING SHEET P2.1.
5. FOR VAV BOX TAGS AND TEMPERATURE/HUMIDITY SENSOR LOCATIONS SEE SHEET M2.2.
6. PAD MOUNTED ELECTRICAL TRANSFORMER AND PRIMARY SWITCH.
7. 250X250 EXHAUST AIR DUCT UP TO SECOND FLOOR. FOR CONTINUATION, SEE SHEET M2.4.
8. OPEN RETURN DUCT ABOVE CEILING WITH MANUAL VOLUME DAMPER. RETURN AIR VOLUME INDICATED IN L/S (TYPICAL).
9. TRANSFER DUCT INTO CEILING PLENUM.
10. EXHAUST AIR LOUVER WITH PLENUM SAME SIZE AS LOUVER. 1020 L/S, 25 Pa P.D.
11. OUTSIDE AIR LOUVER WITH PLENUM SAME SIZE AS LOUVER. 1020 L/S, 25 Pa P.D.
12. HOT WATER UNIT HEATER, (UH-2). MOUNT MINIMUM 3 METERS AFF.
13. COOLING WELL, SEE SHEET MU1.1.
14. HIGH VELOCITY DUCT FIRE DAMPER/VACUUM RELIEF DETAIL 1 M2.1 M8.2
15. EXISTING CABINET UNIT HEATER.
16. EXISTING TERMINAL AIR BLENDER LOCATED ABOVE ACOUSTICAL CEILING – ADJUST COOLING AIR INLET REGULATOR TO PROVIDE 185 L/S AIR FLOW TO TERMINAL AIR BLENDER.
17. EXISTING CEILING DIFFUSER – ADJUST TO DELIVER AIR QUANTITY INDICATED (L/S).
18. EXISTING RETURN REGISTER – ADJUST TO DELIVER AIR QUANTITY INDICATED (L/S).
19. CONNECT 200X150 TO EXISTING 300X150.
20. SEE LOUVER SCHEDULE SHEET A7.3 FOR LENGTH AND HEIGHT OF LOUVER.

KEYPLAN

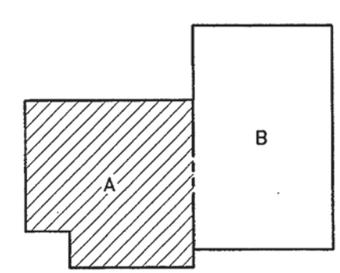

GRAPHIC SCALE

1:100 0 1 2 3 4 5 6 7 8 9 10m

REVISIONS

CLARK·NEXSEN
Architecture & Engineering
6160 Kempsville Circle, Suite 200A
Norfolk, Virginia 23502
757/455-5800
Fax 757/455-5638
http://www.clarknexsen.com

COMMONWEALTH OF VIRGINIA
No. 14090
PROFESSIONAL ENGINEER

APPROVED
ACTIVITY – SATISFACTORY TO
DATE
APPROVED
FOR EFD FOR COMMANDER NAVFAC
DATE 3/8/99

A/E FMD	DESIGN	EFD
LEW3	DRAWN	
JWA	REVIEW	ETC
DRH	QC	
CEC	CHIEF ARCH./ ENGR.	

PROJECT MANAGER
FIRE PROTECTION
BRANCH MANAGER
DESIGN DIRECTOR

DEPARTMENT OF THE NAVY
NAVAL FACILITIES ENGINEERING COMMAND
ATLANTIC DIVISION
NAVAL STATION NORFOLK, VIRGINIA
FLEET TRAINING CENTER
NORFOLK, VIRGINIA
ENGINEERING TRAINING FACILITY ADDITION
AREA A FIRST FLOOR PLAN – DUCTWORK

CODE IO. NO. 80091 SIZE D
SCALE: AS SHOWN
EFD NO. 495053
STA. PROJ. NO. P-179
SPEC. NO. 05-97-7065
CONSTR. CONTR. NO. N62470-97-B-7065
NAVFAC DRAWING NO. 4395053
SHEET 109 OF 174
M2.1

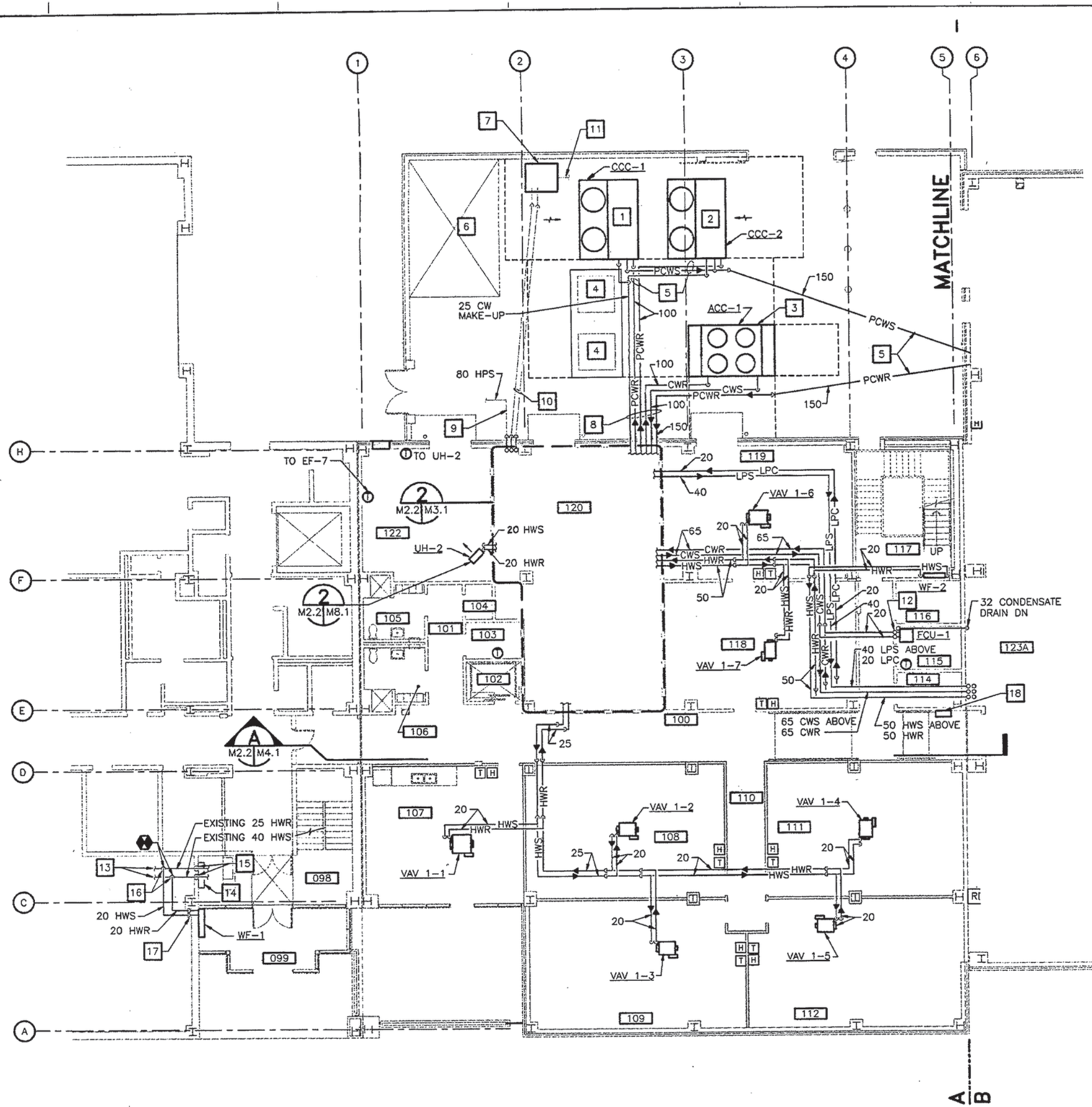

AREA A FIRST FLOOR PLAN – PIPING

SCALE: 1:100

NOTES (THIS SHEET ONLY):

1. CLOSED CIRCUIT COOLER (CCC–1) FOR A/C & R LAB WATER COOLED EQUIPMENT.
2. CLOSED CIRCUIT COOLER (CCC–2) FOR A/C & R LAB WATER COOLED EQUIPMENT.
3. AIR COOLED CHILLER (ACC–1).
4. PACKAGED AIR COOLED AIR COMPRESSOR FOR LABORATORY EQUIPMENT (AC–1 & AC–2). SEE PLUMBING SHEET P2.1.
5. PRE–INSULATED DIRECT BURIED CONDUIT SYSTEM FOR PROCESS COOLING WATER.
6. PAD MOUNTED ELECTRICAL TRANSFORMER AND PRIMARY SWITCH.
7. COOLING WELL SEE SHEET MU1.1.
8. PRE–INSULATED DIRECT BURIED CONDUIT SYSTEM FOR CHILLED AND PROCESS COOLING WATER.
9. PRE–INSULATED DIRECT BURIED HP STEAM CONDUIT SYSTEM RUN BELOW GRADE. FOR CONTINUATION SEE SHEET MU1.1.
10. 50 LPC AND 25 HPC TO COOLING WELL. RUN BELOW GRADE, SEE SHEET MU1.1.
11. 100 COOLING WELL DISCHARGE TO STORM, RUN BELOW GRADE; SEE SHEET MU1.1.
12. 20 CWS, CWR AND DRAIN UP TO FCU–2 AND FCU–3.
13. EXISTING 25 HWR AND 40 HWS ABOVE SUSPENDED ACOUSTICAL TILE CEILING.
14. EXISTING CABINET UNIT HEATER SHALL REMAIN.
15. EXISTING 20 HWS AND 20 HWR DOWN TO CABINET UNIT HEATER.
16. CONNECT 20 HWS AND 20 HWR TO EXISTING ABOVE CEILING.
17. 20 HWS AND 20 HWR DOWN IN FURRED SPACE TO WF–1.
18. SELF–CONTAINED BREATHING APPARATUS FOR A/C & R LAB. MOUNT 1.5 METERS AFF.

KEYPLAN

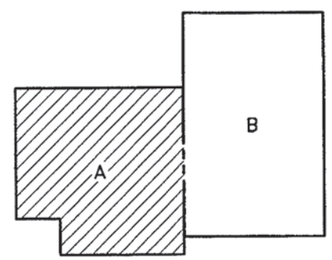

GRAPHIC SCALE

1:100 0 1 2 3 4 5 6 7 8 9 10m

REVISIONS

NO.	DESCRIPTION	DATE	APPROVED

CLARK NEXSEN
Architecture & Engineering
6160 Kempsville Circle, Suite 200A
Norfolk, Virginia 23502
757/455-5800
Fax 757/455-5638
http://www.clarknexsen.com

COMMONWEALTH OF VIRGINIA — No. 14099 — PROFESSIONAL ENGINEER — 2/18/99

APPROVED
ACTIVITY – SATISFACTORY TO
DATE
APPROVED
FOR CTO FOR COMMANDER NAVFAC
DATE 3/8/99

		CTO
FMD	DESIGN	
LEW3	DRAWN	
JWA	REVIEW	ETR
DRH	QC	
CEC	CHIEF	MECH./ ENGR.
PROJECT MANAGER		
FIRE PROTECTION		BJS
BRANCH MANAGER		JTM
DESIGN DIRECTOR		JWA

NAVAL FACILITIES ENGINEERING COMMAND
DEPARTMENT OF THE NAVY
ATLANTIC DIVISION
NAVAL STATION
NORFOLK, VIRGINIA
FLEET TRAINING CENTER
NORFOLK, VIRGINIA
ENGINEERING TRAINING FACILITY ADDITION
AREA A FIRST FLOOR PLAN – PIPING

CODE ID. NO. 80091	SIZE D
SCALE:	AS SHOWN
EFD NO.	495054
STA. PROJ. NO.	P–179
SPEC. NO.	05–97–7065
CONSTR. CONTR. NO.	N62470–97–8–7065
NAVFAC DRAWING NO.	4395054
SHEET	110 OF 174

M2.2

8 | 7 | 6 | 5 | 4 | 3 | 2 | 1

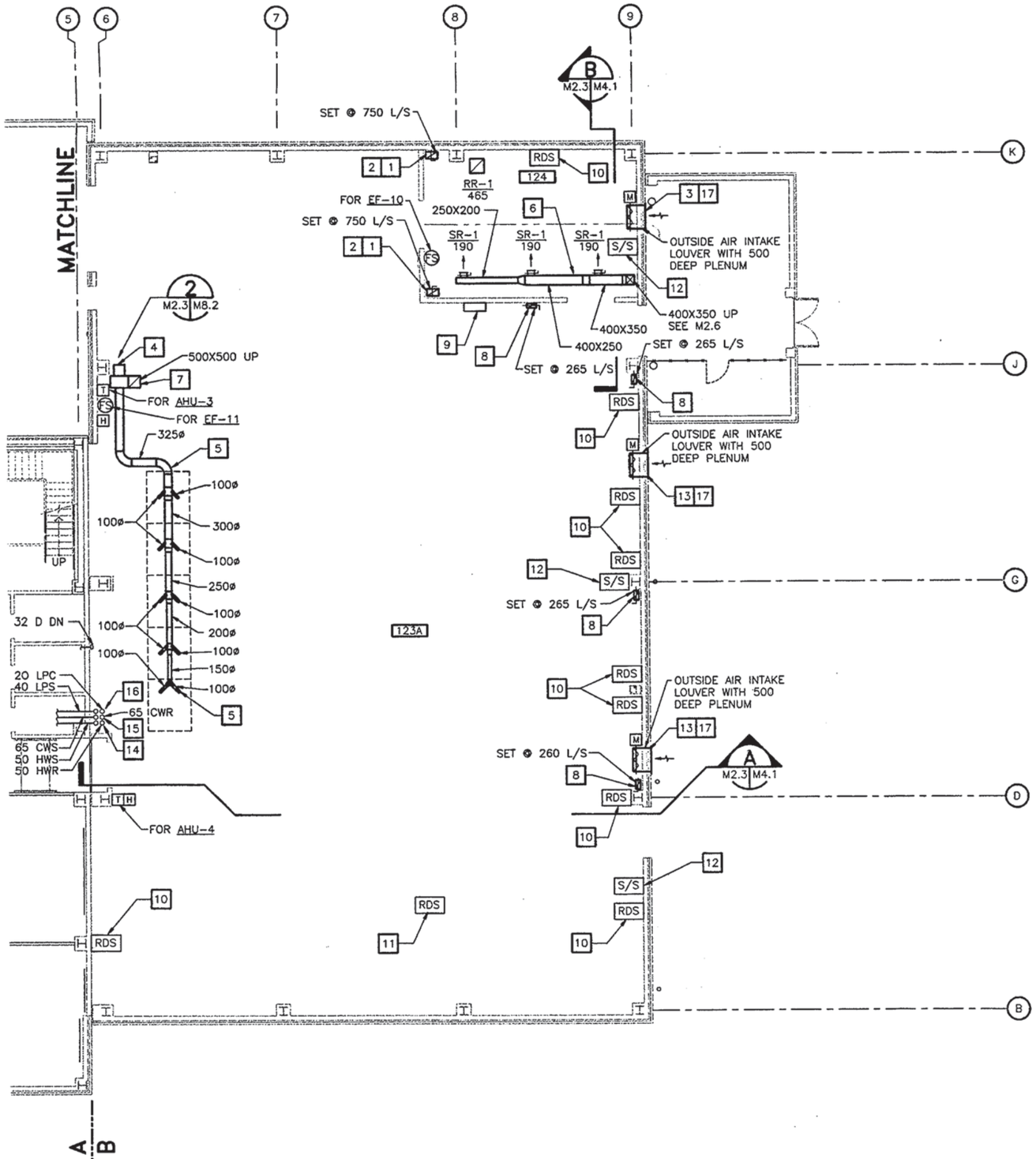

AREA B FIRST FLOOR PLAN

SCALE: 1:100

NOTES (THIS SHEET ONLY):

1. 500X300 EXHAUST AIR DUCT UP TO ROOF MOUNTED EXHAUST FAN FOR EMERGENCY REFRIGERANT LEAK VENTILATION. SEE SHEET M2.6.
2. 500X300 EXHAUST AIR DUCT DOWN TO 300mm ABOVE FINISHED FLOOR; BOTTOM OF DUCT SHALL BE OPEN. FOR CONTINUATION OF RISER SEE M2.6.
3. OUTSIDE AIR LOUVER WITH MOTORIZED DAMPER FOR EMERGENCY REFRIGERANT LEAK VENTILATION. 1500 L/S, 25 Pa P.D.
4. BRAZING HOOD EXHAUST FAN EF-11. FOR MOUNTING DETAIL SEE SHEET M8.2.
5. BRAZING AREA EXHAUST DUCTWORK.
6. RUN SUPPLY DUCT TIGHT TO UNDERSIDE OF STRUCTURAL MEMBERS.
7. 500X500 EXHAUST AIR DUCT UP, FOR CONTINUATION SEE SHEET M2.6.
8. 400X200 EXHAUST AIR DUCT UP TO SECOND FLOOR. FOR CONTINUATION SEE SHEET M2.6.
9. REFRIGERANT LEAK DETECTION SYSTEM CONTROL PANEL. MOUNT 1.5 METERS AFF.
10. REFRIGERANT LEAK DETECTION SENSOR. MOUNT ON WALL 450mm AFF.
11. REFRIGERANT LEAK DETECTION SENSOR FOR (GFGI) COMPRESSOR. SEE SHEET Q1.2. EXTEND SENSOR TUBING TO LOCATION 450mm AFF. TURN SENSOR OVER TO CONTRACTING OFFICER FOR INSTALLATION UNDER SEPARATE EQUIPMENT INSTALLATION CONTRACT.
12. REMOTE START/STOP FOR PROCESS COOLING WATER SYSTEM. MOUNT 1.5 METERS AFF. PROVIDE PROTECTIVE CLEAR, IMPACT RESISTANT, HINGED PLASTIC COVER TO PREVENT ACCIDENTAL TRIPPING.
13. OUTSIDE AIR LOUVER WITH MOTORIZED DAMPER FOR EMERGENCY REFRIGERANT LEAK VENTILATION. 527 L/S, 25 Pa P.D.
14. 50 HWS AND HWR UP TO SECOND FLOOR LEVEL. FOR CONTINUATION, SEE ENLARGED PLAN–RM 123A–SHEET M2.6.
15. 65 CWS AND CWR UP TO SECOND FLOOR LEVEL. FOR CONTINUATION, SEE ENLARGED PLAN–RM 123A–SHEET M2.6.
16. 40 LPS AND 20 LPC UP TO SECOND FLOOR LEVEL. FOR CONTINUATION, SEE ENLARGED PLAN–RM 123A–SHEET M2.6.
17. SEE LOUVER SCHEDULE, SHEET A7.3 FOR LENGTH AND HEIGHT OF LOUVERS.

KEYPLAN

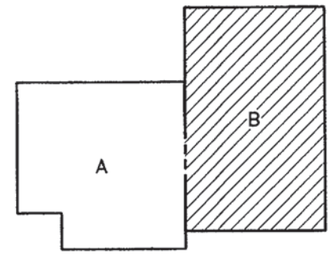

GRAPHIC SCALE

1:100 — 0 1 2 3 4 5 6 7 8 9 10m

REVISIONS

NO.	DESCRIPTION	DATE	APPROVED

CLARK NEXSEN
Architecture & Engineering
6160 Kempsville Circle, Suite 200A
Norfolk, Virginia 23502
757/455-5800
Fax 757/455-5638
http://www.clarknexsen.com

COMMONWEALTH OF VIRGINIA — No. 14090 — PROFESSIONAL ENGINEER — 2/16/99

APPROVED
ACTMIY – SATISFACTORY TO
DATE
APPROVED
FOR EFD FOR COMMANDER NAVFAC
DATE 3/19/99

FMD	DESIGN	EFD
LEW3	DRAWN	
JWA	REVIEW	
DRH	QC	
CEC	CHIEF ARCH./ ENGR.	
PROJECT MANAGER		
FIRE PROTECTION		
BRANCH MANAGER		
DESIGN DIRECTOR		

NAVAL FACILITIES ENGINEERING COMMAND
ATLANTIC DIVISION
NAVAL STATION
DEPARTMENT OF THE NAVY
NORFOLK, VIRGINIA
FLEET TRAINING CENTER
NORFOLK, VIRGINIA
ENGINEERING TRAINING FACILITY ADDITION
AREA B FIRST FLOOR PLAN

CODE ID. NO. 80091	SIZE D
SCALE: AS SHOWN	
EFD NO. 495055	
STA. PROJ. NO. P–179	
SPEC. NO. 05–97–7065	
CONSTR. CONTR. NO. N62470–97–B–7065	
NAVFAC DRAWING NO. 4395055	
SHEET 111 OF 174	

M2.3

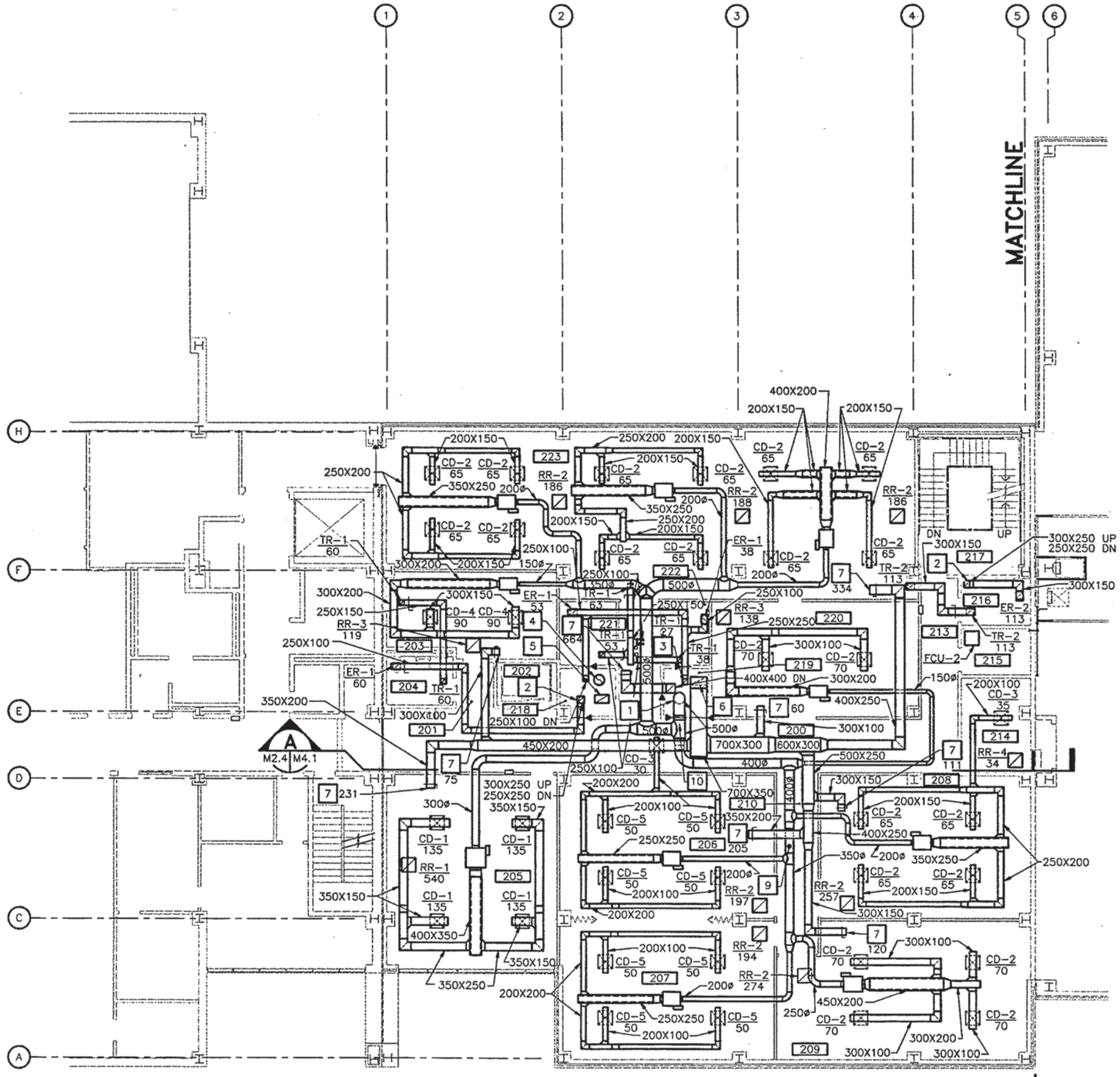

AREA A SECOND FLOOR PLAN – DUCTWORK 8

SCALE: 1:100

NOTES (THIS SHEET ONLY):

1. 500ø SUPPLY AIR DUCT DOWN TO FIRST FLOOR. FOR CONTINUATION, SEE SHEET M3.1.
2. 300X250 EXHAUST AIR DUCT UP TO THIRD FLOOR. FOR CONTINUATION, SEE SHEET M2.7.
3. 250X250 EXHAUST AIR DUCT UP TO THIRD FLOOR. SEE SHEET M2.7.
4. 450ø SUPPLY AIR DUCT UP TO THIRD FLOOR. FOR CONTINUATION, SEE SHEET M2.7.
5. 600X350 RETURN AIR DUCT UP TO THIRD FLOOR. FOR CONTINUATION, SEE SHEET M2.7.
6. 700X350 RETURN AIR DUCT DOWN TO FIRST FLOOR. FOR CONTINUATION, SEE SHEET M3.1.
7. OPEN RETURN AIR DUCT ABOVE CEILING WITH MANUAL VOLUME DAMPER (TYPICAL). RETURN AIR VOLUME INDICATED IN L/S.
8. FOR VAV BOX TAGS AND TEMPERATURE/HUMIDITY SENSOR LOCATIONS SEE SHEET M2.5.
9. DUCT STATIC PRESSURE SENSOR FOR AHU-1.
10. HIGH VELOCITY DUCT FIRE DAMPER/VACUUM RELIEF DETAIL 1 M2.4 M8.2

KEYPLAN

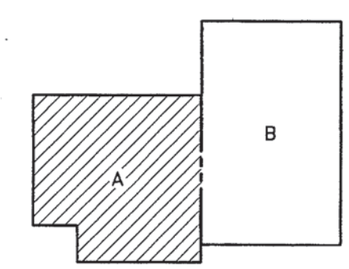

GRAPHIC SCALE

1:100 0 1 2 3 4 5 6 7 8 9 10m

REVISIONS

SYM.	DESCRIPTION	DATE	APPROVED

CLARK•NEXSEN
Architecture & Engineering
6160 Kempsville Circle, Suite 200A
Norfolk, Virginia 23502
757/455-5800
Fax 757/455-5638
http://www.clarknexsen.com

COMMONWEALTH OF VIRGINIA
FRANKLIN E. ROBERTS
No. 14090
2/10/99
PROFESSIONAL ENGINEER

APPROVED
ACTIVITY – SATISFACTORY TO
DATE
APPROVED
FOR EFD FOR COMMANDER NAVFAC
DATE 3/8/99

FMD	DESIGN	EFD
LEW3	DRAWN	
JWA	REVIEW	ETC
DRH	QC	
CEC	CHIEF ARCH./ ENGR.	

PROJECT MANAGER
FIRE PROTECTION RJT
BRANCH MANAGER JTM
DESIGN DIRECTOR

DEPARTMENT OF THE NAVY
NAVAL FACILITIES ENGINEERING COMMAND
ATLANTIC DIVISION
NAVAL STATION NORFOLK, VIRGINIA
FLEET TRAINING CENTER
ENGINEERING TRAINING FACILITY ADDITION
AREA A SECOND FLOOR PLAN – DUCTWORK

CODE ID. NO. 80091 SIZE D
SCALE: AS SHOWN
EFD NO. 495056
STA. PROJ. NO. P-179
SPEC. NO. 05-97-7065
CONSTR. CONTR. NO. N62470-97-B-7065
NAVFAC DRAWING NO. 4395056
SHEET 112 OF 174
M2.4

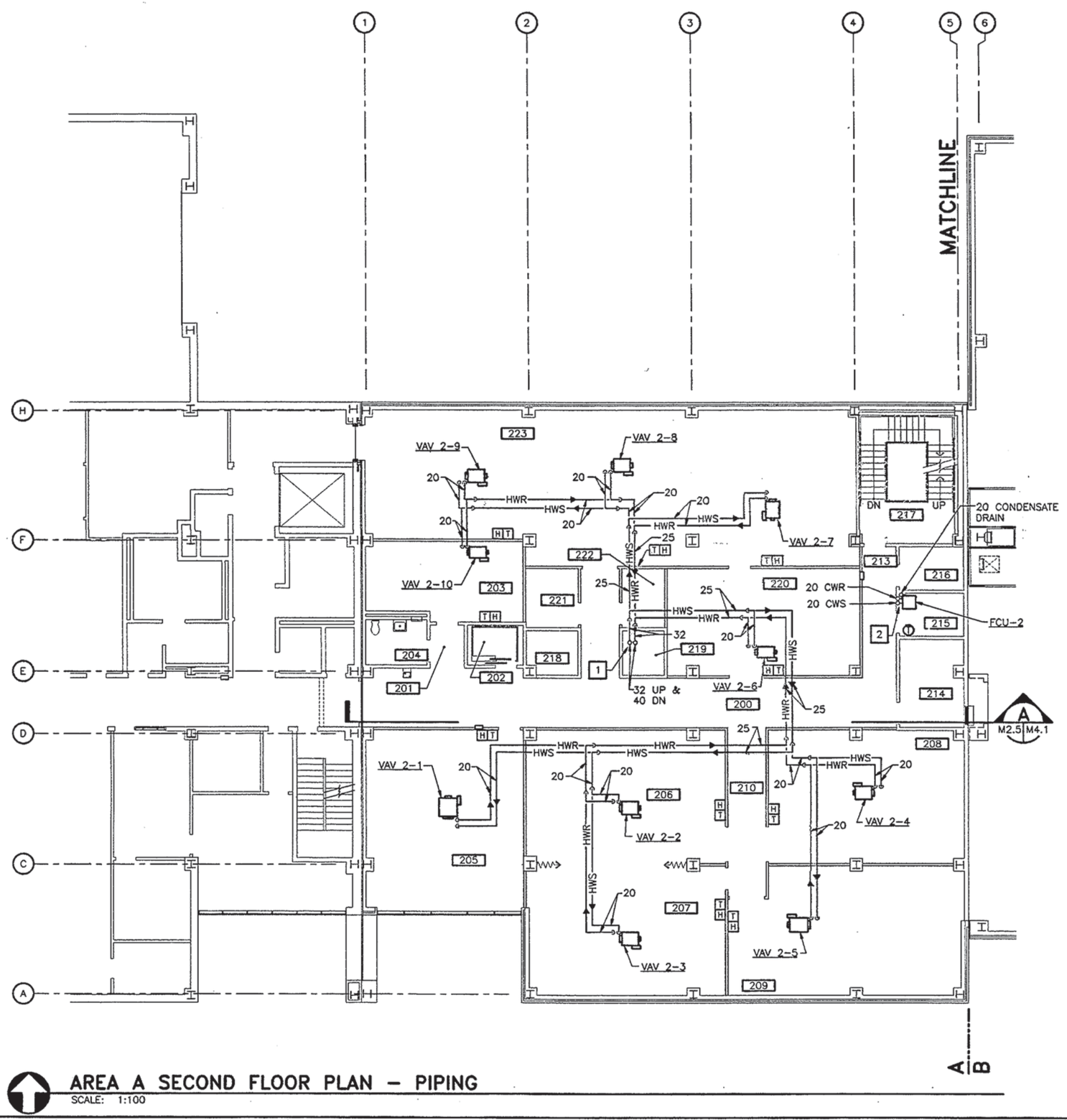

AREA A SECOND FLOOR PLAN – PIPING

SCALE: 1:100

NOTES (THIS SHEET ONLY):

1. 32 HWS AND HWR UP TO THIRD FLOOR. FOR CONTINUATION SEE SHEET M2.8.
2. 20 CWS, CWR AND CONDENSATE DRAIN UP TO FCU-3.

KEYPLAN

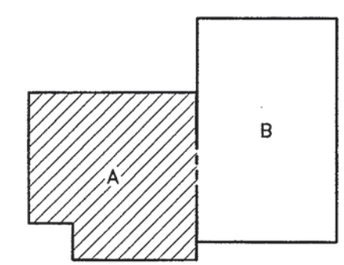

GRAPHIC SCALE

1:100 0 1 2 3 4 5 6 7 8 9 10m

REVISIONS

CLARK•NEXSEN
Architecture & Engineering
6160 Kempsville Circle, Suite 200A
Norfolk, Virginia 23502
757/455-5800
Fax 757/455-5638
http://www.clarknexsen.com

COMMONWEALTH OF VIRGINIA
TOMMY V. JENKS
14090
PROFESSIONAL ENGINEER
12/1/99

APPROVED
ACTIVITY – SATISFACTORY TO
DATE
APPROVED
FOR EFD FOR COMMANDER NAVFAC
DATE 2/8/99

FMD	DESIGN	EFD
LEW3	DRAWN	
JWA	REVIEW	
DRH	QC	
CEC	CHIEF ARCH./ ENGR.	
PROJECT MANAGER		
FIRE PROTECTION		
BRANCH MANAGER		
DESIGN DIRECTOR		

DEPARTMENT OF THE NAVY
NAVAL FACILITIES ENGINEERING COMMAND
NAVAL STATION ATLANTIC DIVISION NORFOLK, VIRGINIA
FLEET TRAINING CENTER NORFOLK, VIRGINIA
ENGINEERING TRAINING FACILITY ADDITION
AREA A SECOND FLOOR PLAN – PIPING

CODE ID. NO. 80091 SIZE D
SCALE: AS SHOWN
EFD NO. 495057
STA. PROJ. NO. P-179
SPEC. NO. 05-97-7065
CONSTR. CONTR. NO. N62470-97-B-7065
NAVFAC DRAWING NO. 4395057
SHEET 113 OF 174

M2.5

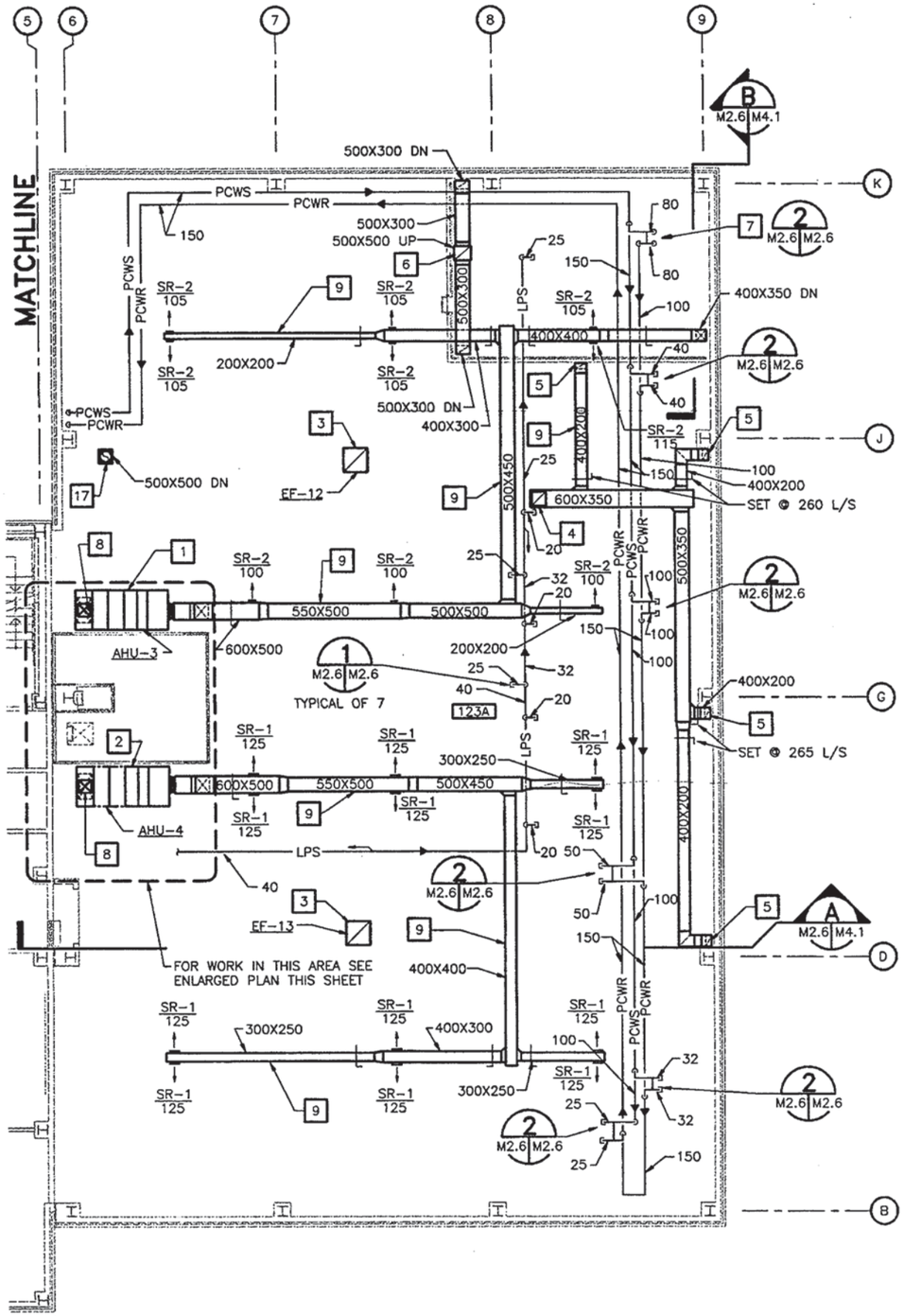

AREA B SECOND FLOOR PLAN – DUCTWORK AND PIPING

SCALE: 1:100

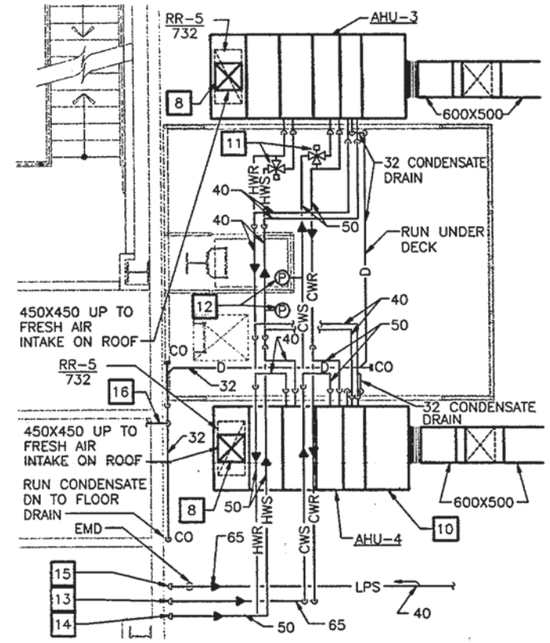

ENLARGED PLAN – RM 123A

SCALE: 1:50

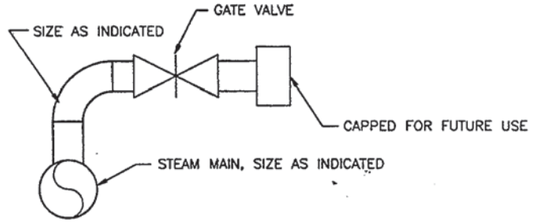

TYPICAL STEAM TAKE-OFF DETAIL

M2.6 M2.6 NO SCALE

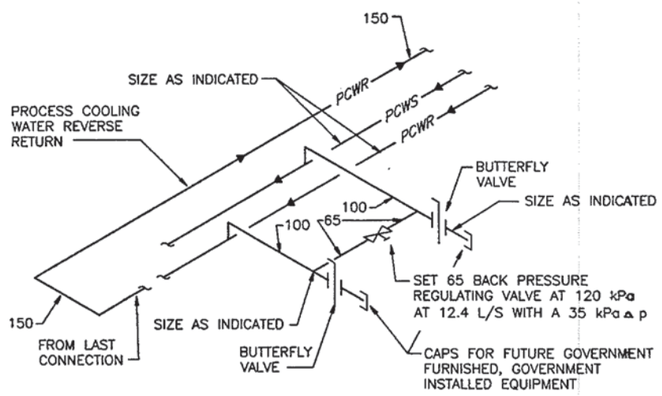

TYPICAL PROCESS COOLING WATER TAKE-OFF DETAIL

M2.6 M2.6 NO SCALE

NOTES (THIS SHEET ONLY):

1. AHU-3 SUSPENDED FROM ROOF STRUCTURE.
2. AHU-4 SUSPENDED FROM ROOF STRUCTURE.
3. ROOF MOUNTED EXHAUST FAN FOR GENERAL EXHAUST.
4. 500X500 EXHAUST AIR DUCT UP TO ROOF MOUNTED EXHAUST FAN (EF-9) FOR EMERGENCY REFRIGERANT LEAK VENTILATION.
5. 400X200 EXHAUST AIR DUCT DOWN TO 300mm ABOVE FINISHED FLOOR. BOTTOM OF DUCT SHALL BE OPEN.
6. 500X500 UP TO EF-10 ON ROOF.
7. EXTEND 150 BRIDGE CONNECTION DOWN THRU SLAB. EXTEND TO 150mm BELOW SLAB TERMINATE WITH VALVES AND BLIND FLANGES.
8. 450X450 OUTSIDE AIR DUCT UP TO AIR INTAKE VENT ON ROOF (IH-1).
9. DUCTWORK RUN AT APPROXIMATELY 6.5 METERS AFF (TYPICAL).
10. SEE SHEET M8.3 FOR AHU-3 & AHU-4 SUPPORT DETAILS.
11. THREE-WAY PUMP BYPASS VALVE.
12. THREE-WAY PUMP BYPASS VALVE DIFFERENTIAL PRESSURE SENSOR.
13. 65 CWS AND CWR DOWN TO FIRST FLOOR. FOR CONTINUATION, SEE SHEET M2.3.
14. 50 HWS AND HWR DOWN TO FIRST FLOOR. FOR CONTINUATION, SEE SHEET M2.3.
15. 40 LPS AND 20 LPC DOWN TO FIRST FLOOR. FOR CONTINUATION, SEE SHEET M2.3.
16. 32 CONDENSATE DRAIN LINE FROM FCU'S.
17. 400ø UP TO RELIEF VENT STACK ON ROOF, PROVIDE SMACNA APDIC TYPE STACK HEAD STACK SHALL TERMINATE 1200mm ABOVE ROOF. (RH-1)

KEYPLAN

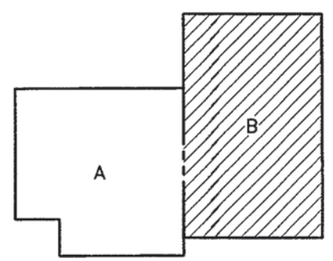

GRAPHIC SCALE

1:100 0 1 2 3 4 5 6 7 8 9 10m

1:50 0 0.5 1 2 3 4 5m

REVISIONS

NO.	DESCRIPTION	DATE	APPROVED

CLARK NEXSEN
Architecture & Engineering
6160 Kempsville Circle, Suite 200A
Norfolk, Virginia 23502
757/455-5800
Fax 757/455-5638
http://www.clarknexsen.com

COMMONWEALTH OF VIRGINIA — No. 4090 — 6/18/09 — PROFESSIONAL ENGINEER

APPROVED
ACTIVITY – SATISFACTORY TO
DATE
APPROVED
FOR CTO FOR COMMANDER NAVFAC
DATE 2/18/09

		CTO
FMD	DESIGN	
LEW3	DRAWN	
JWA	REVIEW	CTC
DRH	QC	
CEC	CHIEF ARCH/ ENGR.	
PROJECT MANAGER		
FIRE PROTECTION		EST
BRANCH MANAGER		JTM
DESIGN DIRECTOR		BPB

DEPARTMENT OF THE NAVY
NAVAL FACILITIES ENGINEERING COMMAND
NAVAL STATION ATLANTIC DIVISION
NORFOLK, VIRGINIA
FLEET TRAINING CENTER
NORFOLK, VIRGINIA
ENGINEERING TRAINING FACILITY ADDITION
AREA B SECOND FLOOR PLAN – DUCTWORK AND PIPING

CODE ID. NO. 80091	SIZE D
SCALE: AS SHOWN	
CTO NO. 495058	
STA. PROJ. NO. P-179	
SPEC. NO. 05-97-7065	
CONSTR. CONTR. NO. N62470-97-B-7065	
NAVFAC DRAWING NO. 4395058	
SHEET 114 OF 174	

M2.6

8 7 6 5 4 3 2 1

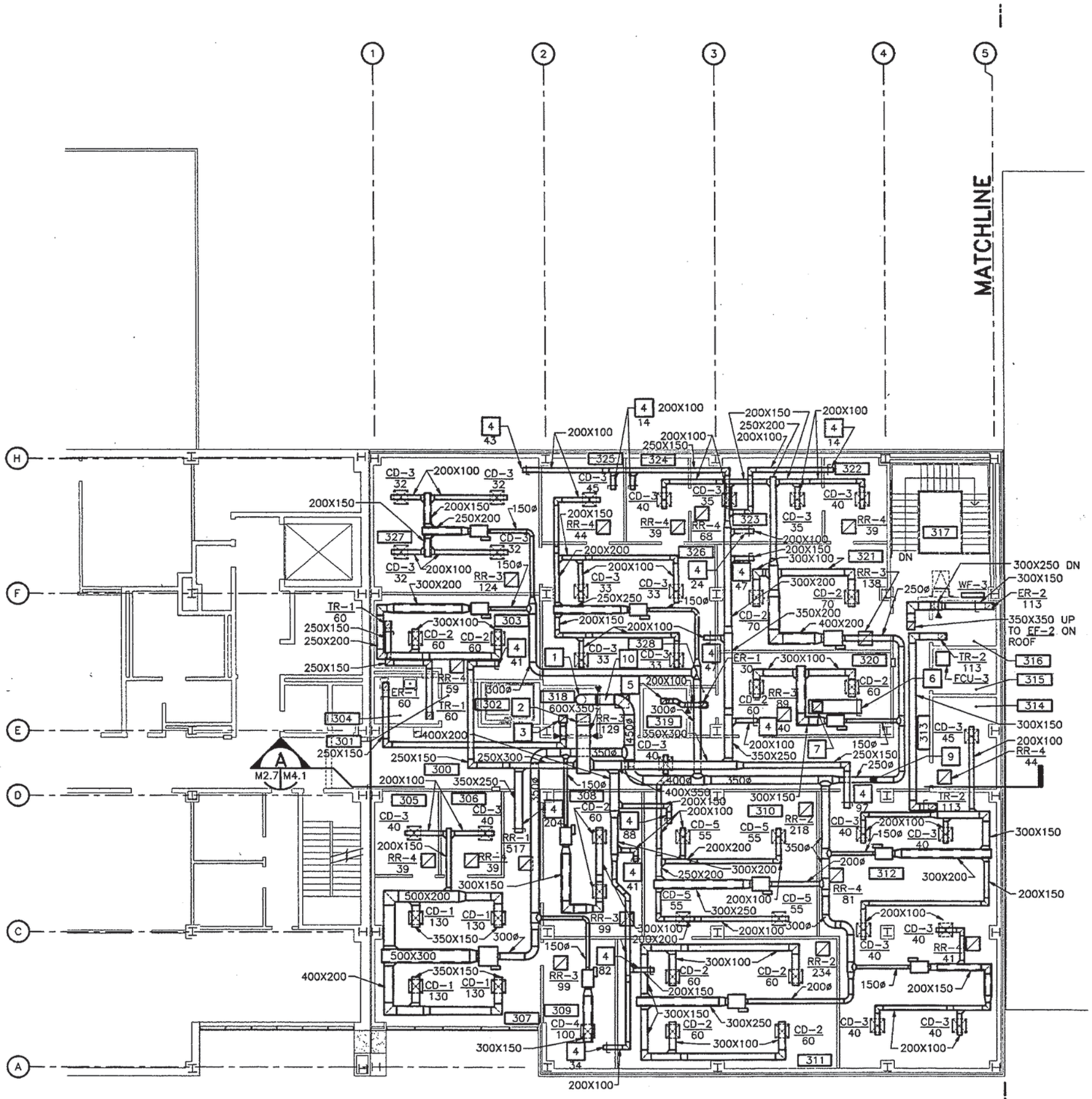

AREA A THIRD FLOOR PLAN – DUCTWORK [8]

SCALE: 1:100

NOTES (THIS SHEET ONLY):

1. 450ø SUPPLY AIR DUCT DOWN TO FIRST FLOOR. FOR CONTINUATION, SEE SHEET M3.1.
2. 600X350 RETURN AIR DUCT DOWN TO FIRST FLOOR. FOR CONTINUATION, SEE SHEET M3.1.
3. 350X350 EXHAUST AIR DUCT UP TO EF-1 ON ROOF; 300X250 DOWN.
4. OPEN RETURN AIR DUCT ABOVE CEILING WITH MANUAL VOLUME DAMPER. RETURN AIR VOLUME INDICATED IN L/S(TYPICAL).
5. 250X250 EXHAUST AIR DUCT UP TO EF-3 ON ROOF.
6. 600X350 OPEN EXHAUST AIR DUCT ABOVE CEILING WITH MANUAL VOLUME DAMPER; 978 L/S.
7. 450X450 EXHAUST AIR DUCT UP TO EF-5 ON ROOF.
8. FOR VAV BOX TAGS AND TEMPERATURE/HUMIDITY SENSOR LOCATIONS SEE SHEET M2.8
9. DUCT STATIC PRESSURE SENSOR FOR AHU-2.
10. HIGH VELOCITY DUCT FIRE DAMPER/VACUUM RELIEF DETAIL 1/M2.7 M8.2

KEYPLAN

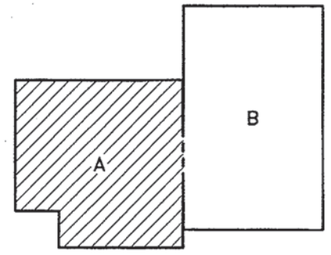

GRAPHIC SCALE

1:100 0 1 2 3 4 5 6 7 8 9 10m

REVISIONS

NO.	DESCRIPTION	DATE	APPROVED

CLARK NEXSEN
Architecture & Engineering
6160 Kempsville Circle, Suite 200A
Norfolk, Virginia 23502
757/455-5800
Fax 757/455-5638
http://www.clarknexsen.com

COMMONWEALTH OF VIRGINIA — No. 14090 — PROFESSIONAL ENGINEER

APPROVED
ACTIVITY – SATISFACTORY TO
DATE
APPROVED
FOR CO FOR COMMANDER NAVFAC
DATE 2/19/99

FMD	DESIGN
LEW3	DRAWN
JWA	REVIEW
DRH	QC
CEC	CHIEF ARCH./ ENGR.
PROJECT MANAGER	
FIRE PROTECTION	
BRANCH MANAGER	
DESIGN DIRECTOR	

DEPARTMENT OF THE NAVY — NAVAL FACILITIES ENGINEERING COMMAND — NORFOLK, VIRGINIA
NAVAL STATION — ATLANTIC DIVISION — NORFOLK, VIRGINIA
FLEET TRAINING CENTER
ENGINEERING TRAINING FACILITY ADDITION
AREA A THIRD FLOOR PLAN – DUCTWORK

CODE ID. NO. 80091	SIZE D
SCALE	AS SHOWN
CTO NO.	495059
STA. PROJ. NO.	P-179
SPEC. NO.	05-97-7065
CONSTR. CONTR. NO.	N62470-97-B-7065
NAVFAC DRAWING NO.	4395059
SHEET	115 OF 174

M2.7

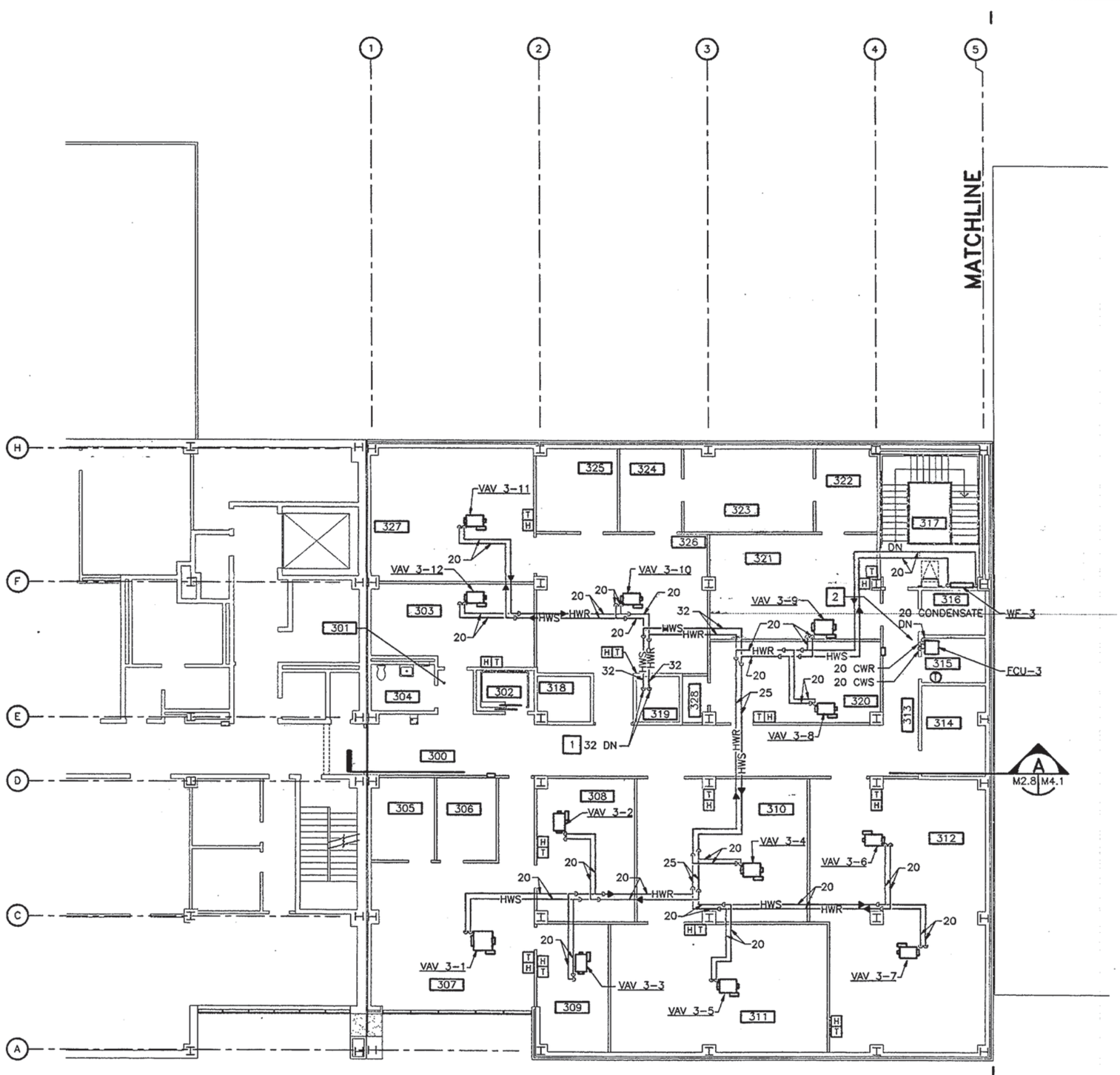

AREA A THIRD FLOOR PLAN – PIPING

SCALE: 1:100

NOTES (THIS SHEET ONLY):

1. 32 HWS AND HWR DOWN TO SECOND FLOOR. FOR CONTINUATION SEE SHEET M2.5.
2. 20 CWS, CWR AND CONDENSATE DRAIN DOWN.

KEYPLAN

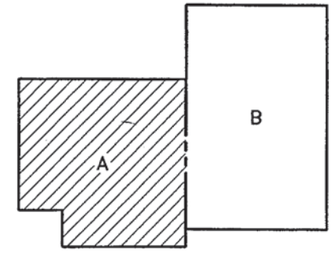

GRAPHIC SCALE

1:100 0 1 2 3 4 5 6 7 8 9 10m

REVISIONS

SYM. DESCRIPTION DATE APPROVED

CLARK • NEXSEN
Architecture & Engineering
6160 Kempsville Circle, Suite 200A
Norfolk, Virginia 23502
757/455-5800
Fax 757/455-5638
http://www.clarknexsen.com

COMMONWEALTH OF VIRGINIA
No. 14090
PROFESSIONAL ENGINEER
1/21/99

APPROVED
ACTIVITY – SATISFACTORY TO
DATE
APPROVED
FOR EFD FOR COMMANDER NAVFAC
DATE 3/8/99

A/E EFD
FMD DESIGN
LEW3 DRAWN
JWA REVIEW CTC
DRH QC
CEC CHIEF ARCH./ ENGR.
PROJECT MANAGER
FIRE PROTECTION
BRANCH MANAGER
DESIGN DIRECTOR

DEPARTMENT OF THE NAVY
NAVAL FACILITIES ENGINEERING COMMAND
NAVAL STATION ATLANTIC DIVISION NORFOLK, VIRGINIA
FLEET TRAINING CENTER NORFOLK, VIRGINIA
ENGINEERING TRAINING FACILITY ADDITION
AREA A THIRD FLOOR PLAN – PIPING

CODE ID. NO. 80091 SIZE D
SCALE: AS SHOWN
EFD NO. 495060
STA. PROJ. NO. P-179
SPEC. NO. 05-97-7065
CONSTR. CONTR. NO. N62470-97-B-7065
NAVFAC DRAWING NO. 4395060
SHEET 116 OF 174
M2.8

NOTES (THIS SHEET ONLY):

1. STEAM AND CONDENSATE SERVICE ENTRANCE, SEE SHEET MU1.1.
2. STEAM PRESSURE REDUCING STATION, SEE SHEET M6.2.
3. CHILLER LOOP PUMP (CP–5).
4. HOT WATER CIRCULATING PUMP (CP–2).
5. HOT WATER EXPANSION TANK (ET–2).
6. HOT WATER AIR SEPARATOR (AS–2).
7. STEAM TO HOT WATER HEAT EXCHANGER (HX–1).
8. DOMESTIC HOT WATER GENERATOR (WH–1). SEE SHEET P2.1.
9. FOR CONTINUATION, SEE SHEET M2.2.
10. AIR RECEIVER (AR–1) FOR LABORATORY COMPRESSED AIR AND REFRIGERATED AIR DRYER (AD–1) FOR LABORATORY COMPRESSED AIR.
11. CHILLED WATER CIRCULATING PUMP (CP–1).
12. PROCESS COOLING WATER CIRCULATING PUMP (CP–4) FOR CCC–1 SERVING A/C & R LAB.
13. PROCESS COOLING WATER CIRCULATING PUMP (CP–3) FOR CCC–2 SERVING A/C & R LAB.
14. CHILLED WATER EXPANSION TANK (ET–1).
15. CHILLED WATER AIR SEPARATOR (AS–1).
16. TEMPERATURE CONTROLS AIR COMPRESSOR.
17. TEMPERATURE CONTROLS REFRIGERATED AIR DRYER
18. RETURN AIR DUCT UP, FOR CONTINUATION, SEE SHEET M2.4.
19. SUPPLY AIR DUCT UP, FOR CONTINUATION, SEE SHEET M2.4.
20. RETURN AIR DUCT UP, FOR CONTINUATION, SEE SHEET M2.4.
21. FOR CONTINUATION, SEE SHEET M2.1.
22. MECHANICAL EQUIPMENT MAINTENANCE ACCESS (TYPICAL).
23. HOT WATER UNIT HEATER (UH–1). (2 / M3.1 M8.1)
24. CHILLED WATER AND CONDENSER WATER PIPING ENTRANCE, SEE M2.2 FOR CONTINUATION.
25. DOMESTIC WATER PRESSURE BOOSTER PUMP (BP–1).
26. ELECTRICAL PANEL AND REQUIRED CLEARANCE.
27. LIMITS OF CHASE ABOVE.
28. SUPPLY AIR DUCT UP, FOR CONTINUATION, SEE SHEET M2.4.
29. 25 CW MAKE–UP, FOR CONTINUATION, SEE SHEET P2.1.
30. OUTSIDE AIR TEMPERATURE SENSOR FOR BLDG. MOUNT 1.5 METERS ABOVE GRADE.

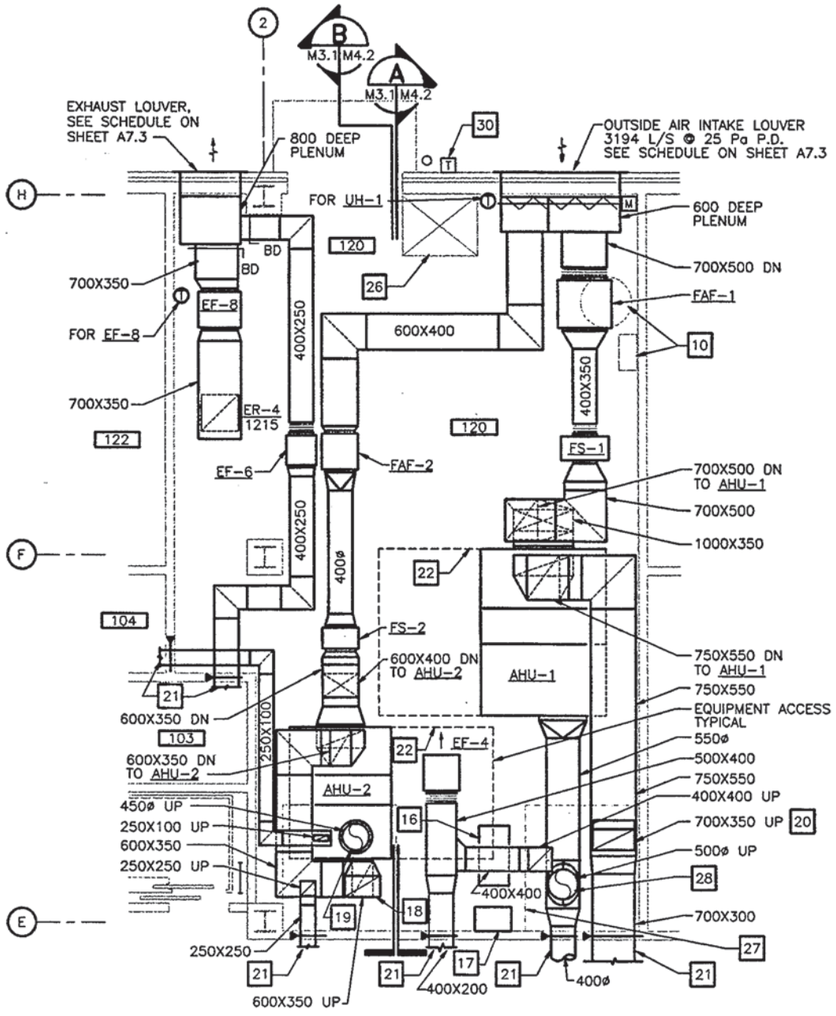

1 ENLARGED MECHANICAL ROOM 120 PLAN – DUCTWORK

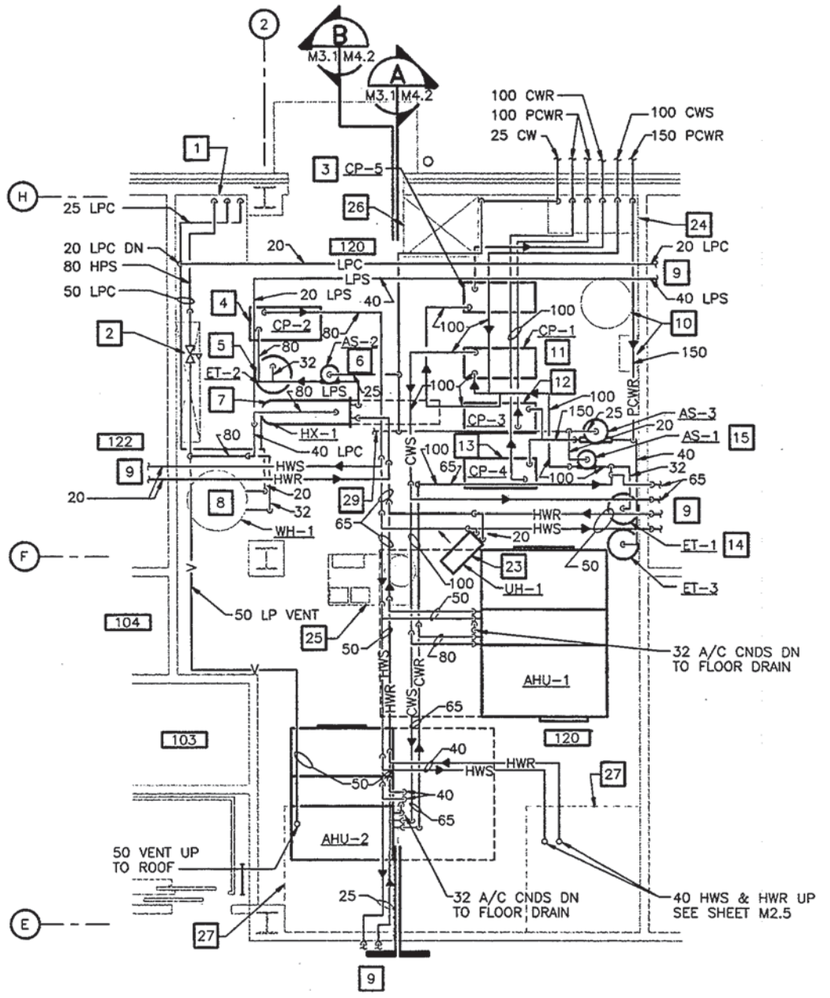

2 ENLARGED MECHANICAL ROOM 120 PLAN – PIPING

KEYPLAN

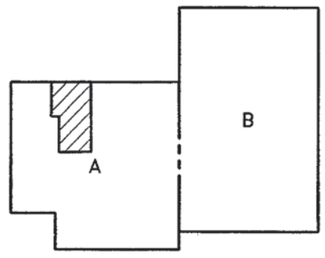

GRAPHIC SCALE

1:50 — 0 0.5 1 2 3 4 5m

REVISIONS				
NO.	DESCRIPTION	DATE	APPROVED

CLARK•NEXSEN
Architecture & Engineering
6160 Kempsville Circle, Suite 200A
Norfolk, Virginia 23502
757/455-5800
Fax 757/455-5638
http://www.clarknexsen.com

COMMONWEALTH OF VIRGINIA — No. 14090 — PROFESSIONAL ENGINEER

APPROVED
ACTIVITY – SATISFACTORY TO
DATE
APPROVED
FOR CTO FOR COMMANDER NAVFAC
DATE 2/8/99

		CTO
FMD	DESIGN	
LEW3	DRAWN	
JWA	REVIEW	CTE
DRH	QC	
CEC	CHIEF ARCH./ ENGR.	
PROJECT MANAGER		BAT
FIRE PROTECTION		
BRANCH MANAGER		DTA
DESIGN DIRECTOR		

DEPARTMENT OF THE NAVY
NAVAL FACILITIES ENGINEERING COMMAND
NAVAL STATION ATLANTIC DIVISION NORFOLK, VIRGINIA
FLEET TRAINING CENTER NORFOLK, VIRGINIA
ENGINEERING TRAINING FACILITY ADDITION
ENLARGED MECHANICAL ROOM PLAN

CODE ID. NO. 80091 | SIZE D
SCALE: AS SHOWN
CTO NO. 495061
STA. PROJ. NO. P–179
SPEC. NO. 05–97–7065
CONSTR. CONTR. NO. N62470–97–B–7065
NAVFAC DRAWING NO. 4395061
SHEET 117 OF 174

M3.1

8 | 7 | 6 | 5 | 4 | 3 | 2 | 1

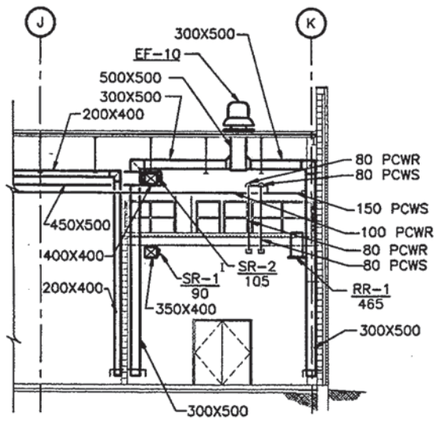

B SECTION
M2.3,M2.6 M4.1 SCALE: 1:100

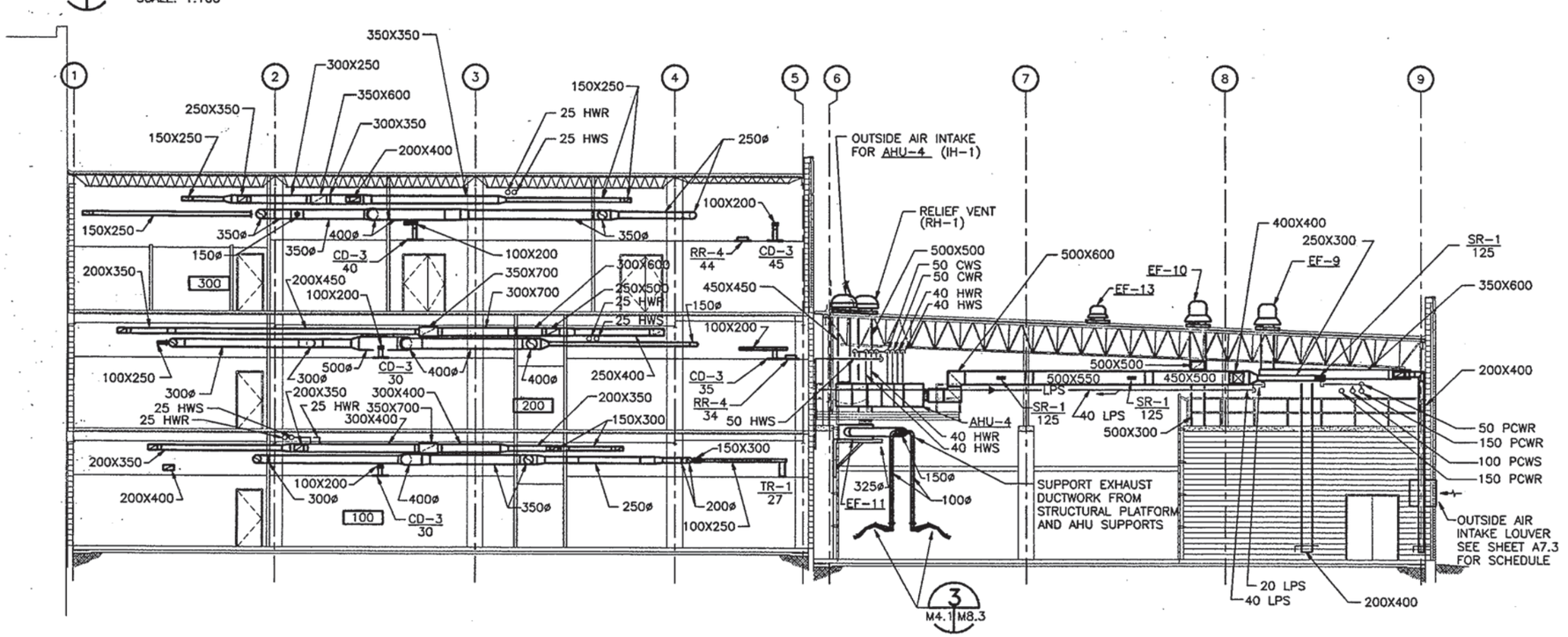

A SECTION
M2.1,M2.2,M2.3,M2.4,M2.5,M2.6,M2.7,M2.8 M4.1 SCALE: 1:100

GRAPHIC SCALE
1:100 0 1 2 3 4 5 6 7 8 9 10m

REVISIONS

CLARK•NEXSEN
Architecture & Engineering
6160 Kempsville Circle, Suite 200A
Norfolk, Virginia 23502
757/455-5800
Fax 757/455-5638
http://www.clarknexsen.com

COMMONWEALTH OF VIRGINIA
PROFESSIONAL ENGINEER
No. 14090
1/21/99

APPROVED
ACTIVITY – SATISFACTORY TO
DATE
APPROVED
FOR EFD FOR COMMANDER NAVFAC
DATE 3/8/99

FMD DESIGN
LEW3 DRAWN
JWA REVIEW
DRH QC
CEC CHIEF ARCH./ ENGR.
PROJECT MANAGER
FIRE PROTECTION
BRANCH MANAGER
DESIGN DIRECTOR

DEPARTMENT OF THE NAVY
NAVAL FACILITIES ENGINEERING COMMAND
ATLANTIC DIVISION
NORFOLK, VIRGINIA
NAVAL STATION
FLEET TRAINING CENTER
NORFOLK, VIRGINIA
ENGINEERING TRAINING FACILITY ADDITION
SECTIONS

CODE ID. NO. 80091 SIZE D
SCALE: AS SHOWN
EFD NO. 495062
STA. PROJ. NO. P-179
SPEC. NO. 05-97-7065
CONSTR. CONTR. NO. N62470-97-B-7065
NAVFAC DRAWING NO. 4395062
SHEET 118 OF 174
M4.1

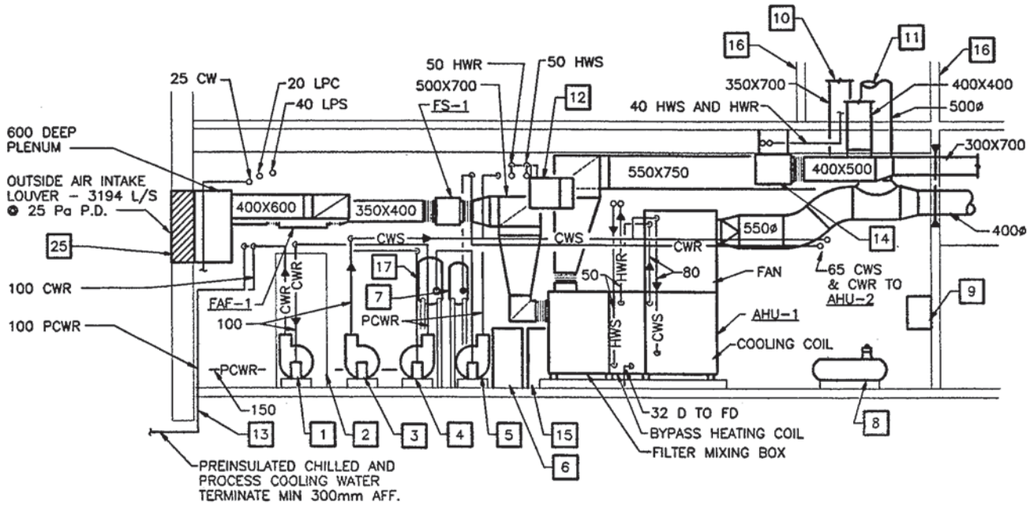

A M3.1 M4.2 **SECTION**

SCALE: 1:50

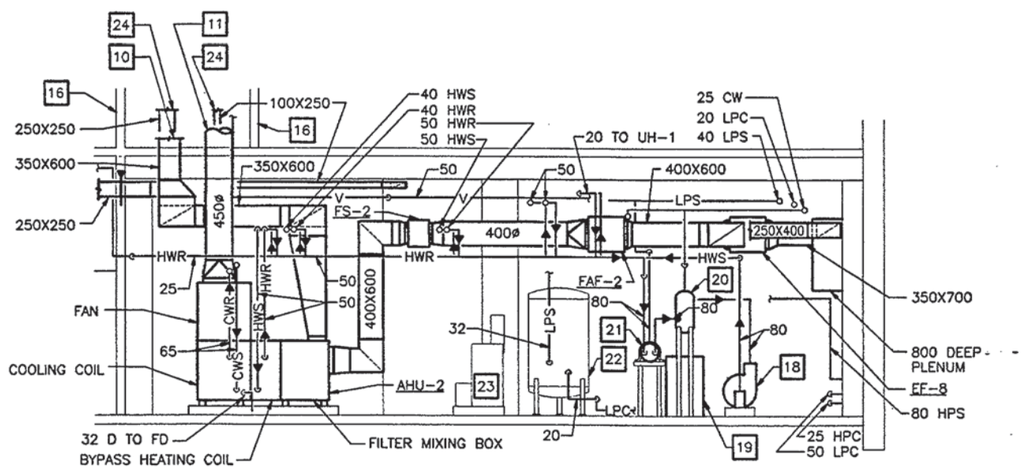

B M3.1 M4.2 **SECTION**

SCALE: 1:50

NOTES (THIS SHEET ONLY):

1. CHILLER LOOP PUMP (CP-5).
2. AIR RECEIVER (AR-1) FOR LABORATORY COMPRESSED AIR AND REFRIGERATED AIR DRYER (AD-1) FOR LABORATORY COMPRESSED AIR.
3. CHILLED WATER CIRCULATING PUMP (CP-1).
4. PROCESS COOLING WATER CIRCULATING PUMP (CP-3) FOR CCC-2 SERVING A/C & R LAB.
5. PROCESS COOLING WATER CIRCULATING PUMP (CP-4) FOR CCC-1 SERVING A/C & R LAB.
6. CHILLED WATER EXPANSION TANK (ET-1).
7. CHILLED WATER AIR SEPARATOR (AS-1).
8. TEMPERATURE CONTROLS AIR COMPRESSOR.
9. TEMPERATURE CONTROLS REFRIGERATED AIR DRYER
10. RETURN AIR DUCT UP TO SECOND FLOOR. FOR CONTINUATION, SEE SHEET M2.4.
11. SUPPLY AIR DUCT UP TO SECOND FLOOR. FOR CONTINUATION, SEE SHEET M2.4.
12. HOT WATER UNIT HEATER (UH-1). 2 / M3.1 M8.1
13. CHILLED WATER AND CONDENSER WATER PIPING ENTRANCE, SEE M2.2 FOR CONTINUATION.
14. EF-4.
15. PROCESS COOLING WATER EXPANSION TANK (ET-3).
16. LIMITS OF CHASE ABOVE.
17. PROCESS COOLING WATER AIR SEPARATOR (AS-3).
18. HOT WATER CIRCULATING PUMP (CP-2).
19. HOT WATER EXPANSION TANK (ET-2).
20. HOT WATER AIR SEPARATOR (AS-2).
21. HEX-1.
22. DOMESTIC HOT WATER GENERATOR (WH-1).
23. DOMESTIC WATER PRESSURE BOOSTER PUMP (BP-1).
24. EXHAUST DUCT UP TO SECOND FLOOR. FOR CONTINUATION, SEE SHEET M2.4.
25. SEE LOUVER SCHEDULE SHEET A7.3 FOR LENGTH AND HEIGHT OF LOUVER.

GRAPHIC SCALE

1:50 — 0 0.5 1 2 3 4 5m

REVISIONS

NO.	DESCRIPTION	DATE	APPROVED

CLARK NEXSEN
Architecture & Engineering
6160 Kempsville Circle, Suite 200A
Norfolk, Virginia 23502
757/455-5800
Fax 757/455-5638
http://www.clarknexsen.com

COMMONWEALTH OF VIRGINIA — No. 14090 — PROFESSIONAL ENGINEER

APPROVED
ACTIVITY - SATISFACTORY TO
DATE
APPROVED
FOR CTO FOR COMMANDER NAVFAC
DATE 3/8/99

FMD	DESIGN	CTO
LEW3	DRAWN	
JWA	REVIEW	E-in-C
DRH	QC	
CEC	CHIEF ARCH./ ENGR.	
	PROJECT MANAGER	
	FIRE PROTECTION	
	BRANCH MANAGER	
	DESIGN DIRECTOR	

DEPARTMENT OF THE NAVY — NAVAL FACILITIES ENGINEERING COMMAND — NAVAL STATION — ATLANTIC DIVISION — NORFOLK, VIRGINIA

FLEET TRAINING CENTER
ENGINEERING TRAINING FACILITY ADDITION

SECTIONS

CODE ID. NO. 80091 | SIZE D
SCALE: AS SHOWN
CTO NO. 495063
STA. PROJ. NO. P-179
SPEC. NO. 05-97-7065
CONSTR. CONTR. NO. N62470-97-B-7065
NAVFAC DRAWING NO. 4395063
SHEET 119 OF 174

M4.2

8 7 6 5 4 3 2 1

D C B A

AIR HANDLING UNIT SCHEDULE

MARK	LOCATION	SUPPLY FAN					DESIGN OA (L/s)	COOLING COIL										HEATING COIL ⑤								
		L/s	TSP (Pa)	ESP (Pa)	FAN MOTOR kW/(HP)	VOLT/ PHASE		COOLING		AIR TEMP °C				WATER TEMP °C		L/s	MAX. AIR PD (Pa)	MAX. WATER PD (kPa)	MAX. COIL FV (m/sec)	TOTAL HEATING (kW)	AIR TEMP °C		WATER TEMP °C		L/s	MAX AIR PD (Pa)	MAX WATER PD (kPa)	MAX COIL FV (m/sec)
								TOTAL kW	SENSIBLE kW	ENT. DB	ENT. WB	LVG. DB	LVG. WB	ENT	LVG						ENT. DB	LVG. DB	ENT.	LVG.				
AHU-1	RM 120	4050	1020	700	11.2(15)	480/3	1974	133.2	79.0	29.0	21.2	13.1	12.0	7	12	6.40	195	16.0	2.5	95.3	7.6	26.7	80	70	2.29	69	28	2.5
AHU-2	RM 120	2050	1000	687	5.6(7.5)	480/3	1220	76.5	43.5	30.0	22.2	12.8	11.8	7	12	3.68	186	14.0	2.5	55.3	4.8	26.7	80	70	2.29	59	6.5	2.5
AHU-3	RM 123	1500	923	500	3.7(5)	480/3	768/363	47.5	28.6	29.8	22.1	14.3	13.5	7	12	2.28	249	4.6	2.5	46.6	6.9	32.2	80	70	1.12	72	16.0	2.5
AHU-4	RM 123	1500	923	500	3.7(5)	480/3	768/363	47.5	28.6	29.8	22.1	14.3	13.5	7	12	2.28	249	4.6	2.5	46.6	6.9	32.2	80	70	1.12	72	16.0	2.5

AIR HANDLING UNIT SCHEDULE (CONTINUED)

MARK	RE-HEAT COIL									FILTER		VIBRATION ISOLATORS		NEMA STARTER SIZE	REMARKS
	TOTAL HEATING kW	AIR TEMP °C		WATER TEMP °C		WATER FLOW (L/s)	MAX AIR PD (Pa)	MAX WATER PD (kPa)	MAX COIL FV (m/sec)	TYPE	MAX AIR PD (Pa) AT CHANGE	TYPE	MIN DEFLECTION (mm)		
		ENT DB	LVG DB	ENT.	LVG.										
AHU-1	–	–	–	–	–	–	–	–	–	50mm THROWAWAY	249	S	25	2	①③④⑤⑦
AHU-2	–	–	–	–	–	–	–	–	–	50mm THROWAWAY	249	S	25	1	①③④⑤⑧
AHU-3	45.4	14.3	26.6	80	70	1.09	72	16.0	2.5	50mm THROWAWAY	249	S	25	0	①②⑤⑥⑨
AHU-4	45.4	14.3	26.6	80	70	1.09	72	16.0	2.5	50mm THROWAWAY	249	S	25	0	①②⑤⑥⑨

NOTE:

① EXTERNAL STATIC PRESSURE INCLUDES SUPPLY AND RETURN DUCTWORK, VAV BOX PRIMARY AIR VALVE, AIR DISTRIBUTION DEVICES, CASING AND FILTER LOSSES.

② HORIZONTAL DRAW THRU.

③ VERTICAL DRAW THRU.

④ FURNISH AHU TO SITE DISASSEMBLED INTO INDIVIDUAL SECTIONS AND FIELD ASSEMBLE.

⑤ PROVIDE FACE AND BYPASS DAMPER SECTION.

⑥ TWO POSITION OUTSIDE AIR DAMPER.

⑦ DESIGN OA INCLUDES 1898 L/S PER ASHRAE 62-89 AND AN ALLOWANCE OF 76 L/S FOR PRESSURIZATION.

⑧ DESIGN OA INCLUDES 1180 L/S PER ASHRAE 62-89 AND AN ALLOWANCE OF 40 L/S FOR PRESSURIZATION.

⑨ DESIGN OA INCLUDES 320 L/S PER ASHRAE 62-89 AND AN ALLOWANCE OF 43 L/S FOR PRESSURIZATION WITH WELDING HOODS OFF.

STEAM CONVERTOR SCHEDULE

MARK	TUBES SIDE					FOULING FACTOR	SHELL SIDE				REMARKS
	L/s	WATER ENT (°C)	WATER LVG (°C)	kW	MAX. PD (kPa)		ENT PRESSURE (kPa)	kg/hr	TRAP CAP. (kg/hr)	TRAP PRESSURE DIFFERENTIAL (kPa)	
HX-1	8.05	72.3	80	257.6	15.0	.04403	100	416.0	832.0	25	–

AIR COOLED CHILLER SCHEDULE

MARK	MIN. CAPACITY (kW)	CONDENSER			EVAPORATOR					COMPRESSOR MOTOR				TOTAL UNIT MCA	REMARKS
		ENT. AIR TEMP. (°C)	NUMBER OF FANS	FAN MOTOR (FLA) EA	WATER TEMP. (°C) ENT.	WATER TEMP. (°C) LVG.	L/s	MAX. PD (kPa)	FOULING FACTOR (HR)(SQ. m)(°C)/W	RLA EA	MAX. kW	VOLT/PHASE	STARTER TYPE		
ACC-1	280.1	35.0	4	3.4	11.55	7	14.8	47.7	.04403	③	98.1	480/3	WYE-DELTA	202	①②

NOTE:

① PROVIDE WITH LOW AMBIENT CONTROL.

② PROVIDE TYPE "F" VIBRATION ISOLATION BETWEEN CHILLER AND CONCRETE PAD.

③ 1 COMPRESSOR AT 97 RLA, 1 COMPRESSOR AT 67.1 RLA

CLOSED CIRCUIT COOLER SCHEDULE

MARK	KW	L/S	WATER TEMP. (°C)		ENT. AIR	FAN MOTOR			SPRAY PUMP MOTOR		COIL Kpa	SUMP HEATER (KW)	PIPE SIZES			REMARKS
			ENT.	LVG.	°C WB	KW/(HP)	RPM	VOLT/PHASE	KW/(HP)	VOLT/PHASE			CW MAKE-UP	DRAIN	OVERFLOW	
CCC-1	283.7	12.4	35	29.5	25.6	3.7(5)	1750	480/3	1.5(2)	480/3	14.6	6	20	50	80	–
CCC-2	283.7	12.4	35	29.5	25.6	3.7(5)	1750	480/3	1.5(2)	480/3	14.6	6	20	50	80	–

DESIGN CONDITIONS

SUMMER (MAIN BUILDING)	OUTDOOR	32.8°C DB/24.4°C WB
	INDOOR	24.4°C DB/50% RH
SUMMER (ACR LAB)	OUTDOOR	32.8°C DB/24.4°C WB
	INDOOR	26.6°C DB/50% RH
WINTER	OUTDOOR	-5.5°C DB
	INDOOR	20°C DB
		13°C DB (MECHANICAL AND ELECTRICAL SPACE)

REVISIONS

NO.	DESCRIPTION	DATE	APPROVED

CLARK•NEXSEN
Architecture & Engineering
6160 Kempsville Circle, Suite 200A
Norfolk, Virginia 23502
757/455-5800
Fax 757/455-5638
http://www.clarknexsen.com

COMMONWEALTH OF VIRGINIA — ENGINEER — No. 14090 — 12/21/99 — PROFESSIONAL

APPROVED
ACTMTY - SATISFACTORY TO
DATE
APPROVED
FOR EFD FOR COMMANDER NAVFAC
DATE 3/18/99

FMD	DESIGN
LEW3	DRAWN
JWA	REVIEW
DRH	QC
CEC	CHIEF ARCH/ ENGR.
	PROJECT MANAGER
	FIRE PROTECTION
	BRANCH MANAGER
	DESIGN DIRECTOR

EFD

DEPARTMENT OF THE NAVY
NAVAL FACILITIES ENGINEERING COMMAND
ATLANTIC DIVISION
NAVAL STATION NORFOLK, VIRGINIA
FLEET TRAINING CENTER NORFOLK, VIRGINIA
ENGINEERING TRAINING FACILITY ADDITION
SCHEDULES

CODE ID. NO. 80091 SIZE D
SCALE: AS SHOWN
EFD NO. 495064
STA PROJ. NO. P-179
SPEC. NO. 05-97-7065
CONSTR. CONTR. NO. N62470-97-B-7065
NAVFAC DRAWING NO. 4395064
SHEET 120 OF 174

M5.1

8 7 6 5 4 3 2 1

D C B A

VALVE SCHEDULE

EQUIPMENT	SERVICE	FLOW (L/s)	CONTROL VALVE			BALANCING VALVE		
			DIFFERENTIAL PRESSURE (kPa)	SIZE (mm)	VALVE KVS *	DIFFERENTIAL PRESSURE (kPa)	SIZE (mm)	VALVE KVS *
AHU-1	CHILLED WATER	6.4	16.0	80	3.32 ②④	30.2	65	2.42
AHU-2	CHILLED WATER	3.68	14.0	65	2.04 ②④	31.4	50	1.38
AHU-3	CHILLED WATER	2.28	4.6	50	2.21 ②④	35.9	40	0.79
AHU-4	CHILLED WATER	2.28	4.6	50	2.21 ②④	35.9	40	0.79
AHU-1	HOT WATER	2.29	28	50	.9 ②④	12.0	50	1.38
AHU-2	HOT WATER	1.33	6.5	40	1.08 ②④	11.1	40	0.83
AHU-3	HOT WATER PH	1.12	16.0	40	.58 ②④	23.9	32	0.48
AHU-4	HOT WATER PH	1.12	16.0	40	.58 ②④	22.7	32	0.48
AHU-3	HOT WATER RH	1.09	16.0	40	.57 ②③	23.6	32	0.47
AHU-4	HOT WATER RH	1.09	16.0	40	.57 ②③	23.6	32	0.47
CW BYPASS	CHILLED WATER	3.7	30	50	2.43 ①④	30.8	50	1.39
HW BYPASS	HOT WATER	2.1	30	40	1.38 ①④	29.3	40	0.81
FCU-1	CHILLED WATER	.05	2.5	20	.07 ②③	5.4	15	0.04
FCU-2	CHILLED WATER	.05	2.5	20	.07 ②③	5.4	15	0.04
FCU-3	CHILLED WATER	.05	2.5	20	.07 ②③	5.4	15	0.04
VAV 1-1	HOT WATER	.15	17	20	.07 ②③	12.0	20	0.09
VAV 1-2	HOT WATER	.08	5.4	20	.12 ②③	3.9	20	0.08
VAV 1-3	HOT WATER	.08	5.0	20	.07 ②③	3.9	20	0.08
VAV 1-4	HOT WATER	.07	3.8	20	.13 ②③	5.4	20	0.06
VAV 1-5	HOT WATER	.08	5.0	20	.13 ②③	3.9	20	0.08
VAV 1-6	HOT WATER	.04	1.5	20	.12 ②③	3.0	15	0.05
VAV 1-7	HOT WATER	.10	7.8	20	.13 ②③	5.1	20	0.09
VAV 2-1	HOT WATER	.15	17.0	20	.13 ②③	11.7	20	0.09
VAV 2-2	HOT WATER	.06	2.8	20	.13 ②③	8.7	15	0.04
VAV 2-3	HOT WATER	.05	2.1	20	.12 ②③	3.4	15	0.04
VAV 2-4	HOT WATER	.08	5.4	20	.12 ②③	3.6	20	0.09
VAV 2-5	HOT WATER	.08	5.0	20	.13 ②③	3.6	20	0.09
VAV 2-6	HOT WATER	.04	1.5	20	.12 ②③	3.0	15	0.05
VAV 2-7	HOT WATER	.07	3.8	20	.13 ②③	5.4	20	0.06
VAV 2-8	HOT WATER	.07	3.8	20	.13 ②③	5.4	20	0.06
VAV 2-9	HOT WATER	.07	3.8	20	.13 ②③	5.4	20	0.06
VAV 2-10	HOT WATER	.05	2.1	20	.12 ②③	5.4	15	0.04
VAV 3-1	HOT WATER	.17	20.9	20	.13 ②③	13.7	20	0.10
VAV 3-2	HOT WATER	.04	1.5	20	.12 ②③	3.0	15	0.05
VAV 3-3	HOT WATER	.03	1.5	20	.09 ②③	6.3	15	0.02
VAV 3-4	HOT WATER	.07	3.8	20	.13 ②③	5.4	20	0.06
VAV 3-5	HOT WATER	.07	3.8	20	.13 ②③	5.4	20	0.06
VAV 3-6	HOT WATER	.05	2.1	20	.12 ②③	5.4	15	0.04
VAV 3-7	HOT WATER	.03	1.5	20	.09 ②③	6.3	15	0.02
VAV 3-8	HOT WATER	.03	1.5	20	.09 ②③	6.3	15	0.02
VAV 3-9	HOT WATER	.08	5.4	20	.12 ②③	3.6	2	0.09
VAV 3-10	HOT WATER	.05	2.1	20	.12 ②③	5.4	15	0.04
VAV 3-11	HOT WATER	.04	1.5	20	.12 ②③	3.0	15	0.05
VAV 3-12	HOT WATER	.03	1.5	20	.09 ②③	6.3	15	0.02

NOTES:

* L/S @ 1 kPa ΔP

① THREE-WAY

② TWO-WAY

③ MODULATING

④ TWO POSITION

FAN POWERED VARIABLE AIR VOLUME TERMINAL UNIT SCHEDULE

MARK	ROOM NO.	FAN CAPACITY		FAN MOTOR			VOL. REG. (L/s)		MIN. INLET SP (Pa)	MAXIMUM DESIGN NOISE LEVEL (NC) (ROOM)	INLET SIZE	HEATING COIL					REMARKS
		L/s	ESP (Pa)	FLA MAX	MOTOR WATTS	VOLT/PHASE	MIN.	MAX.				MIN. HEATING (W)	L/s	MAX. WPD (kPa)	EAT °C	LAT °C	MAX. AIR PD (Pa)	
VAV 1-1	107	540	85	3.9	560	277/1	200	540	25	35	306ø	6111	.15	17.0	18.2	27.4	35	Ⓣ
VAV 1-2	108	290	70	2.6	375	277/1	160	290	25	35	250ø	3299	.08	5.4	17.4	26.6	19	Ⓣ
VAV 1-3	109	280	80	1.6	187	277/1	160	280	25	35	200ø	3218	.08	5.0	17.3	26.6	22	Ⓣ
VAV 1-4	111	260	70	1.6	187	277/1	160	260	25	35	200ø	3055	.07	3.8	17.0	26.6	20	Ⓣ
VAV 1-5	112	280	75	1.6	187	277/1	160	280	25	35	200ø	3218	.08	5.0	17.3	26.6	22	Ⓣ
VAV 1-6	119	160	60	0.6	75	277/1	56	160	25	35	150ø	1811	.04	1.5	18.3	27.5	11	Ⓣ
VAV 1-7	118	380	90	2.6	375	277/1	110	380	25	35	250ø	4300	.10	7.8	18.6	27.8	29	Ⓣ
VAV 2-1	205	540	90	3.9	560	277/1	200	540	25	35	300ø	6111	.15	17.0	18.2	27.4	35	Ⓣ
VAV 2-2	206	230	95	1.6	187	277/1	80	230	25	35	200ø	2603	.06	2.8	18.3	27.5	20	Ⓣ
VAV 2-3	207	200	95	1.6	187	277/1	80	200	25	35	200ø	2263	.05	2.1	18.1	27.3	20	Ⓣ
VAV 2-4	208	295	75	2.6	375	277/1	170	295	25	35	250ø	3339	.08	5.4	17.2	26.4	19	Ⓣ
VAV 2-5	209	280	75	1.6	187	277/1	160	280	25	35	200ø	3218	.08	5.0	17.3	26.6	22	Ⓣ
VAV 2-6	220	140	60	0.6	75	277/1	56	140	25	35	150ø	1584	.04	1.5	18.1	22.3	10	Ⓣ
VAV 2-7	223	260	75	1.6	187	277/1	70	260	25	35	200ø	2942	.07	3.8	18.7	27.9	20	Ⓣ
VAV 2-8	223	260	75	1.6	187	277/1	70	260	25	35	200ø	2942	.07	3.8	18.7	27.9	20	Ⓣ
VAV 2-9	223	260	75	1.6	187	277/1	70	260	25	35	200ø	2942	.07	3.8	18.7	27.9	20	Ⓣ
VAV 2-10	203	180	75	0.6	75	277/1	40	180	25	35	150ø	2037	.05	2.1	18.9	28.1	13	Ⓣ
VAV 3-1	307	600	95	3.9	560	277/1	240	600	25	35	300ø	6937	.17	20.9	18.0	27.4	43	Ⓣ
VAV 3-2	308	120	55	0.6	75	277/1	120	120	25	35	150ø	1712	.04	1.5	15.0	26.6	10	Ⓣ
VAV 3-3	309	100	55	0.6	75	277/1	50	100	25	35	150ø	1156	.03	1.5	17.5	26.9	10	Ⓣ
VAV 3-4	310	260	95	1.6	187	277/1	88	260	25	35	200ø	3006	.07	3.8	18.3	27.7	20	Ⓣ
VAV 3-5	311	240	80	1.6	187	277/1	88	240	25	35	200ø	2775	.07	3.8	18.2	27.6	20	Ⓣ
VAV 3-6	312	165	65	0.6	75	277/1	54	165	25	35	150ø	1908	.05	2.1	18.4	27.8	12	Ⓣ
VAV 3-7	312	120	60	0.6	75	277/1	44	120	25	35	150ø	1387	.03	1.5	18.2	27.6	10	Ⓣ
VAV 3-8	320	120	55	0.6	75	277/1	60	120	25	35	150ø	1387	.03	1.5	17.5	26.9	10	Ⓣ
VAV 3-9	321	290	65	2.6	375	277/1	168	290	25	35	250ø	3387	.08	5.4	17.1	26.6	19	Ⓣ
VAV 3-10	326	177	70	0.6	75	277/1	120	177	25	35	150ø	2175	.05	2.1	16.6	26.6	12	Ⓣ
VAV 3-11	327	128	55	0.6	75	277/1	88	128	25	35	150ø	1580	.04	1.5	16.6	26.6	10	Ⓣ
VAV 3-12	303	120	60	0.6	75	277/1	60	120	25	35	150ø	1387	.03	1.5	17.5	26.9	10	Ⓣ

NOTES:

1. Ⓣ INDICATES THERMOSTAT CONTROL.
2. HEATING COIL CAPACITY BASED ON 80°C EWT WITH 10°C WATER TEMPERATURE DROP.
3. EQUIVALENT ROUND DUCT IS ACCEPTABLE WHERE FLAT OVAL IS INDICATED.
4. THE HEATING COIL ENTERING AND LEAVING AIR TEMPERATURES WERE CALCULATED BASED ON THE COIL BEING IN THE HEATING MODE WITH THE PRIMARY AIR VALVE AT ITS MINIMUM POSITION.

AIR INTAKE / EXHAUST HOOD SCHEDULE

MARK	LOCATION	MAX. AIR FLOW (L/S)	THROAT SIZE	MAX. PD @ MAX (L/S) pa	FREE AREA m^2	REMARKS
RH-1	ROOF 123A	1450	400ø	25	N/A	SMACNA "APIDC"
IH-1	ROOF 123A	768	600X600	25	0.33	--

REVISIONS

DESCRIPTION	DATE	APPROVED
ITAL		

CLARK•NEXSEN
Architecture & Engineering
6160 Kempsville Circle, Suite 200A
Norfolk, Virginia 23502
757/455-5800
Fax 757/455-5638
http://www.clarknexsen.com

COMMONWEALTH OF VIRGINIA ENGINEER No. 14050 PROFESSIONAL 2/18/99

APPROVED

ACTIVITY - SATISFACTORY TO

DATE

APPROVED

FOR EFD FOR COMMANDER NAVFAC

DATE 3/19/99

		EFD
FMD	DESIGN	
LEW3	DRAWN	
JWA	REVIEW	
DRH	QC	
CEC	CHIEF ARCH./ ENGR.	
	PROJECT MANAGER	
	FIRE PROTECTION	
	BRANCH MANAGER	
	DESIGN DIRECTOR	

DEPARTMENT OF THE NAVY
NAVAL STATION
ATLANTIC DIVISION
NAVAL FACILITIES ENGINEERING COMMAND
NORFOLK, VIRGINIA

FLEET TRAINING CENTER
NORFOLK, VIRGINIA
ENGINEERING TRAINING FACILITY ADDITION

SCHEDULES

CODE ID. NO. 80091 | SIZE D
SCALE: AS SHOWN
EFD NO. 495065
STA. PROJ. NO. P-179
SPEC. NO. 05-97-7065
CONSTR. CONTR. NO. N62470-97-B-7065
NAVFAC DRAWING NO. 4395065
SHEET 121 OF 174

M5.2

8 | 7 | 6 | 5 | 4 | 3 | 2 | 1

D C B A

DIFFUSER AND REGISTER SCHEDULE

MARK	SERVICE	MAXIMUM (L/s)	MAX NC (dba)	MAX SP (Pa)	NECK SIZE (mm)	SHELL SIZE (mm)	TYPE	THROW (m)	DIRECTION OF BLOW	REMARKS
CD-1	SUPPLY	155	30	11	300X300	600X600	LOUVER FACE	2.5	4-WAY	.
CD-2	SUPPLY	70	30	11	225X225	600X600	LOUVER FACE	2.5	4-WAY	.
CD-3	SUPPLY	40	30	11	150X150	600X600	LOUVER FACE	2.5	4-WAY	.
CD-4	SUPPLY	95	30	19	225X225	600X600	LOUVER FACE	2.0	4-WAY	.
CD-5	SUPPLY	55	30	30	150X150	600X600	LOUVER FACE	2.0	4-WAY	.
SR-1	SUPPLY	125	30	35	300X150	-	DBL. DEFLECTION VERTICAL	5.0	15°	.
SR-2	SUPPLY	105	30	35	200X200	-	DBL. DEFLECTION VERTICAL	5.0	15°	.
RR-1	RETURN	540	30	8	600X600	-	EGG CRATE	-	-	.
RR-2	RETURN	274	30	12	300X300	-	EGG CRATE	-	-	.
RR-3	RETURN	138	30	8	250X250	-	EGG CRATE	-	-	.
RR-4	RETURN	68	30	17	150X150	-	EGG CRATE	-	-	.
RR-5	RETURN	732	35	13	900X450	-	HD. ALUM	-	-	.
ER-1	EXHAUST	60	30	8	200X200	-	EGG CRATE	-	-	.
ER-2	EXHAUST	285	30	8	250X250	-	EGG CRATE	-	-	.
ER-3	EXHAUST	45	30	12	150X150	-	EGG CRATE	-	-	.
ER-4	EXHAUST	1215	40	31	600X600	-	EGG CRATE	-	-	.
TR-1	TRANSFER	85	30	8	200X200	-	EGG CRATE	-	-	.
TR-2	TRANSFER	285	30	17	300X300	-	EGG CRATE	-	-	.

AIR SEPARATOR SCHEDULE

MARK	L/S	MAX. WPD (kPa)	NOM. PIPE CONN. SIZE (mm)	MARK	TANK SIZE		TYPE	AIR CHARGE (kPa)	CONFIGURATION	APPROX. DIMEN. (DIA X HEIGHT)	LOCATION	REMARKS
					VOL. LITERS	ACCEPT. LITERS						
AS-1	14.8	5	100	ET-1	30	19	CA	180	FLOOR MOUNTED VERTICAL	350X650	ROOM 120	-
AS-2	8.05	5	80	ET-2	84	45	CA	180	FLOOR MOUNTED VERTICAL	400X1035	ROOM 120	-
AS-3	24.8	5	150	ET-3	125	75	CA	100	FLOOR MOUNTED VERTICAL	400X1400	ROOM 120	-

NOTES:
CA = CAPTIVE AIR DIAPHRAGM TYPE

PUMP SCHEDULE

MARK	LOCATION	SERVICE	FLOW (L/s)	HEAD (kPa)	TYPE	MOTOR			NEMA STARTER SIZE	REMARKS
						kW(HP)	RPM	VOLT/PHASE		
CP-1	ROOM 120	CHILLED WATER	14.8	140	BASE MOUNTED END SUCTION	5.6(7.5)	1750	480/3	1	SECONDARY LOOP
CP-2	ROOM 120	HOT WATER	8.05	160	BASE MOUNTED END SUCTION	5.6(7.5)	1750	480/3	1	-
CP-3	ROOM 120	PROCESS WATER	12.4	220	BASE MOUNTED END SUCTION	5.6(7.5)	1750	480/3	1	-
CP-4	ROOM 120	PROCESS WATER	12.4	220	BASE MOUNTED END SUCTION	5.6(7.5)	1750	480/3	1	-
CP-5	ROOM 120	CHILLED WATER	14.8	100	BASE MOUNTED END SUCTION	3.7(5)	1750	480/3	0	ACC-1

REVISIONS

DESCRIPTION	DATE	APPROVED

CLARK•NEXSEN
Architecture & Engineering
6160 Kempsville Circle, Suite 200A
Norfolk, Virginia 23502
757/455-5800
Fax 757/455-5638
http://www.clarknexsen.com

COMMONWEALTH OF VIRGINIA — No. 14090 — PROFESSIONAL ENGINEER — 2/18/99

APPROVED
ACTIVITY - SATISFACTORY TO
DATE
APPROVED
FOR EFD FOR COMMANDER NAVFAC
DATE 3/8/99

EFD
FMD DESIGN
LEW3 DRAWN
JWA REVIEW
DRH QC
CEC CHIEF ARCH./ ENGR.
PROJECT MANAGER
FIRE PROTECTION
BRANCH MANAGER
DESIGN DIRECTOR

DEPARTMENT OF THE NAVY
NAVAL STATION
ATLANTIC DIVISION
NAVAL FACILITIES ENGINEERING COMMAND
NORFOLK, VIRGINIA
FLEET TRAINING CENTER
NORFOLK, VIRGINIA
ENGINEERING TRAINING FACILITY ADDITION
SCHEDULES

CODE ID. NO. 80091 SIZE D
SCALE: AS SHOWN
EFD NO. 495066
STA. PROJ. NO. P-179
SPEC. NO. 05-97-7065
CONSTR. CONTR. NO. N62470-97-B-7065
NAVFAC DRAWING NO. 4395066
SHEET 122 OF 174
M5.3

8 7 6 5 4 3 2 1
D C B A

FAN COIL UNIT SCHEDULE

MARK	LOCATION	L/S @MED SPEED	MAXIMUM EXT. SP (Pa)	COOLING COIL							MOTOR		TYPE	REMARKS
				ENT. AIR		ENT. WATER (°C)	FLOW (L/S)	PD (KPa)	CAPACITY		WATTS	VOLT/PHASE		
				°C DB	°C WB				TOTAL KW	SEN. KW				
FCU-1	RM-115	150	0	24.4	17.3	7	.05	.25	1.3	1.0	85	120/1	①	②
FCU-2	RM-215	150	0	24.4	17.3	7	.05	.25	1.3	1.0	85	120/1	①	②
FCU-3	RM-315	150	0	24.4	17.3	7	.05	.25	1.3	1.0	85	120/1	①	②

NOTES:

① HORIZONTAL CASSETTE

② CAPACITY SHALL BE SELECTED AT MEDIUM FAN SPEED.

WALL FINNED RADIATION SCHEDULE

MARK	CAPACITY (WATTS)	MINIMUM ELEMENT LENGTH (m)	ENCLOSURE LENGTH (m)	(L/s)	SHEET REFERENCE
WF-1	1800	1.8 ②	1.9	.03	M2.2
WF-2	850	1.0 ①	1.2	.03	M2.2
WF-3	850	1.0 ①	1.2	.03	M2.8

NOTES:

① CAPACITY BASED ON 600 W/m WITH 80°C EWT.

② CAPACITY BASED ON 984 W/m WITH 80°C EWT, 2 ROW ELEMENT

HOT WATER UNIT HEATER SCHEDULE

MARK	LOCATION	TYPE UNIT	MIN. HEATING CAPACITY (kW)	AIR FLOW (L/s)	ENT TEMP °C		WATER FLOW (L/s)	MAX. WATER PD (kPa)	MOUNTING HEIGHT AFF (m)	MIN. THROW (m)	MOTOR		REMARKS
					AIR	WATER					WATTS	VOLT/PHASE	
UH-1	RM-120	PROP. HORIZ.	2500	110	13.0	80	0.06	1.2	2.75	5.0	30	120/1	–
UH-2	RM-122	PROP. HORIZ.	2500	110	13.0	80	0.06	1.2	2.75	4.0	30	120/1	–

DUCT CONSTRUCTION AND LEAK DETECTION SCHEDULE

MARK	DUCT PRESSURE CLASS (Pa)				DUCT SEAL CLASS	DUCT LEAK CLASS ③	DUCT TEST PRESSURE	DUCT TEST TYPE	REMARKS
	SUPPLY DUCT	RETURN DUCT	EXHAUST DUCT	OUTSIDE AIR DUCT					
AHU-1,2	750	-250	–	–	B	3.05, 6.10	750	①	②
AHU-3,4	125	-125	–	-125	B	6.10, 6.10	750	①	②
VAV'S	125	–	–	–	C	12.19	–	①	②
EF'S	–	–	-125	–	C	12.19	–	①	②
FAF'S	250	–	–	-125	C	12.19	–	①	②

NOTES:

① TEST PER SMACNA HVACADLTM, FIRST EDITION.

② DUCT LEAKAGE CLASS EXPRESSED IN LITERS PER SECOND PER 10 SQUARE METERS.

③ ROUND/FLAT OVAL, RECTANGULAR

FAN SCHEDULE

MARK	LOCATION	TYPE	FAN		ESP Pa	MOTOR		NEMA STARTER SIZE	VIBRATION ISOLATORS	REMARKS
			L/s	RPM		kW(HP)	VOLT/PHASE		TYPE	
EF-1	ROOF	POWER ROOF VENTILATOR	360	1084	125	0.37(0.5)	480/3	0	NA	TOILET EXHAUST ② ④
EF-2	ROOF	POWER ROOF VENTILATOR	384	1107	125	0.37(0.5)	480/3	0	NA	GENERAL EXHAUST ② ④
EF-3	ROOF	POWER ROOF VENTILATOR	151	1313	125	0.15(0.2)	120/1	0	NA	GENERAL EXHAUST ② ④
EF-4	RM-120	IN-LINE CABINET	923	872	125	0.37(0.5)	480/3	0	H	PLENUM RELIEF ③
EF-5	ROOF	POWER ROOF VENTILATOR	978	684	80	0.25(0.33)	120/1	0	NA	PLENUM RELIEF ②
EF-6	RM-120	IN-LINE CABINET	285	996	140	0.09(0.125)	120/1	0	H	ELEVATOR EQUIPMENT ROOM ③
EF-7	RM-122	IN-LINE CABINET	1020	664	125	0.37(0.5)	480/3	0	H	ELECTRICAL EQUIPMENT ROOM EXHAUST ③
EF-8	RM-120	IN-LINE CABINET	1215	703	125	0.56(0.75)	480/3	0	H	MECHANICAL EQUIPMENT ROOM EXHAUST ③
EF-9	ROOF	POWER ROOF VENTILATOR	1055	696	90	0.37(0.5)	480/3	0	NA	REFRIGERANT PURGE ② ⑤
EF-10	ROOF	POWER ROOF VENTILATOR	1500	543	125	0.37(0.5)	480/3	0	NA	REFRIGERANT PURGE ② ⑤
EF-11	RM-123	UTILITY BLOWER	1450	2002	747	2.2(3.0)	480/3	0	H	BRAZING HOOD EXHAUST
EF-12	ROOF	POWER ROOF VENTILATOR	320	1236	50	0.28(0.37)	120/1	0	NA	ACR GENERAL EXHAUST ② ⑤
EF-13	ROOF	POWER ROOF VENTILATOR	320	1236	50	0.28(0.37)	120/1	0	NA	ACR GENERAL EXHAUST ② ⑤
FAF-1	RM-120	IN-LINE CABINET	1974	624	180	1.12(1.5)	480/3	0	H	OA MAKE-UP AHU-1 ③ ① ④
FAF-2	RM-120	IN-LINE CABINET	1220	624	180	0.54(0.75)	480/3	0	H	OA MAKE-UP AHU-2 ③ ① ④

NOTES:

① PROVIDE ACOUSTICALLY LINED HOUSING.

② ALL POWER ROOF VENTILATORS SHALL BE PROVIDED WITH PREFABRICATED ALUMINUM CURB, DISCONNECT SWITCH, BACKDRAFT DAMPER AND BIRD SCREEN.

③ INLINE FANS SHALL BE PROVIDED WITH DISCONNECT SWITCH AND BACKDRAFT DAMPER.

④ PROVIDE SOLID STATE SPEED CONTROLLER.

⑤ PROVIDE UPBLAST TYPE EXHAUST FAN.

REVISIONS

DESCRIPTION	DATE	APPROVED
ADDENDUM 1	12/99	

CLARK NEXSEN
Architecture & Engineering
6160 Kempsville Circle, Suite 200A
Norfolk, Virginia 23502
757/455-5800
Fax 757/455-5638
http://www.clarknexsen.com

COMMONWEALTH OF VIRGINIA — ENGINEER — No. 14090 — PROFESSIONAL — 12/99

APPROVED

ACTIVITY – SATISFACTORY TO

DATE

APPROVED

FOR CTO FOR COMMANDER NAVFAC

DATE 2/2/99

FMD	DESIGN
LEW3	DRAWN
JWA	REVIEW
DRH	QC
CEC	CHIEF ARCH./ ENGR.

PROJECT MANAGER

FIRE PROTECTION

BRANCH MANAGER

DESIGN DIRECTOR

DEPARTMENT OF THE NAVY
NAVAL STATION
ATLANTIC DIVISION
NAVAL FACILITIES ENGINEERING COMMAND
NORFOLK, VIRGINIA
FLEET TRAINING CENTER
NORFOLK, VIRGINIA
ENGINEERING TRAINING FACILITY ADDITION
SCHEDULES

CODE ID. NO. 80091	SIZE D
SCALE:	AS SHOWN
CTO NO.	495067
STA. PROJ. NO.	P-179
SPEC. NO.	05-97-7065
CONSTR. CONTR. NO.	N62470-97-B-7065
NAVFAC DRAWING NO.	4395067
SHEET	123 OF 174

M5.4

8 7 6 5 4 3 2 1

D C B A

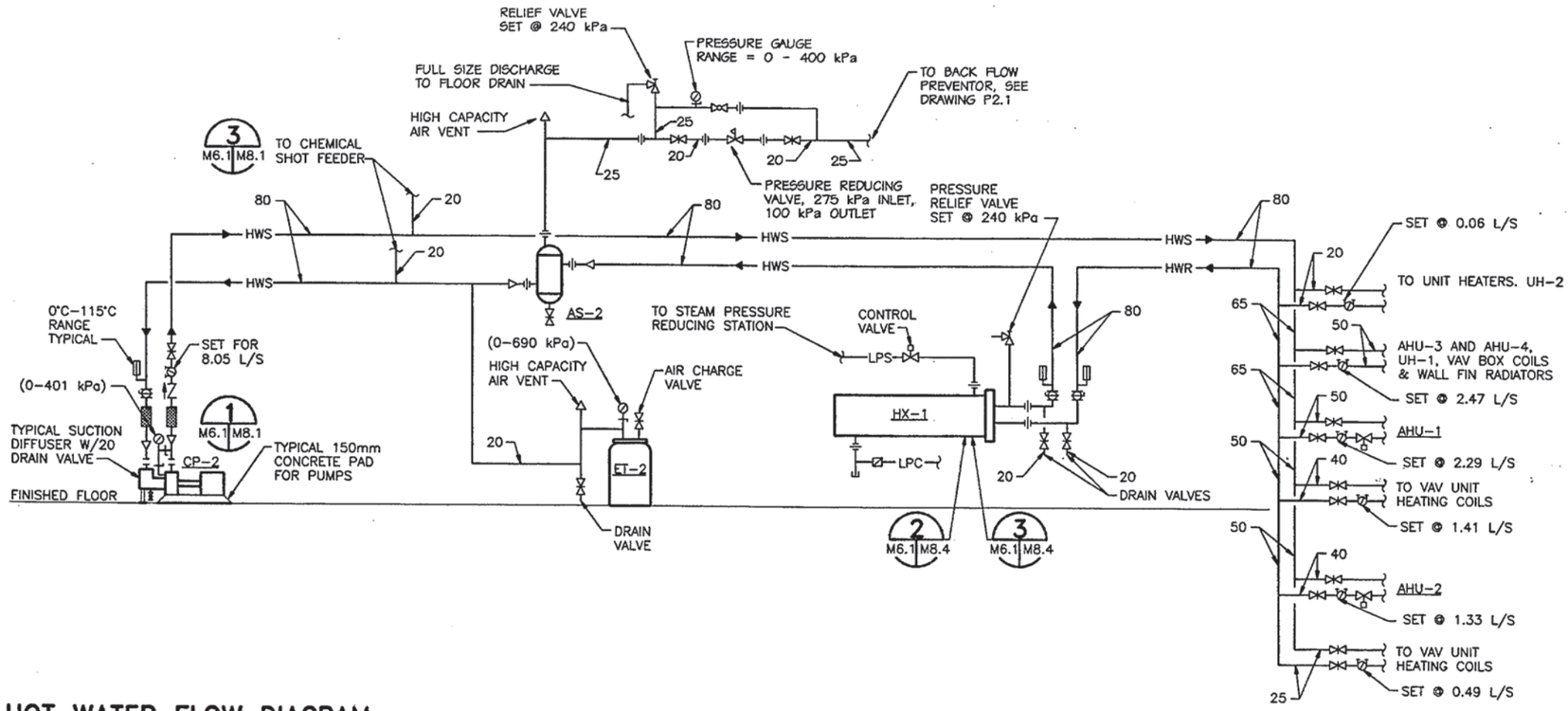

HOT WATER FLOW DIAGRAM

NO SCALE

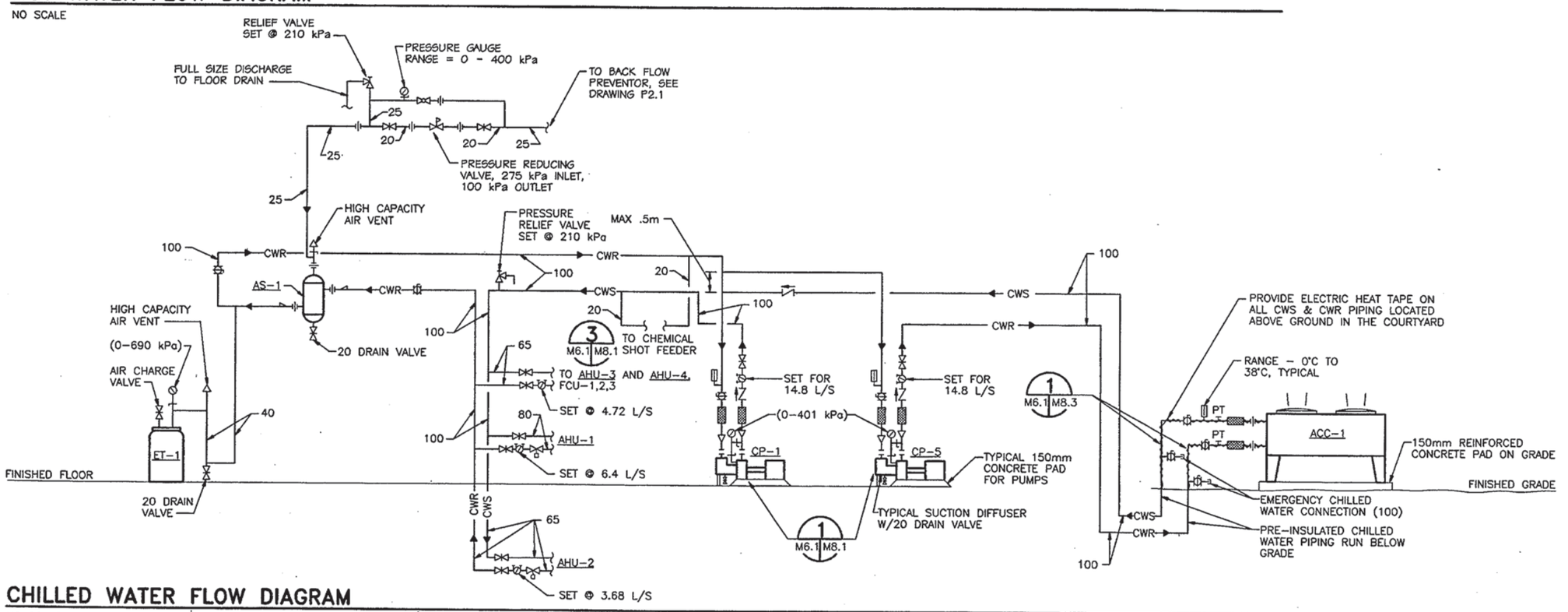

CHILLED WATER FLOW DIAGRAM

NO SCALE

REVISIONS

CLARK·NEXSEN
Architecture & Engineering
6160 Kempsville Circle, Suite 200A
Norfolk, Virginia 23502
757/455-5800
Fax 757/455-5638
http://www.clarknexsen.com

COMMONWEALTH OF VIRGINIA
PROFESSIONAL ENGINEER
No. 14099
2/18/99

APPROVED
ACTIVITY - SATISFACTORY TO
DATE
APPROVED
FOR EFD FOR COMMANDER NAVFAC
DATE 3/8/99

		EFD
FMD	DESIGN	
LEW3	DRAWN	
JWA	REVIEW	ETC
DRH	QC	
CEC	CHIEF ARCH./ ENGR.	
PROJECT MANAGER		
FIRE PROTECTION		
BRANCH MANAGER		
DESIGN DIRECTOR		

DEPARTMENT OF THE NAVY
NAVAL FACILITIES ENGINEERING COMMAND
ATLANTIC DIVISION
NAVAL STATION NORFOLK, VIRGINIA
FLEET TRAINING CENTER
ENGINEERING TRAINING FACILITY ADDITION
HOT WATER AND CHILLED WATER FLOW DIAGRAMS

CODE ID. NO. 80091 SIZE D
SCALE AS SHOWN
EFD NO. 495068
STA. PROJ. NO. P-179
SPEC. NO. 05-97-7065
CONSTR. CONTR. NO. N62470-97-B-7065
NAVFAC DRAWING NO. 4395068
SHEET 124 OF 174
M6.1

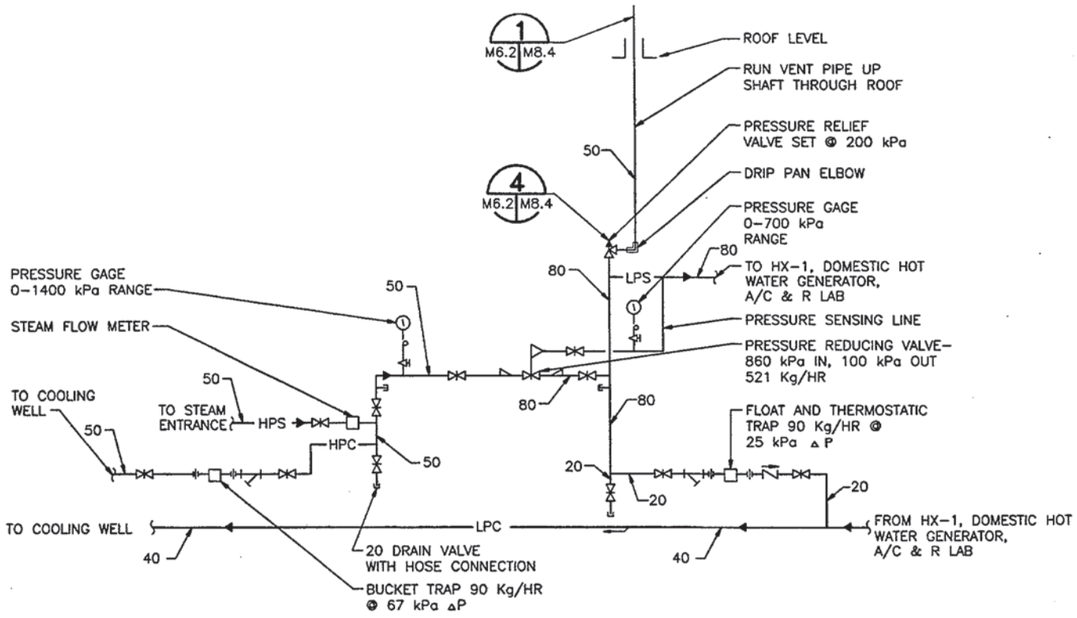

STEAM PIPING FLOW DIAGRAM

NO SCALE

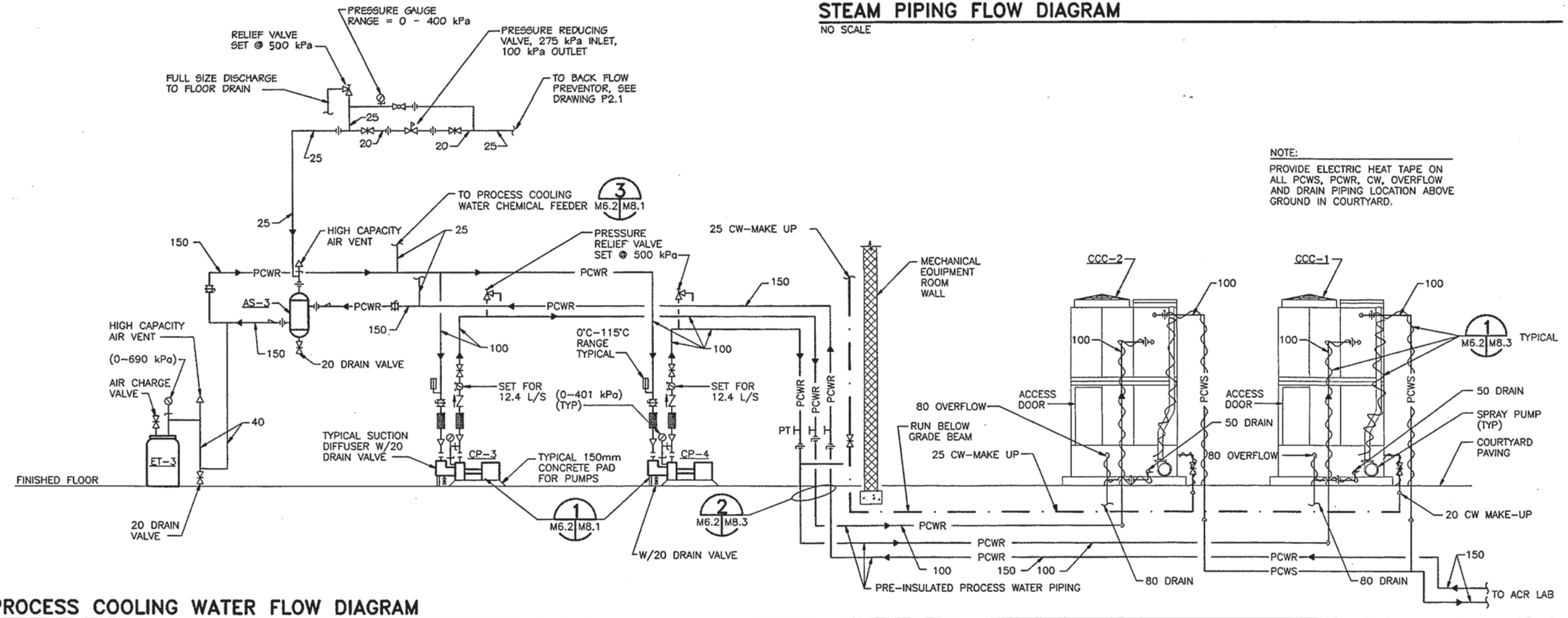

NOTE:
PROVIDE ELECTRIC HEAT TAPE ON ALL PCWS, PCWR, CW, OVERFLOW AND DRAIN PIPING LOCATION ABOVE GROUND IN COURTYARD.

PROCESS COOLING WATER FLOW DIAGRAM

NO SCALE

REVISIONS

CLARK·NEXSEN
Architecture & Engineering
6160 Kempsville Circle, Suite 200A
Norfolk, Virginia 23502
757/455-5800
Fax 757/455-5638
http://www.clarknexsen.com

COMMONWEALTH OF VIRGINIA
No. 14090
2/18/99
PROFESSIONAL ENGINEER

APPROVED
ACTIVITY - SATISFACTORY TO
DATE
APPROVED
FOR EFD FOR COMMANDER NAVFAC
DATE 3/8/99
FMD DESIGN
LEW3 DRAWN
JWA REVIEW
DRH QC
CEC CHIEF ARCH/ ENGR.
PROJECT MANAGER
FIRE PROTECTION
BRANCH MANAGER
DESIGN DIRECTOR

DEPARTMENT OF THE NAVY
NAVAL STATION
NAVAL FACILITIES ENGINEERING COMMAND
ATLANTIC DIVISION
NORFOLK, VIRGINIA
FLEET TRAINING CENTER
NORFOLK, VIRGINIA
ENGINEERING TRAINING FACILITY ADDITION
STEAM AND PROCESS COOLING WATER FLOW DIAGRAMS

CODE ID. NO. 80091 SIZE D
SCALE: AS SHOWN
EFD NO. 495069
STA. PROJ. NO. P-179
SPEC. NO. 05-97-7065
CONSTR. CONTR. NO. N62470-97-B-7065
NAVFAC DRAWING NO. 4395069
SHEET 125 OF 174
M6.2

FLEET TRAINING CENTER

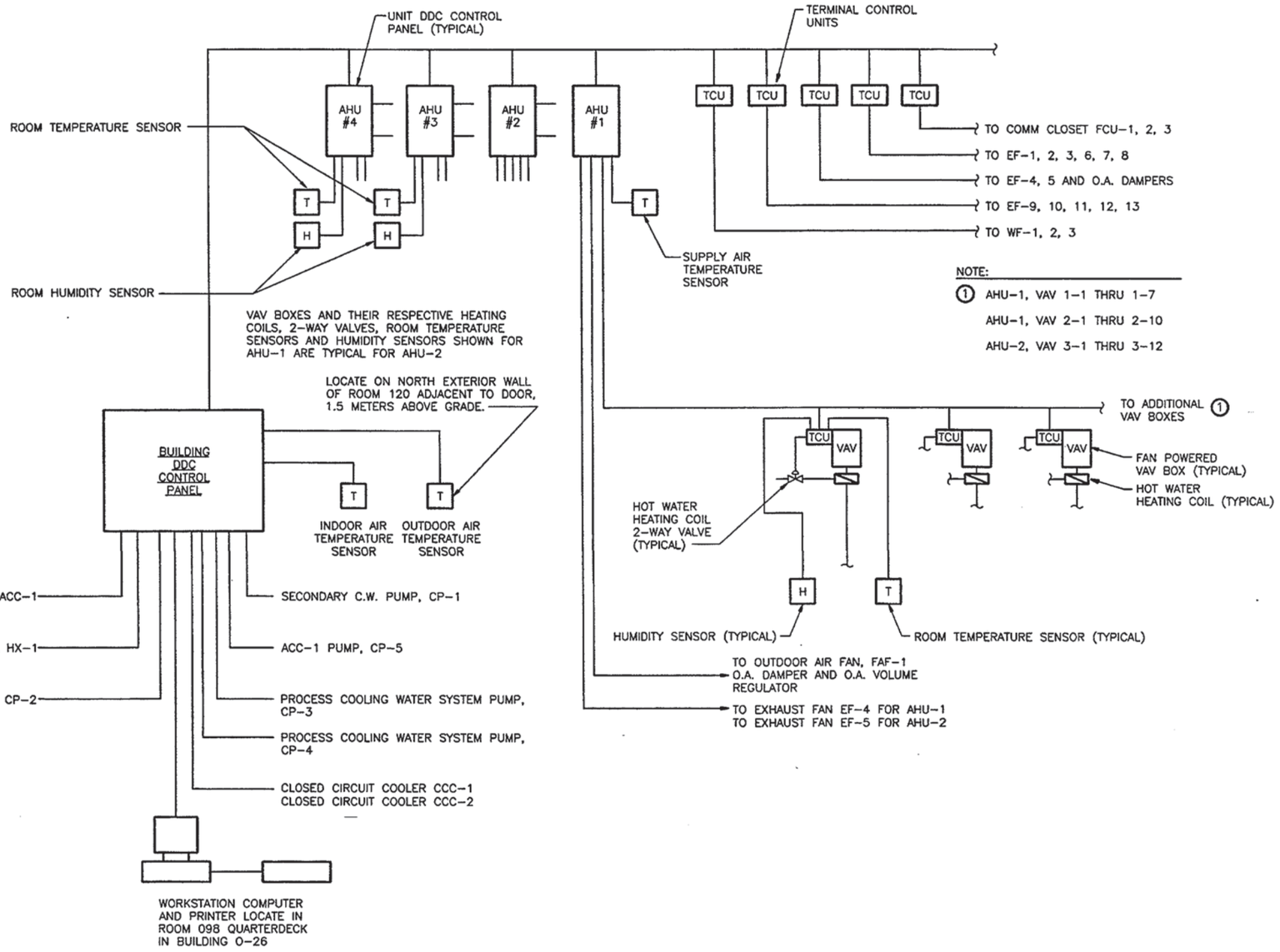

CONTROL DIAGRAM

NO SCALE

REVISIONS

NO.	DESCRIPTION	DATE	APPROVED

CLARK·NEXSEN
Architecture & Engineering
6160 Kempsville Circle, Suite 200A
Norfolk, Virginia 23502
757/455-5800
Fax 757/455-5638
http://www.clarknexsen.com

COMMONWEALTH OF VIRGINIA No. 14090 PROFESSIONAL ENGINEER

APPROVED
ACTIVITY - SATISFACTORY TO
DATE
APPROVED
FOR EFD FOR COMMANDER NAVFAC
DATE 3/8/99

FMD	DESIGN	EFD
LEW3	DRAWN	
JWA	REVIEW	
DRH	QC	
CEC	CHIEF ARCH./ ENGR.	
	PROJECT MANAGER	
	FIRE PROTECTION	
	BRANCH MANAGER	
	DESIGN DIRECTOR	

DEPARTMENT OF THE NAVY
NAVAL STATION
NAVAL FACILITIES ENGINEERING COMMAND
ATLANTIC DIVISION
NORFOLK, VIRGINIA
FLEET TRAINING CENTER
NORFOLK, VIRGINIA
ENGINEERING TRAINING FACILITY ADDITION
CONTROL DIAGRAMS

CODE ID. NO. 80091 | SIZE 0
SCALE: AS SHOWN
EFD NO. 495070
STA. PROJ. NO. P-179
SPEC. NO. 05-97-7065
CONSTR. CONTR. NO. N62470-97-B-7065
NAVFAC DRAWING NO. 4395070
SHEET 126 OF 174
M7.1

8 7 6 5 4 3 2 1

D C B A

EMCS POINT SCHEDULE

BUILDING NUMBER / SYSTEM(S) / OCCUPANCY TIME	GRAPH DISPLAY POINT DESCRIPTION	HARDWARE: OUTPUT FROM EMCS — DIGITAL: CONTROL RELAY	OPEN/CLOSE	HAND/OFF/AUTO	ON/OFF	ANALOG: OUTPUT	POSITION ADJUSTMENT	HARDWARE: INPUT TO EMCS — DIGITAL: PRESSURE SWITCH	DIFFERENTIAL PRESSURE SWITCH	CURRENT SENSING RELAY	FLOW SWITCH	AUXILIARY CONTACT	LOW LIMIT SWITCH	HIGH LIMIT SWITCH	LIMIT SWITCH	OVERRIDE	ANALOG: TEMPERATURE °C	RELATIVE HUMIDITY	PSIG, PSIA, PSID	POSITION	FLOW	SOFTWARE: ALARMS — DIGITAL: CONTACT CLOSURE	FILTER DIRTY	STATUS	ANALOG: HIGH LIMIT	LOW LIMIT	RUN TIME	APPLICATION PROGRAMS: SCHEDULED START/STOP	OPTIMUM START/STOP	DUTY CYCLING	DEMAND LIMITING	SMOKE SHUTDOWN	SUMMER/WINTER	DAY/NIGHT SETBACK	ECONOMIZER	ENTHALPY	VENTILATION/RECIRCULATION	HOT/COLD RESET	REHEAT COIL RESET	WATER SIDE ECONOMY	LEAD/LAG	OA/HW RESET	CHILLER OPTIMIZATION	CONDENSER WATER RESET	CHILLER DEMAND LIMIT	LIGHTING CONTROL	ENERGY TOTALIZATION	FAILURE MODE ACTION OR DEFAULT POSITION
ENGINEERING TRAINING FACILITY																																														
AHU-1, 2	SAF VFD START/STOP			●																								●	●				●													
AHU-1, 2	SAF STATUS									●														●																						
AHU-1, 2	SAF VFD CONTROL					●																																									
AHU-1, 2	2/3 STATIC PRESS																		●																												
AHU-1, 2	SUPPLY AIR SP HIGH LIMIT														●																														
AHU-1, 2, 3, 4	SUPPLY AIR TEMP																●									●																			
AHU-1, 2, 3, 4	RETURN AIR TEMP																●								●																			
AHU-1, 2, 3, 4	MIXED AIR TEMP																●									●																			
AHU-1, 2, 3, 4	RETURN DAMPERS					●																																								
AHU-1, 2, 3, 4	HEATING COIL		●																																											
AHU-1, 2, 3, 4	COOLING COIL		●																																											
AHU-1, 2, 3, 4	LOW TEMP DETECTOR														●																														
AHU-1, 2, 3, 4	SMOKE DETECTOR												●																																	
AHU-1, 2, 3, 4	FILTER								●																																					
AHU-1, 2	OA FAN START/STOP				●																																									
AHU-3, 4	OA DAMPER					●										●																														
AHU-1, 2	OA AIR FLOW					●																																								
AHU-1, 2	OA DAMPER					●										●																														
AHU-1, 2, 3, 4	TIMED OVERRIDE																	●																												
VAV1-1 THRU VAV1-7, VAV2-1 THRU VAV2-10, VAV3-1 THRU VAV3-12	START/STOP	●																																											
VAV1-1 THRU VAV1-7, VAV2-1 THRU VAV2-10, VAV3-1 THRU VAV3-12	DAMPER (PRIMARY AIR)					●																																							
VAV1-1 THRU VAV1-7, VAV2-1 THRU VAV2-10, VAV3-1 THRU VAV3-12	SPACE TEMP																	●																												
VAV1-1 THRU VAV1-7, VAV2-1 THRU VAV2-10, VAV3-1 THRU VAV3-12	VALVE (HEAT/REHEAT)						●																																						
VAV1-1 THRU VAV1-7, VAV2-1 THRU VAV2-10, VAV3-1 THRU VAV3-12	AIR FLOW																																												
VAV1-1 THRU VAV1-7, VAV2-1 THRU VAV2-10, VAV3-1 THRU VAV3-12	HUMIDITY																			●																										
VAV1-1 THRU VAV1-7, VAV2-1 THRU VAV2-10, VAV3-1 THRU VAV3-12	DISCHARGE AIR																																												
AHU-3, 4	REHEAT COIL						●																																							
AHU-3, 4	SAF START/STOP	●		●																●										●	●			●		●									
AHU-3, 4	SAF STATUS									●														●																					
AHU-3, 4	OA AIR FLOW																		●																											
AHU-3, 4	SPACE TEMP																	●																											
AHU-3, 4	SPACE HUMIDITY																			●																										
AHU-1, 2, 3, 4	FACE AND BYPASS DAMPERS						●																																						
BUILDING	OUTSIDE AIR TEMPERATURE																●																												
REFRIGERANT LEAK DETECTION SYSTEM	ALARM												●																																

REVISIONS

NO.	DESCRIPTION	DATE	APPROVED

CLARK·NEXSEN
Architecture & Engineering
6160 Kempsville Circle, Suite 200A
Norfolk, Virginia 23502
757/455-5800
Fax 757/455-5638
http://www.clarknexsen.com

COMMONWEALTH OF VIRGINIA — ENGINEER — No. 14091 — 12/21/99 — PROFESSIONAL

APPROVED
ACTIVITY – SATISFACTORY TO
DATE
APPROVED
FOR EFD FOR COMMANDER NAVFAC
DATE 3/8/99

		EFD
FMD	DESIGN	
LEW3	DRAWN	
JWA	REVIEW	ETC
DRH	QC	
CEC	CHIEF ARCH./ ENGR.	
PROJECT MANAGER		
FIRE PROTECTION	RJK	
BRANCH MANAGER	JTM	
DESIGN DIRECTOR	JBB	

DEPARTMENT OF THE NAVY
NAVAL STATION
ATLANTIC DIVISION
NAVAL FACILITIES ENGINEERING COMMAND
NORFOLK, VIRGINIA
FLEET TRAINING CENTER
NORFOLK, VIRGINIA
ENGINEERING TRAINING FACILITY ADDITION
CONTROL DIAGRAMS

CODE ID. NO. 80091	SIZE D
SCALE: AS SHOWN	
EFD NO. 495071	
STA. PROJ. NO. P-179	
SPEC. NO. 05-97-7065	
CONSTR. CONTR. NO. N62470-97-B-7065	
NAVFAC DRAWING NO. 4395071	
SHEET 127 OF 174	

M7.2

8 7 6 5 4 3 2 1

D C B A

EMCS POINT SCHEDULE

BUILDING NUMBER / SYSTEM(S) / OCCUPANCY TIME	GRAPH DISPLAY POINT DESCRIPTION	HARDWARE: OUTPUT FROM EMCS — DIGITAL: CONTROL RELAY	OPEN/CLOSE	HAND/OFF/AUTO	OFF/AUTO	ANALOG: OUTPUT	POSITION ADJUSTMENT	HARDWARE: INPUT TO EMCS — DIGITAL: PRESSURE SWITCH	DIFFERENTIAL PRESSURE SWITCH	CURRENT SENSING RELAY	FLOW SWITCH	AUXILIARY CONTACT	LOW LIMIT SWITCH	HIGH LIMIT SWITCH	LIMIT SWITCH	OVERRIDE	ANALOG: TEMPERATURE °C	RELATIVE HUMIDITY	PSIG, PSIA, PSID	POSITION	FLOW	SOFTWARE: ALARMS — DIGITAL: CONTACT CLOSURE	FILTER DIRTY	STATUS	ANALOG: HIGH LIMIT	LOW LIMIT	RUN TIME	APPLICATION PROGRAMS: SCHEDULED START/STOP	OPTIMUM START/STOP	DUTY CYCLING	DEMAND LIMITING	SMOKE SHUTDOWN	SUMMER/WINTER	DAY/NIGHT SETBACK	ECONOMIZER	ENTHALPY	VENTILATION/RECIRCULATION	HOT/COLD RESET	REHEAT COIL RESET	WATER SIDE ECONOMY	LEAD/LAG	OA/HW RESET	CHILLER OPTIMIZATION	CONDENSER WATER RESET	CHILLER DEMAND LIMIT	LIGHTING CONTROL	ENERGY TOTALIZATION	FAILURE MODE ACTION OR DEFAULT POSITION
ENGINEERING TRAINING FACILITY																																															
ACC-1	CHILL ENABLE/DISABLE			●																														●													
ACC-1	CHILL STATUS											●										●																									
ACC-1	CHILL ALARM											●											●																									
ACC-1	CWS TEMP																●								●																						
ACC-1	CWR TEMP																●								●																						
CP-1	FLOW										●																																				
CP-1	CHILLED WATER BYPASS VALVE		●																																												
CP-2	HOT WATER BYPASS VALVE		●																																												
CP-5	FLOW										●																																				
CP-5	CW PUMP START/STOP			●																																										
CP-5	CW PUMP STATUS									●												●																									
CP-1	CW PUMP VFD START/STOP			●																																											
CP-1	CW PUMP STATUS									●												●																									
CP-1	CW PUMP VFD ALARM										●											●																									
	SECONDARY CWS TEMP																●																													
	SECONDARY CWR TEMP																●																													
CCC-1	SPRAY PUMP START/STOP			●																																										
CCC-1	SPRAY PUMP STATUS									●												●																									
CCC-1	FAN STAGE 1 START/STOP			●																																										
CCC-1	FAN STAGE 1 STATUS									●												●																									
CCC-1	FAN STAGE 2 START/STOP			●																																										
CCC-1	FAN STAGE 2 STATUS									●												●																									
CP-3	PCWR FLOW										●																																				
CCC-2	SPRAY PUMP START/STOP			●																																										
CCC-2	SPRAY PUMP STATUS									●												●																									
CCC-2	FAN STAGE 1 START/STOP			●																																										
CCC-2	FAN STAGE 1 STATUS									●												●																									
CCC-2	FAN STAGE 2 START/STOP			●																																										
CCC-2	FAN STAGE 2 STATUS									●												●																									
CP-4	PCWR FLOW										●																																				
CP-2	FLOW										●																																				
CP-2	HW PUMP START/STOP			●																																										
CP-2	HW PUMP STATUS									●													●																								
CP-3	PCW PUMP START/STOP			●																																										
CP-3	PCW PUMP STATUS									●													●																								
CP-4	PCW PUMP START/STOP			●																																										
CP-4	PCW PUMP STATUS									●													●																								
	PCWR TEMP																	●																													
	PCWS TEMP																	●																													
HWCONV HX-1	STEAM VALVE						●																																								
	HWS TEMP																	●																													
	HWR TEMP																	●																													
	BLDG STEAM USAGE																								●																				●	
	HW RADIATION VALVE 1ST FLOOR				●																																									
	HW RADIATION VALVE 2ND FLOOR				●																																									
	HW RADIATION VALVE 3RD FLOOR				●																																									
EF-1, 2, 3, 4	EXHAUST FANS AND DAMPERS		●	●							●																																			
EF-5, 7	EXHAUST FANS AND DAMPERS		●	●							●																																			
EF-8, 9, 10, 11	EXHAUST FANS AND DAMPERS		●	●							●																																			
EF-6	EXHAUST FAN				●						●																																			
EF-12, 13	EXHAUST FAN AND DAMPERS		●	●							●																																			
FCU-1, 2, 3	FCU STATUS										●																																			

REVISIONS

STA.	DESCRIPTION	DATE	APPROVED

CLARK·NEXSEN
Architecture & Engineering
6160 Kempsville Circle, Suite 200A
Norfolk, Virginia 23502
757/455-5800
Fax 757/455-5638
http://www.clarknexsen.com

COMMONWEALTH OF VIRGINIA — THOMAS R. HOLLAND — No. 14099 — REGISTERED PROFESSIONAL ENGINEER — 2/18/99

APPROVED
ACTIVITY – SATISFACTORY TO
DATE
APPROVED
FOR ETD FOR COMMANDER NAVFAC
DATE 2/18/99

ETD
FMD DESIGN
LEW3 DRAWN
JWA REVIEW GTC
DRH QC
CEC CHIEF ARCH./ ENGR.
PROJECT MANAGER
FIRE PROTECTION BJC
BRANCH MANAGER VTT
DESIGN DIRECTOR

DEPARTMENT OF THE NAVY
NAVAL STATION
ATLANTIC DIVISION
NAVAL FACILITIES ENGINEERING COMMAND
NORFOLK, VIRGINIA
FLEET TRAINING CENTER
NORFOLK, VIRGINIA
ENGINEERING TRAINING FACILITY ADDITION
CONTROL DIAGRAMS

CODE ID. NO. 80091 | SIZE D
SCALE: AS SHOWN
ETD NO. 495072
STA. PROJ. NO. P-179
SPEC. NO. 05-97-7065
CONSTR. CONTR. NO. N62470-97-B-7065
NAVFAC DRAWING NO. 4395072
SHEET 128 OF 174
M7.3

8 7 6 5 4 3 2 1
D C B A

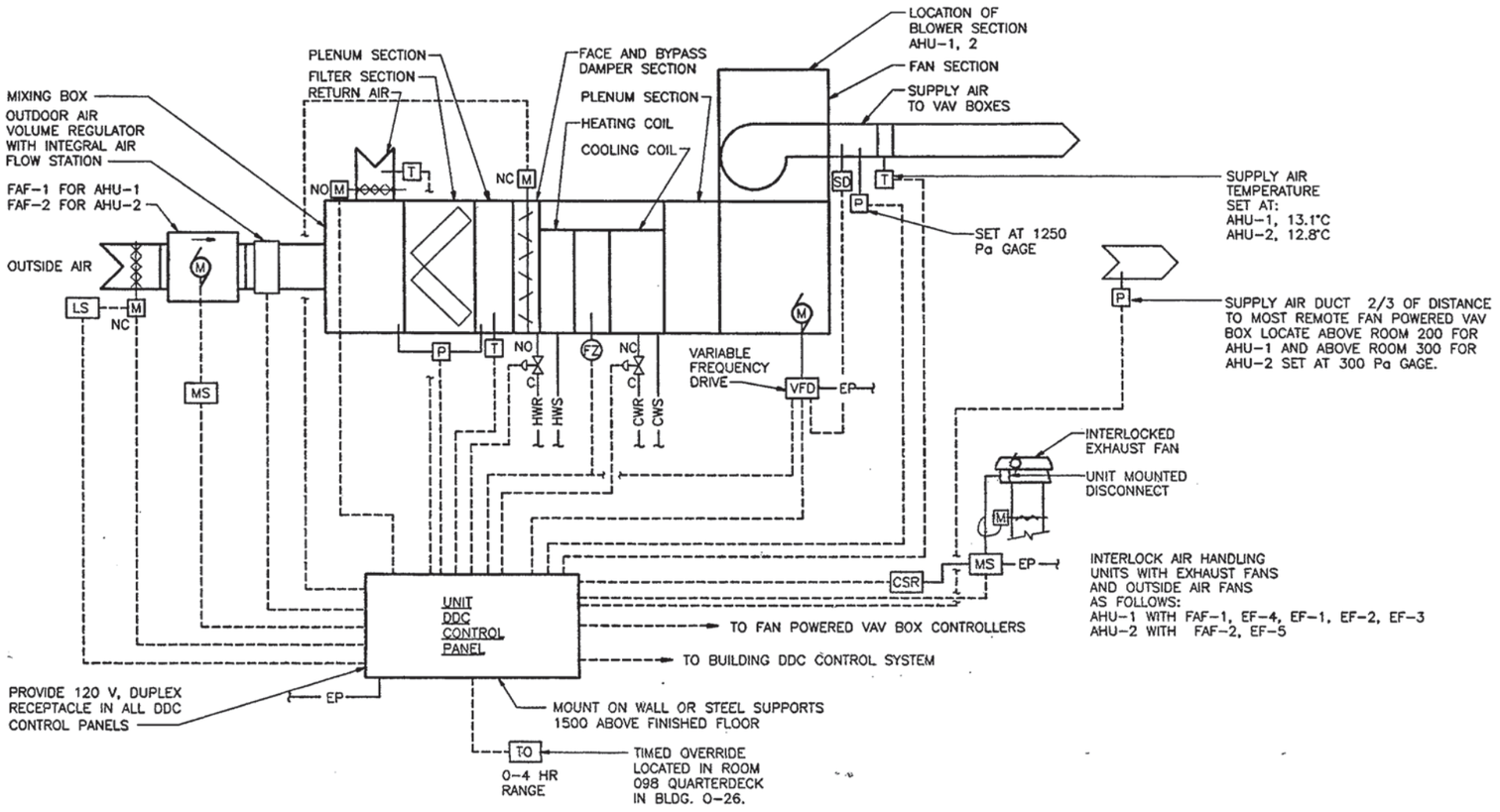

SEQUENCE OF OPERATION

WHEN THE AIR HANDLING UNIT IS ENERGIZED BY ITS DDC CONTROL PANEL, A SIGNAL SHALL BE SENT TO THE FAN POWERED VAV BOXES TO ENERGIZE THEIR UNIT FANS. AFTER THE FAN POWERED VAV BOXES ARE ENERGIZED, THE OUTSIDE AIR DAMPER SHALL OPEN, UPON PROOF OF DAMPER POSITION BY A LIMIT SWITCH, THE RETURN AIR DAMPER SHALL OPEN, THE AIR HANDLING UNIT SUPPLY FAN SHALL START AFTER A FIVE MINUTE DELAY AND ITS RESPECTIVE OUTSIDE AIR SUPPLY AND EXHAUST FANS AND DAMPERS SHALL BE ENERGIZED BY THE RESPECTIVE AIR HANDLING UNIT WALL MOUNTED DDC CONTROL PANEL. THE UNIT OUTSIDE AIR VOLUME REGULATOR SHALL MODULATE TO ITS PREDETERMINED POSITION AND THE RETURN AIR DAMPER SHALL MODULATE TO ITS PREDETERMINED POSITION.

UPON RECEIPT OF A FAN-ON STATUS SIGNAL, THE UNIT SUPPLY FAN STATIC PRESSURE SENSOR SHALL CONTROL THE SUPPLY DUCT STATIC PRESSURE, AS SENSED BY THE SUPPLY DUCT STATIC PRESSURE SENSOR LOCATED TWO THIRDS (2/3) OF THE DISTANCE FROM THE SUPPLY FAN TO THE MOST REMOTE VAV BOX, BY MODULATING THE UNIT SUPPLY FAN CAPACITY THROUGH THE VARIABLE FREQUENCY DRIVE. THE UNIT SUPPLY FAN CAPACITY SHALL INCREASE GRADUALLY UNTIL THE STATIC PRESSURE SETPOINT IS ACHIEVED. ON AN INCREASE IN DUCT STATIC PRESSURE, THE UNIT SUPPLY FAN STATIC PRESSURE SENSOR SETPOINT IS RE-ESTABLISHED. ON A DECREASE IN SUPPLY DUCT STATIC PRESSURE, THE REVERSE SHALL OCCUR. UPON RECEIPT OF A FAN-OFF STATUS SIGNAL, THE UNIT FAN SUPPLY SHALL MODULATE TO MINIMUM CAPACITY.

A HIGH LIMIT STATIC PRESSURE SENSOR LOCATED IN THE UNIT SUPPLY FAN DISCHARGE DUCT SHALL OVERRIDE THE 2/3 DUCT STATIC PRESSURE SENSOR AND SHALL SHUT THE AHU DOWN SHOULD THE UNIT SUPPLY FAN DISCHARGE STATIC PRESSURE RISE ABOVE A PREDETERMINED SETTING.

ON A RISE IN SUPPLY AIR TEMPERATURE, AS SENSED BY THE SUPPLY AIR TEMPERATURE SENSOR, THE UNIT DDC CONTROL PANEL SHALL OPEN THE TWO-WAY CHILLED WATER CONTROL VALVE FULLY OPEN TO THE CHILLED WATER COIL AND THEN MODULATE THE FACE AND BYPASS DAMPERS AS REQUIRED TO MAINTAIN ITS SETPOINT. ON A FALL IN SUPPLY AIR TEMPERATURE, THE REVERSE OPERATION SHALL OCCUR.

ON A CONTINUED FALL IN SUPPLY AIR TEMPERATURE, THE UNIT DDC CONTROL PANEL SHALL OPEN THE TWO-WAY HOT WATER CONTROL VALVE FULLY OPEN TO THE HOT WATER COIL AND THEN MODULATE THE FACE AND BYPASS DAMPERS AS REQUIRED TO MAINTAIN ITS SETPOINT. ON A RISE IN SUPPLY AIR TEMPERATURE, THE REVERSE OPERATION SHALL OCCUR.

AN OUTDOOR AIR VOLUME REGULATOR LOCATED DOWNSTREAM OF THE OUTSIDE AIR SUPPLY FAN (FAF-1, 2) SHALL MODULATE ITS OUTSIDE AIR DAMPER TO LIMIT THE AMOUNT OF OUTSIDE AIR SUPPLIED TO THE AIR HANDLING UNIT TO ITS MINIMUM DESIGN SETTING INDEPENDENT FROM AIR HANDLING UNIT OPERATING STATIC PRESSURE.

FAN POWERED VAV BOX CONTROL SYSTEM SHALL BE AS SPECIFIED IN "CONSTANT VOLUME SERIES FAN-POWERED BOX CONTROL DIAGRAM" SHEET M7.6.

A LOW LIMIT FREEZESTAT LOCATED IN THE HEATING COIL DISCHARGE (UPSTREAM OF THE CHILLED WATER COIL) SHALL DE-ENERGIZE THE UNIT SUPPLY FAN AND ANNUNCIATE TO THE DDC CONTROL SYSTEM TO DE-ENERGIZE THE OUTSIDE AIR SUPPLY FAN AND CLOSE THE OUTSIDE AIR DAMPER, AND MODULATE THE FACE AND BYPASS DAMPERS TO FULL BYPASS ON A FALL IN DISCHARGE AIR TEMPERATURE BELOW 3°C. THE FREEZESTAT SHALL REQUIRE MANUAL RESET.

PROVIDE PHOTOELECTRIC TYPE SMOKE DETECTORS IN THE SUPPLY AIR WHICH SHALL, ON DETECTION OF PRODUCTS OF COMBUSTION, DE-ENERGIZE THE UNIT SUPPLY FAN AND ANNUNCIATE TO THE DDC CONTROL SYSTEM TO DE-ENERGIZE THE OUTSIDE AIR SUPPLY FAN AND CLOSE THE OUTSIDE AIR DAMPER AND SEND A SIGNAL TO THE BUILDING FIRE ALARM PANEL.

OPTIMUM START AND NIGHT SETBACK SHALL BE ACCOMPLISHED BY THE BUILDING DDC CONTROL SYSTEM. ALL HEATING SHALL BE DONE LOCALLY. SEE "CONSTANT VOLUME SERIES FAN-POWERED BOX CONTROL DIAGRAM" SHEET M7.6 FOR SEQUENCE OF OPERATION.

DURING UNOCCUPIED PERIODS, THE UNIT DDC CONTROL PANEL SHALL DE-ENERGIZE THE UNIT SUPPLY FAN, OUTDOOR AIR SUPPLY FAN, AND VAV BOXES SERVED BY THE AIR HANDLING UNIT. THE OUTSIDE AIR AND RETURN AIR DAMPERS SHALL BE CLOSED AND INTERLOCKED EXHAUST FANS SHALL BE DE-ENERGIZED.

PROVIDE A TIMED OVERRIDE SWITCH WHICH SHALL OVERRIDE THE SIGNAL FROM THE UNIT DDC CONTROL PANEL FOR "UNOCCUPIED MODE" AND ENERGIZE THE AIR HANDLING UNIT.

AHU (VAV) CONTROL DIAGRAM (AHU-1 AND AHU-2)

NO SCALE

REVISIONS

NO	DESCRIPTION	DATE	APPROVED

CLARK·NEXSEN
Architecture & Engineering
6160 Kempsville Circle, Suite 200A
Norfolk, Virginia 23502
757/455-5800
Fax 757/455-5638
http://www.clarknexsen.com

COMMONWEALTH OF VIRGINIA — ENGINEER — No. 14090 — 01 99 — PROFESSIONAL

APPROVED
ACTIVITY - SATISFACTORY TO
DATE
APPROVED
FOR ETD FOR COMMANDER NAVFAC
DATE 5/18/99

		ETD
FMD	DESIGN	
LEW3	DRAWN	
JWA	REVIEW	ETD
DRH	QC	
CEC	CHIEF ARCH./ ENGR.	
	PROJECT MANAGER	
	FIRE PROTECTION	
	BRANCH MANAGER	
	DESIGN DIRECTOR	

DEPARTMENT OF THE NAVY
NAVAL FACILITIES ENGINEERING COMMAND
NAVAL STATION ATLANTIC DIVISION NORFOLK, VIRGINIA
FLEET TRAINING CENTER NORFOLK, VIRGINIA
ENGINEERING TRAINING FACILITY ADDITION
CONTROL DIAGRAMS

CODE ID. NO. 80091 | SIZE D
SCALE AS SHOWN
ETD NO. 495073
STA. PROJ. NO. P-179
SPEC. NO. 05-97-7065
CONSTR. CONTR. NO. N62470-97-B-7065
NAVFAC DRAWING NO. 4395073
SHEET 129 OF 174
M7.4

8 7 6 5 4 3 2 1
D C B A

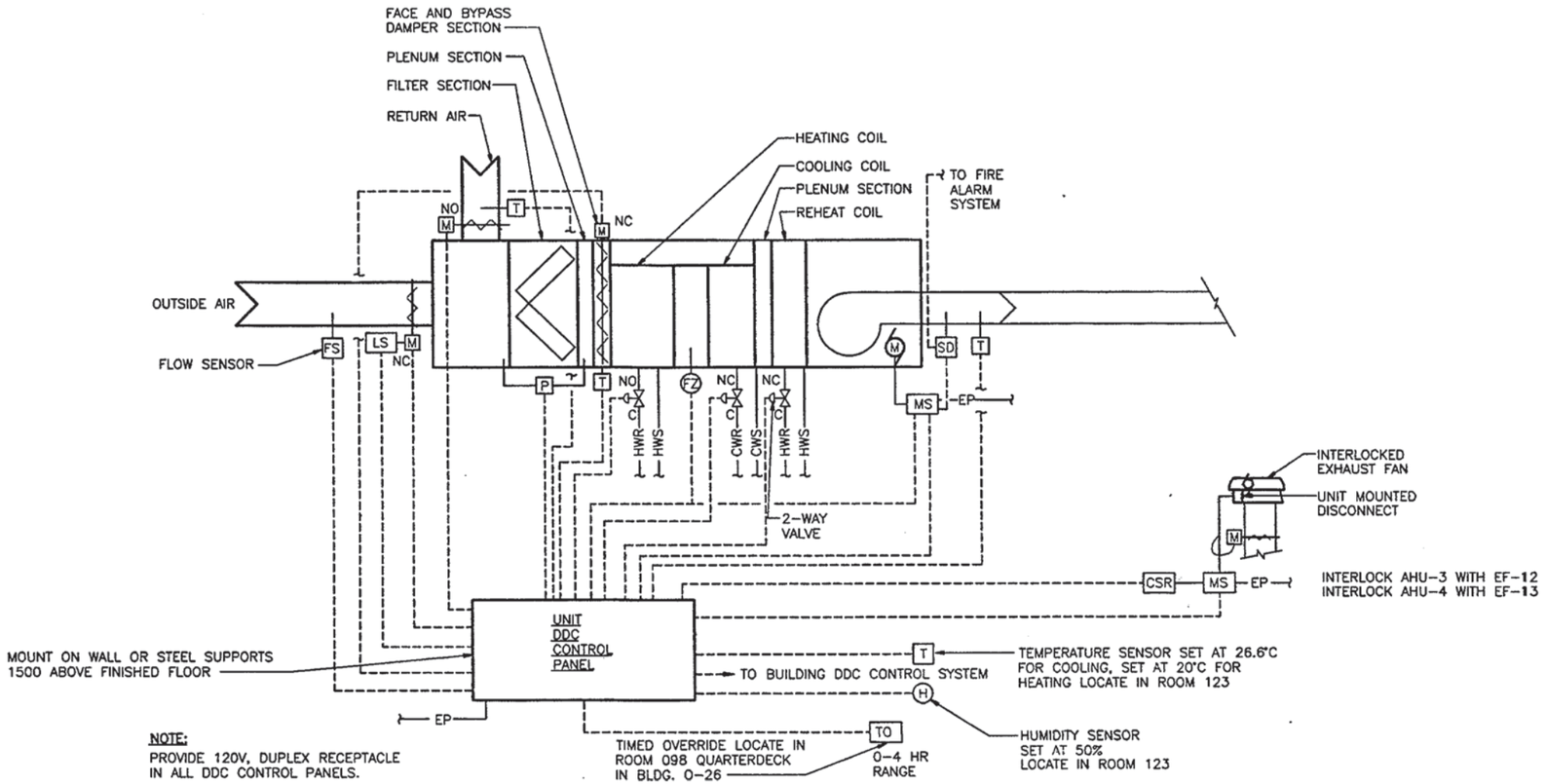

NOTE:
PROVIDE 120V, DUPLEX RECEPTACLE IN ALL DDC CONTROL PANELS.

SEQUENCE OF OPERATIONS:

WHEN THE AIR HANDLING UNIT IS ENERGIZED BY ITS DDC CONTROL PANEL, THE AIR HANDLING UNIT SUPPLY FAN AND ITS RESPECTIVE INTERLOCKED EXHAUST FANS AND DAMPERS SHALL BE ENERGIZED BY THE RESPECTIVE AIR HANDLING UNIT WALL MOUNTED DDC CONTROL PANEL AND THE UNIT OUTSIDE AIR DAMPER, SHALL OPEN, UPON PROOF OF DAMPER POSITION BY A LIMIT SWITCH, AND MODULATE TO ITS PREDETERMINED POSITION AND THE RETURN AIR DAMPER SHALL MODULATE TO ITS PREDETERMINED POSITIONS UPON PROOF OF DAMPER POSITION.

WHEN THE UNIT IS INDEXED TO COOLING BY THE UNIT DDC CONTROL PANEL ON A RISE IN SPACE TEMPERATURE, AS SENSED BY THE SPACE AIR TEMPERATURE SENSOR, THE UNIT DDC CONTROL PANEL SHALL OPEN THE TWO-WAY CHILLED WATER CONTROL VALVE FULLY OPEN TO THE CHILLED WATER COIL AND THEN MODULATE THE FACE AND BYPASS DAMPERS AS REQUIRED TO MAINTAIN ITS SETPOINT. ON A FALL IN SPACE TEMPERATURE, THE REVERSE OPERATION SHALL OCCUR.

WHEN THE UNIT IS INDEXED TO HEATING BY THE UNIT DDC CONTROL PANEL, ON A FALL IN SPACE TEMPERATURE, THE UNIT DDC CONTROL PANEL SHALL OPEN THE TWO-WAY HOT WATER CONTROL VALVE FULLY OPEN TO THE HOT WATER COIL AND THEN MODULATE THE FACE AND BYPASS DAMPERS AS REQUIRED TO MAINTAIN ITS SETPOINT. ON A RISE IN SPACE TEMPERATURE, THE REVERSE OPERATION SHALL OCCUR.

WHEN THE OUTSIDE AIR TEMPERATURE RISES ABOVE 21°C, THE AHU SHALL BE INDEXED TO COOLING AND THE SPACE TEMPERATURE SETPOINT SHALL BE 26.6°C. WHEN THE OUTSIDE AIR TEMPERATURE FALLS BELOW 15°C, THE AHU SHALL BE INDEXED TO HEATING AND THE SPACE TEMPERATURE SETPOINT SHALL BE 20°C. THE SETPOINT SHALL NOT CHANGE WHEN THE OUTSIDE AIR TEMPERATURE IS BETWEEN 15°C AND 21°C.

ON A RISE IN SPACE RELATIVE HUMIDITY ABOVE 50 PERCENT, AS SENSED BY THE SPACE HUMIDITY SENSOR, THE UNIT DDC CONTROL PANEL SHALL OPEN THE TWO-WAY CHILLED WATER CONTROL VALVE FULLY OPEN TO THE CHILLED WATER COIL. THE UNIT DDC CONTROL PANEL SHALL THEN MODULATE THE FACE AND BYPASS DAMPERS TO FULL FACE OF THE CHILLED WATER COIL AND MODULATE THE TWO-WAY HOT WATER REHEAT COIL CONTROL VALVE TO MAINTAIN ITS SETPOINT. ON A FALL IN SPACE RELATIVE HUMIDITY, THE REVERSE OPERATION SHALL OCCUR.

A LOW LIMIT FREEZESTAT LOCATED ON THE DOWNSTREAM FACE OF THE HOT WATER HEATING COIL (UPSTREAM OF THE CHILLED WATER COIL) SHALL DE-ENERGIZE THE UNIT SUPPLY FAN AND ITS RESPECTIVE EXHAUST FAN(S) AND ANNUNCIATE TO THE DDC CONTROL SYSTEM TO CLOSE THE OUTSIDE AIR DAMPER AND FULLY OPEN THE RETURN AIR DAMPER AND MODULATE THE FACE AND BYPASS DAMPERS TO FULL BYPASS ON A FALL IN THE HEATING COIL DISCHARGE TEMPERATURE BELOW 3°C. THE FREEZESTAT SHALL REQUIRE MANUAL RESET.

WHEN THE AIR HANDLING UNIT IS ENERGIZED BY THE BUILDING DDC CONTROL SYSTEM, THE UNIT OUTSIDE AIR DAMPER SHALL OPEN TO ITS PREDETERMINED MINIMUM POSITION FOR 320 LITERS PER SECOND OF OUTSIDE AIR. WHEN THE BRAZING HOOD EXHAUST FAN EF-11 IS MANUALLY ENERGIZED BY ITS WALL MOUNTED "H-O-A" SWITCH, THE UNIT OUTSIDE AIR DAMPER SHALL MODULATE OPEN TO ITS MAXIMUM OPEN POSITION FOR 768 LITERS PER SECOND OF OUTSIDE AIR AND THE RETURN AIR DAMPER SHALL PROPORTIONALLY CLOSE. WHEN EF-11 IS DE-ENERGIZED, THE REVERSE OPERATION SHALL OCCUR.

NIGHT SETBACK AND OPTIMUM START SHALL BE ACCOMPLISHED BY THE BUILDING DDC CONTROL SYSTEM. ON A SIGNAL FROM THE UNIT DDC CONTROL PANEL FOR NIGHT SETBACK OPERATION, THE UNIT OUTSIDE AIR DAMPERS SHALL BE CLOSED, THE UNIT RETURN AIR DAMPERS SHALL BE FULLY OPEN AND THE RESPECTIVE INTERLOCKED EXHAUST FANS AND DAMPERS SHALL BE DE-ENERGIZED. THE ROOM TEMPERATURE SETPOINT SHALL BE SETBACK TO 18.3°C AND THE UNIT SUPPLY FAN SHALL BE CYCLED TO MAINTAIN THE SPACE TEMPERATURE SETPOINT. ON A SIGNAL FROM THE UNIT DDC CONTROL PANEL FOR OPTIMUM START, THE ROOM SET POINTS SHALL BE RESET TO THEIR NORMAL OPERATION. THE OUTSIDE AIR DAMPERS SHALL BE OPENED TO THEIR MINIMUM POSITION AND THE RESPECTIVE INTERLOCKED EXHAUST FANS AND DAMPERS SHALL BE ENERGIZED BY THE UNIT DDC CONTROL PANEL ACCORDING TO A PREDETERMINED SCEDULE.

PROVIDE PHOTOELECTRIC TYPE SMOKE DETECTORS IN THE SUPPLY AIR DUCTWORK WHICH ON DETECTION OF PRODUCTS OF COMBUSTION SHALL DE-ENERGIZE THE UNIT SUPPLY FAN AND ANNUNCIATE TO THE DDC CONTROL SYSTEM TO CLOSE THE OUTSIDE AIR DAMPER AND SEND AN ALARM SIGNAL TO THE FIRE ALARM PANEL.

DURING UNOCCUPIED PERIODS, THE BUILDING DDC CONTROL SYSTEM SHALL CLOSE THE UNIT OUTSIDE AIR DAMPER, OPEN THE RETURN AIR DAMPER AND DE-ENERGIZE INTERLOCKED EXHAUST FANS.

PROVIDE A TIMED OVERRIDE SWITCH WHICH SHALL OVERRIDE THE SIGNAL FROM THE UNIT DDC CONTROL PANEL FOR "UNOCCUPIED MODE" AND ENERGIZE THE AIR HANDLING UNIT.

AHU CONTROL DIAGRAM (TYPICAL FOR AHU-3 AND AHU-4)

NO SCALE

REVISIONS

NO	DESCRIPTION	DATE	APPROVED

CLARK NEXSEN
Architecture & Engineering
6160 Kempsville Circle, Suite 200A
Norfolk, Virginia 23502
757/455-5800
Fax 757/455-5638
http://www.clarknexsen.com

COMMONWEALTH OF VIRGINIA — ENGINEER — No. 0409 — PROFESSIONAL

APPROVED
ACTIVITY - SATISFACTORY TO
DATE
APPROVED
FOR EFD FOR COMMANDER NAVFAC
DATE 3/8/99

		EFD
FMD	DESIGN	
LEW3	DRAWN	
JWA	REVIEW	GTC
DRH	QC	
CEC	CHIEF ARCH./ ENGR.	
	PROJECT MANAGER	
	FIRE PROTECTION	BAT
	BRANCH MANAGER	JTM
	DESIGN DIRECTOR	GTC

DEPARTMENT OF THE NAVY — NAVAL FACILITIES ENGINEERING COMMAND
NAVAL STATION — ATLANTIC DIVISION — NORFOLK, VIRGINIA
FLEET TRAINING CENTER — NORFOLK, VIRGINIA
ENGINEERING TRAINING FACILITY ADDITION
CONTROL DIAGRAMS

CODE ID. NO. 80091 | SIZE D
SCALE: AS SHOWN
EFD NO. 495074
STA. PROJ. NO. P-179
SPEC. NO. 05-97-7065
CONSTR. CONTR. NO. N62470-97-B-7065
NAVFAC DRAWING NO. 4395074
SHEET 130 OF 174
M7.5

8 | 7 | 6 | 5 | 4 | 3 | 2 | 1
D | C | B | A

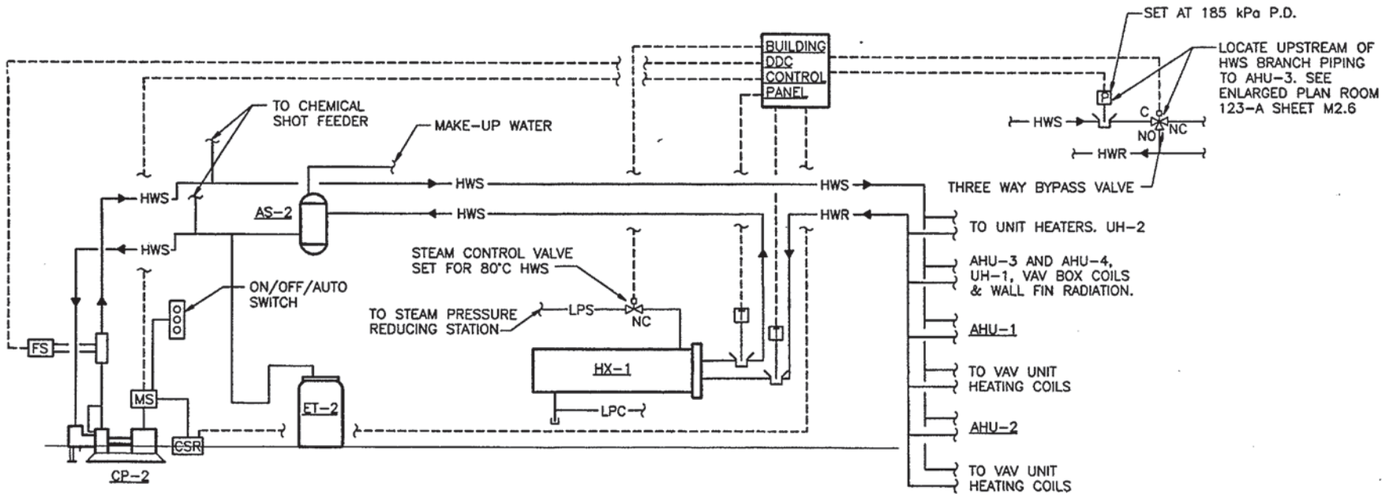

SEQUENCE OF OPERATION

THE BUILDING DDC CONTROL PANEL SHALL ENERGIZE THE HEAT EXCHANGER CONTROLS. A TWO-WAY STEAM CONTROL VALVE SHALL, THROUGH ITS SENSOR/TRANSMITTER LOCATED IN THE BUILDING HWS PIPING, CONTROL TO MAINTAIN THE HOT WATER SUPPLY TEMPERATURE TO THE BUILDING HEATING SYSTEM.

THE BUILDING HEATING HOT WATER THREE WAY BYPASS VALVE SHALL BE CONTROLLED BY THE BUILDING DDC CONTROL PANEL TO PROTECT THE HOT WATER CIRCULATING PUMP, RESPECTIVELY, AT LOW LOAD/LOW FLOW CONDITIONS. ON A RISE IN SYSTEM PRESSURE ABOVE ITS SETPOINT OF 185 kPa, AS SENSED BY THE PRESSURE SENSOR LOCATED IN THE HOT WATER SUPPLY PIPING, THE THREE WAY BYPASS VALVE LOCATED IN THE HOT WATER SUPPLY PIPING, AS INDICATED ON THE DRAWINGS, SHALL BE MODULATED TO MAINTAIN ITS SETPOINT AND TO PREVENT THE CIRCULATING PUMPS FROM GOING TO SHUTOFF HEAD AND OVERHEATING. ON A FALL IN SYSTEM PRESSURE BELOW ITS SETPOINT, THE REVERSE OPERATION SHALL OCCUR.

THE HOT WATER PUMP CP-2 SHALL BE ENERGIZED BY THE BUILDING DDC CONTROL PANEL AND SHALL RUN CONTINUOUSLY. A FLOW SWITCH LOCATED IN THE DISCHARGE PIPING FOR EACH PUMP SHALL SEND A SIGNAL TO THE DDC CONTROL PANEL INDICATING POSITIVE WATER FLOW FOR THE PUMP. ON LOSS OF FLOW FROM THE PUMP CP-2, A TROUBLE SIGNAL SHALL BE SENT TO THE BUILDING DDC CONTROL PANEL.

A HOT WATER PUMP FAILURE SHALL BE DISPLAYED ON THE DDC COMPUTER MONITOR.

HEAT EXCHANGER CONTROL DIAGRAM

NO SCALE

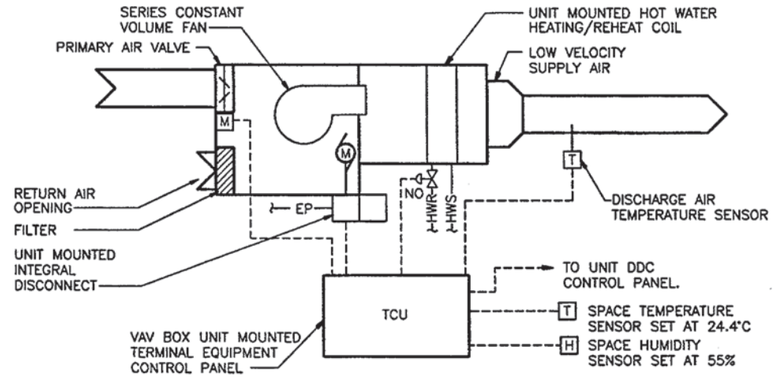

SEQUENCE OF OPERATION

WHEN THE ASSOCIATED AIR HANDLING UNIT CONTROLS ARE ENERGIZED BY THE DDC CONTROL PANEL, THE FAN POWERED VAV BOX CONTROL SHALL BE ENABLED AND THE VAV BOX FAN ENERGIZED (BEFORE THE AIR HANDLING UNIT SUPPLY FAN IS ENERGIZED) AND SHALL RUN CONTINUOUSLY.

ON A RISE IN SPACE TEMPERATURE, AS SENSED BY THE VAV BOX SPACE TEMPERATURE SENSOR, THE UNIT PRIMARY AIR VALVE SHALL MODULATE OPEN TO MAINTAIN THE SPACE TEMPERATURE SETPOINT. ON A FALL IN SPACE TEMPERATURE, THE REVERSE OPERATION SHALL OCCUR.

ON A CONTINUED FALL IN SPACE TEMPERATURE, THE UNIT PRIMARY AIR VALVE SHALL MODULATE TO ITS MINIMUM POSITION AND THE UNIT HEATING COIL TWO-WAY VALVE SHALL MODULATE OPEN TO MAINTAIN THE SPACE TEMPERATURE SETPOINT. WHEN THE OUTSIDE AIR TEMPERATURE RISES ABOVE 21°C, THE SPACE TEMPERATURE SETPOINT SHALL BE 24.4°C. WHEN THE OUTSIDE AIR TEMPERATURE FALLS BELOW 15°C, THE SPACE TEMPERATURE SETPOINT SHALL BE 20°C. THE SETPOINT SHALL NOT CHANGE WHEN THE OUTSIDE AIR TEMPERATURE IS BETWEEN 15°C AND 21°C.

ON A RISE IN SPACE RELATIVE HUMIDITY ABOVE 55 PERCENT, AS SENSED BY THE SPACE HUMIDITY SENSOR, THE HUMIDITY SENSOR SHALL OPEN THE VAV UNIT PRIMARY AIR CONTROL VALVE TO ITS FULLY OPEN POSITION AND THE HOT WATER REHEAT COIL TWO-WAY CONTROL VALVE SHALL BE MODULATED TO MAINTAIN A SPACE TEMPERATURE OF 24.4°C. ON A FALL IN SPACE RELATIVE HUMIDITY BELOW 50 PERCENT, THE REVERSE OPERATION SHALL OCCUR.

DURING OPTIMUM START AND NIGHT SETBACK, THE RESPECTIVE AIR HANDLING UNIT SHALL BE DE-ENERGIZED. DURING OPTIMUM START AND NIGHT SETBACK, THE UNIT PRIMARY AIR VALVE SHALL BE CLOSED, THE UNIT HEATING CONTROL VALVE SHALL BE OPEN AND THE VAV BOX FAN SHALL OPERATE. (VAV BOX FAN WILL NOT OPERATE DURING NIGHT SETBACK EXCEPT TO MAINTAIN THE NIGHT SETBACK TEMPERATURE.) THE RESPECTIVE AIR HANDLING UNIT SHALL BE ENERGIZED BY ITS DDC CONTROL PANEL ACCORDING TO A PREDETERMINED SCHEDULE AND THE UNIT PRIMARY AIR VALVE SHALL RETURN TO ITS MINIMUM OPEN POSITION.

CONSTANT VOLUME SERIES FAN-POWERED BOX CONTROL DIAGRAM

NO SCALE

REVISIONS

DESCRIPTION	DATE	APPROVED

CLARK·NEXSEN
Architecture & Engineering
6160 Kempsville Circle, Suite 200A
Norfolk, Virginia 23502
757/455-5800
Fax 757/455-5638
http://www.clarknexsen.com

COMMONWEALTH OF VIRGINIA — No. 14090 — PROFESSIONAL ENGINEER — 6/16/99

APPROVED
ACTIVITY - SATISFACTORY TO
DATE
APPROVED
FOR CTO FOR COMMANDER NAVFAC
DATE 5/18/99

FMD	DESIGN	CTO
LEW3	DRAWN	
JWA	REVIEW	EJC
DRH	QC	
CEC	CHIEF ARCH./ENGR.	
PROJECT MANAGER		
FIRE PROTECTION		EJC
BRANCH MANAGER		JTM
DESIGN DIRECTOR		

DEPARTMENT OF THE NAVY
NAVAL FACILITIES ENGINEERING COMMAND
ATLANTIC DIVISION
NAVAL STATION NORFOLK, VIRGINIA
FLEET TRAINING CENTER NORFOLK, VIRGINIA

ENGINEERING TRAINING FACILITY ADDITION

CONTROL DIAGRAMS

CODE ID. NO. 80091 SIZE D
SCALE: AS SHOWN
CTO NO. 495075
STA. PROJ. NO. P-179
SPEC. NO. 05-97-7065
CONSTR. CONTR. NO. N62470-97-B-7065
NAVFAC DRAWING NO. 4395075
SHEET 131 OF 174

M7.6

8 7 6 5 4 3 2 1

D C B A

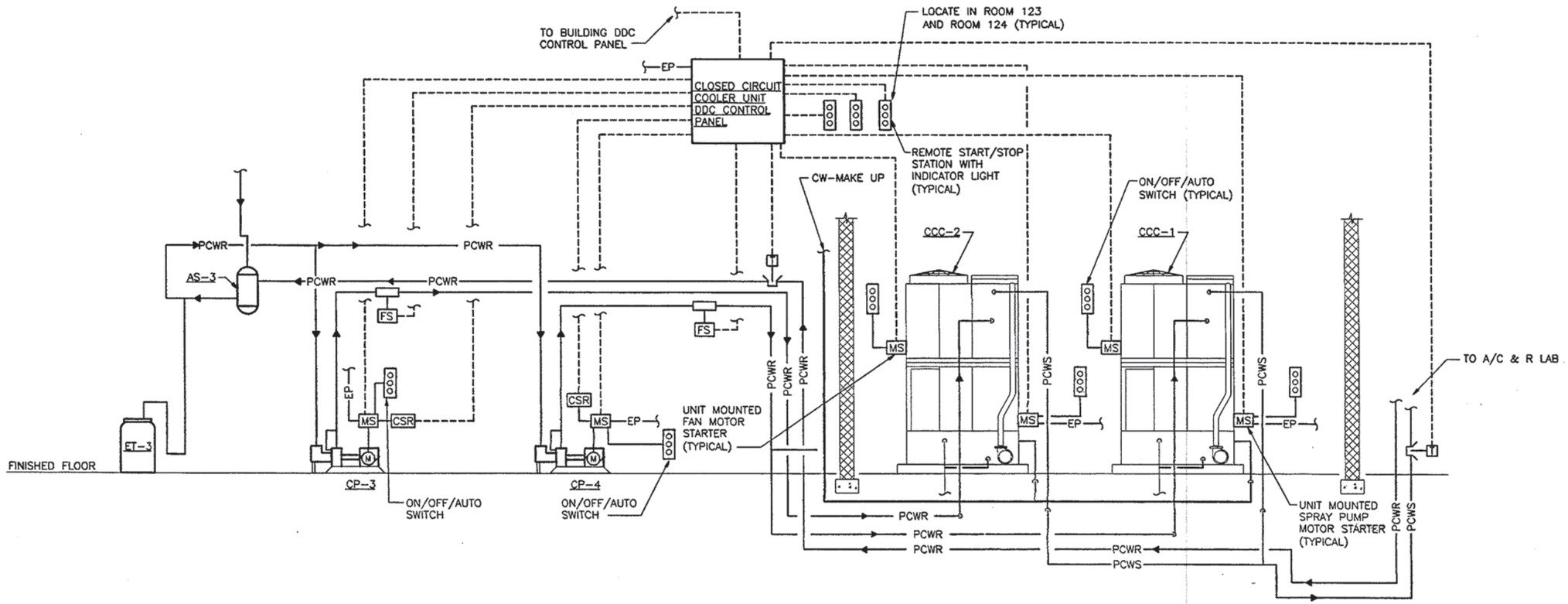

SEQUENCE OF OPERATION

THE PROCESS COOLING WATER PUMPS CP-3 AND CP-4 SHALL BE ENERGIZED BY THREE, REMOTELY LOCATED START/STOP PUSH BUTTON STATIONS LOCATED IN ROOM 123 AND ROOM 124 AS INDICATED ON THE DRAWINGS THROUGH THE CLOSED CIRCUIT COOLER DDC CONTROL PANEL. WHEN ANY OF THE THREE START/STOP STATIONS IS INDEXED TO "START", CP-3 SHALL BE ENERGIZED AND SHALL RUN CONTINUOUSLY. ON A DETECTION OF PROCESS COOLING WATER FLOW FROM CP-3, AS SENSED BY A FLOW SWITCH LOCATED IN THE PROCESS COOLING WATER DISCHARGE PIPING FROM CP-3, THE MINIMUM CAPACITY STAGE OF CCC-2 SHALL BE ENERGIZED (SPRAY PUMP AND FAN ARE "OFF").

ON A RISE IN THE PROCESS COOLING WATER RETURN (PCWR) TEMPERATURE ABOVE 35°C, AS SENSED BY A TEMPERATURE SENSOR LOCATED IN THE PCWR PIPING FROM THE A/C & R LAB, THE SPRAY PUMP FOR CCC-2 SHALL BE ENERGIZED. ON A FURTHER RISE IN THE PCWR TEMPERATURE, THE FIRST STAGE OF THE CCC-2 UNIT FAN SHALL BE ENERGIZED. ON A FURTHER RISE IN THE PCWR TEMPERATURE, THE SECOND STAGE OF THE CCC-2 UNIT FAN SHALL BE ENERGIZED.

ON A CONTINUED RISE IN THE PCWR TEMPERATURE, CP-4 SHALL BE ENERGIZED AND SHALL RUN CONTINUOUSLY. ON DETECTION OF PROCESS COOLING WATER FLOW FROM CP-4, AS SENSED BY A FLOW SWITCH LOCATED IN THE PROCESS COOLING WATER DISCHARGE PIPING FROM CP-4, THE MINIMUM CAPACITY OF STAGE CCC-1 SHALL BE ENERGIZED (SPRAY PUMP AND FAN ARE "OFF"). ON A FURTHER RISE IN THE PROCESS COOLING WATER RETURN (PCWR) TEMPERATURE, SPRAY PUMP FOR CCC-1 SHALL BE ENERGIZED. ON A FURTHER RISE IN THE PCWR TEMPERATURE, THE FIRST STAGE OF THE CCC-1 UNIT FAN SHALL BE ENERGIZED. ON A FURTHER RISE IN THE PCWR TEMPERATURE, THE SECOND STAGE OF THE CCC-1 UNIT FAN SHALL BE ENERGIZED.

ON A FALL IN THE PCWR TEMPERATURE, THE REVERSE OPERATION SHALL OCCUR. WHEN ALL OF THE REMOTE START/STOP STATIONS HAVE BEEN INDEXED TO "OFF", THE CLOSED CIRCUIT COOLERS AND THEIR RESPECTIVE CIRCULATING PUMPS SHALL BE DE-ENERGIZED. THE PCWS LEAVING WATER TEMPERATURE SETPOINT FOR CCC-1 AND CCC-2 SHALL BE 29.4° CENTIGRADE.

THE UNIT DDC CONTROL PANEL SHALL PROVIDE FOR THE SEQUENCING OF CCC-1 AND CCC-2 AND THEIR RESPECTIVE CIRCULATING PUMPS, CP-4 AND CP-3. THE SYSTEM CONTROL SHALL HAVE TEST MODE CAPABILITY TO FACILITATE SERVICING IN THE EVENT OF CONTROL FAILURE. THE UNIT DDC CONTROL PANEL SHALL HAVE PROVISIONS TO EVEN THE WEAR OF THE CLOSED CIRCUIT COOLERS AND SET A FIELD ADJUSTABLE OFF TIME FOR 5 TO 15 MINUTES TO LIMIT EXCESSIVE UNIT CYCLING. THE CLOSED CIRCUIT COOLER DDC CONTROL PANEL SHALL SEND STATUS SIGNALS TO THE BUILDING DDC CONTROL PANEL. CCC-1 AND CCC-2 AND THEIR ASSOCIATED PUMPS CP-4 AND CP-3, RESPECTIVELY, SHALL BE PROVIDED WITH ON/OFF/AUTO SWITCHES FOR LOCAL CONTROL WHEN DESIRED.

IF AT ANY TIME THE FLOW SENSOR FOR CCC-1 AND CCC-2, RESPECTIVELY, DETECTS A LOSS OF FLOW, CCC-1 AND CCC-2 AND THEIR CORRESPONDING PUMPS SHALL BE DE-ENERGIZED AND AN ALARM SHALL BE SENT TO THE BUILDING DDC CONTROL PANEL.

CLOSED CIRCUIT COOLER CONTROL DIAGRAM (CCC-1 AND CCC-2)

NO SCALE

REVISIONS

NO.	DESCRIPTION	DATE	APPROVED

CLARK•NEXSEN
Architecture & Engineering
6160 Kempsville Circle, Suite 200A
Norfolk, Virginia 23502
757/455-5800
Fax 757/455-5638
http://www.clarknexsen.com

COMMONWEALTH OF VIRGINIA — ENGINEER — 14890 — 4/4/99 — PROFESSIONAL

APPROVED
ACTIVITY - SATISFACTORY TO
DATE
APPROVED
FOR CO FOR COMMANDER NAVFAC
DATE 3/3/99

		EFD
FMD	DESIGN	
LEW3	DRAWN	
JWA	REVIEW	ETC
DRH	QC	
CEC	CHIEF ARCH./ ENGR.	
	PROJECT MANAGER	
	FIRE PROTECTION	EAT
	BRANCH MANAGER	VTM
	DESIGN DIRECTOR	JRM

DEPARTMENT OF THE NAVY
NAVAL STATION
NAVAL FACILITIES ENGINEERING COMMAND
ATLANTIC DIVISION
NORFOLK, VIRGINIA
FLEET TRAINING CENTER
NORFOLK, VIRGINIA
ENGINEERING TRAINING FACILITY ADDITION
CONTROL DIAGRAMS

CODE ID. NO. 80091	SIZE D
SCALE AS SHOWN	
EFD NO. 495076	
STA. PROJ. NO. P-179	
SPEC. NO. 05-97-7065	
CONSTR. CONTR. NO. N62470-97-B-7065	
NAVFAC DRAWING NO. 4395076	
SHEET 132 OF 174	
M7.7	

8 7 6 5 4 3 2 1

D C B A

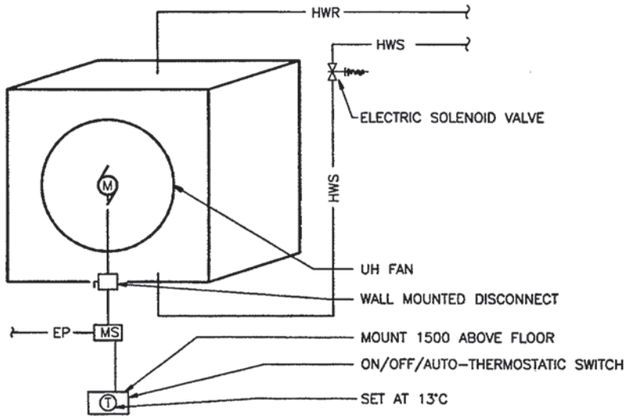

SEQUENCE OF OPERATION

WHEN THE POWER CIRCUIT IS ENERGIZED THE UNIT SHALL BE CONTROLLED BY THE ON–OFF–AUTO THERMOSTAT. IN THE ON POSITION, THE ELECTRIC SOLENOID VALVE SHALL BE OPEN AND THE FAN SHALL RUN CONTINUOUSLY. IN THE OFF POSITION, THE FAN SHALL BE OFF AND THE SOLENOID VALVE SHALL BE CLOSED. IN THE AUTO POSITION, THE FAN SHALL BE CONTROLLED BY THE SPACE THERMOSTAT.

ON A FALL IN SPACE TEMPERATURE, THE UNIT FAN SHALL BE CYCLED TO MAINTAIN SPACE TEMPERATURE. ON A RISE IN SPACE TEMPERATURE THE REVERSE OPERATION SHALL OCCUR.

UNIT HEATER CONTROL DIAGRAM

NO SCALE (TYPICAL ALL UNIT HEATERS)

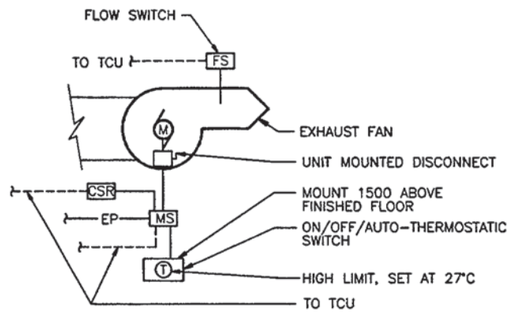

SEQUENCE OF OPERATION

WHEN THE POWER CIRCUIT IS ENERGIZED BY ITS DDC CONTROL PANEL OR TCU, THE FAN SHALL BE CONTROLLED BY THE ON–OFF–AUTO THERMOSTATIC SWITCH. IN THE "ON" POSITION THE FAN SHALL RUN CONTINUOUSLY, IN THE "OFF" POSITION THE FAN SHALL BE OFF, AND IN THE "AUTO" POSITION THE FAN SHALL, ON A RISE IN SPACE TEMPERATURE ABOVE THE SETPOINT OF 27°C, BE CYCLED TO LIMIT SPACE TEMPERATURE TO 27°C.

EXHAUST FAN CONTROL DIAGRAM

NO SCALE (TYPICAL FOR EF–6)

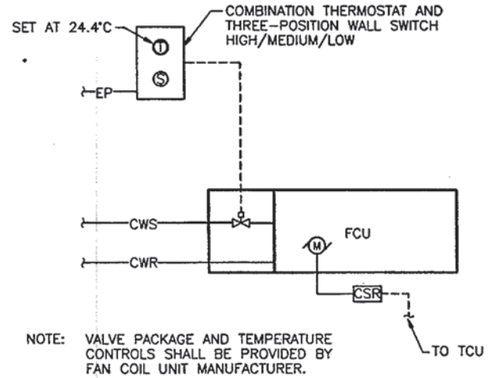

NOTE: VALVE PACKAGE AND TEMPERATURE CONTROLS SHALL BE PROVIDED BY FAN COIL UNIT MANUFACTURER.

SEQUENCE OF OPERATION

THE FAN COIL UNIT SHALL BE CONTROLLED BY ITS COMBINATION THERMOSTAT AND THREE–SPEED WALL SWITCH, AND THE UNIT FAN SHALL BE ENERGIZED AND SHALL RUN CONTINUOUSLY. ON A RISE IN SPACE TEMPERATURE, THE UNIT TWO–WAY CONTROL VALVE SHALL BE MODULATED TO MAINTAIN ITS SETPOINT. ON A FALL IN SPACE TEMPERATURE, THE REVERSE SHALL OCCUR.

THE UNIT FAN MAY BE MANUALLY INDEXED TO HIGH, MEDIUM, OR LOW FAN SPEED BY THE WALL SWITCH.

FAN COIL UNIT CONTROL DIAGRAM

NO SCALE (TYPICAL FOR FCU–1, 2, 3)

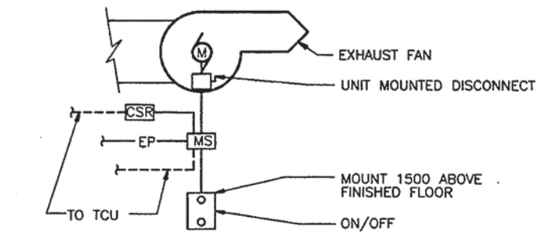

SEQUENCE OF OPERATION

WHEN THE POWER CIRCUIT IS ENERGIZED BY ITS TCU, THE FAN SHALL BE CONTROLLED BY THE ON–OFF SWITCH. IN THE "ON" POSITION THE FAN SHALL RUN CONTINUOUSLY. IN THE "OFF" POSITION THE FAN SHALL BE OFF.

BRAZING HOOD EXHAUST CONTROL DIAGRAM

NO SCALE (TYPICAL FOR EF–11)

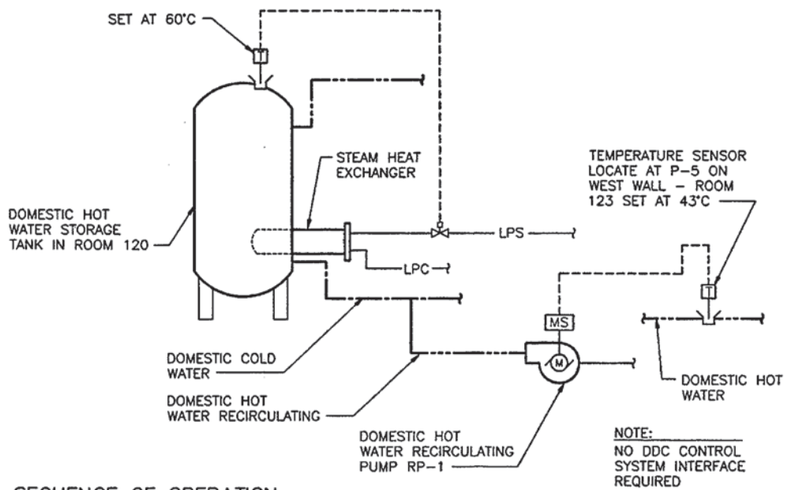

NOTE:
NO DDC CONTROL SYSTEM INTERFACE REQUIRED

SEQUENCE OF OPERATION

THE DOMESTIC HOT WATER STORAGE TANK STEAM HEAT EXCHANGER CONTROL VALVE SHALL BE MODULATED TO MAINTAIN THE HOT WATER TEMPERATURE IN THE TANK AS SENSED BY THE TANK MOUNTED TEMPERATURE SENSOR.

THE DOMESTIC HOT WATER RECIRCULATING PUMP SHALL BE CYCLED BY A TEMPERATURE SENSOR LOCATED IN THE DOMESTIC HOT WATER SUPPLY PIPING TO MAINTAIN ITS SETPOINT.

DOMESTIC HOT WATER HEATER CONTROL DIAGRAM

NO SCALE

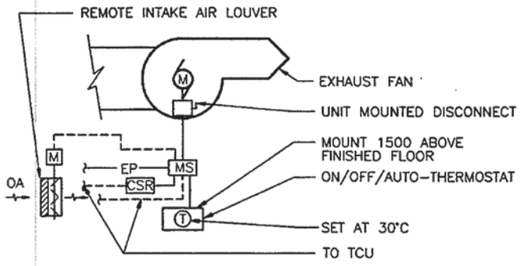

SEQUENCE OF OPERATION

WHEN THE POWER CIRCUIT IS ENERGIZED BY ITS TCU, THE FAN AND RESPECTIVE REMOTE CONTROL DAMPER SHALL BE CONTROLLED BY THE ON–OFF–AUTO THERMOSTAT. IN THE "ON" POSITION THE FAN SHALL RUN CONTINUOUSLY WITH DAMPER OPEN. IN THE "OFF" POSITION THE FAN SHALL BE OFF WITH DAMPER CLOSED AND IN THE "AUTO" POSITION THE FAN AND DAMPER SHALL ON A RISE IN SPACE TEMPERATURE ABOVE THE SET POINT OF 30°C, BE CYCLED TO LIMIT SPACE TEMPERATURE TO 30°C.

EXHAUST FAN CONTROL DIAGRAM

NO SCALE (TYPICAL FOR EF–7, 8)

REVISIONS

NO.	DESCRIPTION	DATE	APPROVED
STAL			

CLARK·NEXSEN
Architecture & Engineering
6160 Kempsville Circle, Suite 200A
Norfolk, Virginia 23502
757/455-5800
Fax 757/455-5638
http://www.clarknexsen.com

COMMONWEALTH OF VIRGINIA — REGISTERED PROFESSIONAL ENGINEER — No. 14099 — 2/18/99

APPROVED
ACTIVITY – SATISFACTORY TO
DATE
APPROVED
FOR EFD FOR COMMANDER NAVFAC
DATE 3/18/99

		EFD
FMD	DESIGN	
LEW3	DRAWN	
JWA	REVIEW	ETC
DRH	QC	
CEC	CHIEF ARCH./ DIOR.	
	PROJECT MANAGER	
	FIRE PROTECTION	
	BRANCH MANAGER	
	DESIGN DIRECTOR	

DEPARTMENT OF THE NAVY — NAVAL FACILITIES ENGINEERING COMMAND — NAVAL STATION NORFOLK, VIRGINIA — ATLANTIC DIVISION — NORFOLK, VIRGINIA

FLEET TRAINING CENTER
ENGINEERING TRAINING FACILITY ADDITION
CONTROL DIAGRAMS

CODE ID. NO. 80091 | SIZE D
SCALE: AS SHOWN
EFD NO. 495077
STA. PROJ. NO. P–179
SPEC. NO. 05–97–7065
CONSTR. CONTR. NO. N62470–97–B–7065
NAVFAC DRAWING NO. 4395077
SHEET 133 OF 174

M7.8

8 | 7 | 6 | 5 | 4 | 3 | 2 | 1

D C B A

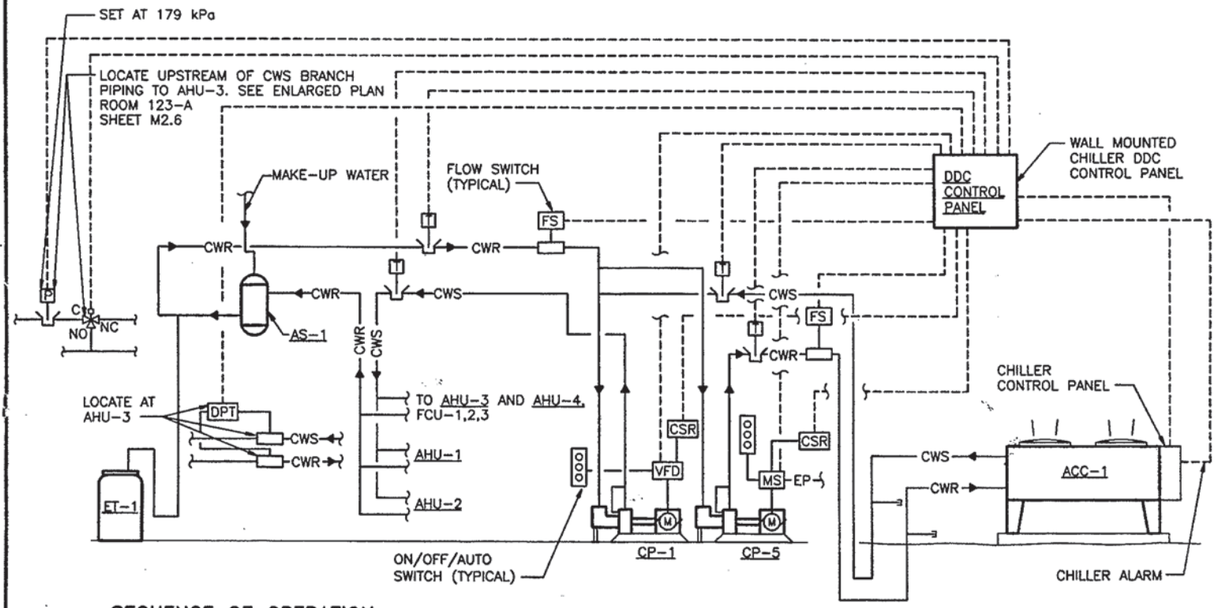

SEQUENCE OF OPERATION

THE CHILLER PUMP CP-5 SHALL BE ENERGIZED BY THE BUILDING DDC CONTROL SYSTEM. UPON SYSTEM STARTUP AND UPON VERIFICATION OF FLOW BY A FLOW SWITCH LOCATED IN THE CHILLED WATER RETURN PIPING TO ACC-1, THE MINIMUM CAPACITY STAGE OF ACC-1 SHALL BE ACTIVATED TO SATISFY THE BUILDING COOLING REQUIREMENT. UPON A RISE IN THE CHILLED WATER SUPPLY TEMPERATURE FROM ACC-1, AS SENSED BY A TEMPERATURE SENSOR LOCATED IN THE CHILLED WATER SUPPLY PIPING FROM CP-1, ADDITIONAL CAPACITY STAGES OF THE CHILLER SHALL BE ENERGIZED. UPON A FALL IN SUPPLY WATER TEMPERATURE, THE REVERSE SEQUENCE OF CONTROL SHALL OCCUR. THE SUPPLY WATER TEMPERATURE SETPOINT SHALL BE 7.0°C. UPON LOSS OF WATER FLOW IN THE CHILLER CIRCUIT, AS SENSED BY THE FLOW SWITCH, THE CHILLER CONTROLS SHALL BE DE-ENERGIZED. THE UNIT MOUNTED CHILLER CONTROL PANEL SHALL SEND STATUS AND ALARM SIGNALS TO THE CHILLER DDC CONTROL PANEL.

THE CHILLED WATER PUMP CP-1 SHALL BE ENERGIZED BY THE BUILDING DDC CONTROL PANEL. A FLOW SWITCH LOCATED IN THE DISCHARGE PIPING FOR THE PUMP SHALL SEND A SIGNAL TO THE BUILDING DDC CONTROL PANEL INDICATING A POSITIVE WATER FLOW FOR THE PUMP. ON LOSS OF FLOW FROM THE PUMP, A TROUBLE SIGNAL SHALL BE SENT TO THE BUILDING DDC CONTROL PANEL.

THE DDC SYSTEM SHALL CONTROL THE CHILLED WATER PUMP CP-1, THROUGH THE VARIABLE FREQUENCY DRIVE, TO MAINTAIN A DIFFERENTIAL PRESSURE OF 140 kPa, AS SENSED BY THE REMOTE DIFFERENTIAL PRESSURE SENSOR/TRANSMITTER LOCATED AS INDICATED. THE DDC SYSTEM SHALL MONITOR THE CHILLED WATER FLOW, AS SENSED BY THE REMOTE FLOW SENSOR/TRANSMITTER LOCATED IN THE CHILLED WATER RETURN PIPING.

THE BUILDING CHILLED WATER THREE WAY-BYPASS VALVE SHALL BE CONTROLLED BY THE BUILDING DDC CONTROL SYSTEM TO PROTECT THE CHILLED WATER CIRCULATING PUMP AT LOW LOAD/LOW FLOW CONDITIONS. ON A RISE IN SYSTEM PRESSURE ABOVE ITS SETPOINT OF 179 kPa, AS SENSED BY THE PRESSURE SENSOR LOCATED IN THE CHILLED WATER SUPPLY PIPING, THE THREE WAY BYPASS VALVE LOCATED IN THE CHILLED WATER SUPPLY PIPING, AS INDICATED ON THE DRAWINGS, SHALL BE MODULATED TO MAINTAIN ITS SETPOINT AND TO PREVENT THE CIRCULATING PUMPS FROM GOING TO SHUTOFF HEAD AND OVERHEATING.

IN THE EVENT OF THE FAILURE OF THE REMOTE DIFFERENTIAL PRESSURE SENSOR/TRANSMITTER, THE VARIABLE FREQUENCY DRIVE OF THE CHILLED WATER PUMP SHALL MAINTAIN 100 PERCENT SPEED. RESET SHALL BE AUTOMATIC UPON REPLACEMENT OF THE REMOTE DIFFERENTIAL PRESSURE SENSOR/TRANSMITTER.

A CHILLED WATER PUMP FAILURE OR VARIABLE FREQUENCY DRIVE FAILURE SHALL BE DISPLAYED ON THE DDC COMPUTER MONITOR.

CHILLER CONTROL DIAGRAM (ACC-1)

NO SCALE

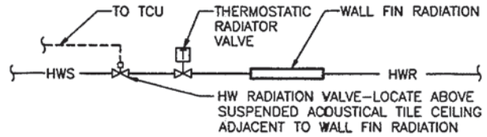

SEQUENCE OF OPERATION

WHEN OUTSIDE AIR TEMPERATURE FALLS BELOW 15°C, THE TCU SHALL OPEN THE TWO POSITION HOT WATER RADIATION VALVE FOR THE WALL FIN RADIATION. THE WALL FIN RADIATION SHALL BE CONTROLLED BY ITS THERMOSTATIC RADIATOR VALVE TO MAINTAIN ITS SET POINT OF 20°C. ON A RISE IN OUTSIDE AIR TEMPERATURE ABOVE 21°C, THE REVERSE OPERATION SHALL OCCUR.

HOT WATER RADIATION CONTROL DIAGRAM (TYPICAL FOR WF-1, 2, 3)

NO SCALE

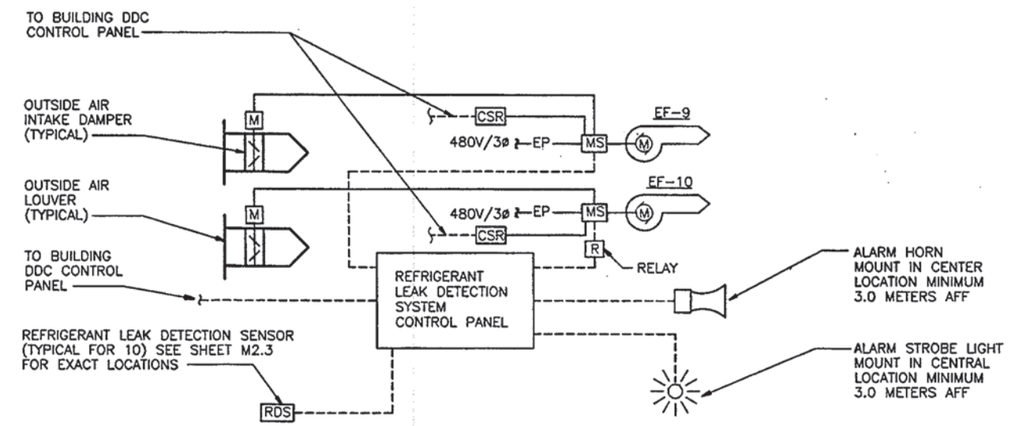

SEQUENCE OF OPERATION

THE PACKAGED REFRIGERANT LEAK DETECTION SYSTEM SHALL BE MANUALLY ENERGIZED AT THE REFRIGERANT LEAK DETECTION SYSTEM CENTRAL CONTROL PANEL LOCATED IN ROOM 123 (A/C & R LAB) AS INDICATED ON THE DRAWINGS AND SHALL RUN CONTINUOUSLY. THE SETPOINTS FOR TRIGGERING THE REFRIGERANT LEAK DETECTION SYSTEM CONTROL PANEL SHALL BE FIELD ADJUSTABLE.

ON DETECTION OF 200 PARTS PER MILLION (PPM) OF REFRIGERANT FROM ANY OF THE REMOTELY LOCATED REFRIGERANT LEAK DETECTION SENSORS, THE CENTRAL CONTROL PANEL SHALL GO INTO AN "ALARM" MODE AND ACTIVATE THE ALARM STROBE LIGHT AND AN INDICATOR LIGHT SHALL INDICATE THE REFRIGERANT DETECTION SENSOR WHICH HAS BEEN ACTIVATED AND SHALL SEND AN ALARM SIGNAL TO THE BUILDING DDC CONTROL PANEL. ON A CONTINUED RISE IN THE CONCENTRATION OF REFRIGERANT DETECTED TO 300 PPM, THE CENTRAL CONTROL PANEL SHALL GO INTO A "SPILL" MODE AND SHALL ACTIVATE THE ALARM HORN AND ENERGIZE REFRIGERANT PURGE EXHAUST FANS EF-9 AND EF-10 AND SHALL SEND AN ALARM SIGNAL TO THE BUILDING DDC CONTROL PANEL. THE CENTRAL REFRIGERANT DETECTION SYSTEM CONTROL PANEL SHALL REQUIRE MANUAL RESET. WHEN THE CENTRAL CONTROL PANEL IS MANUALLY RESET THE ALARM STROBE LIGHT AND HORN SHALL BE DE-ENERGIZED AND EXHAUST FANS EF-9 AND EF-10 SHALL BE DE-ENERGIZED AND THE ALARM SIGNAL TO THE DDC CONTROL PANEL SHALL BE CLEARED.

REFRIGERANT LEAK DETECTION SYSTEM CONTROL DIAGRAM

NO SCALE

REVISIONS

DESCRIPTION	DATE	APPROVED

CLARK NEXSEN
Architecture & Engineering
6160 Kempsville Circle, Suite 200A
Norfolk, Virginia 23502
757/455-5800
Fax 757/455-5638
http://www.clarknexsen.com

COMMONWEALTH OF VIRGINIA ENGINEER No. 14099 PROFESSIONAL

APPROVED
ACTIVITY - SATISFACTORY TO
DATE
APPROVED
FOR CTO FOR COMMANDER NAVFAC
DATE 3/27/97

NE		CTO
FMD	DESIGN	
LEW3	DRAWN	
JWA	REVIEW	CTO
DRH	QC	
CEC	CHIEF ARCH./ ENGR.	
	PROJECT MANAGER	
	FIRE PROTECTION	BJT
	BRANCH MANAGER	VTM
	DESIGN DIRECTOR	JWA

DEPARTMENT OF THE NAVY
NAVAL STATION
NAVAL FACILITIES ENGINEERING COMMAND
ATLANTIC DIVISION
NORFOLK, VIRGINIA
FLEET TRAINING CENTER
NORFOLK, VIRGINIA
ENGINEERING TRAINING FACILITY ADDITION
CONTROL DIAGRAMS

CODE ID. NO. 80091 SIZE D
SCALE AS SHOWN
CTO NO. 495078
STA PROJ. NO. P-179
SPEC. NO. 05-97-7065
CONSTR. CONTR. NO. N62470-97-B-7065
NAVFAC DRAWING NO. 4395078
SHEET 134 OF 174
M7.9

D C B A

8 7 6 5 4 3 2 1

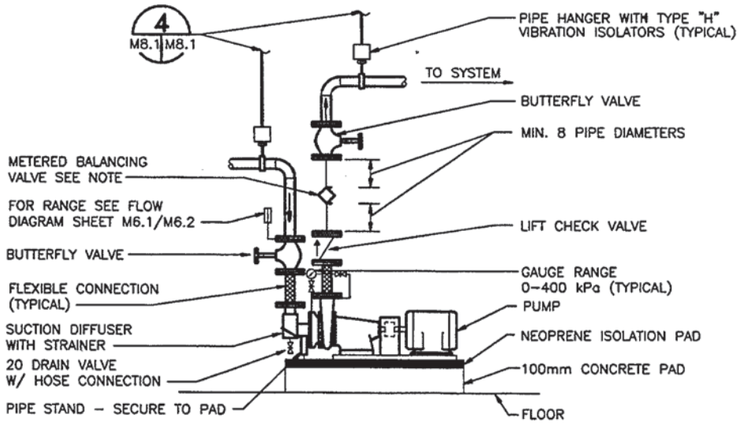

NOTE:

THE BALANCING VALVE SHALL BE INSTALLED BY THE CONTRACTOR IN CONFORMANCE WITH VALVE MANUFACTURER'S RECOMMENDED SPACING UP/DOWNSTREAM FROM PIPE CHANGES IN DIRECTION AND/OR OTHER VALVES/COMPONENTS IN THE PIPING.

1 BASE MOUNTED PUMP PIPING DETAIL (TYPICAL)

M6.1,M6.2 M8.1 NO SCALE

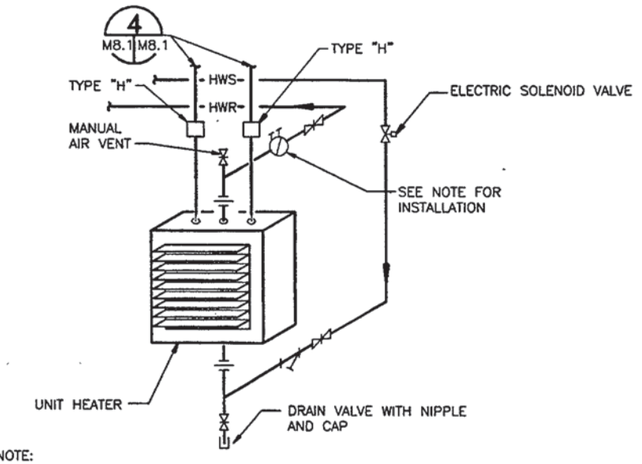

NOTE:

THE FLOW CONTROL BALANCING VALVES SHALL BE INSTALLED BY THE CONTRACTOR IN CONFORMANCE WITH VALVE MANUFACTURER'S RECOMMENDED SPACING UP/DOWNSTREAM FROM PIPE CHANGES IN DIRECTION AND/OR OTHER VALVES/COMPONENTS IN THE PIPING.

2 HOT WATER UNIT HEATER PIPING DETAIL

M2.1,M2.2,M3.1 M8.1 NO SCALE

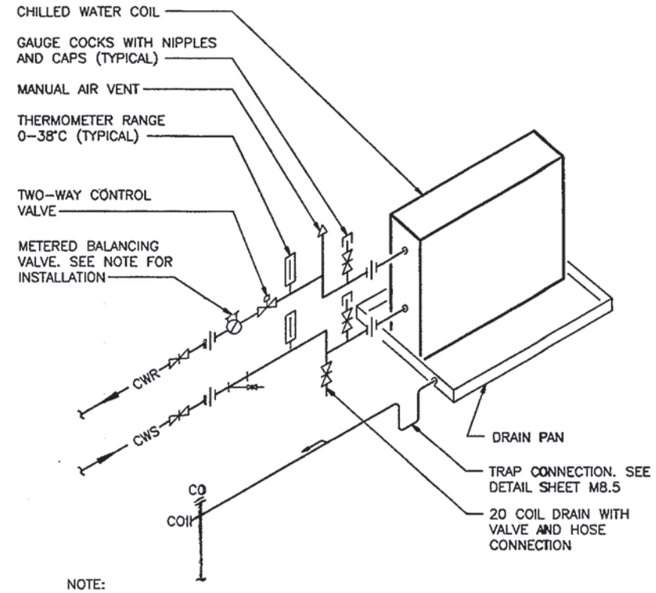

NOTE:

THE FLOW CONTROL BALANCING VALVES SHALL BE INSTALLED BY THE CONTRACTOR IN CONFORMANCE WITH VALVE MANUFACTURER'S RECOMMENDED SPACING UP/DOWNSTREAM FROM PIPE CHANGES IN DIRECTION AND/OR OTHER VALVES/COMPONENTS IN THE PIPING.

TYPICAL CHILLED WATER COIL PIPING DETAIL

NO SCALE (AHU'S, FCU'S)

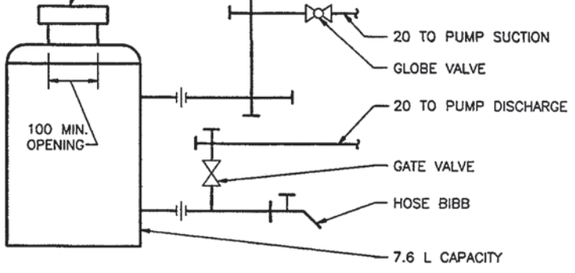

3 CHEMICAL SHOT FEEDER DETAIL

M6.1,M6.2 M8.1 NO SCALE

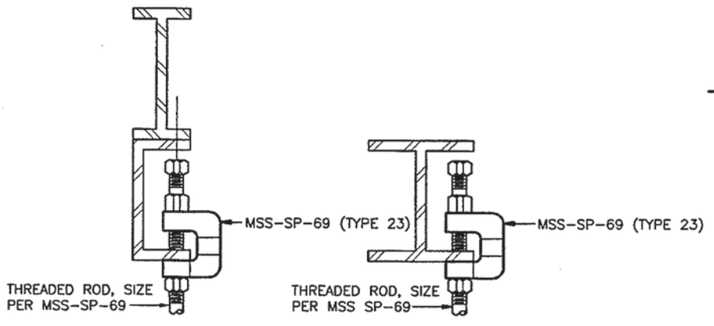

HANGER SUPPORT AT CHANNELS AND BEAMS

4 CONNECTION TO STRUCTURE DETAIL

M8.1,M8.2,M8.5 M8.1 NO SCALE

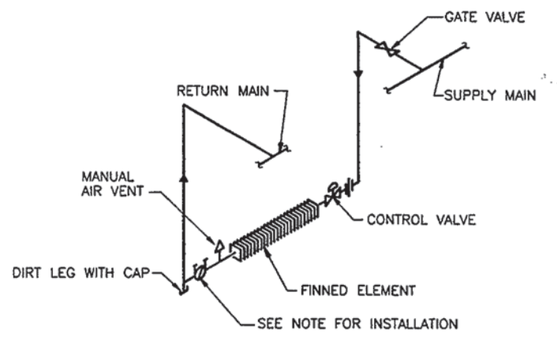

NOTE:

1. THE FLOW CONTROL BALANCING VALVES SHALL BE INSTALLED BY THE CONTRACTOR IN CONFORMANCE WITH VALVE MANUFACTURER'S RECOMMENDED SPACING UP/DOWNSTREAM FROM PIPE CHANGES IN DIRECTION AND/OR OTHER VALVES/COMPONENTS IN THE PIPING.

TYPICAL DOWN FEED HOT WATER FINTUBE PIPING DETAIL

NO SCALE

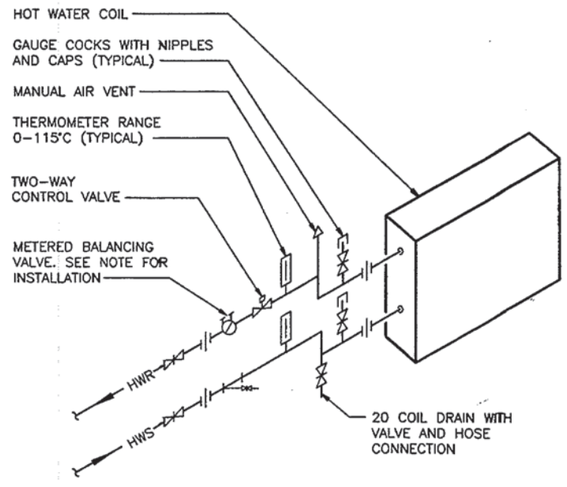

NOTE:

THE FLOW CONTROL BALANCING VALVES SHALL BE INSTALLED BY THE CONTRACTOR IN CONFORMANCE WITH VALVE MANUFACTURER'S RECOMMENDED SPACING UP/DOWNSTREAM FROM PIPE CHANGES IN DIRECTION AND/OR OTHER VALVES/COMPONENTS IN THE PIPING.

TYPICAL HOT WATER COIL PIPING DETAIL

NO SCALE (AHU'S, VAV'S)

REVISIONS

DESCRIPTION	STA.	DATE	APPROVED

CLARK·NEXSEN
Architecture & Engineering
6160 Kempsville Circle, Suite 200A
Norfolk, Virginia 23502
757/455-5800
Fax 757/455-5638
http://www.clarknexsen.com

COMMONWEALTH OF VIRGINIA No. 14099 PROFESSIONAL ENGINEER 2/18/99

APPROVED
ACTIVITY – SATISFACTORY TO
DATE
APPROVED
FOR CTO FOR COMMANDER NAVFAC
DATE 3/18/99

FMD	DESIGN	CTO
LEW3	DRAWN	
JWA	REVIEW	CTO
DRH	QC	
CEC	CHIEF ARCH./ENGR.	
PROJECT MANAGER		
FIRE PROTECTION		
BRANCH MANAGER		
DESIGN DIRECTOR		

DEPARTMENT OF THE NAVY
NAVAL STATION
ATLANTIC DIVISION
NAVAL FACILITIES ENGINEERING COMMAND
NORFOLK, VIRGINIA
FLEET TRAINING CENTER
NORFOLK, VIRGINIA
ENGINEERING TRAINING FACILITY ADDITION
DETAILS

CODE ID. NO. 80091 SIZE D
SCALE AS SHOWN
EFD NO. 495079
STA. PROJ. NO. P–179
SPEC. NO. 05–97–7065
CONSTR. CONTR. NO. N62470–97–B–7065
NAVFAC DRAWING NO. 4395079
SHEET 135 OF 174

M8.1

D C B A

8 7 6 5 4 3 2 1

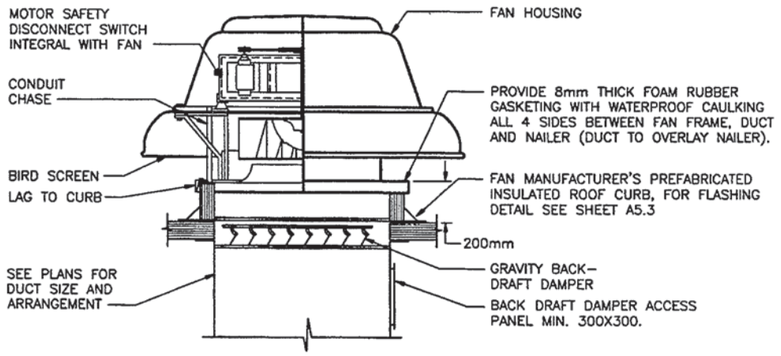

TYPICAL ROOF EXHAUST FAN DETAIL

NO SCALE

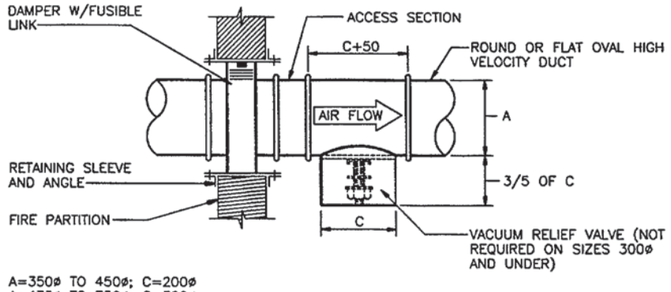

A=350ø TO 450ø; C=200ø
A=475ø TO 750ø; C=300ø

1 HIGH VELOCITY DUCT FIRE DAMPER/ VACUUM RELIEF DETAIL

M2.1,M2.4,M2.7 M8.2 NO SCALE

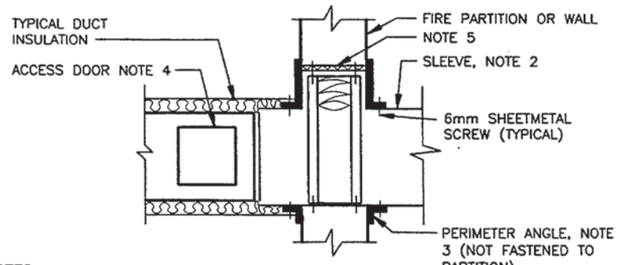

NOTES

1. PROVIDE 100% FREE AREA FIRE DAMPER. FOLLOW DAMPER MANUFACTURER INSTRUCTIONS, INCLUDING FASTENER OPTIONS AND GAGES FOR SLEEVE AND PERIMETER ANGLES. FIRE DAMPERS MUST BE INSTALLED IN THE PARTITION, NOT OUTSIDE THE PENETRATION
2. GALVANIZED SLEEVE GAGE NOT LESS THAN CONNECTING DUCT. FASTEN SLEEVE TO DAMPER FRAME AND TO PERIMETER ANGLES.
3. PERIMETER ANGLES = GALVANIZED STEEL, NOT LESS THAN 38mmX38mm 2mm, TO PROVIDE 25mm OVERLAP OF OPENING AN ALL 4 SIDES.
4. ACCESS DOOR = SIZE AND LOCATION TO PERMIT SERVICING THE FUSIBLE LINK OR LINKS.
5. PROVIDE 6mm TO 13mm CLEARANCE ON HEIGHT AND WIDTH FILL OPEN SPACE WITH ROCK WOOL FIRE STOP FIBER.

TYPICAL FIRE DAMPER INSTALLATION DETAIL

NO SCALE

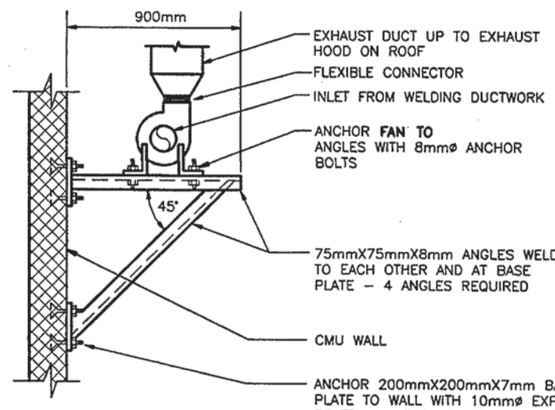

2 BRAZING EXHAUST FAN (EF-11) MOUNTING DETAIL

M2.3 M8.2 NO SCALE

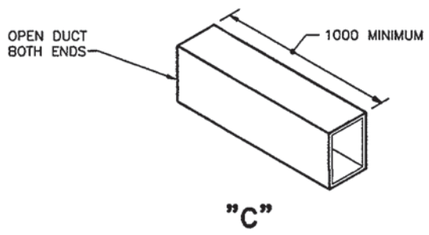

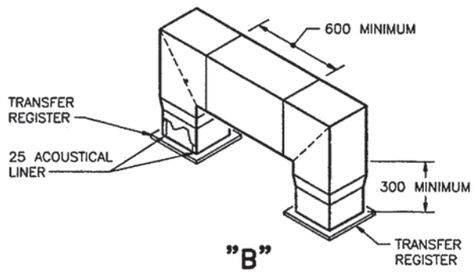

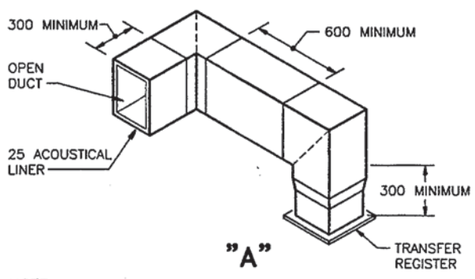

NOTE:
SIZE OF TRANSFER DUCT SHOWN ON PLAN INDICATES ACTUAL CLEAR INSIDE DIMENSIONS. SIZES OF TRANSFER DUCTS VARY.

TYPICAL ACOUSTICALLY LINED TRANSFER DUCT DETAIL

NO SCALE

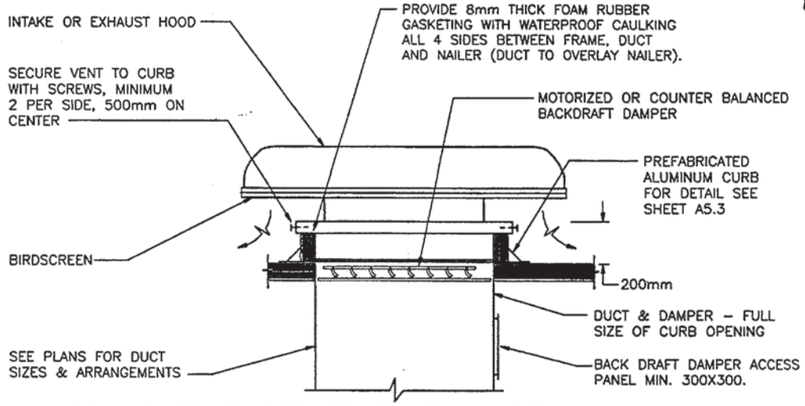

ROOF MOUNTED INTAKE OR EXHAUST HOOD DETAIL

NO SCALE

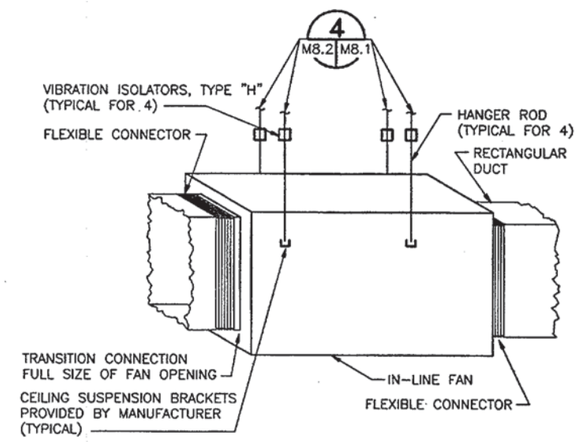

TYPICAL FRESH AIR AND IN-LINE EXHAUST FAN MOUNTING DETAIL

NO SCALE

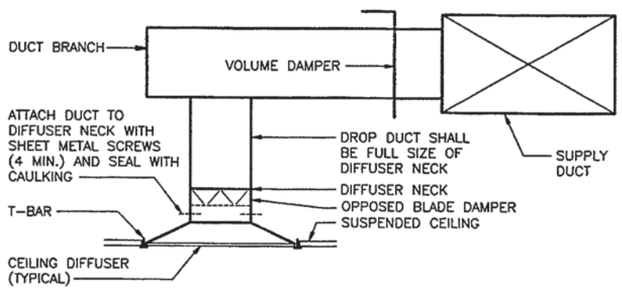

TYPICAL DIFFUSER CONNECTION DETAIL

NO SCALE

REVISIONS

DESCRIPTION	DATE	APPROVED

CLARK NEXSEN
Architecture & Engineering
6160 Kempsville Circle, Suite 200A
Norfolk, Virginia 23502
757/455-5800
Fax 757/455-5638
http://www.clarknexsen.com

COMMONWEALTH OF VIRGINIA — No. 14090 — 2/18/99 — PROFESSIONAL ENGINEER

APPROVED
ACTIVITY – SATISFACTORY TO
DATE
APPROVED
FOR CTO FOR COMMANDER NAVFAC
DATE 2/17/99

		CTO
FMD	DESIGN	
LEW3	DRAWN	
JWA	REVIEW	ETC
DRH	QC	
CEC	CHIEF ARCH./ ENGR.	

PROJECT MANAGER
FIRE PROTECTION BJT
BRANCH MANAGER VTM
DESIGN DIRECTOR JWA

DEPARTMENT OF THE NAVY
NAVAL STATION
ATLANTIC DIVISION
NAVAL FACILITIES ENGINEERING COMMAND
NORFOLK, VIRGINIA
FLEET TRAINING CENTER
ENGINEERING TRAINING FACILITY ADDITION
DETAILS

CODE ID. NO. 80091 | SIZE D
SCALE: AS SHOWN
CTO NO. 495080
STA. PROJ. NO. P-179
SPEC. NO. 05-97-7065
CONTR. CONTR. NO. N62470-97-B-7065
NAVFAC DRAWING NO. 4395080
SHEET 136 OF 174

M8.2

8 | 7 | 6 | 5 | 4 | 3 | 2 | 1

D C B A

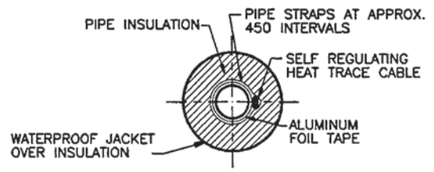

SECTION THRU PIPE
NO SCALE

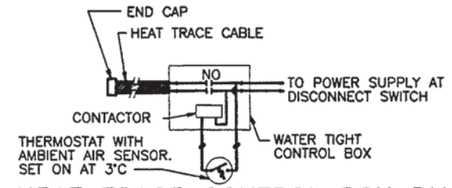

HEAT TRACE CONTROL BOX DIAGRAM
NO SCALE

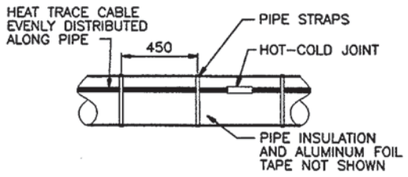

INSTALLATION DETAIL
NO SCALE

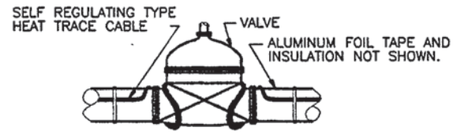

INSTALLATION AT VALVES
NO SCALE

NOTES: 1. PROVIDE WEATHER RESISTANT LABELING ON EXTERIOR OF JACKET IDENTIFYING PIPES AS BEING "ELECTRIC TRACED" WITH VOLTAGE INDICATED.

2. PROVIDE HEAT TAPE UNDER EXPOSED INSULATION WRAP @ 25 WATTS/METER. PROVIDE TAPE RATED @ 25 WATTS/METER.

(1) HEAT TRACING DETAILS
M6.1, M6.2, M8.3 NO SCALE

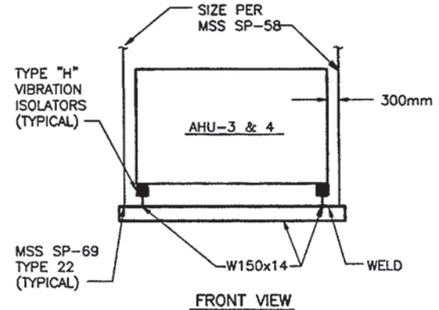

FRONT VIEW

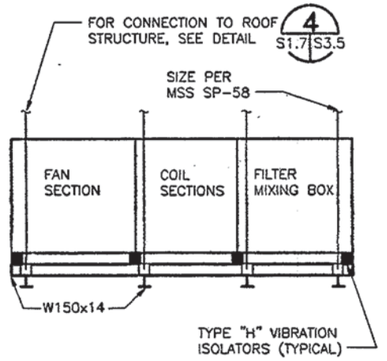

SIDE VIEW

AHU-3 & AHU-4 MOUNTING DETAIL
NO SCALE

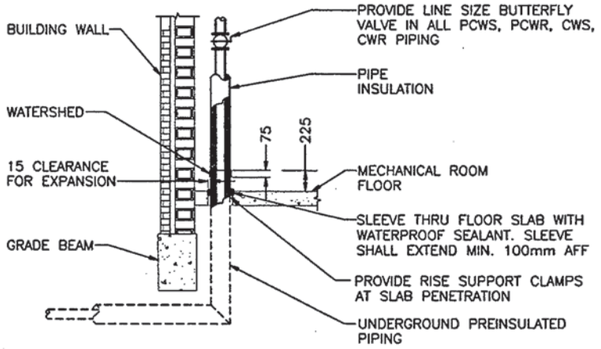

(2) CHILLED WATER AND PROCESS WATER PIPE BUILDING ENTRY DETAIL
M6.2, M8.3 NO SCALE

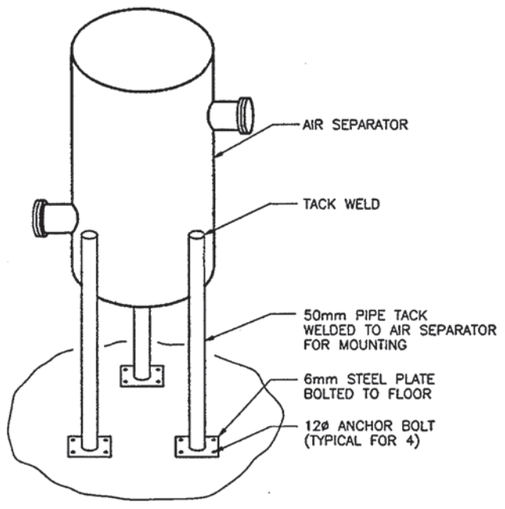

AIR SEPARATOR MOUNTING DETAIL
NO SCALE

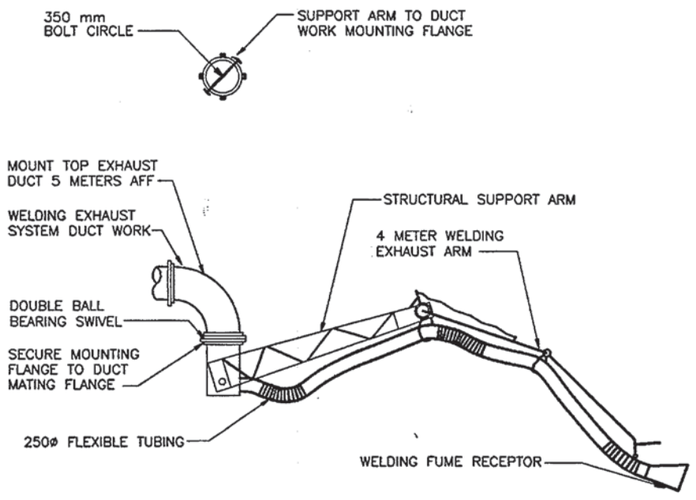

(3) BRAZING EXHAUST ARM DETAIL
M4.1, M8.3 NO SCALE

REVISIONS

DESCRIPTION	DATE	APPROVED

CLARK·NEXSEN
Architecture & Engineering
6160 Kempsville Circle, Suite 200A
Norfolk, Virginia 23502
757/455-5800
Fax 757/455-5638
http://www.clarknexsen.com

COMMONWEALTH OF VIRGINIA — ENGINEER — No. 14090 — PROFESSIONAL — 2/19/99

APPROVED
ACTIVITY - SATISFACTORY TO
DATE
APPROVED
FOR CTO FOR COMMANDER NAVFAC
DATE 3/18/99

		CTO
FMD	DESIGN	
LEW3	DRAWN	
JWA	REVIEW	ETC.
DRH	QC	
CEC	CHIEF ARCH./ ENGR.	
PROJECT MANAGER		
FIRE PROTECTION	BT	
BRANCH MANAGER	JTM	
DESIGN DIRECTOR	JCB	

DEPARTMENT OF THE NAVY
NAVAL FACILITIES ENGINEERING COMMAND
NAVAL STATION
ATLANTIC DIVISION
NORFOLK, VIRGINIA
FLEET TRAINING CENTER
NORFOLK, VIRGINIA
ENGINEERING TRAINING FACILITY ADDITION
DETAILS

CODE ID. NO. 80091 | SIZE D
SCALE: AS SHOWN
CTO NO. 495081
STA. PROJ. NO. P-179
SPEC. NO. 05-97-7065
CONSTR. CONTR. NO. N62470-97-B-7065
NAVFAC DRAWING NO. 4395081
SHEET 137 OF 174

M8.3

8 7 6 5 4 3 2 1

D C B A

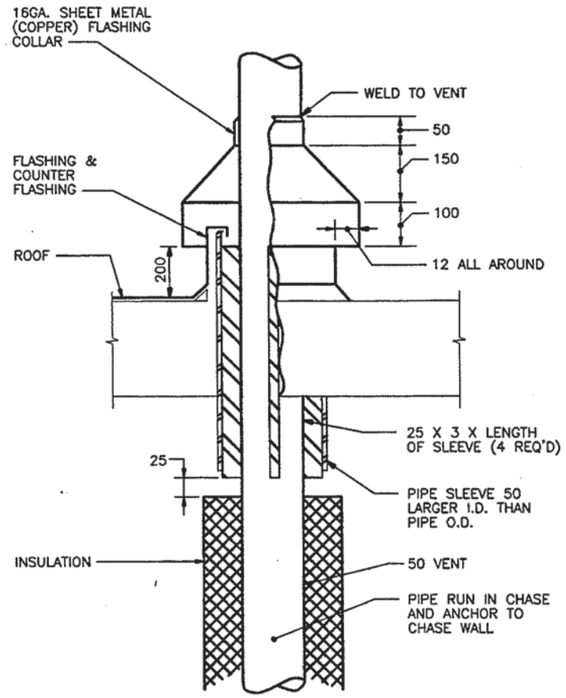

1 HOT VENT PIPE DETAIL
M6.2 M8.4 NO SCALE

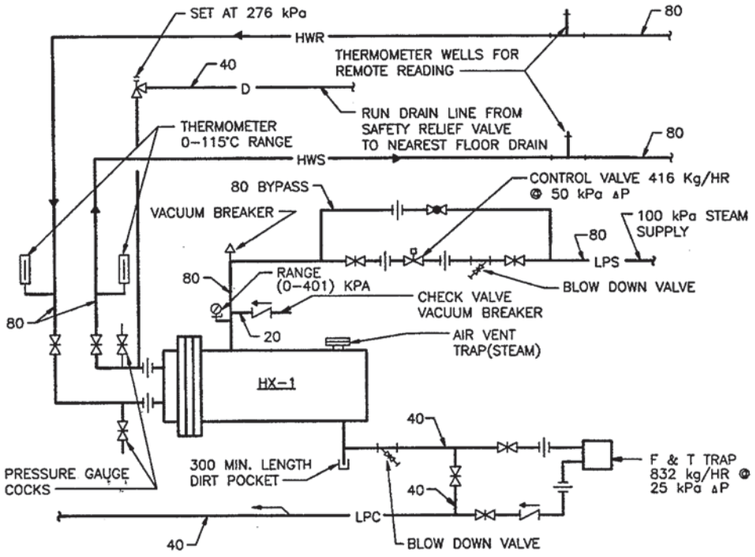

2 CONVERTOR PIPING DETAIL
M6.1 M8.4 NO SCALE

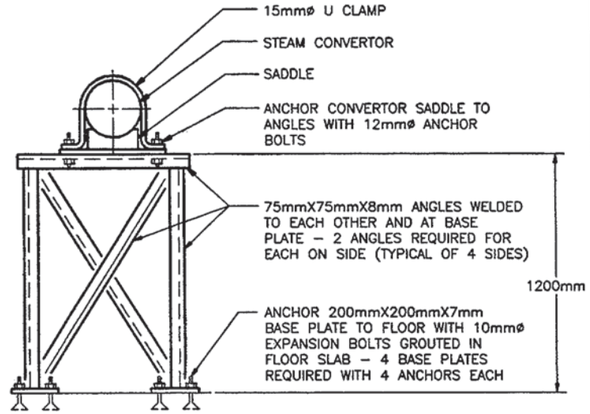

3 CONVERTOR SUPPORT DETAIL
M6.1 M8.4 NO SCALE

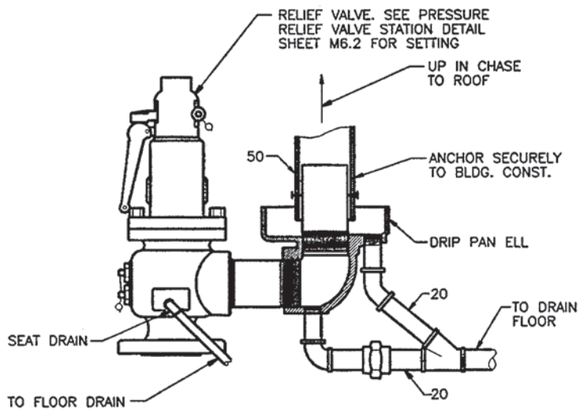

4 STEAM RELIEF VALVE DRIP PAN ELL DETAIL
M6.2 M8.4 NO SCALE

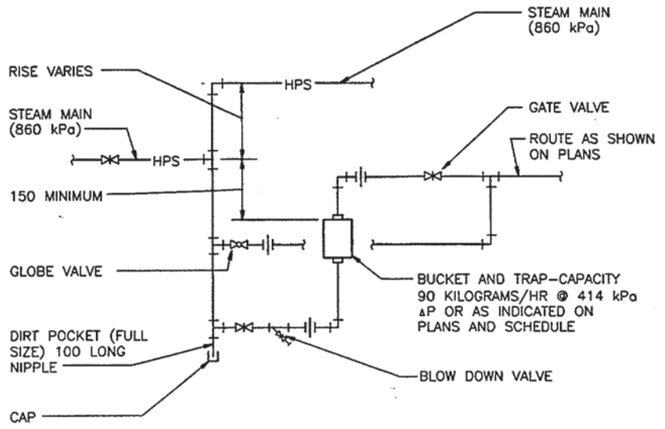

TYPICAL HIGH PRESSURE DRIP DETAIL
NO SCALE

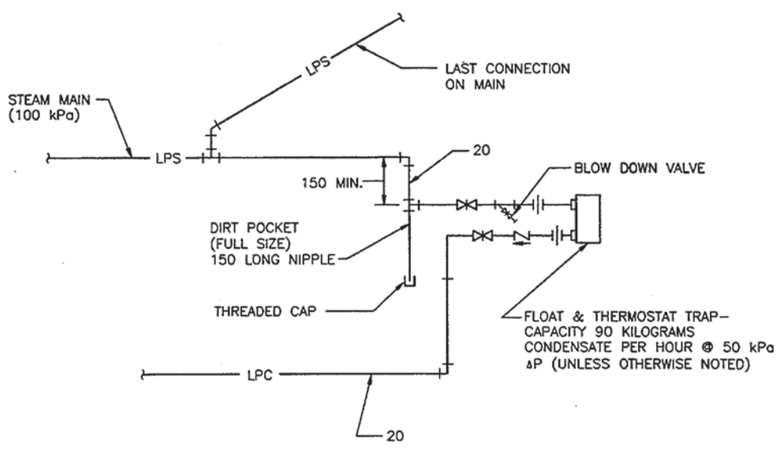

TYPICAL LOW PRESSURE END OF MAIN DETAIL
NO SCALE

REVISIONS

NO.	DESCRIPTION	DATE	APPROVED

CLARK·NEXSEN
Architecture & Engineering
6160 Kempsville Circle, Suite 200A
Norfolk, Virginia 23502
757/455-5800
Fax 757/455-5638
http://www.clarknexsen.com

COMMONWEALTH OF VIRGINIA — WILLIAM HOWARD WORK, JR. — No. 14090 — 2/18/99 — PROFESSIONAL ENGINEER

APPROVED
ACTIVITY – SATISFACTORY TO
DATE
APPROVED
FOR EFD FOR COMMANDER NAVFAC
DATE 3/18/99

		EFD
FMD	DESIGN	
LEW3	DRAWN	
JWA	REVIEW	
DRH	QC	
CEC	CHIEF ARCH./ ENGR.	
	PROJECT MANAGER	
	FIRE PROTECTION	
	BRANCH MANAGER	
	DESIGN DIRECTOR	

DEPARTMENT OF THE NAVY — NAVAL FACILITIES ENGINEERING COMMAND — NAVAL STATION — ATLANTIC DIVISION — FLEET TRAINING CENTER — NORFOLK, VIRGINIA

ENGINEERING TRAINING FACILITY ADDITION

DETAILS

CODE ID. NO. 80091 — SIZE D
SCALE: AS SHOWN
EFD NO. 495082
STA. PROJ. NO. P-179
SPEC. NO. 05-97-7065
CONSTR. CONTR. NO. N62470-97-8-7065
NAVFAC DRAWING NO. 4395082
SHEET 138 OF 174

M8.4

8 7 6 5 4 3 2 1

D C B A

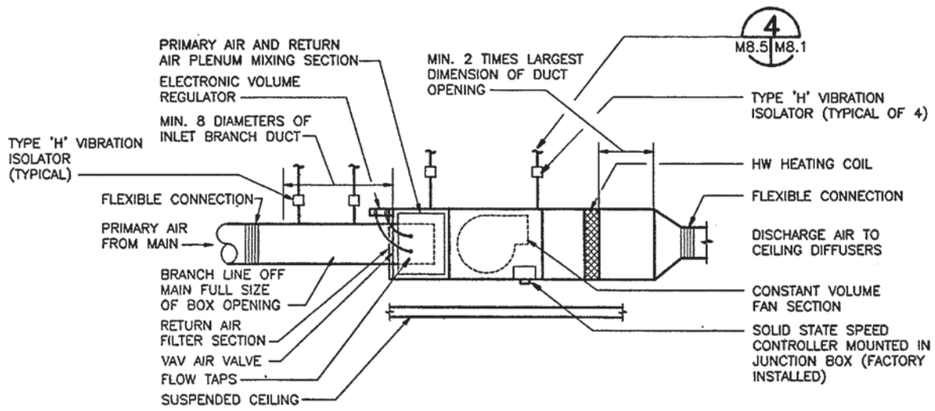

TYPICAL SERIES FAN POWERED VARIABLE AIR VOLUME BOX DETAIL

NO SCALE

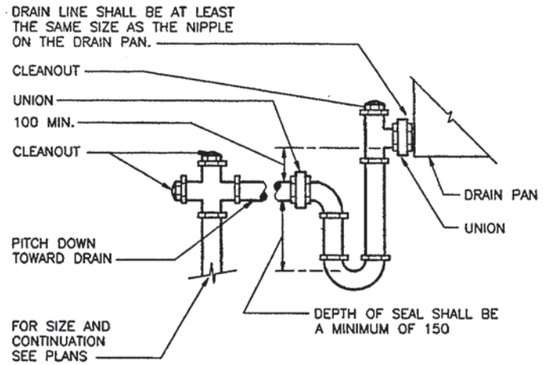

TYPICAL CONDENSATE DRAIN TRAP DETAIL

NO SCALE

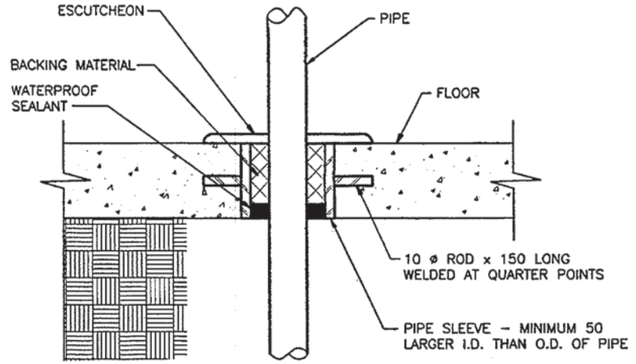

TYPICAL FLOOR PIPE PENETRATION DETAIL

NO SCALE

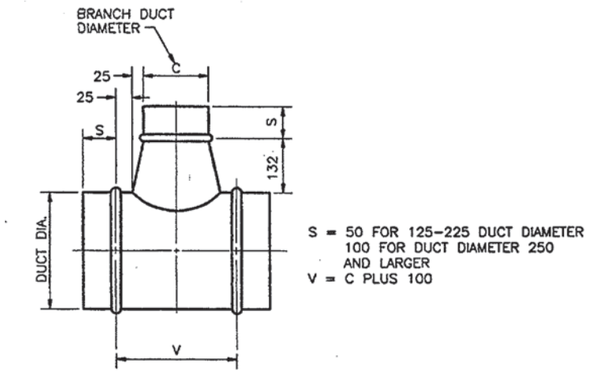

TYPICAL CONICAL TEE DETAIL

NO SCALE

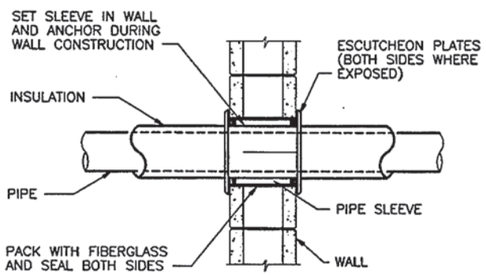

TYPICAL PIPE SLEEVE THRU INTERIOR WALL

NO SCALE

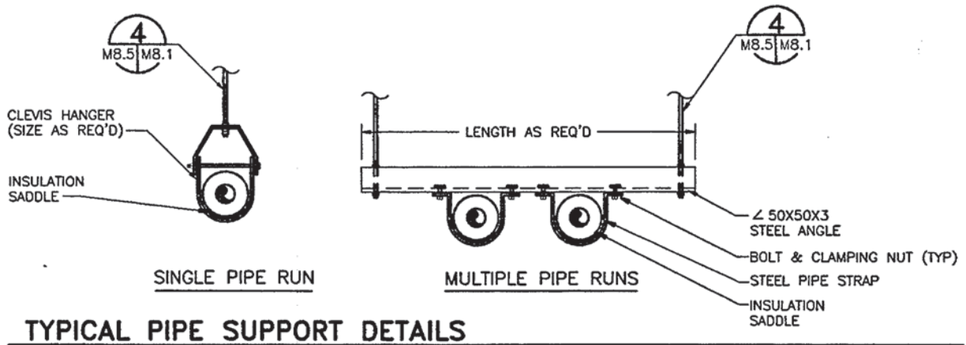

TYPICAL PIPE SUPPORT DETAILS

NO SCALE

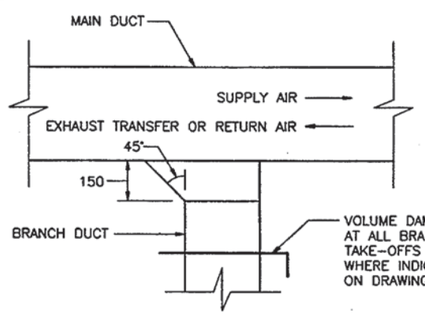

TYPICAL BRANCH CONNECTION DETAIL (LOW PRESSURE)

NO SCALE

REVISIONS

NO.	DESCRIPTION	DATE	APPROVED

CLARK • NEXSEN
Architecture & Engineering
6160 Kempsville Circle, Suite 200A
Norfolk, Virginia 23502
757/455-5800
Fax 757/455-5638
http://www.clarknexsen.com

COMMONWEALTH OF VIRGINIA — No. 14090 — PROFESSIONAL ENGINEER

APPROVED
ACTMTY – SATISFACTORY TO
DATE
APPROVED
FOR ESD FOR COMMANDER NAVFAC
DATE 4/18/99

FMD	DESIGN	
LEW3	DRAWN	
JWA	REVIEW	ETC
DRH	QC	
CEC	CHIEF ARCH./ ENGR.	
	PROJECT MANAGER	
	FIRE PROTECTION	
	BRANCH MANAGER	
	DESIGN DIRECTOR	

NAVAL FACILITIES ENGINEERING COMMAND
DEPARTMENT OF THE NAVY
ATLANTIC DIVISION
NAVAL STATION
NORFOLK, VIRGINIA
FLEET TRAINING CENTER
NORFOLK, VIRGINIA
ENGINEERING TRAINING FACILITY ADDITION
DETAILS

CODE ID. NO. 80091 | SIZE D
SCALE: AS SHOWN
ESD NO. 495083
STA. PROJ. NO. P-179
SPEC. NO. 05-97-7065
CONSTR. CONTR. NO. N62470-97-B-7065
NAVFAC DRAWING NO. 4395083
SHEET 139 OF 174

M8.5

8 | 7 | 6 | 5 | 4 | 3 | 2 | 1

D C B A

Q-80 Record Drawings

MECHANICAL LEGEND

DCW	DOMESTIC COLD WATER 15400.IA
DHW	DOMESTIC HOT WATER 15400.IA
DHWR	DOMESTIC HOT WATER RECIRCULATION 15400.IA
HWS	HOT WATER SUPPLY 15700.EAC
HWR	HOT WATER RETURN 15700.EAC
	2–WAY CONTROL VALVE 15910.JB
	3–WAY CONTROL VALVE 15910.JC
	GATE VALVE
	GLOBE VALVE
OR	FLOW CONTROL BALANCING VALVE WITH FLOW TAPS 15700.EP
	PRESSURE REDUCING VALVE (PRV)
	CHECK VALVE
	STRAINER
	UNION
	RELIEF VALVE
	PRESSURE GAGE 15700.FC
T OR T	THERMOMETER 15700.FD
	MANUAL AIR VENT (MAV)
	ECCENTRIC PIPE REDUCER
	PIPE CAP
	VALVE IN RISER
	DIRECTION OF DOWNWARD PIPE SLOPE
	FLEXIBLE PIPE CONNECTION
	DIRECTION OF FLOW
	PIPE ANCHOR SEE DETAIL E SHEET M5.4 15700.FF
	THERMOMETER WELL
	PRESSURE GAGE TAP W/CAP AND PET COCK
	FLEXIBLE DUCT CONNECTION
	MANUAL VOLUME DAMPER (MVD) W/ LOCKING QUADRANT
FD	FIRE DAMPER
M	MOTORIZED DAMPER
	REMOVE EXISTING
	SUPPLY DIFFUSER, GRILLE, OR DUCT CROSS SECTION
	RETURN REGISTER, EXHAUST REGISTER, OR DUCT CROSS SECTION
101	ROOM NUMBER
	DOOR LOUVER
	CONNECT NEW TO EXISTING
	POINT OF DISCONNECT
4 / M0.1 M9.2	PHOTOGRAPH 4 TAKEN IN DIRECTION OF ARROW, SHOWN ON M9.2
1 / M0.1 M4.1	SECTION 1 TAKEN IN DIRECTION OF ARROW, SHOWN ON M4.1

AD	ACCESS DOOR
AS	AIR SEPARATOR
AFF	ABOVE FINISHED FLOOR
BFP	BACKFLOW PREVENTER
BDD	BACKDRAFT DAMPER
CAP	CEILING ACCESS PANEL
CFT	CHEMICAL FEED TANK
CSPT	CONTROL STATIC PRESSURE TRANSMITTER
CV	CONSTANT VOLUME
°CDB	DEGREES CENTIGRADE DRY BULB
°CWB	DEGREES CENTIGRADE WET BULB
ET	EXPANSION TANK
ESP	EXTERNAL STATIC PRESSURE
EF	EXHAUST FAN
EAT	ENTERING AIR TEMPERATURE
EWT	ENTERING WATER TEMPERATURE
ER	EXHAUST REGISTER
FA	FREE AREA
GFCI	GOVERNMENT FURNISHED CONTRACTOR INSTALLED
HP	HORSE POWER
HWS	HOT WATER SUPPLY
HWR	HOT WATER RETURN
HPS	HIGH PRESSURE STEAM
LAT	LEAVING AIR TEMPERATURE
LWT	LEAVING WATER TEMPERATURE
LSD	LINEAR SLOT DIFFUSER
L	LOUVER
LPS	LOW PRESSURE STEAM
MVD	MANUAL VOLUME DAMPER
MOD	MODULATING
MAV	MANUAL AIR VENT
MD	MOTORIZED DAMPER
NOM	NOMINAL
OA	OUTSIDE AIR
PLCS	PLACES
PHWS	POOL HOT WATER SUPPLY
PHWR	POOL HOT WATER RETURN
PRTU	PACKAGED ROOF TOP UNIT
PHPU	POOL HEAT PUMP UNIT
RA	RETURN AIR
RR	RETURN REGISTER
RH	RELATIVE HUMIDITY
SA	SUPPLY AIR
SW	SWITCH
SD	SUPPLY DIFFUSER
SR	SUPPLY REGISTER
SP	STATIC PRESSURE
SVAV	SERIES VARIABLE AIR VOLUME
TYP	TYPICAL
TG	TRANSFER GRILLE
T	THERMOSTAT
T	TEMPERATURE SENSOR
UH	UNIT HEATER
VD	VOLUME DAMPER
W	WATTS
WG	WATER GAGE
WPD	WATER PRESSURE DROP
XF	TRANSFER FAN
∅	DIAMETER
⌀	FLAT OVAL

GENERAL MECHANICAL NOTES

1 ALL SUPPLY AIR DUCT, RETURN AIR DUCT, AND EXHAUST AIR DUCT ABOVE CEILINGS SHALL BE INSULATED.

2 ALL FLOW CONTROL BALANCING VALVES, THERMOMETER WELLS, STRAINERS, SENSING DEVICES AND MANUAL AIR VENTS SHALL BE PROVIDED WITH REMOVABLE INSULATION CAPS.

3 MANUAL AIR VENTS SHALL BE PROVIDED AT ALL PIPING HIGH POINTS, AT ALL HIGH POINTS OF AIR–ENTRAPPING PIPE LOOPS, AND WHERE INDICATED. PROVIDE DRAINS AT ALL LOW POINTS AND WHERE INDICATED.

4 FOR INSTALLATION OF PIPES AND DUCTS THROUGH WALLS, SEE DETAILS SHEET M5.3.

5 FOR INSTALLATION OF PIPES AND DUCTS THROUGH FIRE–RATED WALLS, SEE DETAILS, SHEETS M5.2 AND M5.3.

6 MINIMUM ACCESS PANEL SIZE SHALL BE 300 X 300 UNLESS INDICATED OTHERWISE.

7 ALL DUCTWORK OPEN TO CEILING AREA SHALL HAVE 50 FLANGED ENDS WITH OPENINGS COVERED WITH 15 WELDED WIRE MESH.

8 ALL DIMENSIONS ARE SHOWN IN MILLIMETERS UNLESS NOTED.

KEYNOTES

DIV 15 MECHANICAL

15400.IA	DOMESTIC WATER PIPING, SOLDERED JOINT COPPER
15700.EAC	COPPER TUBING PIPING SYSTEM, HOT WATER
15700.EP	FLOW CONTROL BALANCING VALVES
15700.FC	PRESSURE GAGES
15700.FD	THERMOMETERS
15700.FF	FLEXIBLE PIPE CONNECTORS
15910.JB	TWO–WAY VALVES
15910.JC	THREE–WAY VALVES

DUCT CONSTRUCTION AND LEAK TEST SCHEDULE

MARK	DUCT PRESSURE CLASS SUPPLY DUCT Pa	RETURN DUCT Pa	EXHAUST DUCT Pa	DUCT SEAL CLASS	DUCT LEAK CLASS	DUCT TEST PRESSURE	DUCT TEST TYPE
PRTU–1	1000	750	–	A	3	①	②
PRTU–2	1000	750	–	A	3	①	②
PRTU–3	1000	750	–	A	3	①	②
PRTU–4	750	500	–	C	12	①	②
PRTU–5	500	500	–	C	12	①	②
PHPU–1	750	500	–	C	12	①	②
SVAV–1 THRU SVAV–31	500	500	–	C	12	①	②
EF–5, EF–6 EF–7, XF–9 XF–16	–	–	250	C	12	①	②

① DUCT TEST PRESSURE SHALL BE 90% OF DUCT PRESSURE CLASS.
② TEST IN ACCORDANCE WITH SPEC SECTION 15950, HVAC TESTING, ADJUSTING, AND BALANCING

DESIGN CONDITION SCHEDULE

ROOM	INDOOR SUMMER °CDB	INDOOR SUMMER %RH	INDOOR WINTER °CDB	OUTDOOR SUMMER °CDB	OUTDOOR SUMMER °CWB	OUTDOOR WINTER ° CDB
SWIMMING POOL ①	30	55	30/55%RH	32.2	26.1	–5
GYM, RACKET BALL	24.4	50	21.1			
FITNESS, EXERCISE	24.4	50	21.1			
ADMIN, COMPUTER, TV	24.4	50	21.1			
LOCKER	24.4	50	21.1			
TELEPHONE	24.4	50	21.1			
MECHANICAL	VENTILATION		12.8			
ELECTRICAL	VENTILATION		12.8			

① POOL WATER HEATED TO 27.8°C YEAR AROUND

REVISIONS

DESCRIPTION	DATE	APPROVED

DESIGNED & ENGINEERED BY: LANTDIV NAVAL FACILITIES ENGINEERING COMMAND

SEAL

APPROVED
ACTIVITY – SATISFACTORY TO
DATE
APPROVED
FOR EFD FOR COMMANDER NAVFAC
DATE

A/E	EFD
DESIGN	JTI
DRAWN	JTI
REVIEW	BDC
QC	
CHIEF ARCH./ ENGR.	
PROJECT MANAGER	DWB
FIRE PROTECTION	
BRANCH MANAGER	
DESIGN DIRECTOR	

NAVAL FACILITIES ENGINEERING COMMAND
DEPARTMENT OF THE NAVY
ATLANTIC DIVISION
NAVAL STATION NORFOLK, VIRGINIA
NAVAL STATION NORFOLK, VIRGINIA
WATERFRONT ATHLETIC COMPLEX
LEGEND,SCHEDULES, AND NOTES

CODE ID. NO. 80091	SIZE D
SCALE: NONE	
EFD NO. 509069	
STA. PROJ. NO. P–015	
SPEC. NO. 05–00–8090	
CONSTR. CONTR. NO. N62470–B–00–8090	
NAVFAC DRAWING NO. 4409069	
SHEET 200 OF 284	

M0.1

FILENAME: 80090M01.DWG, PLOT SCALE: 1" = 1', SAVED ON 10/01/99 AT 07:39, XREFS: NONE

DRAWFORM REVISION 27 JULY 98

8 7 6 5 4 3 2 1

D C B A

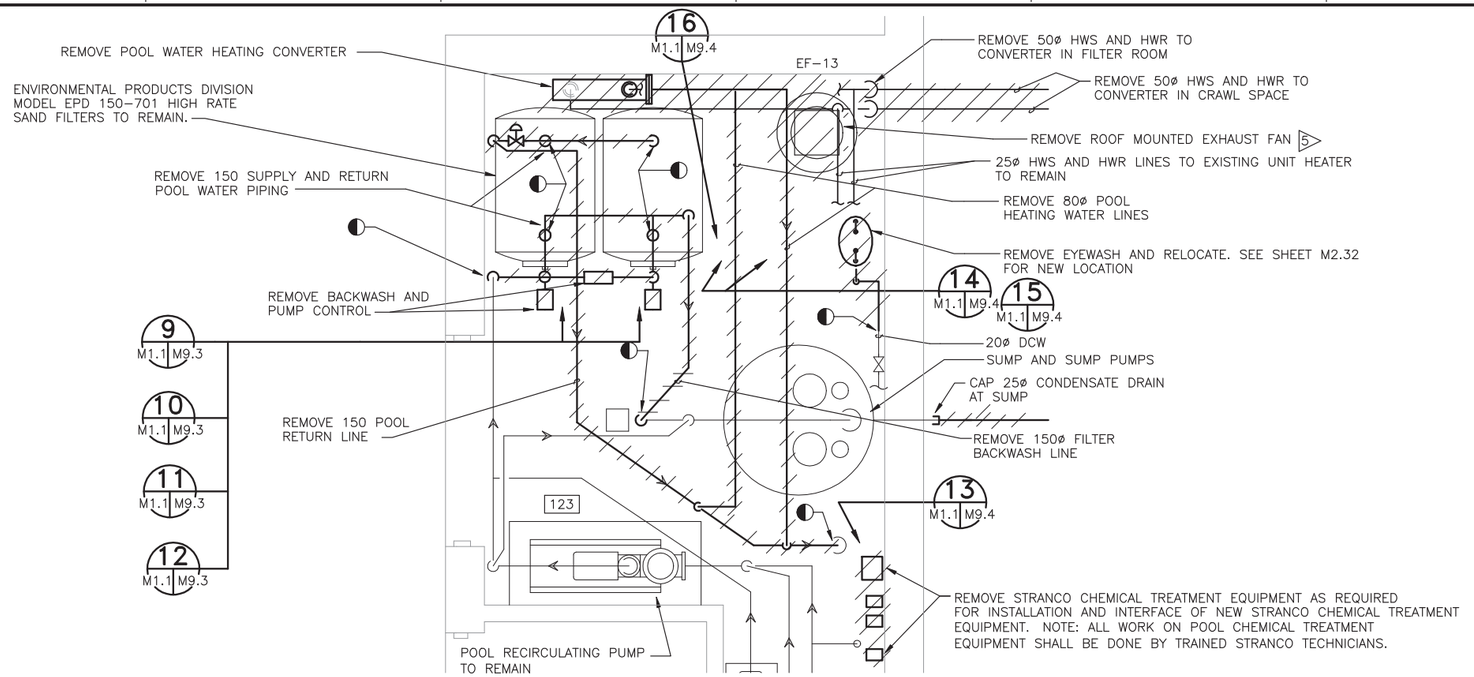

ENLARGED PARTIAL FILTER ROOM PLAN-DEMOLITION

SCALE: 1 = 25

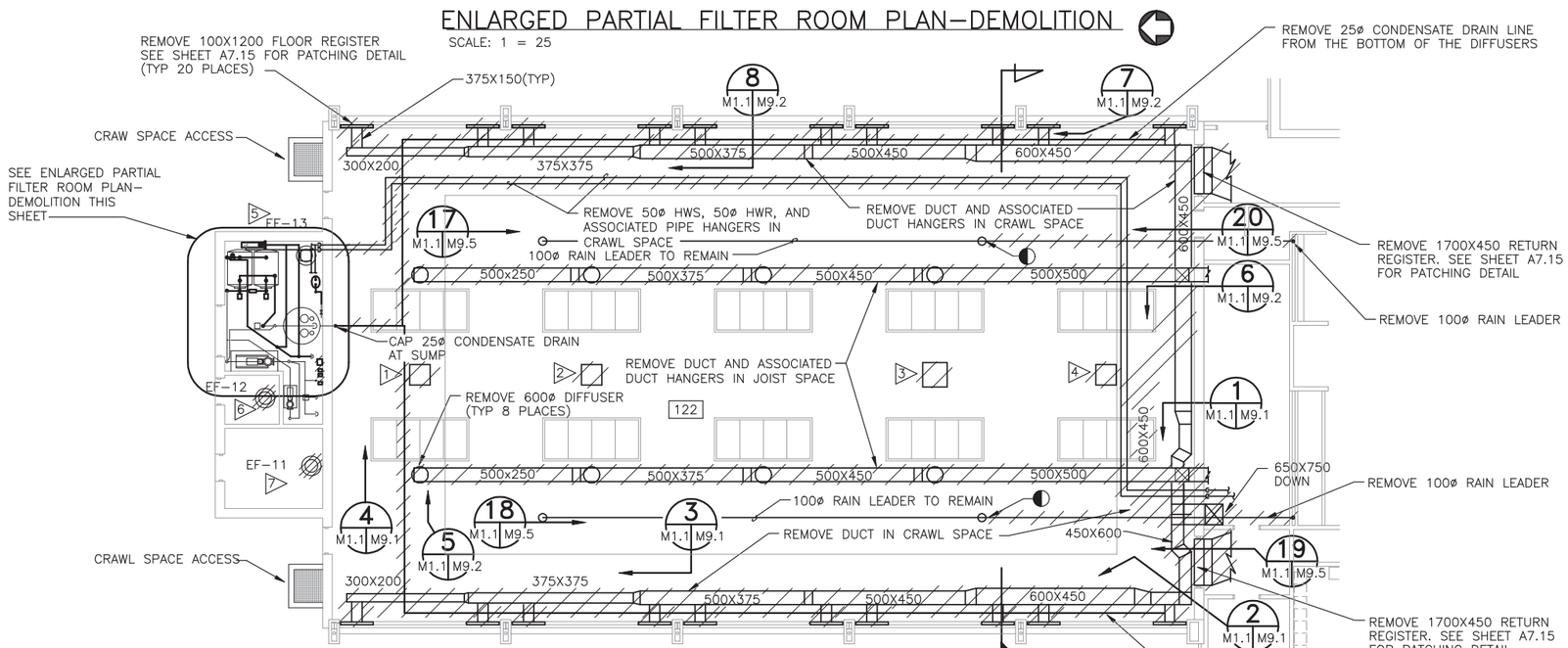

POOL FLOOR PLAN-DEMOLITION

SCALE: 1 = 100

1 M1.1 M1.2

REMOVE 25ø CONDENSATE DRAIN LINE FROM THE BOTTOM OF THE DIFFUSERS

DEMOLITION NOTES

1. REMOVE 373 WATT, 2366 L/s, ROOF MOUNTED EXHAUST FAN. APPROXIMATE ROOF OPENING 750X750
2. REMOVE 373 WATT, 1605 L/s, ROOF MOUNTED EXHAUST FAN. APPROXIMATE ROOF OPENING 750X750
3. REMOVE ROOF MOUNTED RELIEF AIR UNIT. APPROXIMATE ROOF OPENING 1050X1050
4. REMOVE 373 WATT, 2366 L/s, ROOF MOUNTED EXHAUST FAN. APPROXIMATE ROOF OPENING 750X750
5. REMOVE 187 WATT, 708L/s, ROOF MOUNTED EXHAUST FAN. APPROXIMATE ROOF OPENING 400X400
6. REMOVE 37 WATT, 106 L/s, ROOF MOUNTED EXHAUST FAN. APPROXIMATE ROOF OPENING 300X300
7. REMOVE 93 WATT, 142 L/s, ROOF MOUNTED EXHAUST FAN. APPROXIMATE ROOF OPENING 300X300

KEYPLAN

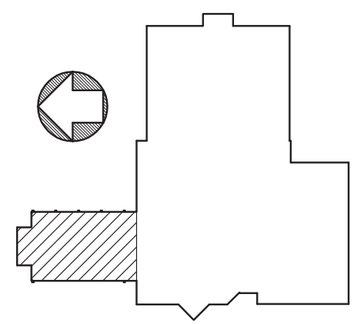

GRAPHIC SCALE

1:25 0 500 1500 2500mm

1:100 0 1 5 10m

REVISIONS

STM	DESCRIPTION	DATE	APPROVED

DESIGNED & ENGINEERED BY: LANTDIV Naval Facilities Engineering Command

SEAL

APPROVED

ACTIVITY - SATISFACTORY TO

DATE

APPROVED

FOR EFD FOR COMMANDER NAVFAC

DATE

A/E	EFD
DESIGN	JTI
DRAWN	JTI
REVIEW	BDC
QC	
CHIEF ARCH./ ENGR.	
PROJECT MANAGER	DWB
FIRE PROTECTION	
BRANCH MANAGER	
DESIGN DIRECTOR	

DEPARTMENT OF THE NAVY
NAVAL STATION NORFOLK, VIRGINIA
ATLANTIC DIVISION
NAVAL FACILITIES ENGINEERING COMMAND
NORFOLK, VIRGINIA

WATERFRONT ATHLETIC COMPLEX

MECHANICAL POOL DEMOLITION

CODE ID. NO. 80091	SIZE D
SCALE:	AS NOTED
EFD NO.	509070
STA. PROJ. NO.	P-015
SPEC. NO.	05-00-8090
CONSTR. CONTR. NO.	N62470-00-B-8090
NAVFAC DRAWING NO.	4409070
SHEET	201 OF 284

M1.1

DRAWFORM REVISION 27 JULY 98

FILENAME: 8090M101.DWG, PLOT SCALE: 1=1, SAVED ON 10/01/99 AT 07:41, XREFS: U:\PROJECTS\ACTIVE\8090 WATERFRONT ATHLETIC\DRAWINGS\401\8090AX01.DWG

8 7 6 5 4 3 2 1

D C B A

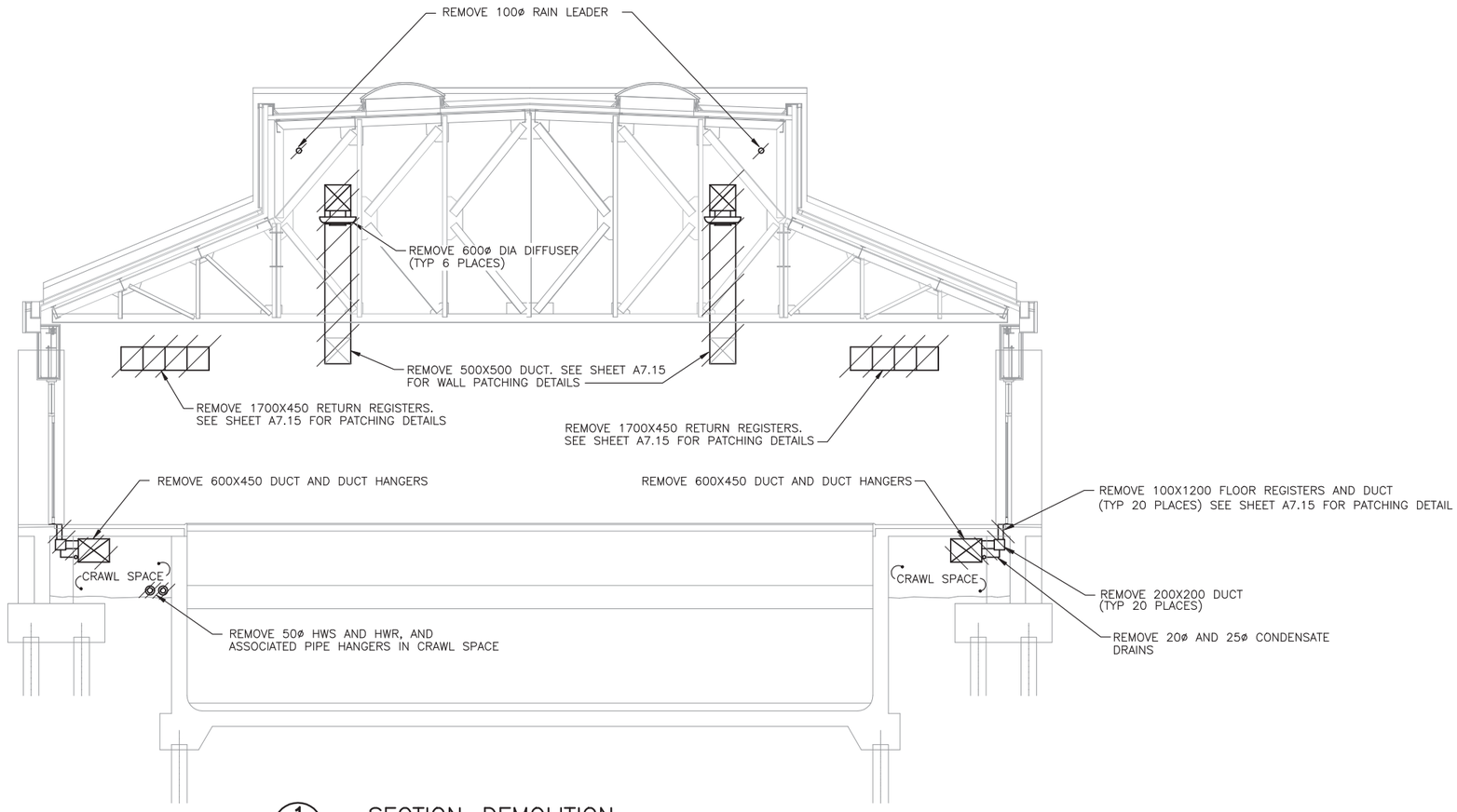

1 / M1.1 M1.2 SECTION–DEMOLITION

SCALE 1 = 50

GRAPHIC SCALE

1:50 0 1000 3000 5000mm

REVISIONS

NO.	DESCRIPTION	DATE	APPROVED

DESIGNED & ENGINEERED BY: LANTDIV NAVAL FACILITIES ENGINEERING COMMAND

SEAL

APPROVED

ACTIVITY – SATISFACTORY TO

DATE

APPROVED

FOR EFD FOR COMMANDER NAVFAC

DATE

A/E	EFD
DESIGN	JTI
DRAWN	JTI
REVIEW	BDC
QC	
CHIEF	ARCH./ ENGR.
PROJECT MANAGER	DWB
FIRE PROTECTION	
BRANCH MANAGER	
DESIGN DIRECTOR	

DEPARTMENT OF THE NAVY
NAVAL STATION
ATLANTIC DIVISION
NAVAL FACILITIES ENGINEERING COMMAND
NAVAL STATION NORFOLK, VIRGINIA

WATERFRONT ATHLETIC COMPLEX

NORFOLK, VIRGINIA

SECTION–DEMOLITION

CODE ID. NO. 80091	SIZE D
SCALE: AS NOTED	
EFD NO. 509071	
STA. PROJ. NO. P–015	
SPEC. NO. 05–00–8090	
CONSTR. CONTR. NO. N62470–B–00–8090	
NAVFAC DRAWING NO. 4409071	
SHEET 202 OF 284	

M1.2

DRAWFORM REVISION 27 JULY 98

FILENAME: 8090M102.DWG, PLOT SCALE: 1" = 50', SAVED ON 10/01/99 AT 09:50, XREFS: NONE

8 7 6 5 4 3 2 1

D C B A

NOTES THIS SHEET

1. SEE 1ST FLOOR ENLARGED PLANS SHEETS M2.11, M2.12, M2.13, AND M2.14 FOR DETAILED INFORMATION

2. BALANCING DAMPERS ABOVE GYPSUM CEILING SHALL REMAIN ACCESSIBLE UNTIL SYSTEMS ARE TESTED, BALANCED, AND CERTIFIED.

SEE ENLARGED PLAN SHEET M2.13

SEE ENLARGED PLAN SHEET M2.12

UP TO EF-4

UP TO PRTU-2

SEE PARTIAL FLOOR PLAN-CLOTHES DRYERS SHEET M3.2

SEE SHEET M2.4 FOR RACQUET BALL HVAC

SEE ENLARGED PLAN SHEET M2.11

SEE ENLARGED PLAN SHEET M2.14

SEE ENLARGED MECHANICAL ROOM PLAN ON SHEET M3.1

PIPE ANCHOR(TYP)

1ST FLOOR PLAN

SCALE: 1 = 100

KEYPLAN

GRAPHIC SCALE

1:100 01000 5000 10000mm

REVISIONS

STM	DESCRIPTION	DATE	APPROVED

DESIGNED & ENGINEERED BY: LANTDIV NAVAL FACILITIES ENGINEERING COMMAND

APPROVED

ACTIVITY - SATISFACTORY TO

DATE

APPROVED

FOR EFD FOR COMMANDER NAVFAC

DATE

A/E	EFD
DESIGN	JI/TH
DRAWN	JTI
REVIEW	BDC
QC	
CHIEF	ARCH./ ENGR.
PROJECT MANAGER	DWB
FIRE PROTECTION	
BRANCH MANAGER	
DESIGN DIRECTOR	

NAVAL FACILITIES ENGINEERING COMMAND
ATLANTIC DIVISION
NORFOLK, VIRGINIA
DEPARTMENT OF THE NAVY
NAVAL STATION
NORFOLK, VIRGINIA

WATERFRONT ATHLETIC COMPLEX

1ST FLOOR PLAN

CODE ID. NO. 80091	SIZE D
SCALE:	AS NOTED
EFD NO.	509272
STA. PROJ. NO.	P-015
SPEC. NO.	05-00-8090
CONSTR. CONTR. NO.	N62470-B-00-8090
NAVFAC DRAWING NO.	4409072
SHEET	203 OF 284

M2.1

DRAWFORM REVISION 27 JULY 98

FILENAME: 8090M201.DWG, PLOT SCALE: 1=1, SAVED ON 10/06/99 AT 14:35, XREFS: U:\PROJECTS\ACTIVE\8090 WATERFRONT ATHLETIC\DRAWINGS\401\8090AX02.DWG, U:\PROJECTS\ACTIVE\8090 WATERFRONT ATHLETIC\DRAWINGS\403\8090MX01.DWG, U:\PROJECTS\ACTIVE\8090 WATERFRONT ATHLETIC\DRAWINGS\403\8090M201.DWG,

KEYNOTES

DIV 15 MECHANICAL

15080.AA	INSULATION, PIPING
15080.AB	INSULATION, DUCT
15400.I	DOMESTIC WATER PIPING
15700.AM	SERIES FAN POWERED VARIABLE VOLUME (VAV) TERMINALS
15700.AR	CONVECTORS
15700.CA	CENTRIFUGAL FANS
15700.CG	CEILING TYPE FANS
15700.DA	DUCTS OF PRESSURE CLASSES 746 TO 2490 Pa (GAGE) 3 TO 10 WG
15700.DB	DUCTS OF PRESSURE CLASSES LESS THAN 746 Pa (GAGE) 3 INCH WG
15700.DBE	DUCTS OF PRESSURE CLASSES LESS THAN 746 Pa (GAGE) 3 INCH WG, DAMPERS
15700.DC	DIFFUSERS, REGISTERS AND GRILLES
15700.EAC	COPPER TUBING PIPING SYSTEM, HOT WATER
15700.ZX	CABINET FAN
15910.H	SENSORS AND INPUT HARDWARE

KEYPLAN

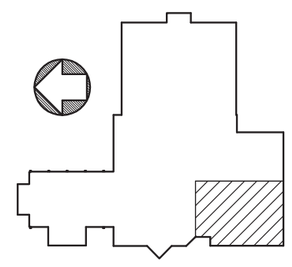

GRAPHIC SCALE

1:50 0 1000 3000 5000mm

1ST FLOOR ENLARGED PLAN

SCALE: 1 = 50

REVISIONS

NO.	DESCRIPTION	DATE	APPROVED

DESIGNED & ENGINEERED BY: LANTDIV NAVAL FACILITIES ENGINEERING COMMAND

APPROVED

ACTIVITY – SATISFACTORY TO

DATE

APPROVED

FOR EFD FOR COMMANDER NAVFAC

DATE

A/E	EFD
DESIGN	JTI
DRAWN	JTI
REVIEW	BDC
QC	
CHIEF ARCH./ ENGR.	
PROJECT MANAGER	DWB
FIRE PROTECTION	
BRANCH MANAGER	
DESIGN DIRECTOR	

DEPARTMENT OF THE NAVY
NAVAL STATION
ATLANTIC DIVISION
NAVAL FACILITIES ENGINEERING COMMAND
NORFOLK, VIRGINIA

WATERFRONT ATHLETIC COMPLEX

1ST FLOOR ENLARGED PLAN

NAVAL STATION NORFOLK, VIRGINIA

CODE ID. NO. 80091	SIZE D
SCALE:	AS NOTED
EFD NO.	509073
STA. PROJ. NO.	P-015
SPEC. NO.	05-00-8090
CONSTR. CONTR. NO.	N62470-B-00-8090
NAVFAC DRAWING NO.	4409073
SHEET	204 OF 284

M2.11

DRAWFORM REVISION 27 JULY 98

FILENAME: 8090M2011.DWG, PLOT SCALE: 1=1, SAVED ON 10/01/99 AT 11:31, XREFS: U:\PROJECTS\ACTIVE\8090 WATERFRONT ATHLETIC\DRAWINGS\403\8090MX01.DWG, U:\PROJECTS\ACTIVE\8090 WATERFRONT ATHLETIC\DRAWINGS\402\8090SMOD.DWG,

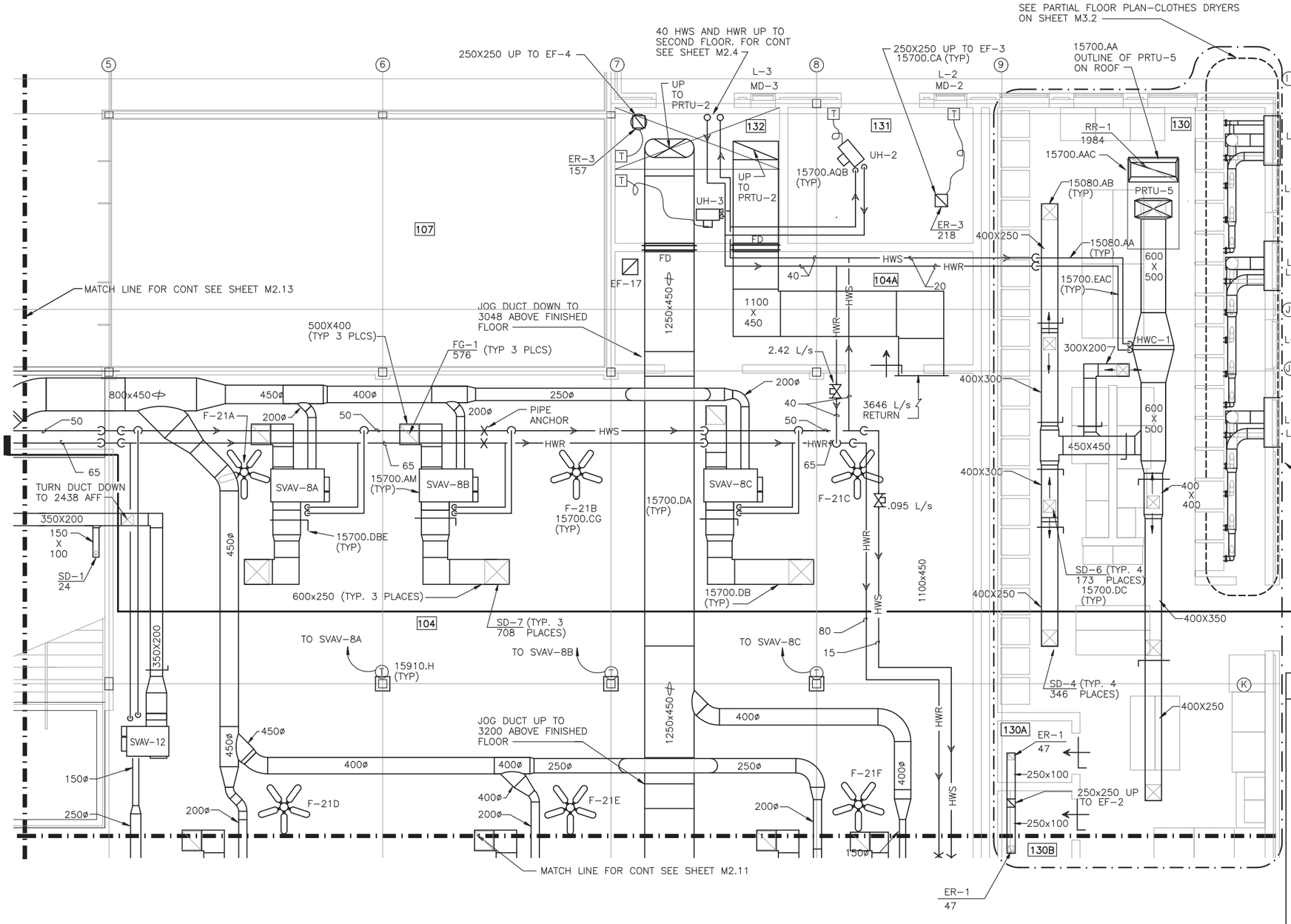

1ST FLOOR ENLARGED PLAN

SCALE: 1 = 50

KEYPLAN

DIV 15 MECHANICAL

15080.AA	INSULATION, PIPING
15080.AB	INSULATION, DUCT
15700.AA	PACKAGED ROOF TOP AIR-CONDITIONERS
15700.AAC	PACKAGED AIR-CONDITIONERS, ROOF CURB
15700.AM	SERIES FAN POWERED VARIABLE VOLUME (SVAV) TERMINALS
15700.AQB	UNIT HEATERS, HOT WATER
15700.CA	CENTRIFUGAL FANS-ROOF MOUNTED
15700.CG	CEILING TYPE FANS
15700.DA	DUCTS OF PRESSURE CLASSES 746 TO 2490 Pa (GAGE) 3 TO 10 WG
15700.DB	DUCTS OF PRESSURE CLASS LESS THAN 746 Pa (GAGE) 3 INCHES WG
15700.DBE	DUCTS OF PRESSURE CLASS LESS THAN 746 Pa (GAGE) 3 INCHES WG, DAMPERS
15700.DC	DIFFUSERS, REGISTERS AND GRILLES
15700.EAC	COPPER TUBING PIPING SYSTEM, HOT WATER
15910.H	SENSORS AND INPUT HARDWARE

KEYPLAN

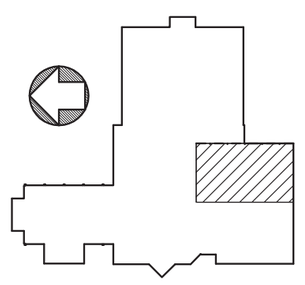

GRAPHIC SCALE

1:50 0 1000 3000 5000mm

REVISIONS

NO.	DESCRIPTION	DATE	APPROVED

DESIGNED & ENGINEERED BY: LANTDIV Naval Facilities Engineering Command

APPROVED
ACTIVITY - SATISFACTORY TO
DATE
APPROVED
FOR EFD FOR COMMANDER NAVFAC
DATE

A/E	EFD
DESIGN	JTI
DRAWN	JTI
REVIEW	BDC
QC	
CHIEF ARCH./ ENGR.	
PROJECT MANAGER	DWB
FIRE PROTECTION	
BRANCH MANAGER	
DESIGN DIRECTOR	

DEPARTMENT OF THE NAVY
NAVAL STATION
NAVAL FACILITIES ENGINEERING COMMAND
ATLANTIC DIVISION
NORFOLK, VIRGINIA
NAVAL STATION
NORFOLK, VIRGINIA

WATERFRONT ATHLETIC COMPLEX

1ST FLOOR ENLARGED PLAN

CODE ID. NO. 80091 | SIZE D
SCALE: AS NOTED
EFD NO. 509074
STA. PROJ. NO. P-015
SPEC. NO. 05-00-8090
CONSTR. CONTR. NO. N62470-B-00-8090
NAVFAC DRAWING NO. 4409074
SHEET 205 OF 284
M2.12

DRAWFORM REVISION 27 JULY 98

FILENAME: 8090M2012.DWG, PLOT SCALE: 1=1, SAVED ON 10/07/99 AT 08:50, XREFS: U:\PROJECTS\ACTIVE\8090 WATERFRONT ATHLETIC\DRAWINGS\403\8090MX01.DWG, U:\PROJECTS\ACTIVE\8090 WATERFRONT ATHLETIC\DRAWINGS\401\8090AX02.DWG, U:\PROJECTS\ACTI

KEYNOTES

DIV 15 MECHANICAL

15080.AA	INSULATION, PIPING
15080.AB	INSULATION, DUCT
15700.AM	SERIES FAN POWERED VARIABLE VOLUME (VAV) TERMINALS
15700.AR	CONVECTORS
15700.DA	DUCTS OF PRESSURE CLASSES 746 TO 2490 Pa (GAGE) 3 TO 10 WG
15700.DB	DUCTS OF PRESSURE CLASSES LESS THAN 746 Pa (GAGE) 3 INCH WG
15700.DBE	DUCTS OF PRESSURE CLASSES LESS THAN 746 Pa (GAGE) 3 INCH WG, DAMPERS
15700.DC	DIFFUSERS, REGISTERS AND GRILLES
15700.EAC	COPPER TUBING PIPING SYSTEM, HOT WATER
15700.ZX	CABINET FAN
15700.ZY	CONSTANT VOLUME UNIT
15910.H	SENSORS AND INPUT HARDWARE

KEYPLAN

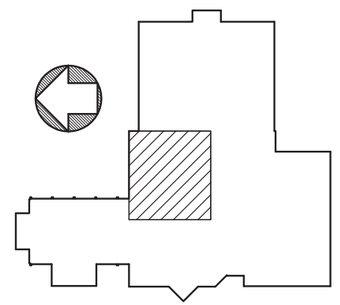

GRAPHIC SCALE

1:50 0 1000 3000 5000mm

MATCH LINE FOR CONT SEE SHEET M2.14

MATCH LINE FOR CONT SEE SHEET M2.12

1ST FLOOR ENLARGED PLAN

SCALE: 1 = 50

REVISIONS

DESCRIPTION	DATE	APPROVED

DESIGNED & ENGINEERED BY: LANTDIV NAVAL FACILITIES ENGINEERING COMMAND

APPROVED

ACTIVITY – SATISFACTORY TO

DATE

APPROVED

FOR EFD FOR COMMANDER NAVFAC

DATE

A/E	EFD
DESIGN	JTI
DRAWN	JTI
REVIEW	BDC
QC	
CHIEF ARCH./ ENGR.	DWB
PROJECT MANAGER	
FIRE PROTECTION	
BRANCH MANAGER	
DESIGN DIRECTOR	

DEPARTMENT OF THE NAVY
NAVAL STATION
ATLANTIC DIVISION
NAVAL FACILITIES ENGINEERING COMMAND
NORFOLK, VIRGINIA

WATERFRONT ATHLETIC COMPLEX

NAVAL STATION NORFOLK, VIRGINIA

1ST FLOOR ENLARGED PLAN

SEAL

CODE ID. NO. 80091	SIZE D
SCALE:	AS NOTED
EFD NO.	509075
STA. PROJ. NO.	P-015
SPEC. NO.	05-00-8090
CONSTR. CONTR. NO.	N62470-B-00-8090
NAVFAC DRAWING NO.	4409075
SHEET 206 OF 284	

M2.13

DRAWFORM REVISION 27 JULY 98

FILENAME: 8090M2013.DWG, PLOT SCALE: 1=1, SAVED ON 10/07/99 AT 08:34, XREFS: U:\PROJECTS\ACTIVE\8090 WATERFRONT ATHLETIC\DRAWINGS\403\8090MX01.DWG, U:\PROJECTS\ACTIVE\8090 WATERFRONT ATHLETIC\DRAWINGS\401\8090AX02.DWG, U:\PROJECTS\ACTI

KEYNOTES

DIV 15 MECHANICAL

15080.AA	INSULATION, PIPING
15080.AB	INSULATION, DUCT
15700.AM	SERIES FAN POWERED VARIABLE VOLUME (SVAV) TERMINALS
15700.CC	IN-LINE CENTRIFUGAL FANS
15700.DA	DUCTS OF PRESSURE CLASSES 746 TO 2490 Pa (GAGE) 3 TO 10 WG
15700.DB	DUCTS OF PRESSURE CLASSES LESS THAN 746 Pa (GAGE) 3 INCH WG
15700.DBE	DUCTS OF PRESSURE CLASSES LESS THAN 746 Pa (GAGE) 3 INCH WG, DAMPERS
15700.DC	DIFFUSERS, REGISTERS AND GRILLES
15700.EAC	COPPER TUBING PIPING SYSTEM, HOT WATER
15700.ZX	CABINET FAN
15700.ZY	CONSTANT VOLUME UNIT
15910.H	SENSORS AND INPUT HARDWARE

1ST FLOOR ENLARGED PLAN

SCALE: 1 = 50

KEYPLAN

GRAPHIC SCALE

1:50 0 1000 3000 5000mm

REVISIONS

NO.	DESCRIPTION	DATE	APPROVED

DESIGNED & ENGINEERED BY: LANTDIV NAVAL FACILITIES ENGINEERING COMMAND

APPROVED

ACTIVITY - SATISFACTORY TO

DATE

APPROVED

FOR EFD FOR COMMANDER NAVFAC

DATE

A/E	EFD
DESIGN	JTI
DRAWN	JTI
REVIEW	BDC
QC	
CHIEF ARCH./ ENGR.	
PROJECT MANAGER	DWB
FIRE PROTECTION	
BRANCH MANAGER	
DESIGN DIRECTOR	

DEPARTMENT OF THE NAVY
NAVAL STATION
NAVAL FACILITIES ENGINEERING COMMAND
ATLANTIC DIVISION
NORFOLK, VIRGINIA
NAVAL STATION
NORFOLK, VIRGINIA

WATERFRONT ATHLETIC COMPLEX

1ST FLOOR ENLARGED PLAN

SEAL

CODE ID. NO. 80091	SIZE D
SCALE: AS NOTED	
EFD NO. 509076	
STA. PROJ. NO. P-015	
SPEC. NO. 05-00-8090	
CONSTR. CONTR. NO. N62470-B-00-8090	
NAVFAC DRAWING NO. 4409076	
SHEET 207 OF 284	

M2.14

DRAWFORM REVISION 27 JULY 98

FILENAME: 8090M2014.DWG, PLOT SCALE: 1=1, SAVED ON 09/09/99 AT 08:37, XREFS: U:\PROJECTS\ACTIVE\8090 WATERFRONT ATHLETIC\DRAWINGS\403\8090AX01.DWG, U:\PROJECTS\ACTIVE\8090 WATERFRONT ATHLETIC\DRAWINGS\401\8090AX02.DWG, U:\PROJECTS\ACTI

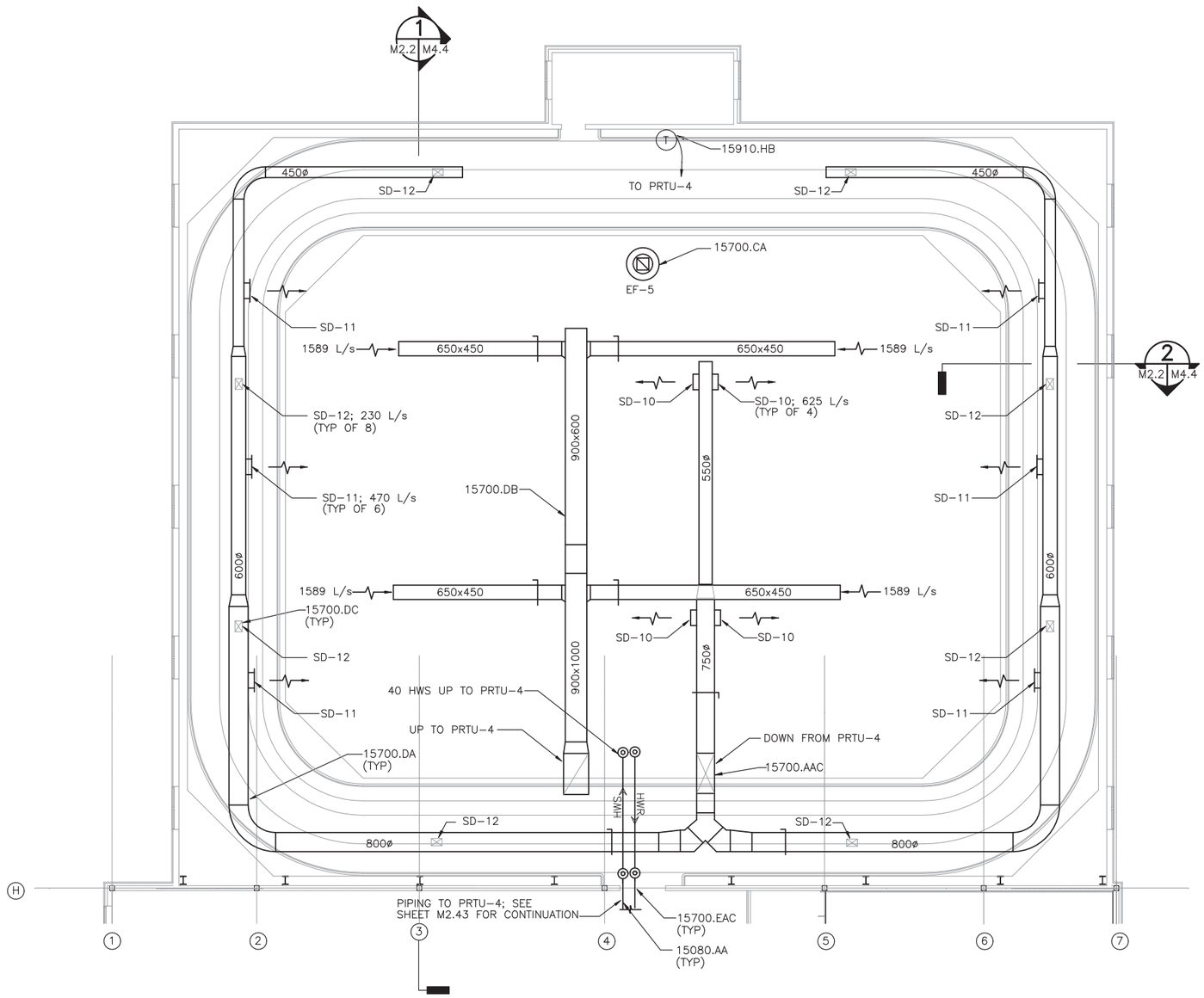

GYM DUCT PLAN
SCALE: 1 = 100

KEYNOTES

DIV 15 MECHANICAL

15080.AA	INSULATION, PIPING
15700.AAC	PACKAGED AIR-CONDITIONERS, ROOF CURB
15700.CA	CENTRIFUGAL FANS
15700.DA	DUCTS OF PRESSURE CLASSES 746 TO 2490 Pa (GAGE) 3 TO 10 WG
15700.DB	DUCTS OF PRESSURE CLASSES LESS THAN 746 Pa (GAGE) 3 INCH WG
15700.DC	DIFFUSERS, REGISTERS AND GRILLES
15700.EAC	COPPER TUBING PIPING SYSTEM, HOT WATER
15910.HB	RESISTANCE TEMPERATURE DETECTOR'S (RTD'S)

GYM KEYPLAN

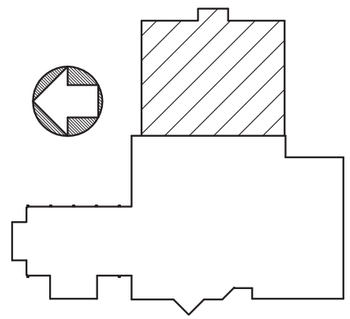

GRAPHIC SCALE

1:100 0 1000 5000 10000mm

REVISIONS

NO.	DESCRIPTION	DATE	APPROVED

DESIGNED & ENGINEERED BY: LANTDIV Naval Facilities Engineering Command

SEAL

APPROVED

ACTIVITY - SATISFACTORY TO

DATE

APPROVED

FOR EFD FOR COMMANDER NAVFAC

DATE

A/E	EFD
DESIGN	TLH
DRAWN	TLH
REVIEW	BDC
QC	
CHIEF ARCH./ ENGR.	
PROJECT MANAGER	
FIRE PROTECTION	
BRANCH MANAGER	
DESIGN DIRECTOR	

DEPARTMENT OF THE NAVY
NAVAL STATION
NAVAL FACILITIES ENGINEERING COMMAND
ATLANTIC DIVISION
NORFOLK, VIRGINIA
NAVAL STATION
NORFOLK, VA
WATERFRONT ATHLETIC COMPLEX
GYM DUCT PLAN

CODE ID. NO. 80091	SIZE D
SCALE:	AS NOTED
EFD NO.	509077
STA. PROJ. NO.	P-015
SPEC. NO.	05-00-8090
CONSTR. CONTR. NO.	N62470-B-00-9-8090
NAVFAC DRAWING NO.	4409077
SHEET	208 OF 284

M2.2

DRAWFORM REVISION 05 APRIL 99

FILENAME: 8090M202.DWG, PLOT SCALE: 1=1, SAVED ON 10/07/99 AT 11:56, XREFS: U:\PROJECTS\ACTIVE\8090 WATERFRONT ATHLETIC\DRAWINGS\403\8090MX02.DWG, U:\PROJECTS\ACTIVE\8090 WATERFRONT ATHLETIC\DRAWINGS\401\8090AX02.DWG, U:\PROJECTS\ACTIV

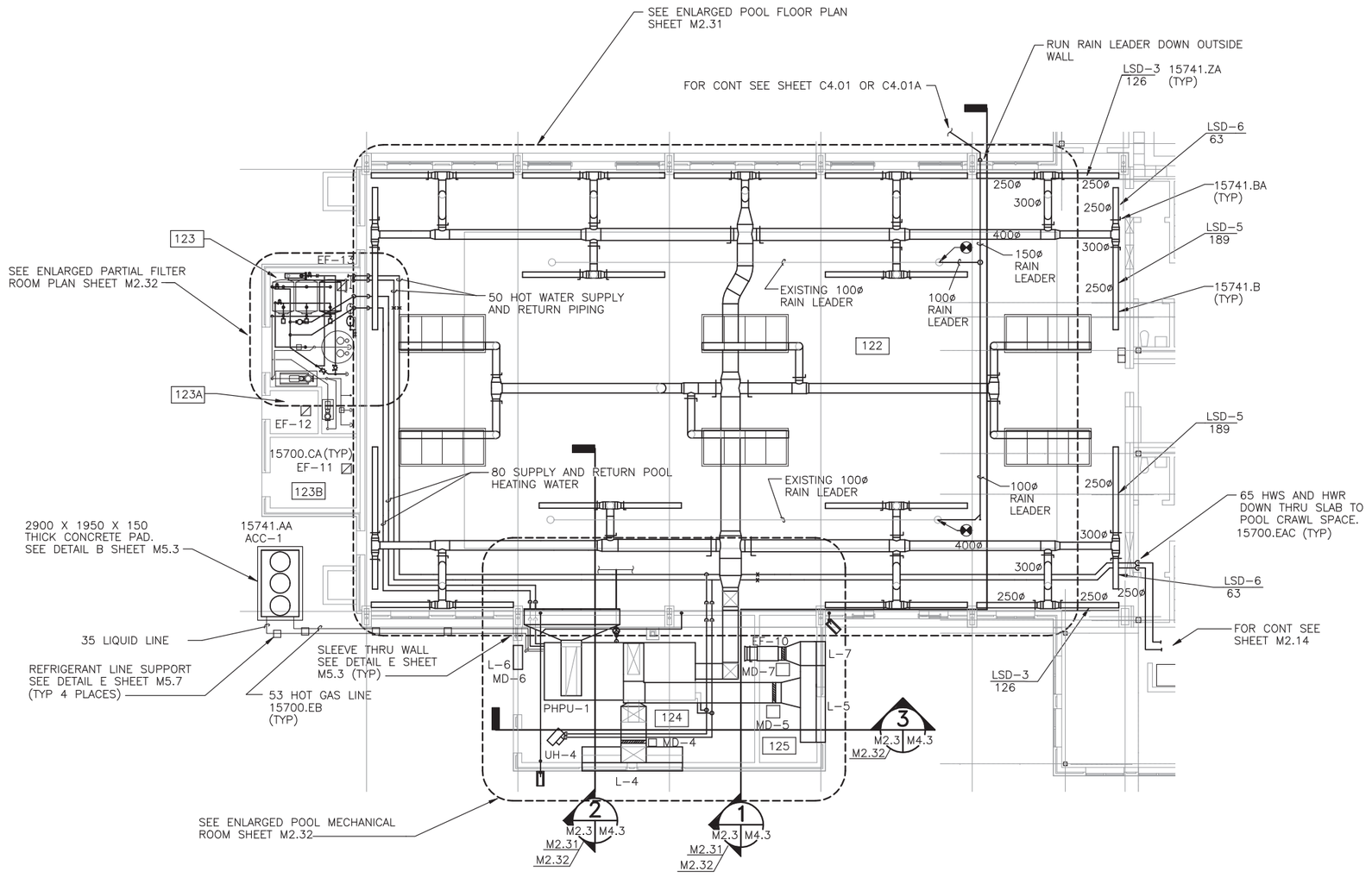

POOL FLOOR PLAN

SCALE: 1 = 100

KEYNOTES

DIV 15 MECHANICAL

15700.CA	CENTRIFUGAL FANS
15700.EAC	COPPER TUBING PIPING SYSTEM, HOT WATER
15700.EB	COPPER REFRIGERANT PIPING
15741.AA	AIR COOLED CONDENSER, SPECIAL CORROSION PROTECTION
15741.B	FRP DUCT SYSTEMS
15741.BA	DAMPER-FRP
15741.ZA	DIFFUSERS AND REGISTERS

NOTES THIS SHEET

1. ALL SUPPLY, RETURN, AND EXHAUST DUCTWORK ASSOCIATED WITH PHPU-1 SHALL BE FRP
2. ALL POOL WATER PIPING SHALL BE CPVC.
3. ALL REGISTERS AND DIFFUSERS SHALL BE ALUMINUM.

KEYPLAN

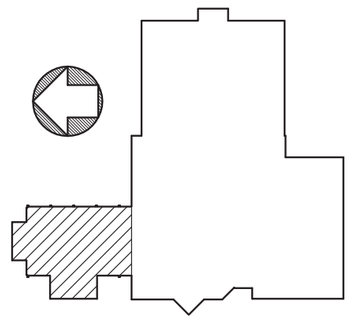

GRAPHIC SCALE

1:100 01000 5000 10000mm

REVISIONS

NO.	DESCRIPTION	DATE	APPROVED

DESIGNED & ENGINEERED BY: LANTDIV NAVAL FACILITIES ENGINEERING COMMAND

SEAL

APPROVED

ACTIVITY - SATISFACTORY TO

DATE

APPROVED

FOR EFD FOR COMMANDER NAVFAC

DATE

A/E	EFD
DESIGN	JTI
DRAWN	JTI
REVIEW	BDC
QC	
CHIEF	ARCH./ ENGR.
PROJECT MANAGER	DWB
FIRE PROTECTION	
BRANCH MANAGER	
DESIGN DIRECTOR	

DEPARTMENT OF THE NAVY
NAVAL STATION
ATLANTIC DIVISION
NAVAL FACILITIES ENGINEERING COMMAND
NORFOLK, VIRGINIA

WATERFRONT ATHLETIC COMPLEX

POOL FLOOR PLAN

CODE ID. NO. 80091	SIZE D
SCALE: AS NOTED	
EFD NO. 509078	
STA. PROJ. NO. P-015	
SPEC. NO. 05-00-8090	
CONSTR. CONTR. NO. N62470-B-00-8090	
NAVFAC DRAWING NO. 4409078	
SHEET 209 OF 284	

M2.3

DRAWFORM REVISION 27 JULY 98

FILENAME: 8090M203.DWG, PLOT SCALE: 1=1, SAVED ON 10/01/99 AT 15:02, XREFS: U:\PROJECTS\ACTIVE\8090 WATERFRONT ATHLETIC\DRAWINGS\401\8090AX02.DWG, U:\PROJECTS\ACTIVE\8090 WATERFRONT ATHLETIC\DRAWINGS\403\8090MX03.DWG,

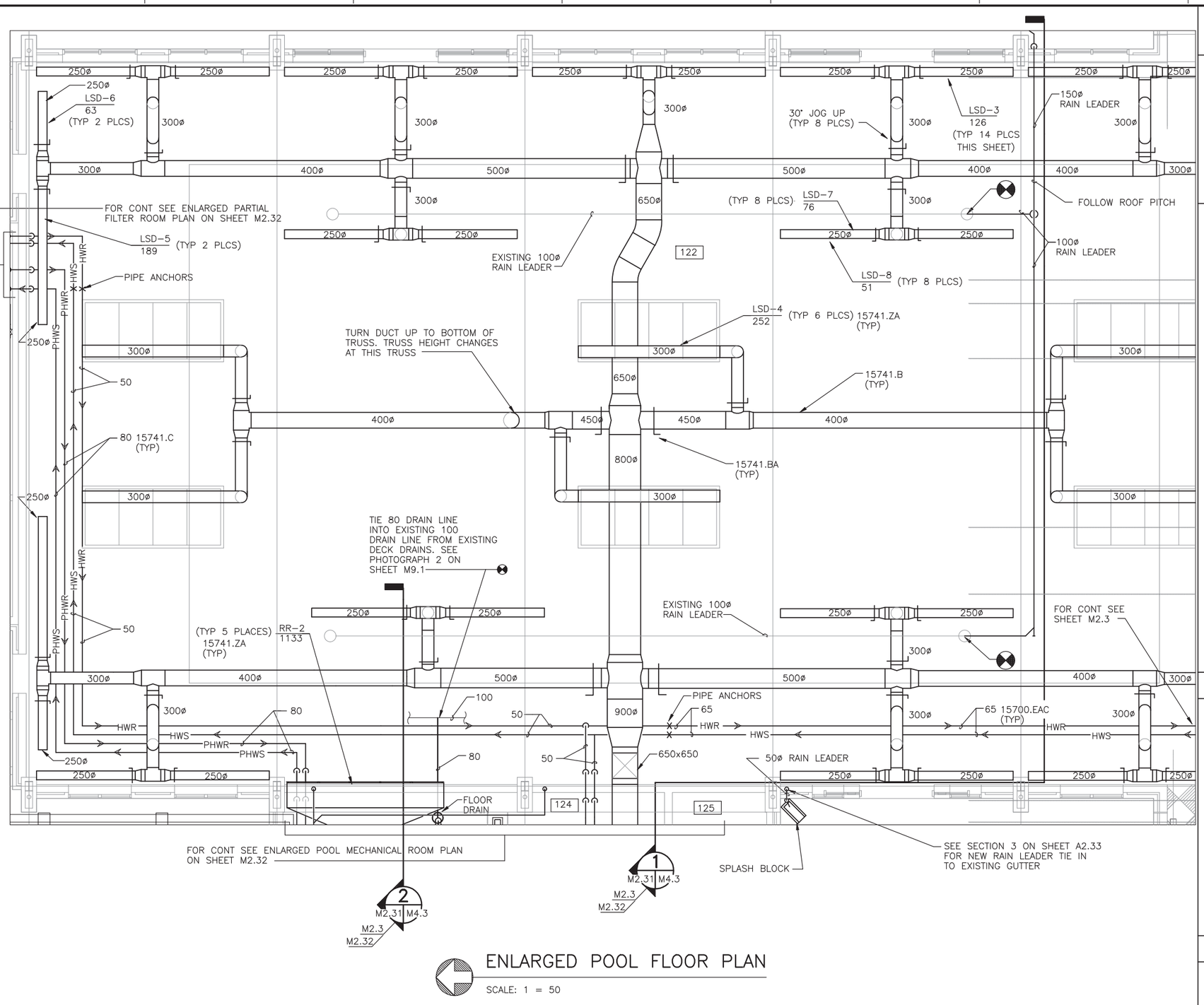

ENLARGED POOL FLOOR PLAN

SCALE: 1 = 50

KEYNOTES

DIV 15 MECHANICAL

15700.EAC	COPPER TUBING PIPING SYSTEM, HOT WATER
15741.B	FRP DUCT SYSTEMS
15741.BA	DAMPER-FRP
15741.C	CPVC PIPING SYSTEMS
15741.ZA	DIFFUSERS AND REGISTERS

KEYPLAN

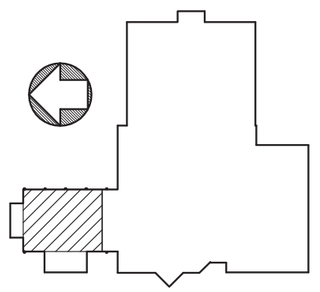

GRAPHIC SCALE

1:50 0 1000 3000 5000mm

REVISIONS

STM	DESCRIPTION	DATE	APPROVED

DESIGNED & ENGINEERED BY: LANTDIV NAVAL FACILITIES ENGINEERING COMMAND

SEAL

APPROVED

ACTIVITY - SATISFACTORY TO

DATE

APPROVED

FOR EFD FOR COMMANDER NAVFAC

DATE

A/E	EFD
DESIGN	JTI
DRAWN	JTI
REVIEW	BDC
QC	
CHIEF ARCH./ ENGR.	
PROJECT MANAGER	DWB
FIRE PROTECTION	
BRANCH MANAGER	
DESIGN DIRECTOR	

NAVAL FACILITIES ENGINEERING COMMAND
DEPARTMENT OF THE NAVY
ATLANTIC DIVISION
NAVAL STATION
NORFOLK, VIRGINIA
NAVAL STATION
NORFOLK, VIRGINIA

WATERFRONT ATHLETIC COMPLEX

ENLARGED POOL PLAN

CODE ID. NO. 80091	SIZE D
SCALE:	AS NOTED
EFD NO.	509079
STA. PROJ. NO.	P-015
SPEC. NO.	05-00-8090
CONSTR. CONTR. NO.	N62470-00-B-8090
NAVFAC DRAWING NO.	4409079
SHEET	210 OF 284

M2.31

DRAWFORM REVISION 27 JULY 98

D C B A

8 7 6 5 4 3 2 1

FILENAME: 8090M2031.DWG, PLOT SCALE: 1=1, SAVED ON 10/01/99 AT 15:02, XREFS: U:\PROJECTS\ACTIVE\8090 WATERFRONT ATHLETIC\DRAWINGS\403\8090AX03.DWG, U:\PROJECTS\ACTIVE\8090 WATERFRONT ATHLETIC\DRAWINGS\401\8090AX02.DWG, U:\PROJECTS\ACTI

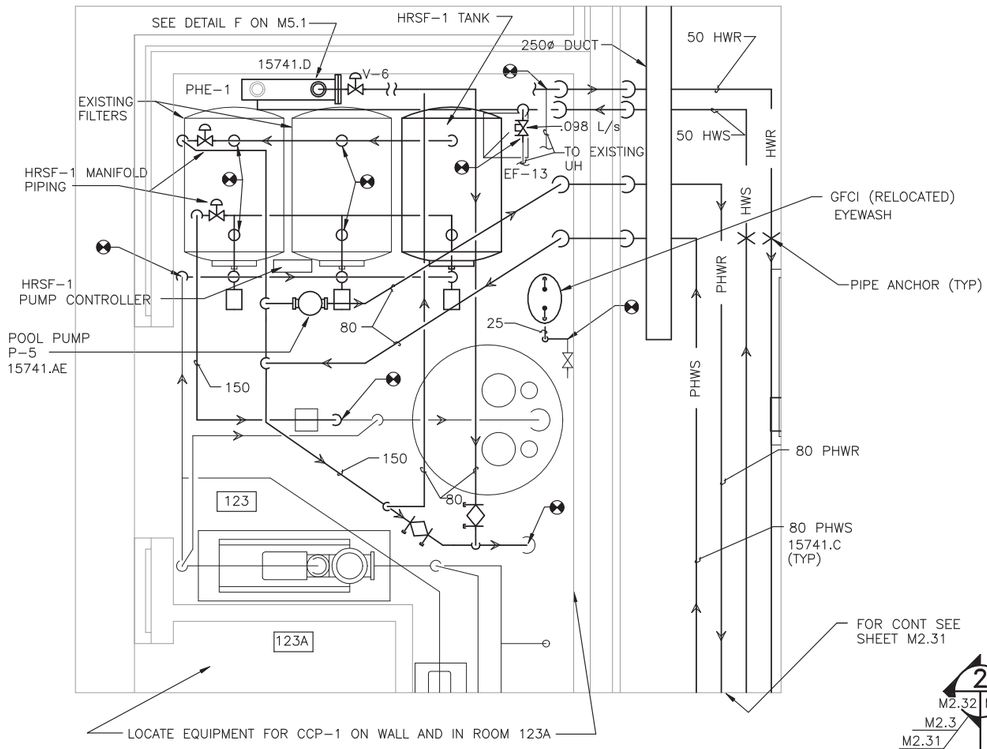

ENLARGED PARTIAL FILTER ROOM PLAN

SCALE: 1 = 25

HIGH RATE SAND FILTER, MANIFOLD PIPING, AND PUMP CONTROLLER SCHEDULE

HIGH RATE SAND FILTER, MANIFOLD PIPING, AND PUMP CONTROLLER SHALL BE SUPPLIED BY ENVIRONMENTAL PRODUCTS DIVISION. FILTER MODEL NUMBER EPD 150-701

MARK	POOL WATER FLOW L/s	FILTER CAPACITY L/s/M2	TANK DIMENSIONS	
			DIA	LENGTH
HRSF-1	11.1	10.2	914	1220

CHEMICAL CONTROL PACKAGE SCHEDULE

MARK	CHEMICAL CONTROL PACKAGE SHALL HAVE THE FOLLOWING EQUIPMENT AS SUPPLIED BY USFILTER/STRANCO ECS
CCP-1	1. ECS CHEMISTRY CONTROLLER 2. HR, PH, AND TEMPERATURE SENSORS 3. LOCKABLE ENCLOSURE CONTAINING CONTROLLER AND PROBE SAMPLER CHAMBER WITH ROTARY FLOWSWITCH. 4. CHEMICAL PORTIONING UNIT (CPU) USED TO ESTABLISH FEED RATIO OF CHLORINE TO HRR ENHANCER. 5. CALCIUM HYPROCHLORITE FEED SYSTEM WITH BOOSTER PUMP AND HIGH EFFICIENCY INDUCTIVE FEED DEVICE AND HRR ENHANCEMENT SYSTEM WHICH INCLUDES TANKS, BATCH MIXER, AND FEED PUMP.

NOTE: ALL WORK ON POOL CHEMICAL TREATMENT EQUIPMENT SHALL BE DONE BY TRAINED STRANCO TECHNICIANS.

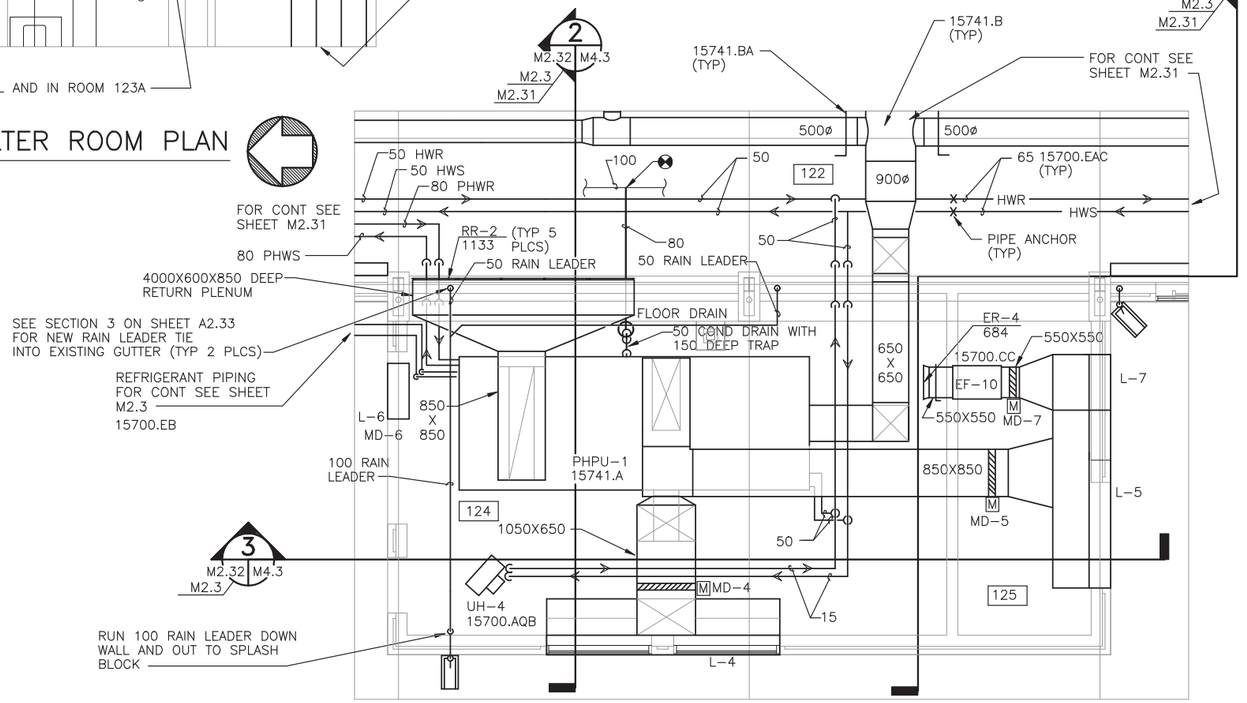

ENLARGED POOL MECHANICAL ROOM PLAN

SCALE: 1 = 50

KEYNOTES

DIV 15 MECHANICAL

15700.AQB	UNIT HEATERS, HOT WATER
15700.CC	IN-LINE CENTRIFUGAL FANS
15700.EAC	COPPER TUBING PIPING SYSTEM, HOT WATER
15700.EB	COPPER REFRIGERANT PIPING
15741.A	WATER-SOURCE HEAT PUMP-SPECIAL SWIMMING POOL SERVICE
15741.AE	INLINE CENTRIFUGAL PUMPS
15741.B	FRP DUCT SYSTEMS
15741.BA	DAMPER-FRP
15741.C	CPVC PIPING SYSTEMS
15741.D	POOL HEAT EXCHANGER

KEYPLAN

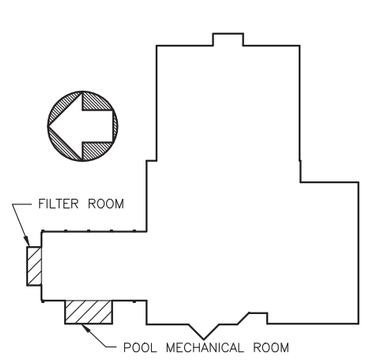

GRAPHIC SCALE

1:25 0 500 1500 2500mm

1:50 0 1000 3000 5000mm

REVISIONS

NO.	DESCRIPTION	DATE	APPROVED
1	ADDENDUM 1	10/07/99	

DESIGNED & ENGINEERED BY: LANTDIV NAVAL FACILITIES ENGINEERING COMMAND

SEAL

APPROVED
ACTIVITY - SATISFACTORY TO
DATE
APPROVED
FOR EFD FOR COMMANDER NAVFAC
DATE

A/E	EFD
DESIGN	JTI
DRAWN	JTI
REVIEW	BDC
QC	
CHIEF	ARCH./ ENGR.
PROJECT MANAGER	DWB
FIRE PROTECTION	
BRANCH MANAGER	
DESIGN DIRECTOR	

DEPARTMENT OF THE NAVY
NAVAL FACILITIES ENGINEERING COMMAND
ATLANTIC DIVISION
NAVAL STATION
NORFOLK, VIRGINIA

WATERFRONT ATHLETIC COMPLEX

ENLARGED PLANS AND SCHEDULES

CODE ID. NO. 80091	SIZE D
SCALE:	AS NOTED
EFD NO.	509080
STA PROJ. NO.	P-015
SPEC. NO.	05-00-8090
CONSTR. CONTR. NO.	N62470-00-B-8090
NAVFAC DRAWING NO.	4409080
SHEET	211 OF 284

M2.32

DRAWFORM REVISION 27 JULY 98

FILENAME: 8090M2032.DWG, PLOT SCALE: 1=1, SAVED ON 10/07/99 AT 09:06, XREFS: U:\PROJECTS\ACTIVE\8090 WATERFRONT ATHLETIC\DRAWINGS\403\8090AX03.DWG, U:\PROJECTS\ACTIVE\8090 WATERFRONT ATHLETIC\DRAWINGS\401\8090AX02.DWG, U:\PROJECTS\ACTI

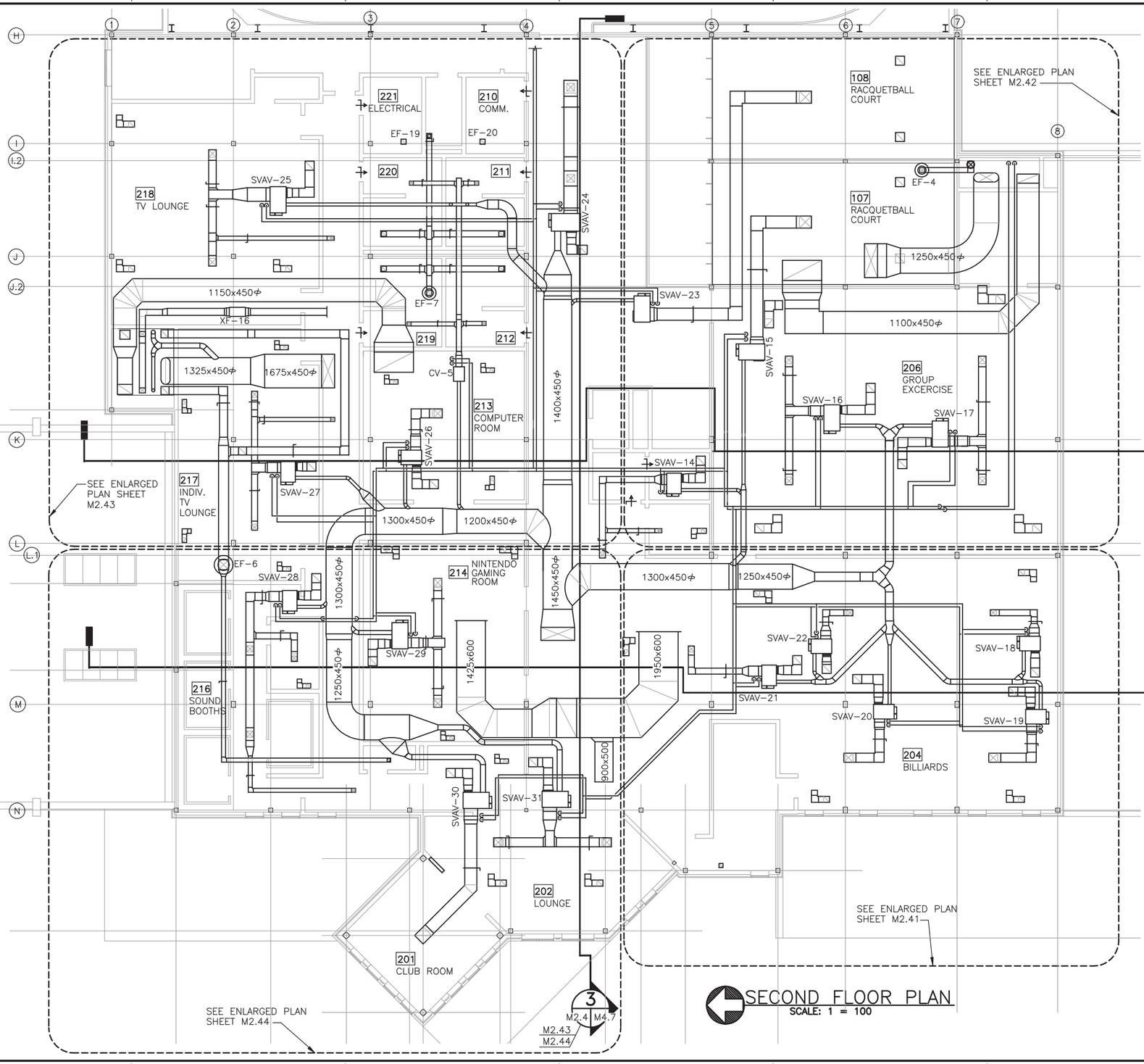

SECOND FLOOR PLAN
SCALE: 1 = 100

NOTES THIS SHEET

1. SEE 2ND FLOOR ENLARGED PLANS SHEETS M2.41, M2.42, M2.43, M2.44 FOR DETAILED INFORMATION.

2. BALANCING DAMPERS ABOVE GYPSUM CEILING SHALL REMAIN ACCESIBLE UNTIL SYSTEMS ARE TESTED, BALANCED AND CERTIFIED.

2ND FLOOR KEYPLAN

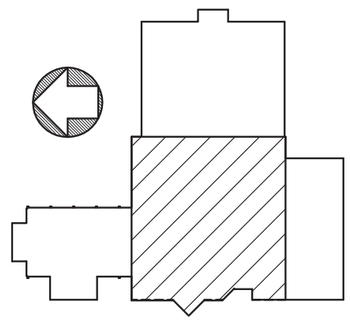

GRAPHIC SCALE

1:100 0 1000 5000 10000mm

REVISIONS

STM	DESCRIPTION	DATE	APPROVED

DESIGNED & ENGINEERED BY: LANTDIV Naval Facilities Engineering Command

APPROVED
ACTIVITY – SATISFACTORY TO
DATE
APPROVED
FOR EFD FOR COMMANDER NAVFAC
DATE

A/E	EFD
DESIGN	TLH
DRAWN	TLH
REVIEW	BDC
QC	
CHIEF ARCH./ ENGR.	
PROJECT MANAGER	
FIRE PROTECTION	
BRANCH MANAGER	
DESIGN DIRECTOR	

DEPARTMENT OF THE NAVY
NAVAL FACILITIES ENGINEERING COMMAND
ATLANTIC DIVISION
NAVAL STATION
NORFOLK, VIRGINIA
NAVAL STATION
NORFOLK, VA
WATERFRONT ATHLETIC COMPLEX
2ND FLOOR PLAN

CODE ID. NO. 80091	SIZE D
SCALE:	AS NOTED
EFD NO.	509081
STA PROJ. NO.	P-015
SPEC. NO.	05-00-8090
CONSTR. CONTR. NO.	N62470-B-00-9-8090
NAVFAC DRAWING NO.	4409081
SHEET	212 OF 284

M2.4

DRAWFORM REVISION 05 APRIL 99

FILENAME: 8090M204.DWG, PLOT SCALE: 1=1, SAVED ON 10/07/99 AT 09:45, XREFS: U:\PROJECTS\ACTIVE\8090 WATERFRONT ATHLETIC\DRAWINGS\403\8090MX04.DWG, U:\PROJECTS\ACTIVE\8090 WATERFRONT ATHLETIC\DRAWINGS\401\8090AX02.DWG, U:\PROJECTS\ACTIV

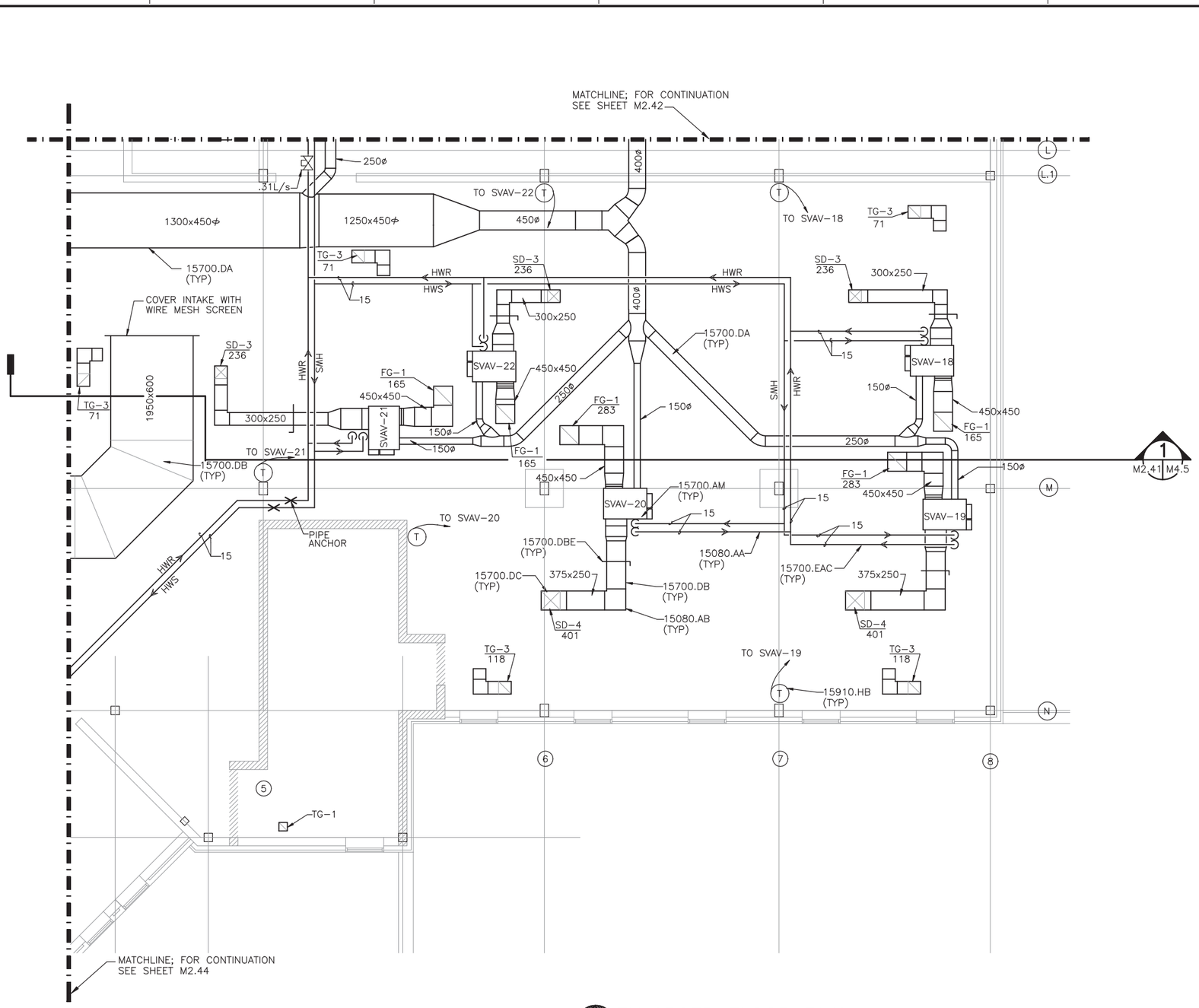

ENLARGED FLOOR PLAN
SCALE: 1 = 50

KEYNOTES

DIV 15 MECHANICAL

15080.AA	INSULATION, PIPING
15080.AB	INSULATION, DUCT
15700.AM	SERIES FAN POWERED VARIABLE VOLUME (VAV) TERMINALS
15700.DA	DUCTS OF PRESSURE CLASSES 746 TO 2490 Pa (GAGE) 3 TO 10 INCH WG
15700.DB	DUCTS OF PRESSURE CLASSES LESS THAN 746 Pa (GAGE) 3 INCH WG
15700.DBE	DUCTS OF PRESSURE CLASSES LESS THAN 746 Pa (GAGE), 3 INCH WG, DAMPERS
15700.DC	DIFFUSERS, REGISTERS AND GRILLES
15700.EAC	COPPER TUBING PIPING SYSTEM, HOT WATER
15910.HB	RESISTANCE TEMPERATURE DETECTORS (RTD'S)

2ND FLOOR KEYPLAN

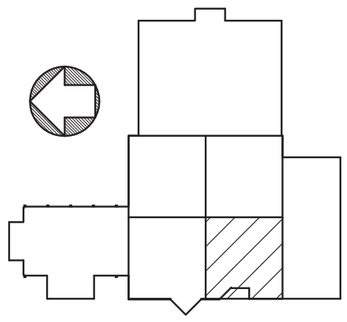

GRAPHIC SCALE

1:50 0 1000 3000 5000mm

REVISIONS

DESCRIPTION	DATE	APPROVED
STAL		

DESIGNED & ENGINEERED BY: LANTDIV Naval Facilities Engineering Command

SEAL

APPROVED
ACTIVITY – SATISFACTORY TO
DATE
APPROVED
FOR EFD FOR COMMANDER NAVFAC
DATE

A/E	EFD
DESIGN	TLH
DRAWN	TLH
REVIEW	BDC
QC	
CHIEF ARCH./ ENGR.	
PROJECT MANAGER	
FIRE PROTECTION	
BRANCH MANAGER	
DESIGN DIRECTOR	

DEPARTMENT OF THE NAVY
NAVAL STATION
NAVAL FACILITIES ENGINEERING COMMAND
ATLANTIC DIVISION
NAVAL STATION NORFOLK, VIRGINIA
NORFOLK, VA

WATERFRONT ATHLETIC COMPLEX

2ND FLOOR ENLARGED PLAN

CODE ID. NO. 80091	SIZE D
SCALE:	AS NOTED
EFD NO.	509082
STA. PROJ. NO.	P-015
SPEC. NO.	05-00-8090
CONSTR. CONTR. NO.	N62470-B-00-9-8090
NAVFAC DRAWING NO.	4409082
SHEET 213 OF 284	

M2.41

DRAWFORM REVISION 05 APRIL 99

FILENAME: 8090M2041.DWG, PLOT SCALE: 1=1, SAVED ON 10/07/99 AT 09:48, XREFS: U:\PROJECTS\ACTIVE\8090 WATERFRONT ATHLETIC\DRAWINGS\403\8090MX04.DWG, U:\PROJECTS\ACTIVE\8090 WATERFRONT ATHLETIC\DRAWINGS\401\8090AX02.DWG,

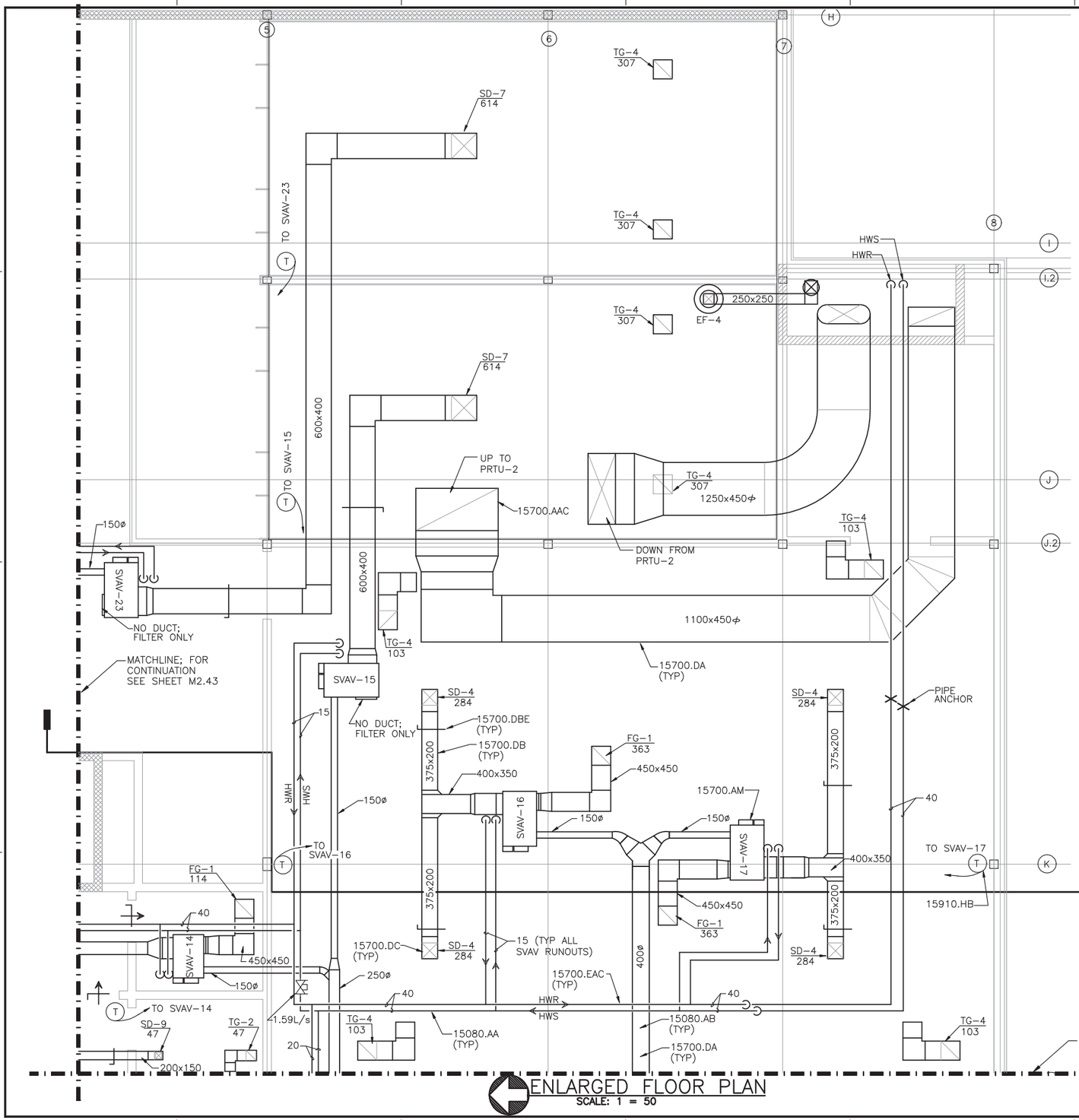

ENLARGED FLOOR PLAN
SCALE: 1 = 50

KEYNOTES

DIV 15 MECHANICAL

15080.AA	INSULATION, PIPING
15080.AB	INSULATION, DUCT
15700.AAC	PACKAGED AIR-CONDITIONERS, ROOF CURB
15700.AM	SERIES FAN POWERED VARIABLE VOLUME (VAV) TERMINALS
15700.DA	DUCTS OF PRESSURE CLASSES 746 TO 2490 Pa (GAGE) 3 TO 10 WG
15700.DB	DUCTS OF PRESSURE CLASSES LESS THAN 746 Pa (GAGE) 3 INCH WG
15700.DBE	DUCTS OF PRESSURE CLASSES LESS THAN 746 Pa (GAGE) 3 INCH WG, DAMPERS
15700.DC	DIFFUSERS, REGISTERS AND GRILLES
15700.EAC	COPPER TUBING PIPING SYSTEM, HOT WATER
15910.HB	RESISTANCE TEMPERATURE DETECTORS (RTD'S)

2ND FLOOR KEYPLAN

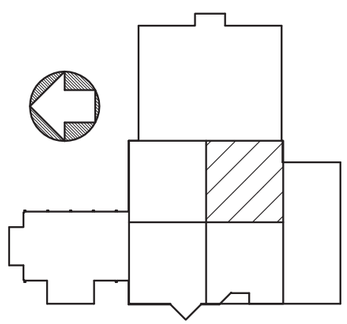

GRAPHIC SCALE

1:50 0 1000 3000 5000mm

REVISIONS

STM	DESCRIPTION	DATE	APPROVED

DESIGNED & ENGINEERED BY: LANTDIV Naval Facilities Engineering Command

SEAL

APPROVED
ACTIVITY - SATISFACTORY TO
DATE
APPROVED
FOR EFD FOR COMMANDER NAVFAC
DATE

A/E	EFD
DESIGN	TLH
DRAWN	TLH
REVIEW	BDC
QC	
CHIEF ARCH./ ENGR.	
PROJECT MANAGER	
FIRE PROTECTION	
BRANCH MANAGER	
DESIGN DIRECTOR	

DEPARTMENT OF THE NAVY
NAVAL STATION
ATLANTIC DIVISION
NAVAL FACILITIES ENGINEERING COMMAND
NORFOLK, VIRGINIA

WATERFRONT ATHLETIC COMPLEX

NAVAL STATION NORFOLK, VA

2ND FLOOR ENLARGED PLAN

CODE ID. NO. 80091	SIZE D
SCALE: AS NOTED	
EFD NO. 509083	
STA. PROJ. NO. P-015	
SPEC. NO. 05-00-8090	
CONSTR. CONTR. NO. N62470-B-00-9-8090	
NAVFAC DRAWING NO. 4409083	
SHEET 214 OF 284	

M2.42

DRAWFORM REVISION 05 APRIL 99

FILENAME: 8090M2042.DWG, PLOT SCALE: 1=1, SAVED ON 10/07/99 AT 09:49, XREFS: U:\PROJECTS\ACTIVE\8090 WATERFRONT ATHLETIC\DRAWINGS\401\8090AX02.DWG, U:\PROJECTS\ACTIVE\8090 WATERFRONT ATHLETIC\DRAWINGS\403\8090MX04.DWG, U:\PROJECTS\ACTIVE\8090 WATERFRONT ATHLETIC\DRAWINGS\403\8090M2042.DWG,

KEYNOTES

DIV 15 MECHANICAL

15080.AA	INSULATION, PIPING
15080.AB	INSULATION, DUCT
15700.AAC	PACKAGED AIR-CONDITIONERS, ROOF CURB
15700.AM	SERIES FAN POWERED VARIABLE VOLUME (VAV) TERMINALS
15700.CA	CENTRIFUGAL FANS
15700.CC	IN-LINE CENTRIFUGAL FANS
15700.CF	BATHROOM EXHAUST FANS
15700.DA	DUCTS OF PRESSURE CLASSES 746 TO 2490 Pa (GAGE) 3 TO 10 WG
15700.DB	DUCTS OF PRESSURE CLASSES LESS THAN 746 Pa (GAGE) 3 INCH WG
15700.DBE	DUCTS OF PRESSURE CLASSES LESS THAN 746 Pa (GAGE) 3 INCH WG, DAMPERS
15700.DC	DIFFUSERS, REGISTERS AND GRILLES
15700.EAC	COPPER TUBING PIPING SYSTEM, HOT WATER
15700.ZJ	CONSTANT AIR VOLUME UNIT
15910.HB	RESISTANCE TEMPERATURE DETECTORS (RTD'S)

2ND FLOOR KEYPLAN

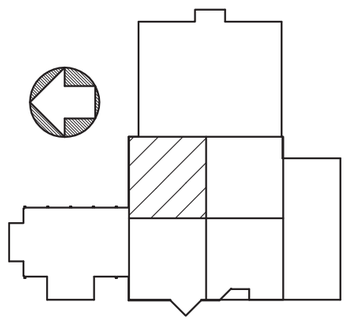

GRAPHIC SCALE

1:50 0 1000 3000 5000mm

ENLARGED FLOOR PLAN

SCALE: 1 = 50

REVISIONS

NO.	DESCRIPTION	DATE	APPROVED
5			
4			
3			
2			
1			
0			

DESIGNED & ENGINEERED BY: LANTDIV NAVAL FACILITIES ENGINEERING COMMAND

SEAL

APPROVED

ACTIVITY - SATISFACTORY TO

DATE

APPROVED

FOR EFD FOR COMMANDER NAVFAC

DATE

A/E	EFD
DESIGN	TLH
DRAWN	TLH
REVIEW	BDC
QC	
CHIEF ARCH./ ENGR.	
PROJECT MANAGER	
FIRE PROTECTION	
BRANCH MANAGER	
DESIGN DIRECTOR	

DEPARTMENT OF THE NAVY
NAVAL STATION
ATLANTIC DIVISION
NAVAL FACILITIES ENGINEERING COMMAND
NORFOLK, VIRGINIA

WATERFRONT ATHLETIC COMPLEX

NAVAL STATION NORFOLK, VA

2ND FLOOR ENLARGED PLAN

CODE ID. NO. 80091	SIZE D
SCALE: AS NOTED	
EFD NO. 509084	
STA. PROJ. NO. P-015	
SPEC. NO. 05-00-8090	
CONSTR. CONTR. NO. N62470-B-00-9-8090	
NAVFAC DRAWING NO. 4409084	
SHEET 215 OF 284	
M2.43	

DRAWFORM REVISION 05 APRIL 99

FILENAME: 8090M2043.DWG, PLOT SCALE: 1=1, SAVED ON 10/07/99 AT 09:52, XREFS: U:\PROJECTS\ACTIVE\8090 WATERFRONT ATHLETIC\DRAWINGS\403\8090MX04.DWG, U:\PROJECTS\ACTIVE\8090 WATERFRONT ATHLETIC\DRAWINGS\401\8090AX02.DWG, U:\PROJECTS\ACTI

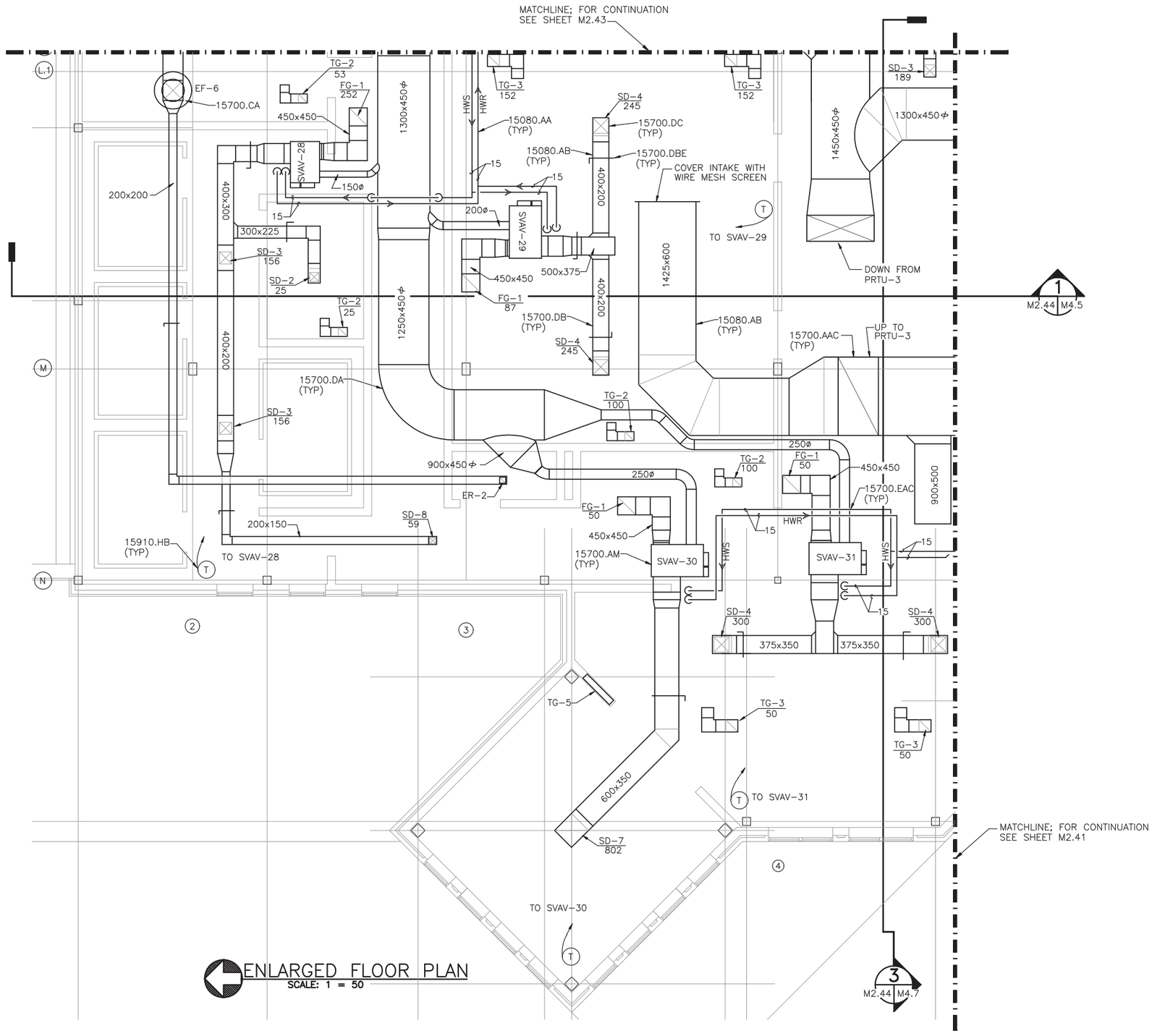

ENLARGED FLOOR PLAN
SCALE: 1 = 50

KEYNOTES

DIV 15 MECHANICAL

15080.AA	INSULATION, PIPING
15080.AB	INSULATION, DUCT
15700.AAC	PACKAGED AIR-CONDITIONERS, ROOF CURB
15700.AM	SERIES FAN POWERED VARIABLE VOLUME (VAV) TERMINALS
15700.CA	CENTRIFUGAL FANS
15700.DA	DUCTS OF PRESSURE CLASSES 746 TO 2490 Pa (GAGE) 3 TO 10 WG
15700.DB	DUCTS OF PRESSURE CLASSES LESS THAN 746 Pa (GAGE) 3 INCH WG
15700.DBE	DUCTS OF PRESSURE CLASSES LESS THAN 746 Pa (GAGE) 3 INCH WG, DAMPERS
15700.DC	DIFFUSERS, REGISTERS AND GRILLES
15700.EAC	COPPER TUBING PIPING SYSTEM, HOT WATER
15910.HB	RESISTANCE TEMPERATURE DETECTORS (RTD'S)

2ND FLOOR KEYPLAN

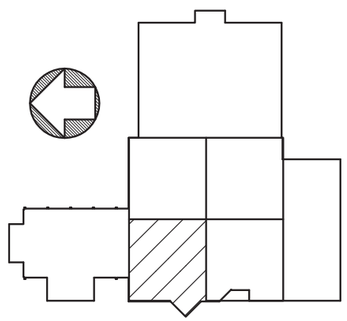

GRAPHIC SCALE

1:50 0 1000 3000 5000mm

REVISIONS

NO.	DESCRIPTION	DATE	APPROVED

DESIGNED & ENGINEERED BY: LANTDIV NAVAL FACILITIES ENGINEERING COMMAND

SEAL

APPROVED
ACTIVITY - SATISFACTORY TO
DATE
APPROVED
FOR EFD FOR COMMANDER NAVFAC
DATE

A/E	EFD
DESIGN	TLH
DRAWN	TLH
REVIEW	BDC
QC	
CHIEF ARCH./ ENGR.	
PROJECT MANAGER	
FIRE PROTECTION	
BRANCH MANAGER	
DESIGN DIRECTOR	

DEPARTMENT OF THE NAVY
NAVAL STATION
NAVAL FACILITIES ENGINEERING COMMAND
ATLANTIC DIVISION
NORFOLK, VIRGINIA
NAVAL STATION NORFOLK, VA
WATERFRONT ATHLETIC COMPLEX
2ND FLOOR ENLARGED PLAN

CODE ID. NO. 80091	SIZE D
SCALE: AS NOTED	
EFD NO. 509085	
STA. PROJ. NO. P-015	
SPEC. NO. 05-00-8090	
CONSTR. CONTR. NO. N62470-B-00-9-8090	
NAVFAC DRAWING NO. 4409085	
SHEET 216 OF 284	

M2.44

DRAWFORM REVISION 05 APRIL 99

D C B A

FILENAME: 8090M2044.DWG, PLOT SCALE: 1=1, SAVED ON 10/07/99 AT 09:54, XREFS: U:\PROJECTS\ACTIVE\8090 WATERFRONT ATHLETIC\DRAWINGS\401\8090AX02.DWG, U:\PROJECTS\ACTIVE\8090 WATERFRONT ATHLETIC\DRAWINGS\403\8090MX04.DWG, U:\PROJECTS\ACTIVE\8090 WATERFRONT ATHLETIC\DRAWINGS\401\8090AX02.DWG, U:\PROJECTS\ACTI

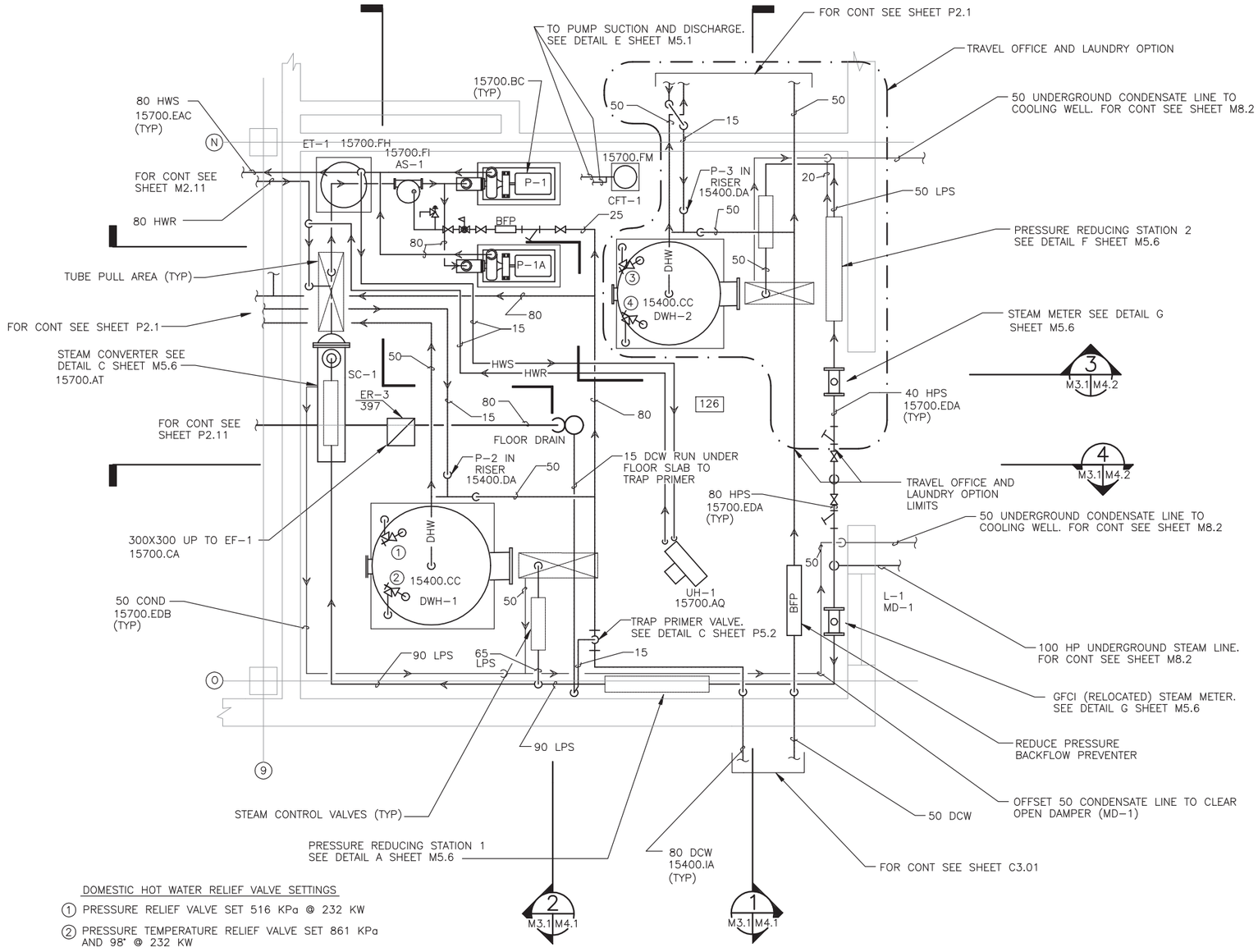

DOMESTIC HOT WATER RELIEF VALVE SETTINGS

1. PRESSURE RELIEF VALVE SET 516 KPa @ 232 KW
2. PRESSURE TEMPERATURE RELIEF VALVE SET 861 KPa AND 98° @ 232 KW
3. PRESSURE RELIEF VALVE SET 516 KPa @ 154 KW
4. PRESSURE TEMPERATURE RELIEF VALVE SET 861 KPa AND 98° @ 154 KW

ENLARGED MECHANICAL ROOM PLAN

SCALE: 1 = 25

KEYNOTES

DIV 15 MECHANICAL

15400.CC	EQUIPMENT, WATER HEATERS (STEAM HEATED)
15400.DA	PUMPS, INLINE WATER
15400.IA	DOMESTIC WATER PIPING, SOLDERED JOINT COPPER
15700.AQ	UNIT HEATERS
15700.AT	HOT WATER CONVERTERS
15700.BC	END SUCTION WATER PUMPS
15700.CA	CENTRIFUGAL FANS
15700.EAC	COPPER TUBING PIPING SYSTEM, HOT WATER
15700.EDA	STEEL PIPING SYSTEMS, STEAM
15700.EDB	STEEL PIPING SYSTEMS, CONDENSATE
15700.FH	EXPANSION TANKS
15700.FI	AIR SEPARATORS
15700.FM	CHEMICAL FEED TANK

KEYPLAN

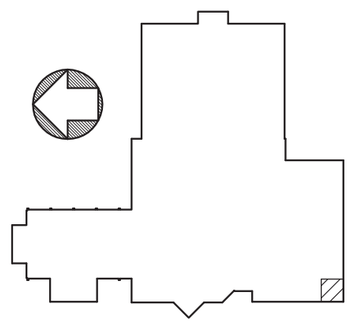

GRAPHIC SCALE

1:25 0 500 1500 2500mm

REVISIONS

STM	DESCRIPTION	DATE	APPROVED

DESIGNED & ENGINEERED BY: LANTDIV NAVAL FACILITIES ENGINEERING COMMAND

SEAL

APPROVED
ACTIVITY – SATISFACTORY TO
DATE
APPROVED
FOR EFD FOR COMMANDER NAVFAC
DATE

A/E	EFD
DESIGN	JI/TH
DRAWN	JTI
REVIEW	BDC
QC	
CHIEF ARCH./ ENGR.	
PROJECT MANAGER	DWB
FIRE PROTECTION	
BRANCH MANAGER	
DESIGN DIRECTOR	

DEPARTMENT OF THE NAVY
NAVAL STATION
ATLANTIC DIVISION
NAVAL FACILITIES ENGINEERING COMMAND
NORFOLK, VIRGINIA

NAVAL STATION NORFOLK, VIRGINIA
WATERFRONT ATHLETIC COMPLEX
ENLARGED MECHANICAL ROOM PLAN

CODE ID. NO. 80091	SIZE D
SCALE:	AS NOTED
EFD NO.	509086
STA. PROJ. NO.	P-015
SPEC. NO.	05-00-8090
CONSTR. CONTR. NO.	N62470-B-00-8090
NAVFAC DRAWING NO.	4409086
SHEET	217 OF 284

M3.1

DRAWFORM REVISION 27 JULY 98

FILENAME: 8090M301.DWG, PLOT SCALE: 1=1, SAVED ON 10/06/99 AT 11:44, XREFS: NONE

D C B A

8 7 6 5 4 3 2 1

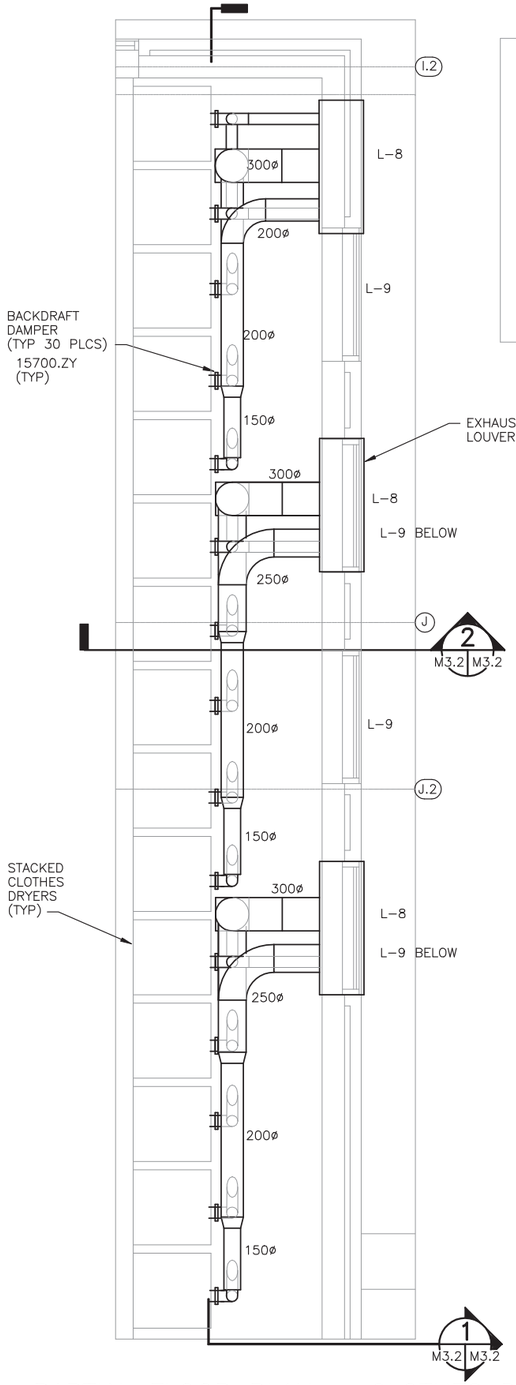

PARTIAL FLOOR PLAN – CLOTHES DRYERS

SCALE: 1 = 25

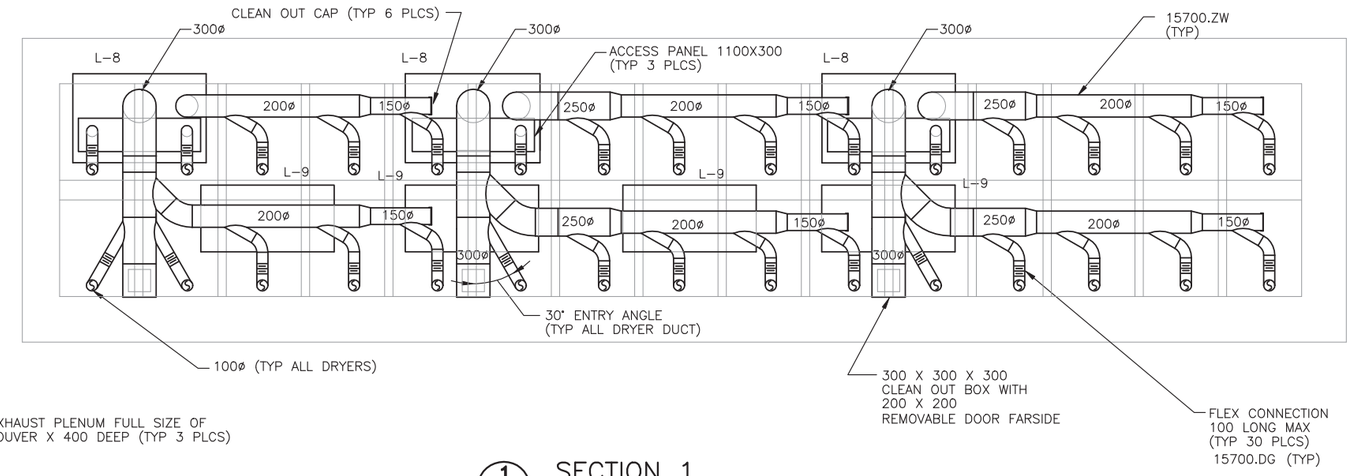

1 M3.2 M3.2 SECTION 1

SCALE: 1 = 25

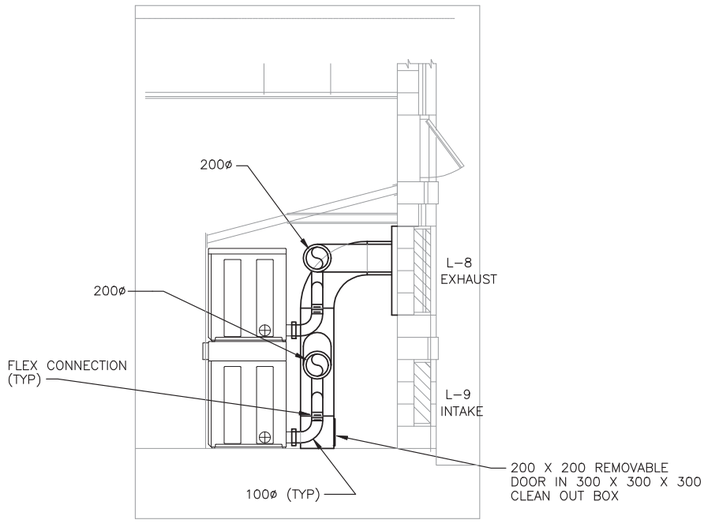

2 M3.2 M3.2 SECTION 2

SCALE: 1 = 25

KEYNOTES

DIV 15 MECHANICAL

15700.DG	FLEXIBLE ROUND DUCTS
15700.ZW	CLOTHES DRYER DUCTWORK
15700.ZY	CLOTHES DRYER BACK DRAFT DAMPER

KEYPLAN

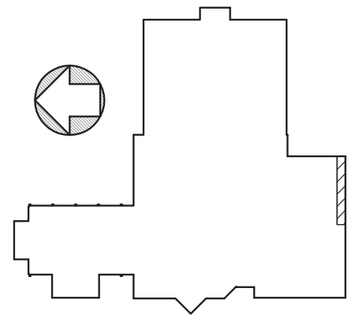

GRAPHIC SCALE

1:25 0 500 1500 2500mm

REVISIONS

NO.	DESCRIPTION	DATE	APPROVED

DESIGNED & ENGINEERED BY: LANTDIV NAVAL FACILITIES ENGINEERING COMMAND

SEAL

APPROVED

ACTIVITY – SATISFACTORY TO

DATE

APPROVED

FOR EFD FOR COMMANDER NAVFAC

DATE

A/E	EFD
DESIGN	JTI
DRAWN	JTI
REVIEW	BDC
QC	
CHIEF ARCH./ ENGR.	
PROJECT MANAGER	DWB
FIRE PROTECTION	
BRANCH MANAGER	
DESIGN DIRECTOR	

DEPARTMENT OF THE NAVY
NAVAL STATION
NAVAL STATION
ATLANTIC DIVISION
NAVAL FACILITIES ENGINEERING COMMAND
NORFOLK, VIRGINIA

WATERFRONT ATHLETIC COMPLEX

ENLARGED DRYER PLAN

CODE ID. NO. 80091 SIZE D

SCALE:

EFD NO. 509087

STA. PROJ. NO. P-015

SPEC. NO. 05-00-8090

CONSTR. CONTR. NO. N62470-00-B-8090

NAVFAC DRAWING NO. 4409087

SHEET 218 OF 284

M3.2

DRAWFORM REVISION 27 JULY 98

FILENAME: 8090M302.DWG, PLOT SCALE: 1=1, SAVED ON 10/04/99 AT 12:52, XREFS: U:\PROJECTS\ACTIVE\8090 WATERFRONT ATHLETIC\DRAWINGS\402\8090SMOD.DWG, U:\PROJECTS\ACTIVE\8090 WATERFRONT ATHLETIC\DRAWINGS\401\8090AX02.DWG, U:\PROJECTS\ACTIVE\8090 WATERFRONT ATHLETIC\DRAWINGS\402\8090SMOD.DWG, U:\PROJECTS\ACTIVE\8090 WATERFRONT ATHLETIC\DRAWINGS\401\8090AX02.DWG,

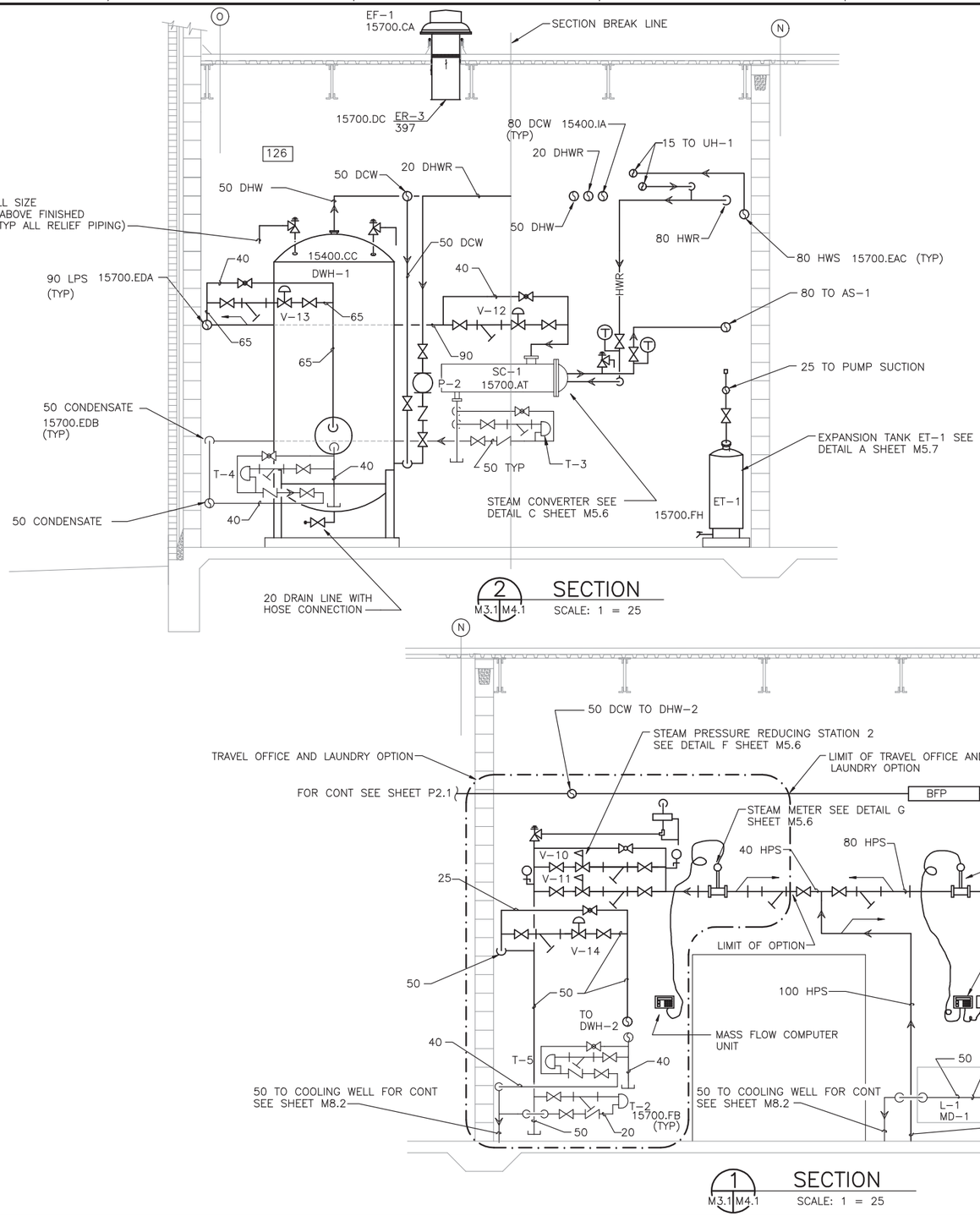

KEYNOTES

DIV 15 MECHANICAL

15400.CC	EQUIPMENT, WATER HEATERS (STEAM HEATED)
15400.IA	DOMESTIC WATER PIPING, SOLDERED JOINT COPPER
15700.AT	HOT WATER CONVERTERS
15700.CA	CENTRIFUGAL FANS
15700.DC	DIFFUSERS, REGISTERS AND GRILLES
15700.EAC	COPPER TUBING PIPING SYSTEM, HOT WATER
15700.EDA	STEEL PIPING SYSTEMS, STEAM
15700.EDB	STEEL PIPING SYSTEMS, CONDENSATE
15700.FB	TRAPS
15700.FH	EXPANSION TANKS

GRAPHIC SCALE

1:25 0 500 1500 2500mm

REVISIONS

SYM.	DESCRIPTION	DATE	APPROVED

DESIGNED & ENGINEERED BY:
LANTDIV
NAVAL FACILITIES ENGINEERING COMMAND

SEAL

APPROVED
ACTIVITY – SATISFACTORY TO
DATE
APPROVED
FOR EFD FOR COMMANDER NAVFAC
DATE

A/E	EFD
DESIGN	JTI
DRAWN	JTI
REVIEW	BDC
QC	
CHIEF ARCH./ ENGR.	
PROJECT MANAGER	DWB
FIRE PROTECTION	
BRANCH MANAGER	
DESIGN DIRECTOR	

NAVAL FACILITIES ENGINEERING COMMAND
ATLANTIC DIVISION
DEPARTMENT OF THE NAVY
NAVAL STATION NORFOLK, VIRGINIA
NAVAL STATION
WATERFRONT ATHLETIC COMPLEX
SECTIONS

CODE ID. NO. 80091	SIZE D
SCALE:	AS NOTED
EFD NO.	509088
STA. PROJ. NO.	P-015
SPEC. NO.	05-00-8090
CONSTR. CONTR. NO.	N62470-B-00-8090
NAVFAC DRAWING NO.	4409088
SHEET	219 OF 284

M4.1

FILENAME: 8090M401.DWG, PLOT SCALE: 1" = 1', SAVED ON 10/06/99 AT 14:12, XREFS: NONE

DRAWFORM REVISION 27 JULY 98

8 7 6 5 4 3 2 1

D C B A

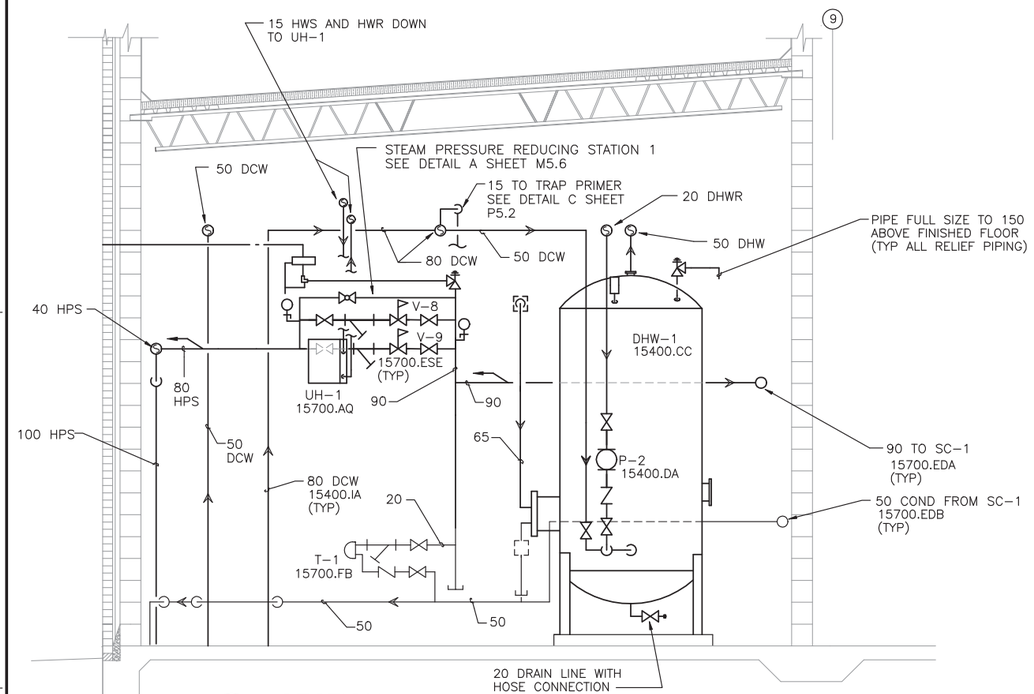

4 M3.1 M4.2 SECTION

SCALE 1 = 25

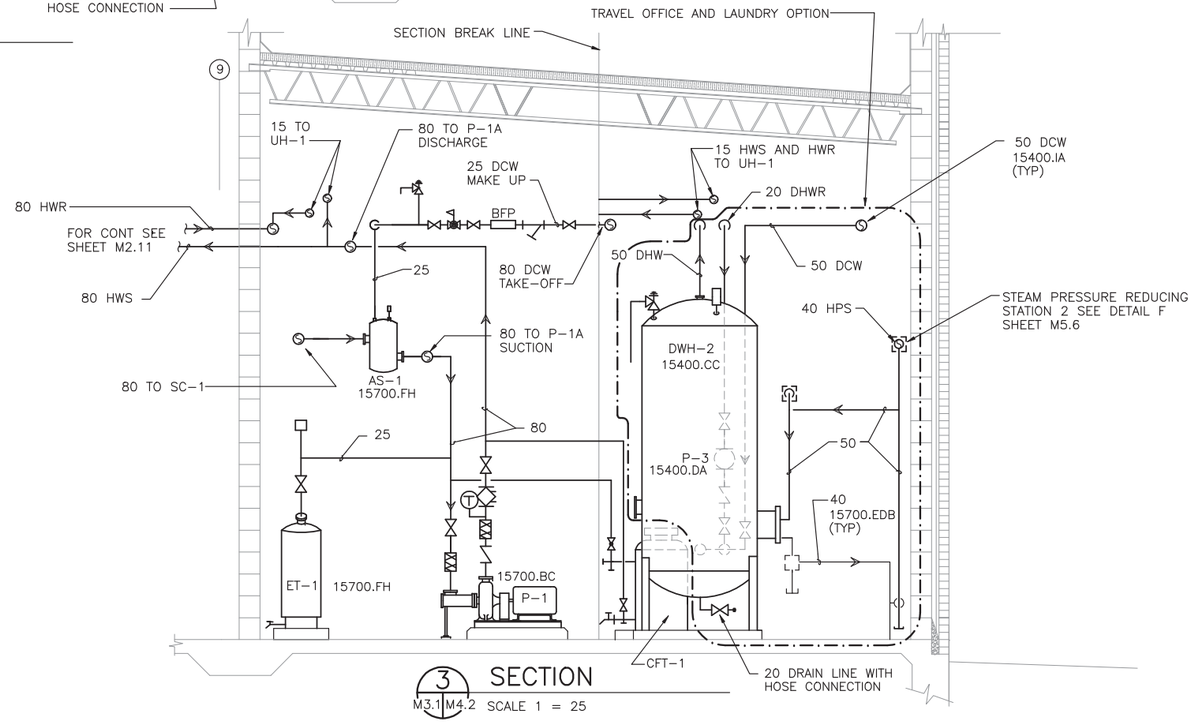

3 M3.1 M4.2 SECTION

SCALE 1 = 25

KEYNOTES

DIV 15 MECHANICAL

15400.CC	EQUIPMENT, WATER HEATERS (STEAM HEATED)
15400.DA	PUMPS, INLINE WATER
15400.IA	DOMESTIC WATER PIPING, SOLDERED JOINT COPPER
15700.AQ	UNIT HEATERS
15700.BC	END SUCTION WATER PUMPS
15700.EDA	STEEL PIPING SYSTEMS, STEAM
15700.EDB	STEEL PIPING SYSTEMS, CONDENSATE
15700.ESE	VALVES FOR STEAM 690 PA (GAGE) 100 PSIG AND GREATER,STEAM PRESSURE REGULATING VALVES
15700.FB	TRAPS
15700.FH	EXPANSION TANKS

GRAPHIC SCALE

1:25 0 500 1500 2500mm

REVISIONS

NO.	DESCRIPTION	DATE	APPROVED
5			
4			
3			
2			
1			

DESIGNED & ENGINEERED BY: LANTDIV NAVAL FACILITIES ENGINEERING COMMAND

SEAL

APPROVED

ACTIVITY – SATISFACTORY TO

DATE

APPROVED

FOR EFD FOR COMMANDER NAVFAC

DATE

A/E	EFD
DESIGN	JTI
DRAWN	JTI
REVIEW	BDC
QC	
CHIEF ARCH./ ENGR.	
PROJECT MANAGER	DWB
FIRE PROTECTION	
BRANCH MANAGER	
DESIGN DIRECTOR	

DEPARTMENT OF THE NAVY
NAVAL FACILITIES ENGINEERING COMMAND
ATLANTIC DIVISION
NAVAL STATION
NORFOLK, VIRGINIA
NAVAL STATION
NORFOLK, VIRGINIA

WATERFRONT ATHLETIC COMPLEX

SECTIONS

CODE ID. NO. 80091	SIZE D
SCALE: AS NOTED	
EFD NO. 509089	
STA. PROJ. NO. P-015	
SPEC. NO. 05-00-8090	
CONSTR. CONTR. NO. N62470-B-00-8090	
NAVFAC DRAWING NO. 4409089	
SHEET 220 OF 284	

M4.2

D C B A

8 7 6 5 4 3 2 1

DRAWFORM REVISION 27 JULY 98

FILENAME: 80900402.DWG, PLOT SCALE: 1" = 1', SAVED ON 10/04/99 AT 12:08, XREFS: NONE

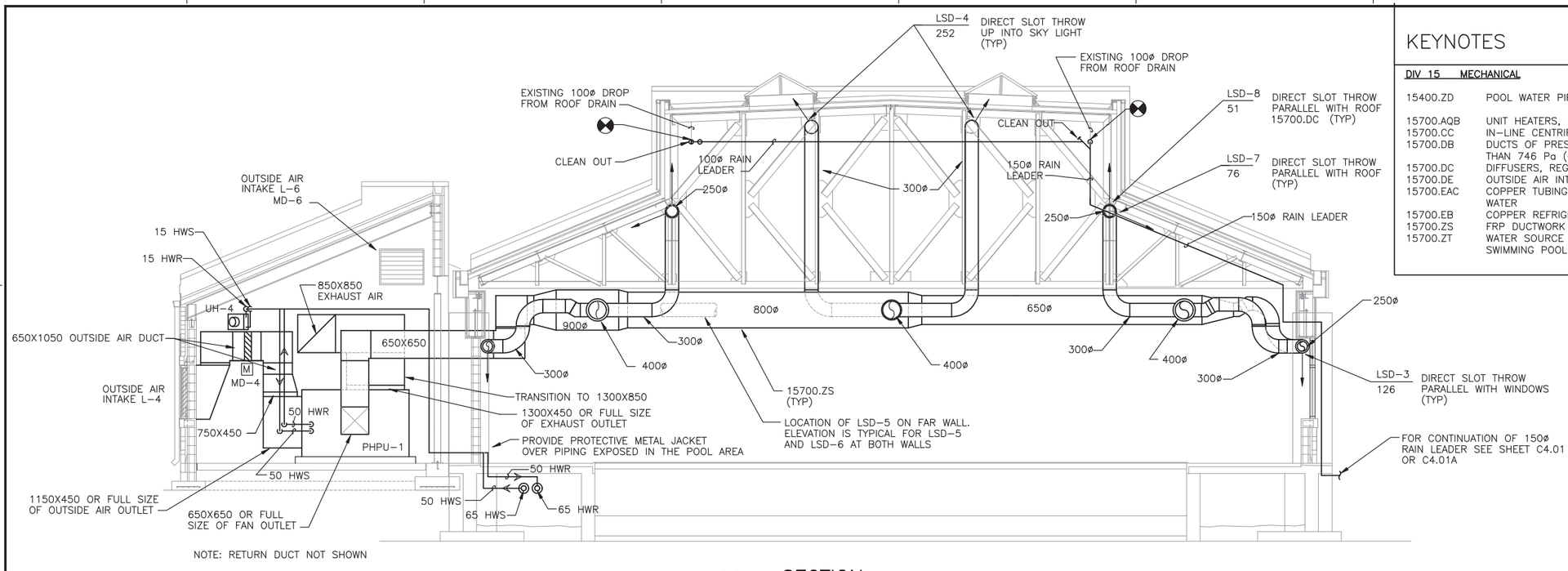

NOTE: RETURN DUCT NOT SHOWN

KEYNOTES

DIV 15 MECHANICAL

15400.ZD	POOL WATER PIPING, CPVC
15700.AQB	UNIT HEATERS, HOT WATER
15700.CC	IN-LINE CENTRIFUGAL FANS
15700.DB	DUCTS OF PRESSURE CLASSES LESS THAN 746 Pa (GAGE) 3 INCH WG
15700.DC	DIFFUSERS, REGISTERS AND GRILLES
15700.DE	OUTSIDE AIR INTAKE LOUVERS
15700.EAC	COPPER TUBING PIPING SYSTEM, HOT WATER
15700.EB	COPPER REFRIGERANT PIPING
15700.ZS	FRP DUCTWORK
15700.ZT	WATER SOURCE HEAT PUMP-SPECIAL SWIMMING POOL SERVICE

1 M2.3 M4.3 / M2.31 / M2.32 SECTION
SCALE 1 = 50

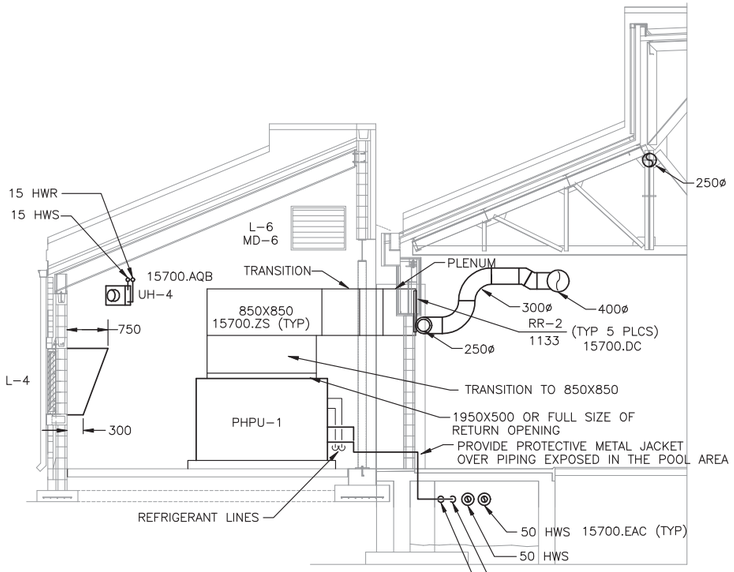

2 M2.3 M4.3 / M2.31 / M2.32 SECTION
SCALE 1 = 50

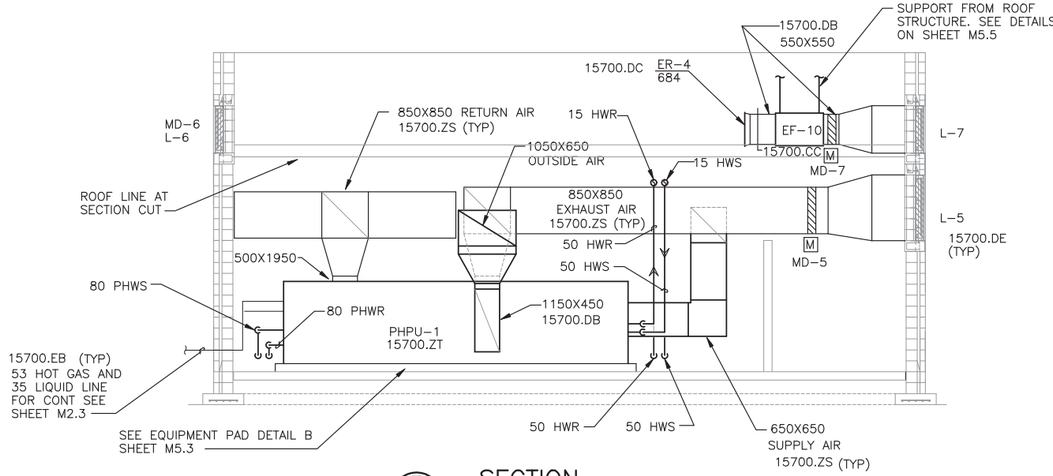

3 M2.3 M4.3 / M2.32 SECTION
SCALE 1 = 50

GRAPHIC SCALE
1:50 0 1000 3000 5000mm

REVISIONS

SYM	DESCRIPTION	DATE	APPROVED

DESIGNED & ENGINEERED BY: LANTDIV NAVAL FACILITIES ENGINEERING COMMAND

APPROVED
ACTIVITY - SATISFACTORY TO
DATE
APPROVED
FOR EFD FOR COMMANDER NAVFAC
DATE

A/E	EFD
DESIGN	JTI
DRAWN	JTI
REVIEW	BDC
QC	
CHIEF	ARCH./ ENGR.
PROJECT MANAGER	DWB
FIRE PROTECTION	
BRANCH MANAGER	
DESIGN DIRECTOR	

NAVAL FACILITIES ENGINEERING COMMAND
ATLANTIC DIVISION
NORFOLK, VIRGINIA
DEPARTMENT OF THE NAVY
NAVAL STATION
NAVAL STATION
NORFOLK, VIRGINIA
WATERFRONT ATHLETIC COMPLEX
SECTIONS

CODE ID. NO. 80091	SIZE D
SCALE:	AS NOTED
EFD NO.	509090
STA. PROJ. NO.	P-015
SPEC. NO.	05-00-8090
CONSTR. CONTR. NO.	N62470-B-00-8090
NAVFAC DRAWING NO.	4409090
SHEET	221 OF 284

M4.3

FILENAME: 8090M403.DWG, PLOT SCALE: 1" = 50', SAVED ON 10/04/99 AT 09:11, XREFS: NONE

DRAWFORM REVISION 27 JULY 98

8 7 6 5 4 3 2 1

D C B A

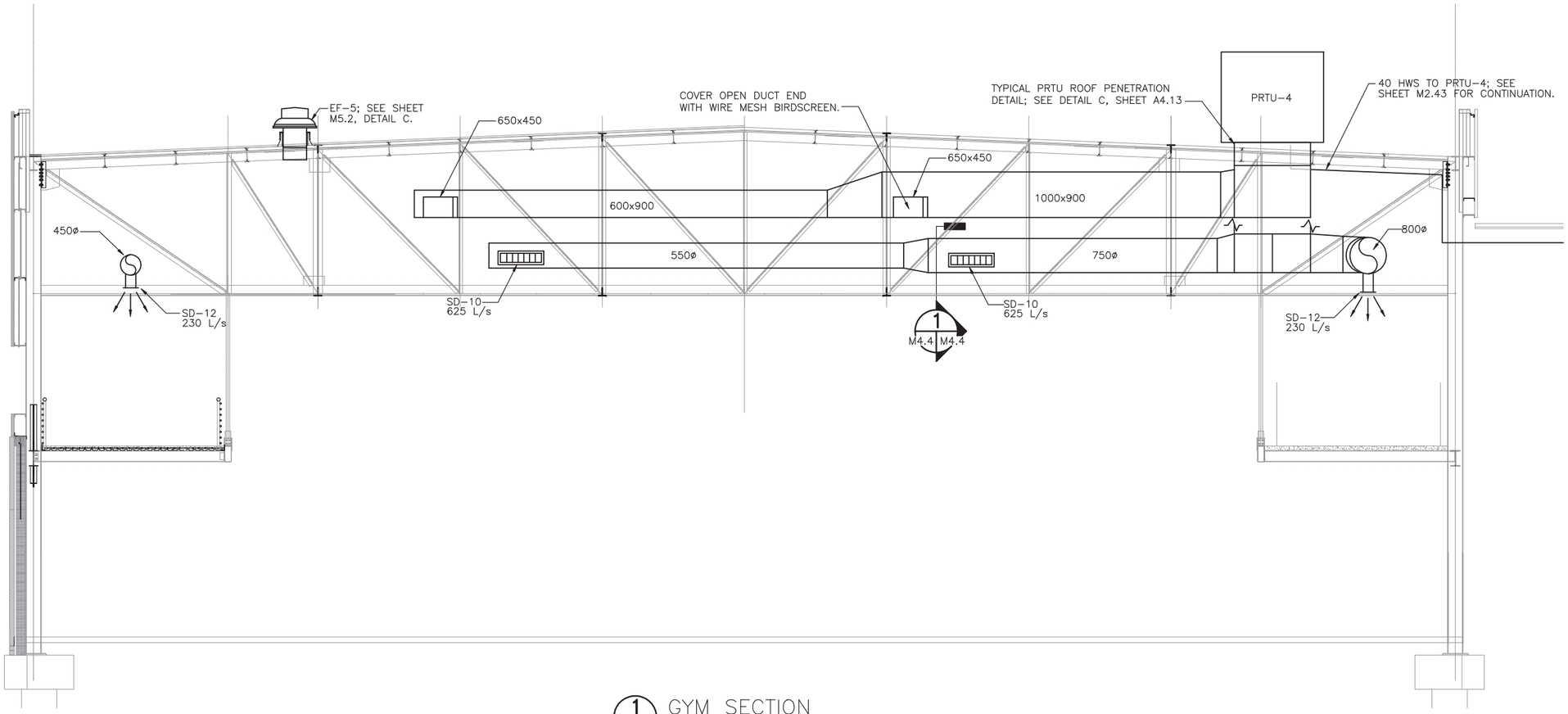

1 M2.2 M4.4 GYM SECTION
SCALE: 1 = 50

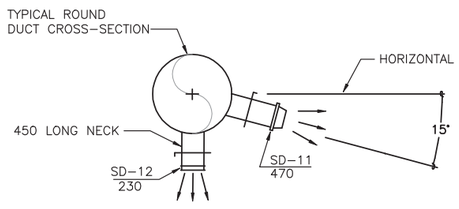

2 M2.2 M4.4 GRILLE AND DRUM DIFFUSER DETAIL
SCALE: NONE

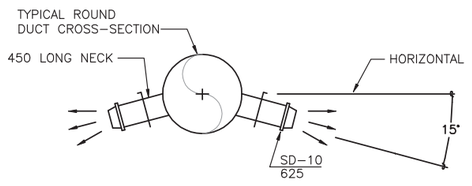

NOTE:
MOUNT DRUM DIFFUSERS INTO ROUND DUCT AT 15° BELOW HORIZONTAL WITH DIFFUSER AT 0° DEFLECTION.

1 M4.4 M4.4 DRUM DIFFUSER DETAIL
SCALE: NONE

GRAPHIC SCALE
1:50 0 1000 3000 5000mm

REVISIONS

SYM.	DESCRIPTION	DATE	APPROVED

DESIGNED & ENGINEERED BY: LANTDIV NAVAL FACILITIES ENGINEERING COMMAND

SEAL

APPROVED
ACTIVITY – SATISFACTORY TO
DATE
APPROVED
FOR EFD FOR COMMANDER NAVFAC
DATE

A/E	EFD
DESIGN	TLH
DRAWN	TLH
REVIEW	BDC
QC	
CHIEF ARCH./ ENGR.	
PROJECT MANAGER	
FIRE PROTECTION	
BRANCH MANAGER	
DESIGN DIRECTOR	

DEPARTMENT OF THE NAVY
NAVAL STATION
ATLANTIC DIVISION
NAVAL FACILITIES ENGINEERING COMMAND
NORFOLK, VIRGINIA
NAVAL STATION NORFOLK, VA
WATERFRONT ATHLETIC COMPLEX
GYM SECTION

CODE ID. NO. 80091	SIZE D
SCALE:	AS NOTED
EFD NO.	509091
STA PROJ. NO.	P-015
SPEC. NO.	05-00-8090
CONSTR. CONTR. NO.	N62470-B-00-9-8090
NAVFAC DRAWING NO.	4409091
SHEET 222 OF 284	
M4.4	

DRAWFORM REVISION 05 APRIL 99

FILENAME: 8090M404.DWG, PLOT SCALE: 1=1, SAVED ON 10/04/99 AT 07:52, XREFS: U:\PROJECTS\ACTIVE\8090 WATERFRONT ATHLETIC\DRAWINGS\402\8090S221.DWG

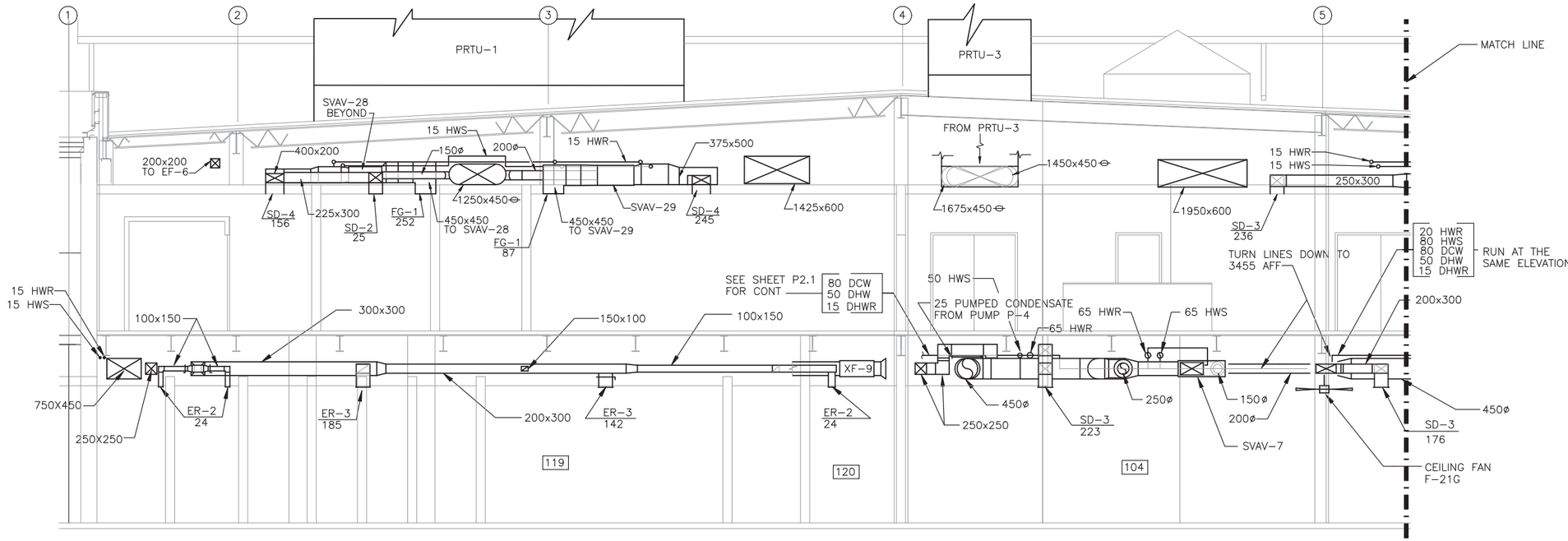

1 SECTION
M2.1, M2.4 M4.5 SCALE 1:50
M2.14, M2.44

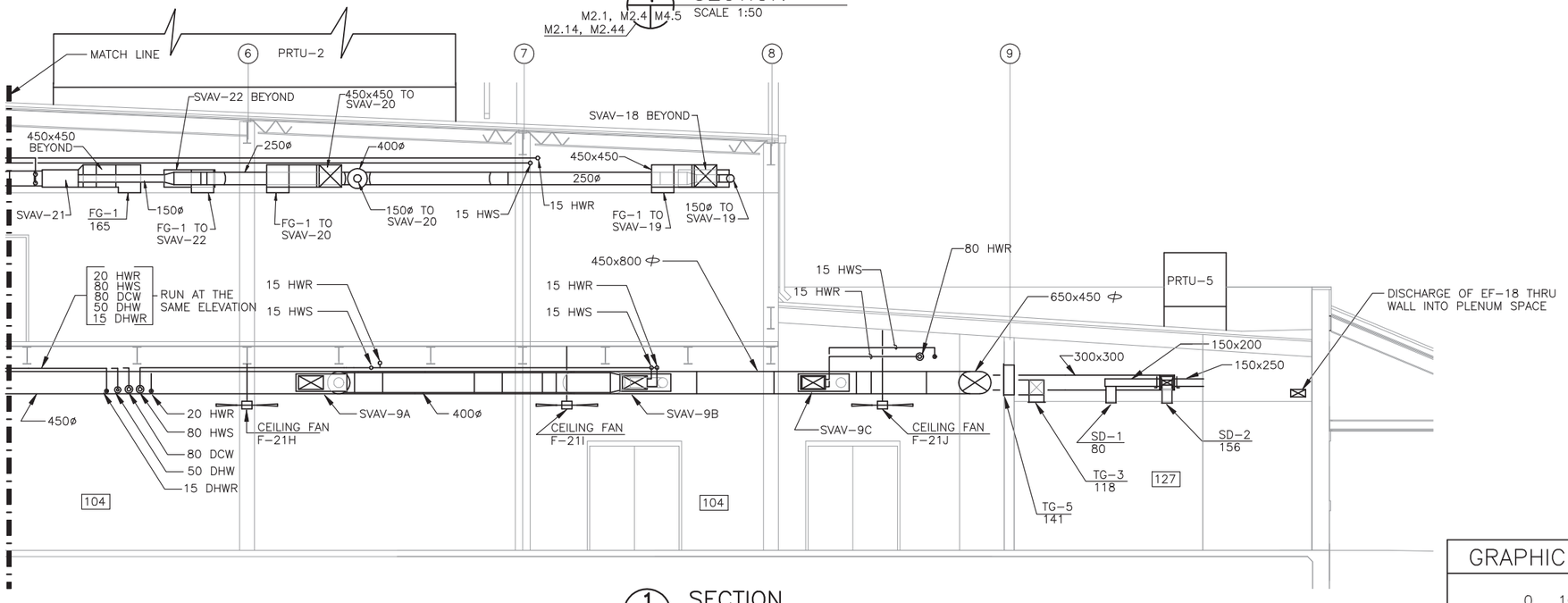

1 SECTION
M2.1, M2.4 M4.5 SCALE 1:50
M2.11, M2.41

GRAPHIC SCALE
1:50 0 1000 3000 5000mm

REVISIONS

NO.	DESCRIPTION	DATE	APPROVED

DESIGNED & ENGINEERED BY: LANTDIV NAVAL FACILITIES ENGINEERING COMMAND

SEAL

APPROVED
ACTIVITY – SATISFACTORY TO
DATE
APPROVED
FOR EFD FOR COMMANDER NAVFAC
DATE

A/E	EFD
DESIGN	JI/TH
DRAWN	JI/TH
REVIEW	BDC
QC	
CHIEF ARCH./ ENGR.	
PROJECT MANAGER	DWB
FIRE PROTECTION	
BRANCH MANAGER	
DESIGN DIRECTOR	

DEPARTMENT OF THE NAVY
NAVAL STATION
ATLANTIC DIVISION
NAVAL FACILITIES ENGINEERING COMMAND
NORFOLK, VIRGINIA

WATERFRONT ATHLETIC COMPLEX
SECTIONS

CODE ID. NO. 80091	SIZE D
SCALE:	AS NOTED
EFD NO.	509092
STA. PROJ. NO.	P-015
SPEC. NO.	05-00-8090
CONSTR. CONTR. NO.	N62470-00-B-8090
NAVFAC DRAWING NO.	4409092
SHEET	223 OF 284

M4.5

DRAWFORM REVISION 27 JULY 98

FILENAME: 8090M405.DWG, PLOT SCALE: 1=1, SAVED ON 10/04/99 AT 09:14, XREFS: U:\PROJECTS\ACTIVE\8090 WATERFRONT ATHLETIC\DRAWINGS\401\8090AX03.DWG, U:\PROJECTS\ACTIVE\8090 WATERFRONT ATHLETIC\DRAWINGS\401\8090AX02.DWG,

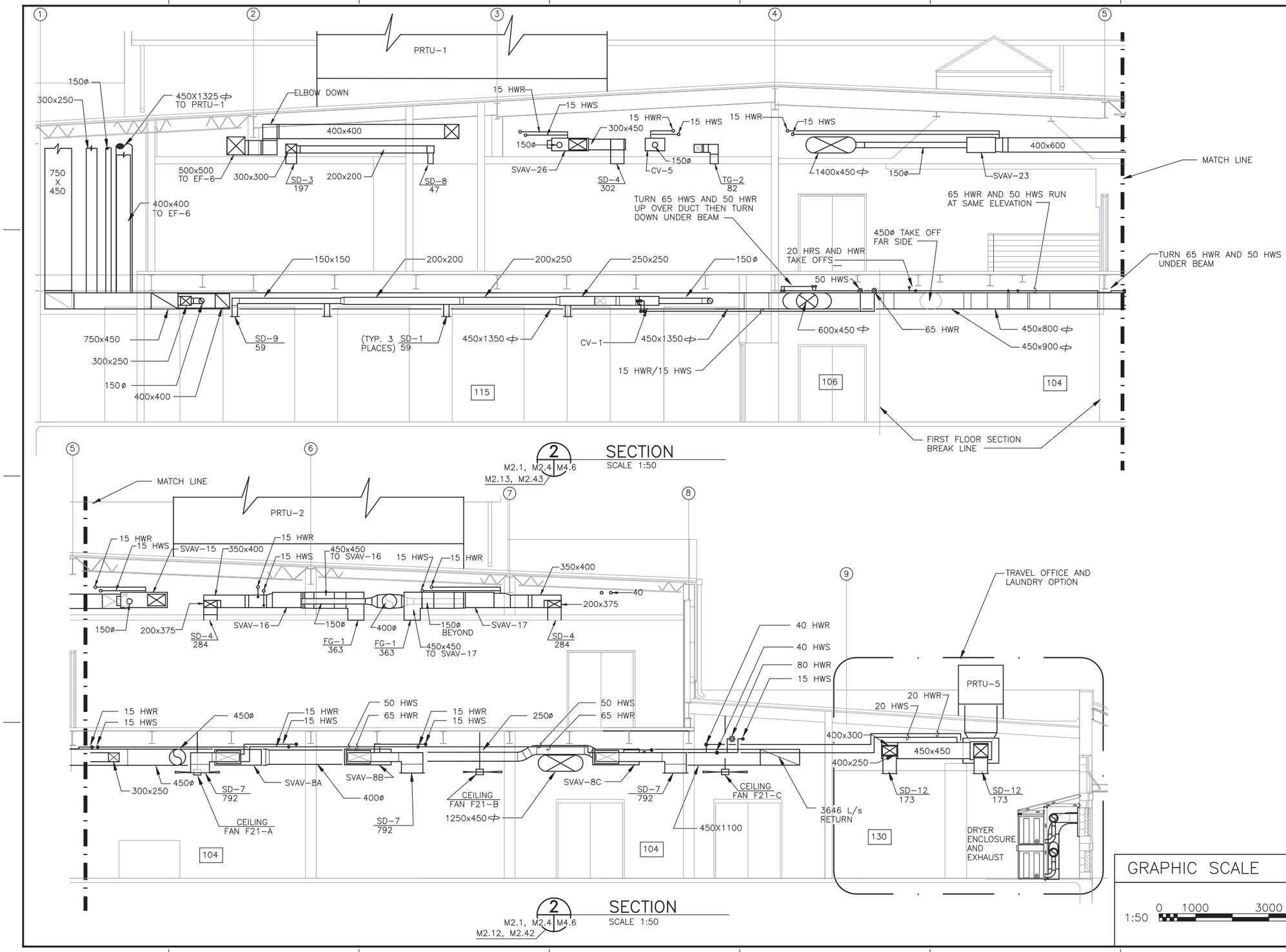

GRAPHIC SCALE

1:50 0 1000 3000 5000mm

REVISIONS

DESCRIPTION	DATE	APPROVED
STVL		

DESIGNED & ENGINEERED BY: LANTDIV NAVAL FACILITIES ENGINEERING COMMAND

SEAL

APPROVED

ACTIVITY – SATISFACTORY TO

DATE

APPROVED

FOR EFD FOR COMMANDER NAVFAC

DATE

A/E	EFD
DESIGN	JI/TH
DRAWN	JI/TH
REVIEW	BDC
QC	
CHIEF ARCH./ ENGR.	
PROJECT MANAGER	DWB
FIRE PROTECTION	
BRANCH MANAGER	
DESIGN DIRECTOR	

DEPARTMENT OF THE NAVY
NAVAL FACILITIES ENGINEERING COMMAND
ATLANTIC DIVISION
NAVAL STATION NORFOLK, VIRGINIA

WATERFRONT ATHLETIC COMPLEX

SECTIONS

CODE ID. NO. 80091	SIZE D
SCALE:	AS NOTED
EFD NO.	509093
STA. PROJ. NO.	P-015
SPEC. NO.	05-00-8090
CONSTR. CONTR. NO.	N62470-00-B-8090
NAVFAC DRAWING NO.	4409093
SHEET	224 OF 284

M4.6

DRAWFORM REVISION 27 JULY 98

FILENAME: 8090M406.DWG, PLOT SCALE: 1=1, SAVED ON 10/04/99 AT 09:21, XREFS: U:\PROJECTS\ACTIVE\8090 WATERFRONT ATHLETIC\DRAWINGS\401\8090AX03.DWG, U:\PROJECTS\ACTIVE\8090 WATERFRONT ATHLETIC\DRAWINGS\401\8090AX02.DWG,

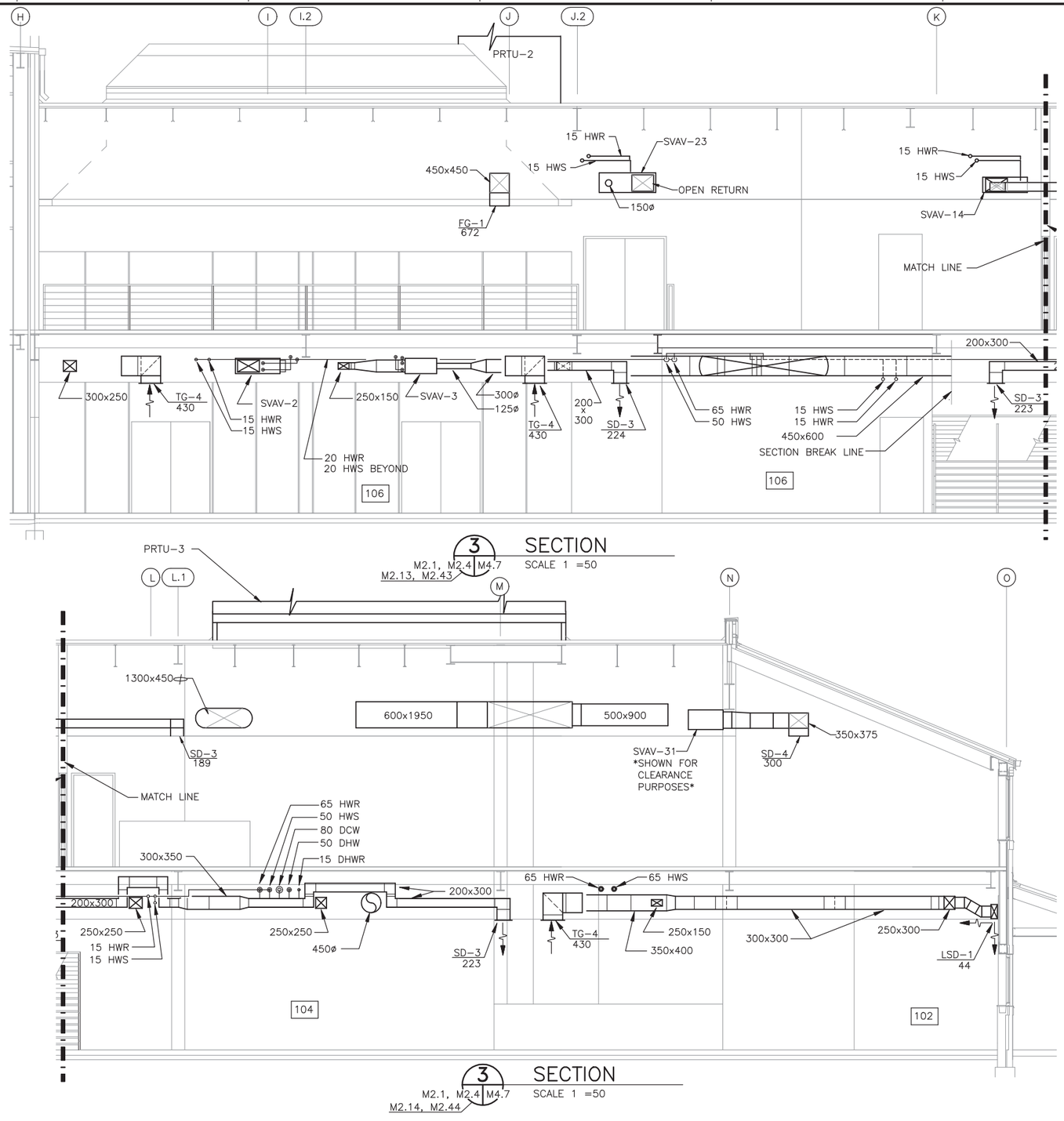

3 SECTION
M2.1, M2.4 M4.7 M2.13, M2.43 SCALE 1 =50

3 SECTION
M2.1, M2.4 M4.7 M2.14, M2.44 SCALE 1 =50

GRAPHIC SCALE

1:50 0 1000 3000 5000mm

REVISIONS

DESCRIPTION	DATE	APPROVED

DESIGNED & ENGINEERED BY: LANTDIV Naval Facilities Engineering Command

SEAL

APPROVED
ACTIVITY – SATISFACTORY TO
DATE
APPROVED
FOR EFD FOR COMMANDER NAVFAC
DATE

A/E	EFD
DESIGN	JI/TH
DRAWN	JI/TH
REVIEW	BDC
QC	
CHIEF ARCH./ ENGR.	
PROJECT MANAGER	DWB
FIRE PROTECTION	
BRANCH MANAGER	
DESIGN DIRECTOR	

DEPARTMENT OF THE NAVY
NAVAL STATION
ATLANTIC DIVISION
NAVAL FACILITIES ENGINEERING COMMAND
NAVAL STATION NORFOLK, VIRGINIA

WATERFRONT ATHLETIC COMPLEX

SECTIONS

CODE ID. NO. 80091	SIZE D
SCALE:	AS NOTED
EFD NO.	509094
STA. PROJ. NO.	P-015
SPEC. NO.	05-00-8090
CONSTR. CONTR. NO.	N62470-00-B-8090
NAVFAC DRAWING NO.	4409094
SHEET	225 OF 284

M4.7

DRAWFORM REVISION 27 JULY 98

FILENAME: 8090M407.DWG, PLOT SCALE: 1=1, SAVED ON 10/04/99 AT 09:51, XREFS: U:\PROJECTS\ACTIVE\8090 WATERFRONT ATHLETIC\DRAWINGS\401\8090AX02.DWG, U:\PROJECTS\ACTIVE\8090 WATERFRONT ATHLETIC\DRAWINGS\401\8090AX03.DWG,

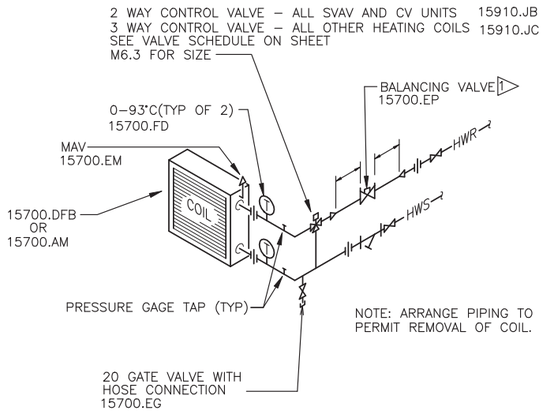

HOT WATER COIL PIPING DETAIL (A)

NO SCALE

M6.1 | M5.1; M6.2; M6.4

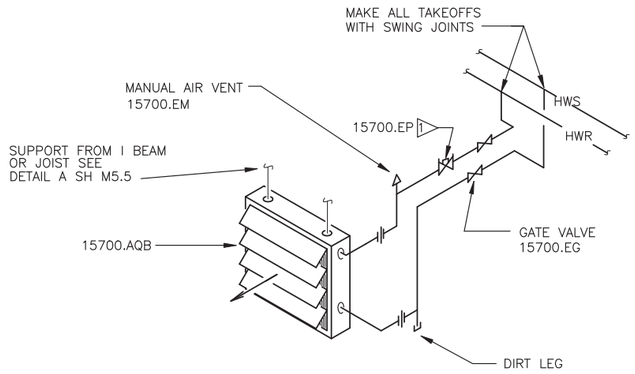

HOT WATER HORIZONTAL UNIT HEATER PIPING DETAIL (B)

NO SCALE

M6.2 | M5.1; M4.4

KEYNOTES

DIV 15 MECHANICAL

15400.ID	DOMESTIC WATER PIPING, HOSE BIBB
15700.AM	SERIES FAN POWERED VARIABLE VOLUME (VAV) TERMINALS
15700.AQB	UNIT HEATERS, HOT WATER
15700.AR	CONVECTORS
15700.BCA	END SUCTION WATER PUMPS, SUCTION DIFFUSER
15700.DFB	DUCT HEATERS, HOT WATER COILS
15700.EG	GATE VALVE
15700.EH	GLOBE AND ANGLE VALVES
15700.EI	CHECK VALVE
15700.EM	AIR VENTING VALVES
15700.EP	FLOW CONTROL BALANCING VALVES
15700.FA	STRAINERS
15700.FC	PRESSURE GAGES
15700.FD	THERMOMETERS
15700.FF	FLEXIBLE PIPE CONNECTORS
15700.FM	CHEMICAL FEED TANK
15700.ZPA	PRESSURE RELIEF VALVES, HOT WATER
15741.D	POOL HEAT EXCHANGER
15910.JB	TWO–WAY VALVES
15910.JC	THREE–WAY VALVES

NOTES THIS SHEET

1. THE FLOW CONTROL BALANCING VALVES SHALL BE INSTALLED BY THE CONTRACTOR IN CONFORMANCE WITH VALVE MFGR'S RECOMMENDED SPACING UP/DOWN STREAM FROM PIPE CHANGES IN DIRECTION AND/OR OTHER VALVES/COMPONENTS IN THE PIPING SYSTEM. SIZE BALANCING VALVE PER THE REQ'D FLOW AND MFGR'S RECOMMENDATIONS.

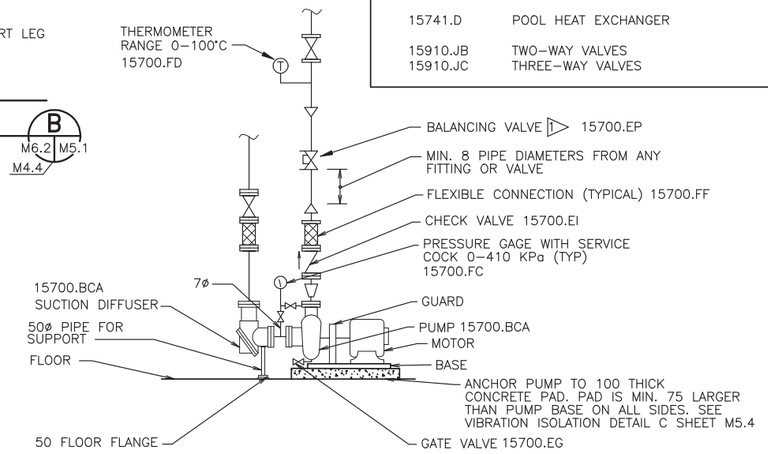

BASE MOUNTED CENTRIFUGAL PUMP DETAIL (D)

NO SCALE

M6.1 | M5.1

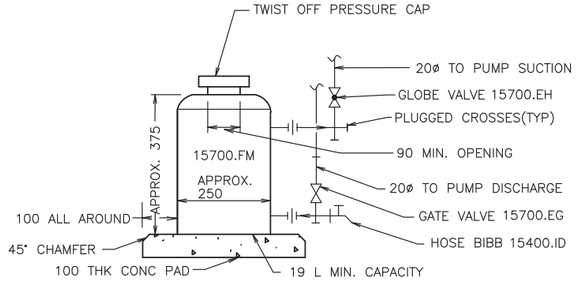

CHEMICAL FEED TANK DETAIL (E)

NO SCALE

M6.4 | M5.1; M3.1

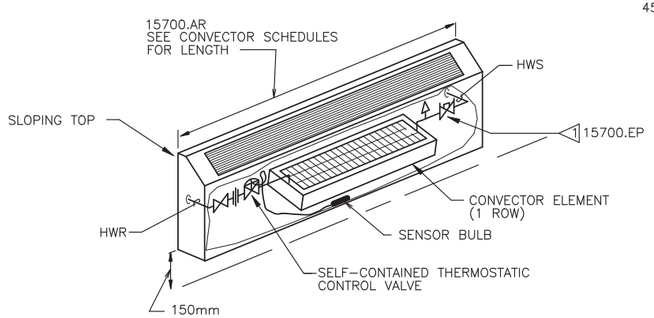

CONVECTOR DETAIL (C)

NO SCALE

M6.1 | M5.1

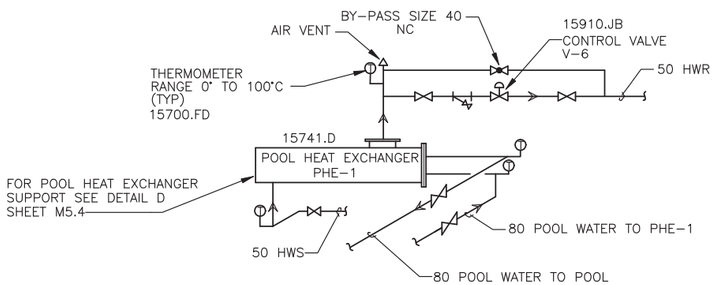

POOL HEAT EXCHANGER DETAIL (F)

NO SCALE

M2.32 | M5.1; M6.4

REVISIONS

DESCRIPTION	DATE	APPROVED

DESIGNED & ENGINEERED BY: LANTDIV Naval Facilities Engineering Command

SEAL

APPROVED

ACTIVITY – SATISFACTORY TO

DATE

APPROVED

FOR EFD FOR COMMANDER NAVFAC

DATE

A/E	EFD
DESIGN	JI/TH
DRAWN	JTI
REVIEW	BDC
QC	
CHIEF ARCH./ ENGR.	
PROJECT MANAGER	DWB
FIRE PROTECTION	
BRANCH MANAGER	
DESIGN DIRECTOR	

DEPARTMENT OF THE NAVY
NAVAL FACILITIES ENGINEERING COMMAND
ATLANTIC DIVISION
NAVAL STATION
NORFOLK, VIRGINIA

WATERFRONT ATHLETIC COMPLEX

DETAILS

CODE ID. NO. 80091	SIZE D
SCALE: NONE	
EFD NO. 509095	
STA. PROJ. NO. P–015	
SPEC. NO. 05–00–8090	
CONSTR. CONTR. NO. N62470–B–00–8090	
NAVFAC DRAWING NO. 4409095	
SHEET 226 OF 284	

M5.1

FILENAME: 8090M501.DWG, PLOT SCALE: 1" = 1', SAVED ON 10/04/99 AT 08:08, XREFS: NONE

DRAWFORM REVISION 27 JULY 98

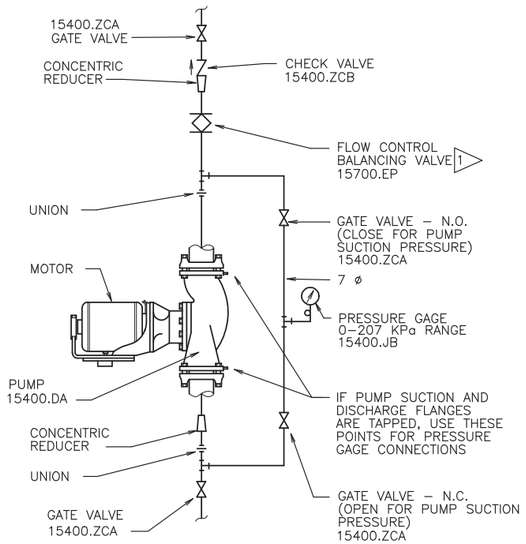

INLINE CENTRIFUGAL PUMP DETAIL

A — M6.1 | M5.2

NO SCALE

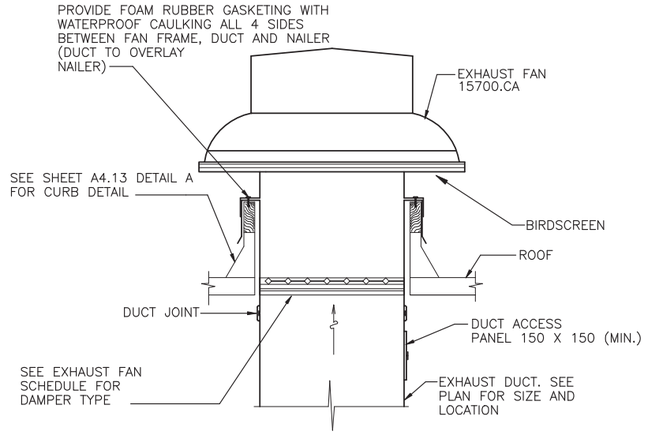

EXHAUST FAN DETAIL

C — M6.2 | M5.2

NO SCALE

KEYNOTES

DIV 15 MECHANICAL

15400.DA	PUMPS, INLINE WATER
15400.JB	PIPING ACCESSORIES, PRESSURE GAGES
15400.ZCA	DOMESTIC WATER PIPING, WATER VALVES, GATE VALVES
15400.ZCB	DOMESTIC WATER PIPING, WATER VALVES, CHECK VALVES
15700.CA	CENTRIFUGAL FANS
15700.DBA	DUCTS OF PRESSURE CLASSES LESS THAN 746 Pa (GAGE) 3 INCH WG, ACOUSTICAL DUCT LINING
15700.DC	DIFFUSERS, REGISTERS AND GRILLES
15700.EP	FLOW CONTROL BALANCING VALVES
15700.ZQ	FIRE DAMPERS

NOTES THIS SHEET

1. THE FLOW CONTROL BALANCING VALVES SHALL BE INSTALLED BY THE CONTRACTOR IN CONFORMANCE WITH VALVE MFGR'S RECOMMENDED SPACING UP/DOWNSTREAM FORM PIPE CHANGES IN DIRECTION AND/OR OTHER VALVES/COMPONENTS IN THE PIPING. SIZE BALANCING VALVE PER THE REQ'D FLOW AND MFGR'S RECOMMENDATIONS.

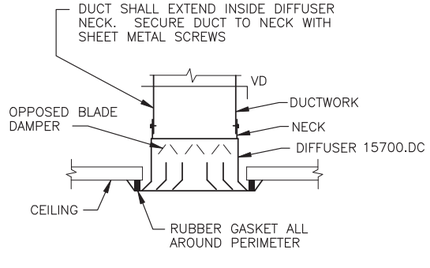

(TYP. FOR ALL DIFFUSER/REGISTERS)

DUCT TO DIFFUSER/REGISTER CONNECTION DETAIL

B — M6.3 | M5.2

NO SCALE

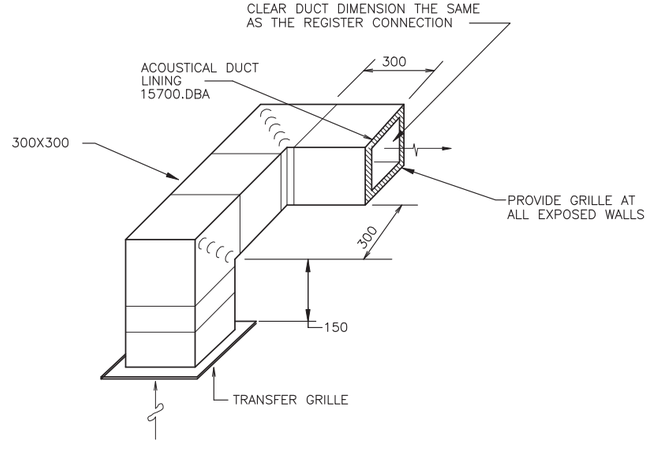

TRANSFER DUCT DETAIL

D — M6.3 | M5.2

NO SCALE

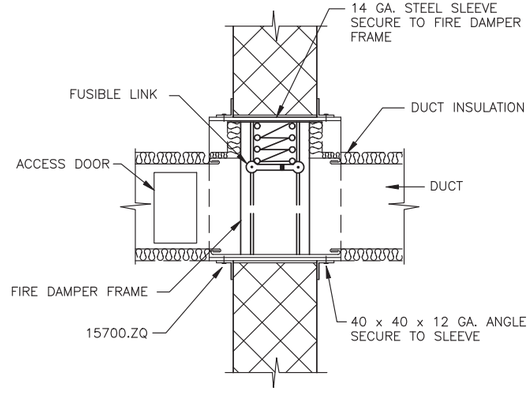

NOTE: VERTICAL FIRE DAMPER SIMILAR

HORIZONTAL AIR FLOW FIRE DAMPER DETAIL

E — M0.1 | M5.2

NO SCALE

REVISIONS

NO.	DESCRIPTION	DATE	APPROVED

DESIGNED & ENGINEERED BY: LANTDIV Naval Facilities Engineering Command

SEAL

APPROVED

ACTIVITY – SATISFACTORY TO

DATE

APPROVED

FOR EFD FOR COMMANDER NAVFAC

DATE

	A/E	EFD
DESIGN		JI/TH
DRAWN		JTI
REVIEW		BDC
QC		
CHIEF	ARCH./ ENGR.	
PROJECT MANAGER		DWB
FIRE PROTECTION		
BRANCH MANAGER		
DESIGN DIRECTOR		

DEPARTMENT OF THE NAVY — NAVAL FACILITIES ENGINEERING COMMAND
ATLANTIC DIVISION — NAVAL STATION — NORFOLK, VIRGINIA

WATERFRONT ATHLETIC COMPLEX — NAVAL STATION NORFOLK, VIRGINIA

DETAILS

CODE ID. NO. 80091	SIZE D
SCALE:	NONE
EFD NO.	509096
STA. PROJ. NO.	P–015
SPEC. NO.	05–00–8090
CONSTR. CONTR. NO.	N62470–B–00–8090
NAVFAC DRAWING NO.	4409096
SHEET	227 OF 284

M5.2

DRAWFORM REVISION 27 JULY 98

FILENAME: 8090M502.DWG, PLOT SCALE: 1" = 1', SAVED ON 10/04/99 AT 08:07, XREFS: NONE

8 7 6 5 4 3 2 1 — D C B A

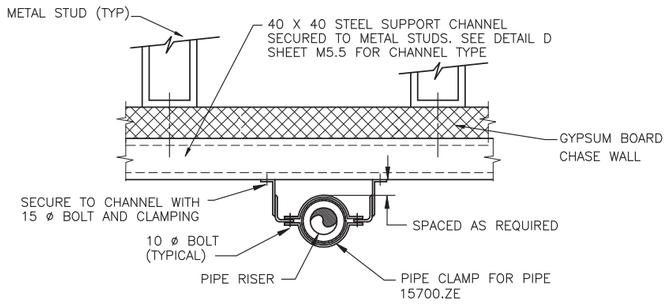

RISER SUPPORT DETAIL (A)

NO SCALE

M0.1 | M5.3

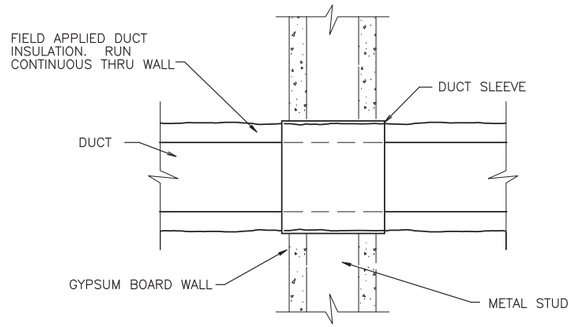

DUCT PENETRATION DETAIL (TYPICAL) (D)

NO SCALE

M0.1 | M5.3

KEYNOTES

DIV 15 MECHANICAL

15080.AA	INSULATION, PIPING
15700.FE	PIPE SLEEVES
15700.ZE	STANDARD RISER, SP-69 TYPE 8

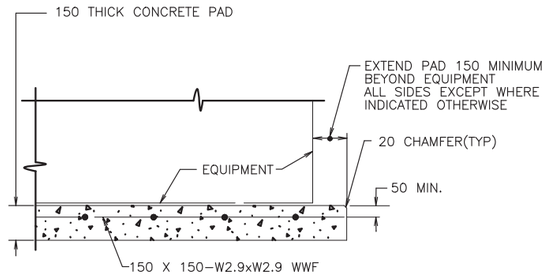

EQUIPMENT PAD DETAIL (B)

NO SCALE

M2.3 | M5.3

M4.3

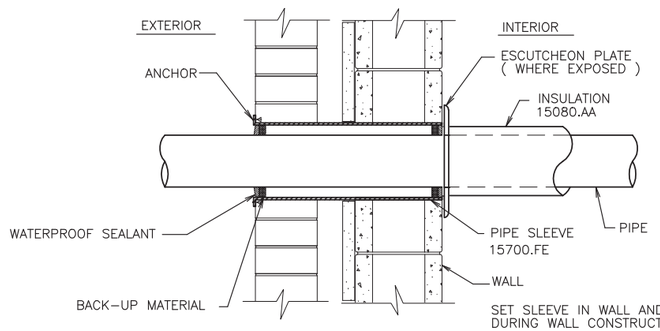

PIPE SLEEVE THRU EXTERIOR WALL DETAIL (E)

NO SCALE

M0.1 | M5.3

M2.3

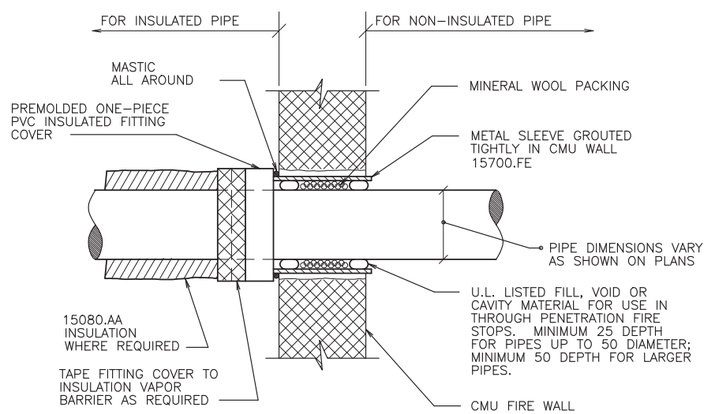

NOTES:

1 DETAIL ILLUSTRATES PIPE INSULATION ON ONE SIDE OF FIRE RATED WALL. WHERE PIPE IS REQUIRED TO BE INSULATED ON BOTH SIDES, THE INSULATION END TREATMENT SHALL BE DUPLICATED ON BOTH SIDES.

2 DETAIL TYPICAL FOR PIPE THRU FLOOR

PIPE THRU FIRE WALL PENETRATION DETAIL (C)

NO SCALE

M2.3 M0.1 | M5.3

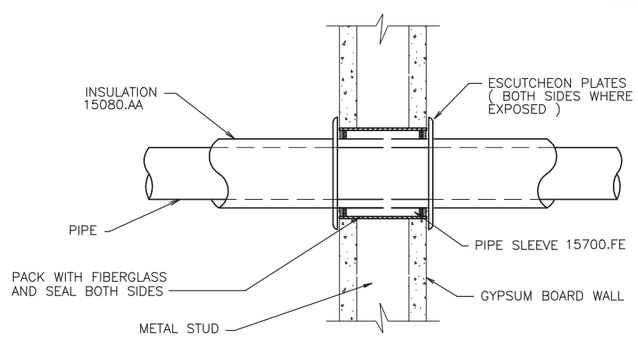

PIPE SLEEVE THRU INTERIOR WALL DETAIL (F)

NO SCALE

M0.1 | M5.3

REVISIONS

SYM.	DESCRIPTION	DATE	APPROVED

DESIGNED & ENGINEERED BY: LANTDIV NAVAL FACILITIES ENGINEERING COMMAND

SEAL

APPROVED

ACTIVITY - SATISFACTORY TO

DATE

APPROVED

FOR EFD FOR COMMANDER NAVFAC

DATE

A/E	EFD
DESIGN	JI/TH
DRAWN	JTI
REVIEW	BDC
QC	
CHIEF	ARCH./ ENGR.
PROJECT MANAGER	DWB
FIRE PROTECTION	
BRANCH MANAGER	
DESIGN DIRECTOR	

DEPARTMENT OF THE NAVY — NAVAL FACILITIES ENGINEERING COMMAND

NAVAL STATION — ATLANTIC DIVISION — NORFOLK, VIRGINIA

WATERFRONT ATHLETIC COMPLEX

NORFOLK, VIRGINIA

DETAILS

CODE ID. NO. 80091	SIZE D
SCALE:	
EFD NO.	509097
STA. PROJ. NO.	P-015
SPEC. NO.	05-00-8090
CONSTR. CONTR. NO.	N62470-B-00-8090
NAVFAC DRAWING NO.	4409097
SHEET	228 OF 284

M5.3

8 | 7 | 6 | 5 | 4 | 3 | 2 | 1 DRAWFORM REVISION 27 JULY 98

D C B A

FILENAME: 8090M503.DWG, PLOT SCALE: 1=1, SAVED ON 10/04/99 AT 08:15, XREFS: NONE

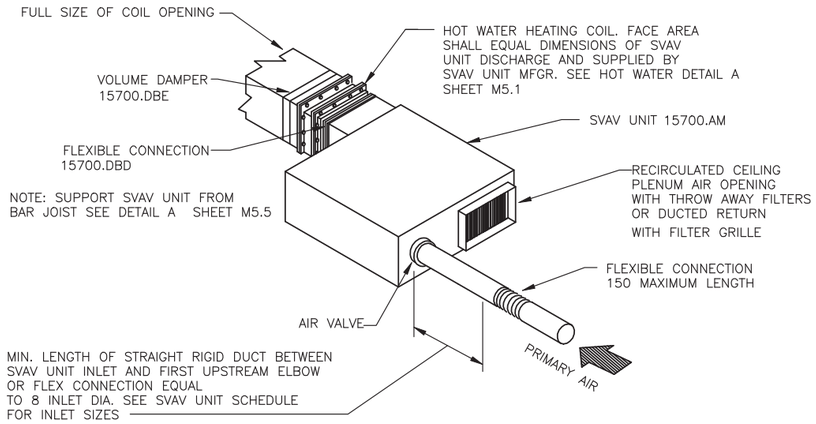

SERIES VARIABLE VOLUME UNIT (A)

NO SCALE

M6.2 | M5.4

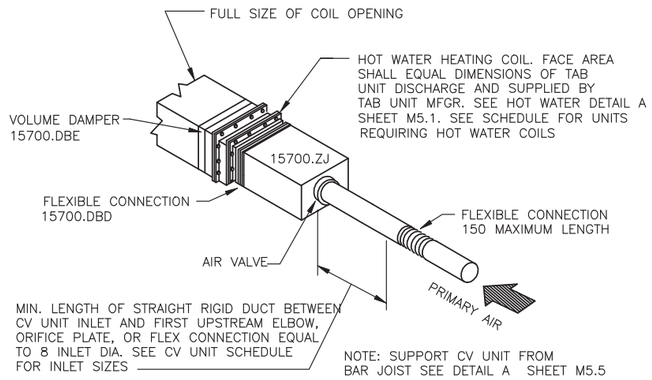

CONSTANT VOLUME TERMINAL UNIT (B)

NO SCALE

M6.2 | M5.4

KEYNOTES

DIV 15 MECHANICAL

15700.AM	SERIES FAN POWERED VARIABLE VOLUME (VAV) TERMINALS
15700.AT	HOT WATER CONVERTERS
15700.DBD	DUCTS OF PRESSURE CLASSES LESS THAN 746 Pa (GAGE) 3 INCH WG, FLEXIBLE DUCT CONNECTORS
15700.DBE	DUCTS OF PRESSURE CLASSES LESS THAN 746 Pa (GAGE) 3 INCH WG, DAMPERS
15700.ZH	PIPE HANGERS AND SUPPORTS
15700.ZJ	CONSTANT AIR VOLUME UNIT
15700.ZR	VIBRATION ISOLATOR
15741.D	POOL HEAT EXCHANGER

VIBRATION ISOLATOR SCHEDULE

EQUIPMENT ISOLATED	ISOLATOR TYPE		REMARKS
DESCRIPTION	DESCRIPTION	MARK TYPE	
ALL SUSPENDED EQUIPMENT	SINGLE DEFLECTION NEOPRENE-IN-SHEAR HANGER	VI-4	(1) (2)
BASE MOUNTED PUMPS	SINGLE LAYER SHEAR FLEX PAD	VI-5	(1) (3)

(1) LOAD RANGE OF ISOLATOR SHALL BE SUITABLE TO THE WEIGHTS OF APPROVED EQUIPMENT SELECTION
(2) RECTANGULAR STEEL HOUSING INCORPORATING NEOPRENE-IN-SHEAR ELEMENT
(3) LOAD-DISTRIBUTING STEEL PLATE CEMENTED TO SHEAR FLEX PAD

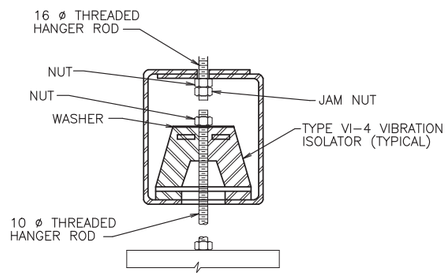

TYPE VI-4

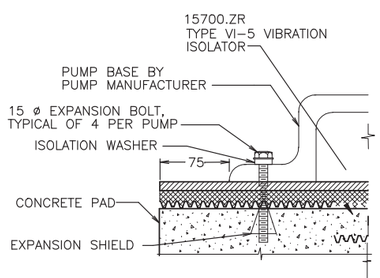

TYPE VI-5

VIBRATION ISOLATOR DETAILS (C)

NO SCALE

M5.1 | M5.4
M5.7
M5.5

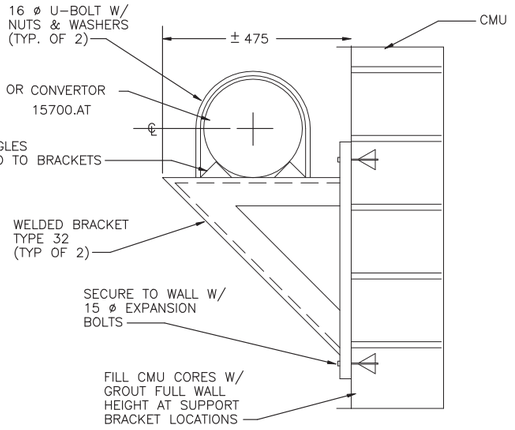

CONVERTOR SUPPORT DETAIL (D)

NO SCALE

M5.6 | M5.4

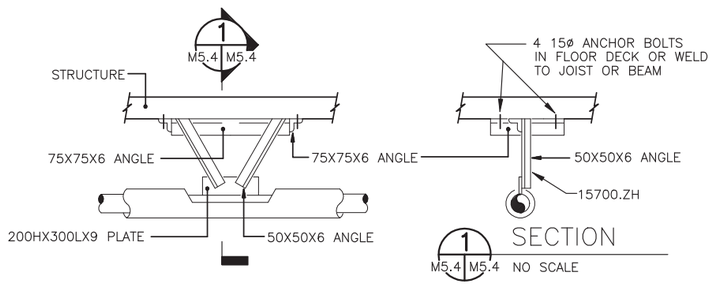

PIPE ANCHOR DETAIL (E)

NO SCALE

M0.1 | M5.4

REVISIONS

DESCRIPTION	DATE	APPROVED
STAL		

DESIGNED & ENGINEERED BY: LANTDIV NAVAL FACILITIES ENGINEERING COMMAND

SEAL

APPROVED
ACTIVITY – SATISFACTORY TO
DATE
APPROVED
FOR EFD FOR COMMANDER NAVFAC
DATE

A/E	EFD
DESIGN	JI/TH
DRAWN	JTI
REVIEW	BDC
QC	
CHIEF	ARCH./ ENGR.
PROJECT MANAGER	DWB
FIRE PROTECTION	
BRANCH MANAGER	
DESIGN DIRECTOR	

NAVAL FACILITIES ENGINEERING COMMAND
ATLANTIC DIVISION
NORFOLK, VIRGINIA
DEPARTMENT OF THE NAVY
NAVAL STATION
NORFOLK, VIRGINIA

WATERFRONT ATHLETIC COMPLEX

DETAILS

CODE ID. NO. 80091	SIZE D
SCALE: NONE	
EFD NO. 509098	
STA PROJ. NO. P-015	
SPEC. NO. 05-00-8090	
CONSTR. CONTR. NO. N62470-B-B-00-8090	
NAVFAC DRAWING NO. 4409098	
SHEET 229 OF 284	

M5.4

DRAWFORM REVISION 27 JULY 98

FILENAME: 8090M504.DWG, PLOT SCALE: 1" = 1', SAVED ON 10/04/99 AT 08:28, XREFS: NONE

D C B A

8 7 6 5 4 3 2 1

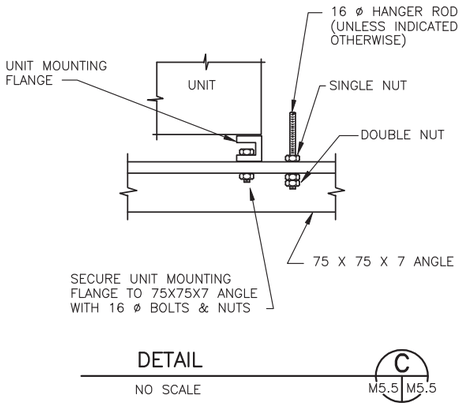

DETAIL C
NO SCALE
M5.5 | M5.5

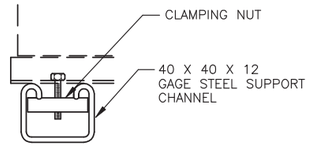

UNIT MOUNTING FLANGE BOLT
FURNISHED WITH EQUIPMENT

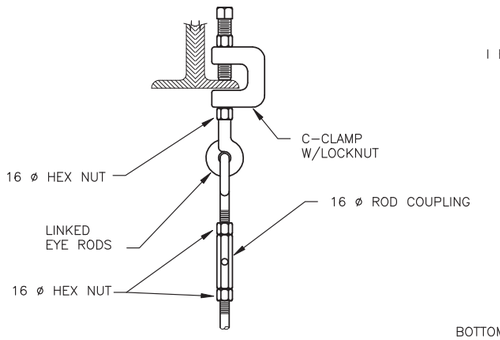

I BEAM

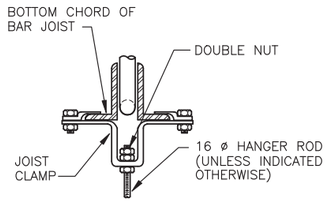

JOIST

NOTE: USE DETAIL FOR PIPE SUPPORT 15700.ZH

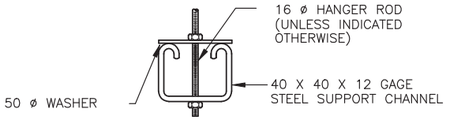

DETAIL B
NO SCALE
M5.5 | M5.5

UNIT MOUNTING FLANGE BOLT NOT
FURNISHED WITH EQUIPMENT

DETAIL D
NO SCALE
M5.5 | M5.5

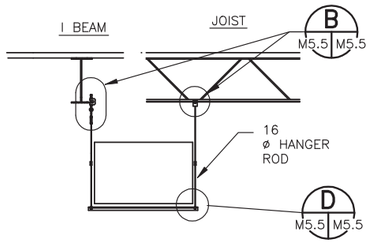

JOIST OR I BEAM CENTERLINE
PARALLEL TO UNIT

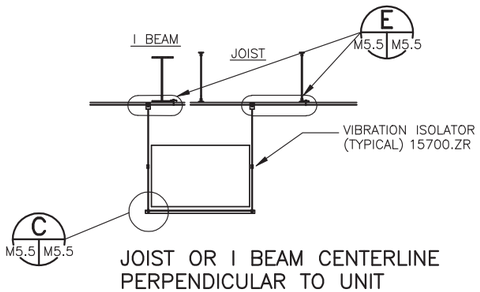

JOIST OR I BEAM CENTERLINE
PERPENDICULAR TO UNIT

NOTE: SEE DETAIL C SHEET M5.4 FOR VIBRATION
ISOLATION DETAIL FOR SUSPENDED EQUIPMENT

EQUIPMENT SUPPORT DETAILS
NO SCALE
A
M5.5 | M5.5
M5.7

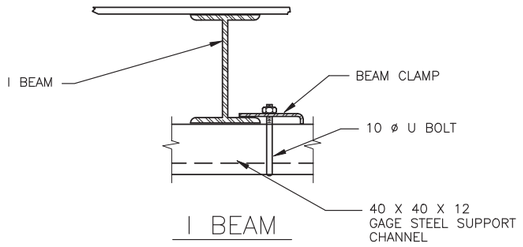

I BEAM

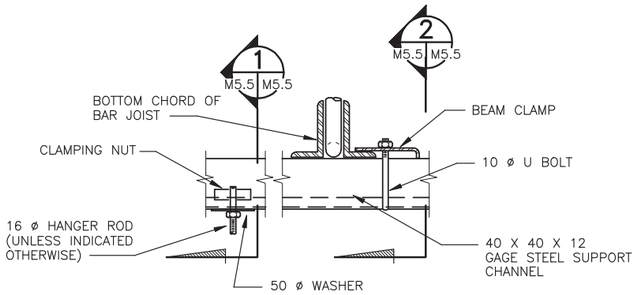

JOIST

DETAIL E
NO SCALE
M5.5 | M5.5

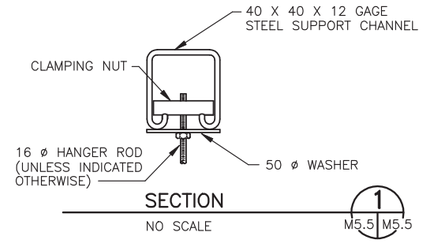

SECTION 1
NO SCALE
M5.5 | M5.5

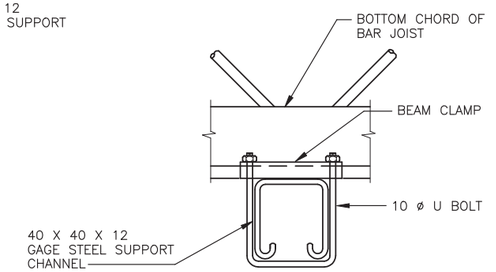

SECTION 2
NO SCALE
M5.5 | M5.5

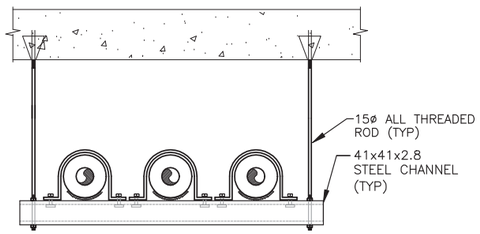

PIPE/DUCT SUPPORT DETAIL

KEYNOTES

DIV 15 MECHANICAL

15700.ZH	PIPE HANGERS AND SUPPORTS
15700.ZR	VIBRATION ISOLATOR

REVISIONS

STM	DESCRIPTION	DATE	APPROVED

DESIGNED & ENGINEERED BY: LANTDIV Naval Facilities Engineering Command

SEAL

APPROVED
ACTIVITY – SATISFACTORY TO
DATE
APPROVED
FOR EFD FOR COMMANDER NAVFAC
DATE

A/E		EFD
DESIGN		JI/TH
DRAWN		JTI
REVIEW		BDC
QC		
CHIEF		ARCH./ ENGR.
PROJECT MANAGER		DWB
FIRE PROTECTION		
BRANCH MANAGER		
DESIGN DIRECTOR		

NAVAL FACILITIES ENGINEERING COMMAND
DEPARTMENT OF THE NAVY
ATLANTIC DIVISION
NAVAL STATION
NORFOLK, VIRGINIA
NAVAL STATION
NORFOLK, VIRGINIA
WATERFRONT ATHLETIC COMPLEX
DETAILS

CODE ID. NO. 80091	SIZE D
SCALE: NONE	
EFD NO. 509099	
STA. PROJ. NO. P–015	
SPEC. NO. 05–00–8090	
CONSTR. CONTR. NO. N62470–B–00–8090	
NAVFAC DRAWING NO. 4409099	
SHEET 230 OF 284	

M5.5

DRAWFORM REVISION 27 JULY 98

FILENAME: 8090M505.DWG, PLOT SCALE: 1" = 1', SAVED ON 10/04/99 AT 08:41, XREFS: NONE

8 | 7 | 6 | 5 | 4 | 3 | 2 | 1

D C B A

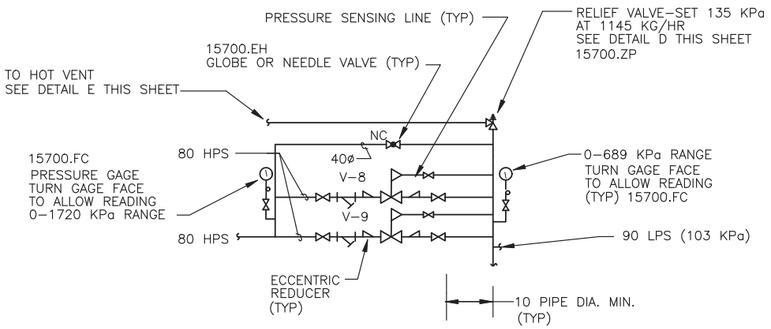

STEAM PRESSURE REDUCING STATION 1 (A)

NO SCALE

M3.1 M5.6 M4.2

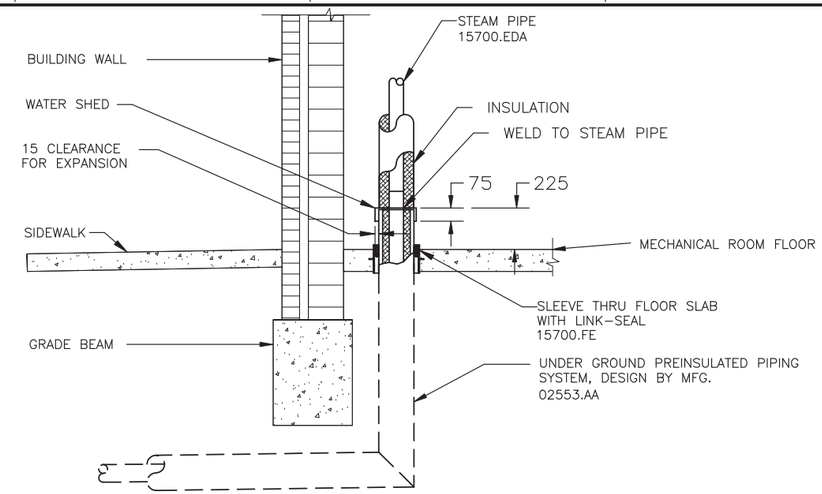

KEYNOTES

DIV 02 SITEWORK

02553.AA	PIPING, STEAM

DIV 15 MECHANICAL

15700.AT	HOT WATER CONVERTERS
15700.EDA	STEEL PIPING SYSTEMS, STEAM
15700.EH	GLOBE AND ANGLE VALVES
15700.FA	STRAINERS
15700.FB	TRAPS
15700.FC	PRESSURE GAGES
15700.FD	THERMOMETERS
15700.FE	PIPE SLEEVES
15700.ZP	PRESSURE RELIEF VALVES
15700.ZPA	PRESSURE RELIEF VALVES, HOT WATER

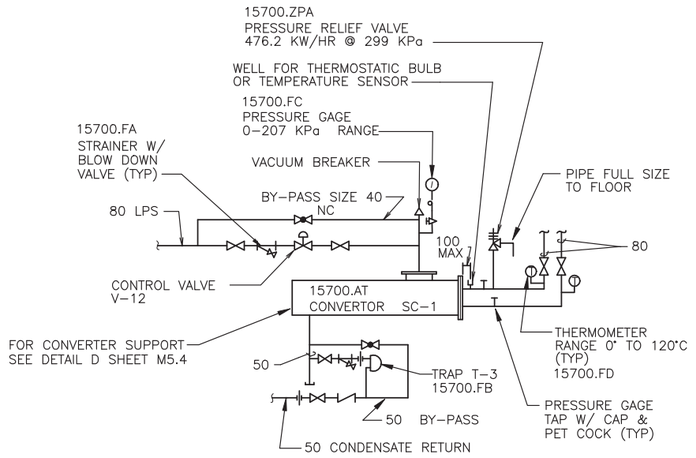

CONVERTOR PIPING DETAIL (C)

NO SCALE

M3.1 M5.6 M4.1 M6.4

STEAM PIPE BUILDING ENTRY DETAIL (B)

NO SCALE

M4.1 M5.6 M8.3

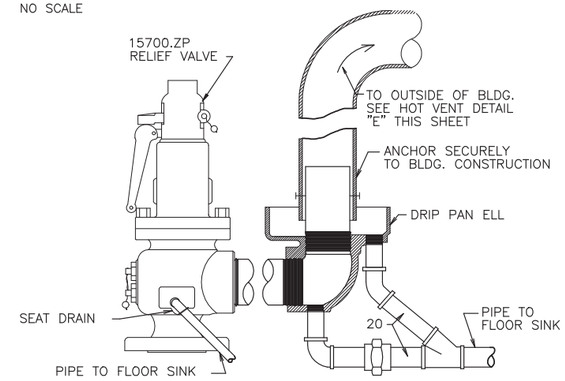

STEAM RELIEF VALVE DRIP PAN ELL DETAIL (D)

NO SCALE

M5.6 M5.6

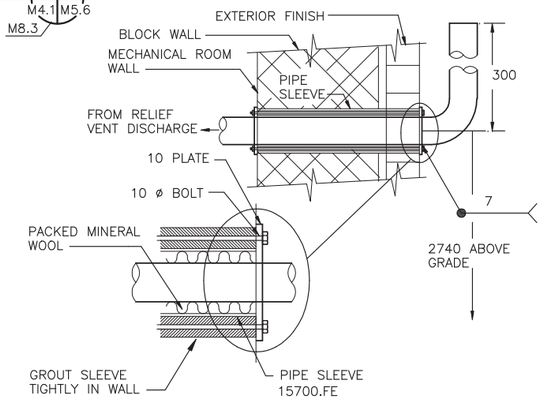

HOT VENT DETAIL (E)

NO SCALE

M5.6 M5.6

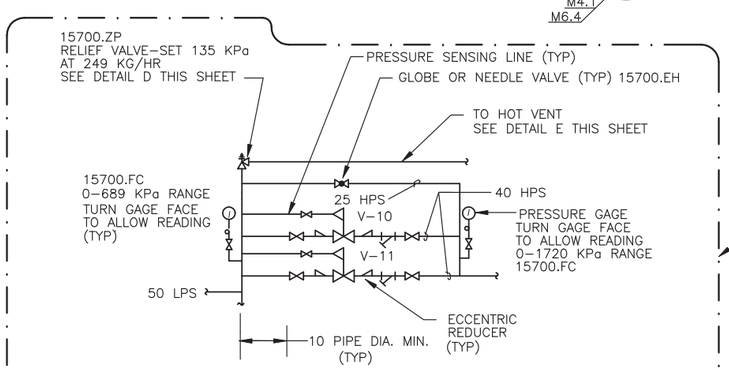

STEAM PRESSURE REDUCING STATION 2 (F)

NO SCALE

M3.1 M5.6 M4.1 M4.2

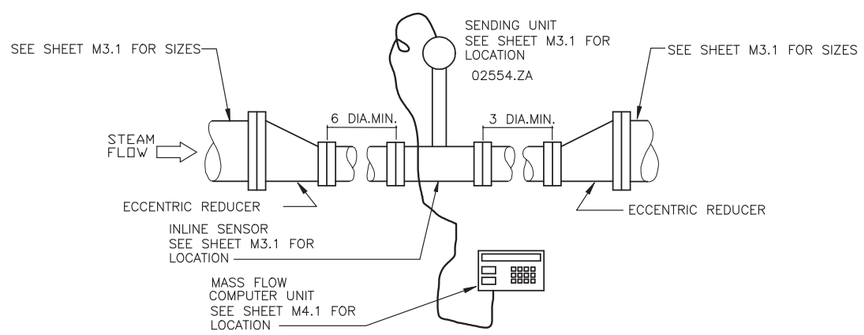

STEAM METER DETAIL (G)

NO SCALE

M3.1 M5.6 M4.1

REVISIONS

DESCRIPTION	DATE	APPROVED
STM.		

DESIGNED & ENGINEERED BY: LANTDIV Naval Facilities Engineering Command

APPROVED
ACTIVITY – SATISFACTORY TO
DATE
APPROVED
FOR EFD FOR COMMANDER NAVFAC
DATE

A/E	EFD
DESIGN	JI/TH
DRAWN	JTI
REVIEW	BDC
QC	
CHIEF	ARCH./ ENGR.
PROJECT MANAGER	DWB
FIRE PROTECTION	
BRANCH MANAGER	
DESIGN DIRECTOR	

DEPARTMENT OF THE NAVY
NAVAL FACILITIES ENGINEERING COMMAND
ATLANTIC DIVISION
NAVAL STATION
NORFOLK, VIRGINIA
NORFOLK, VIRGINIA

WATERFRONT ATHLETIC COMPLEX

DETAILS

CODE ID. NO. 80091	SIZE D
SCALE:	NONE
EFD NO.	509100
STA. PROJ. NO.	P–015
SPEC. NO.	05–00–8090
CONSTR. CONTR. NO.	N62470–B–00–8090
NAVFAC DRAWING NO.	4409100
SHEET	231 OF 284

M5.6

FILENAME: 8090M506.DWG, PLOT SCALE: 1" = 1', SAVED ON 10/06/99 AT 13:58, XREFS: NONE

DRAWFORM REVISION 27 JULY 98

D C B A

8 7 6 5 4 3 2 1

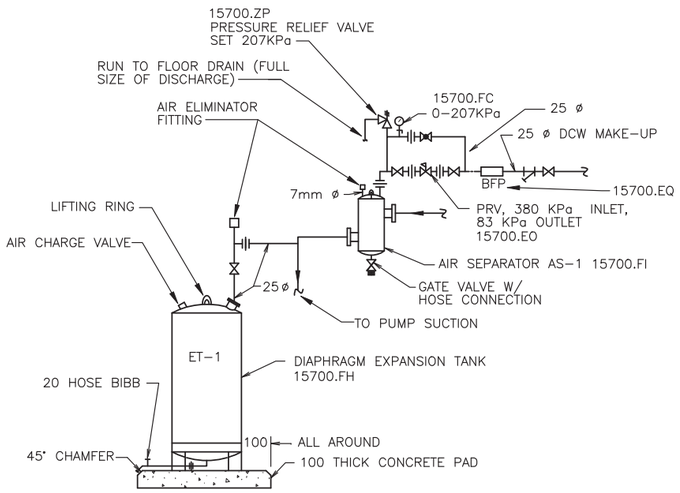

MAKE–UP WATER/AIR EXPANSION TANK DETAIL (A)

NO SCALE

M4.1 M5.7, M6.2, M6.3

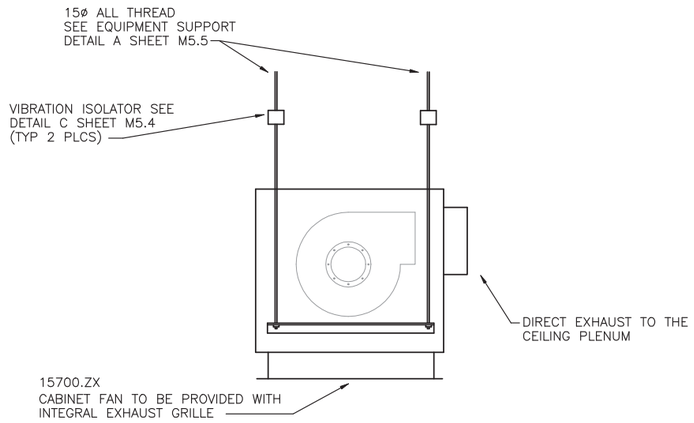

CABINET FAN DETAIL (B)

NO SCALE

M6.2 M5.7

KEYNOTES

DIV 15 MECHANICAL

15400.DC	PUMPS, SUBMERSIBLE SUMP
15700.CC	IN–LINE CENTRIFUGAL FANS
15700.DBD	DUCTS OF PRESSURE CLASSES LESS THAN 746 Pa (GAGE) 3 INCH WG, FLEXIBLE DUCT CONNECTORS
15700.EO	WATER PRESSURE REDUCING VALVES
15700.EQ	BACKFLOW PREVENTION ASSEMBLIES
15700.FC	PRESSURE GAGES
15700.FH	EXPANSION TANKS
15700.FI	AIR SEPARATORS
15700.ZP	PRESSURE RELIEF VALVES
15700.ZR	VIBRATION ISOLATOR
15700.ZX	CABINET FAN

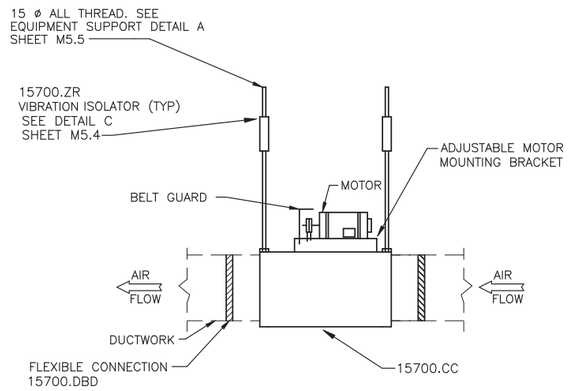

CENTRIFUGAL IN–LINE FAN DETAIL (C)

NO SCALE

M6.2 M5.7

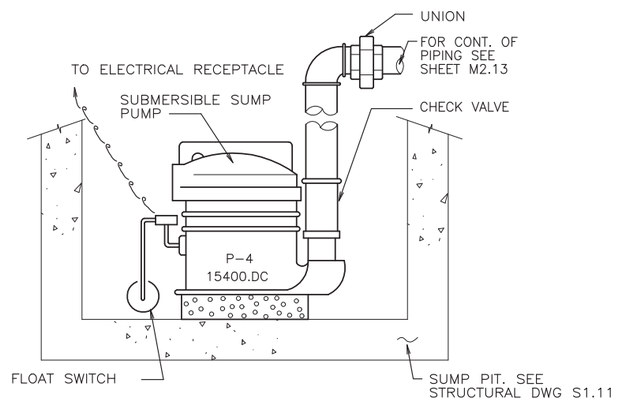

SUMP PUMP DETAIL (D)

NO SCALE

M6.1 M5.7

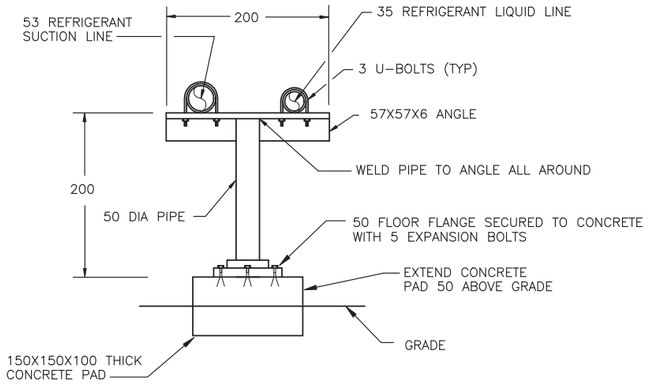

NOTE: DETAIL TYPICAL FOR ONE LINE SUPPORT

PIPE SUPPORT DETAIL (E)

NO SCALE

M2.3 M5.7

REVISIONS

DESCRIPTION	DATE	APPROVED

DESIGNED & ENGINEERED BY: LANTDIV Naval Facilities Engineering Command

SEAL

APPROVED

ACTIVITY – SATISFACTORY TO

DATE

APPROVED

FOR EFD FOR COMMANDER NAVFAC

DATE

A/E	EFD
DESIGN	JI/TH
DRAWN	JTI
REVIEW	BDC
QC	
CHIEF ARCH./ ENGR.	
PROJECT MANAGER	DWB
FIRE PROTECTION	
BRANCH MANAGER	
DESIGN DIRECTOR	

DEPARTMENT OF THE NAVY
NAVAL STATION
ATLANTIC DIVISION
NAVAL FACILITIES ENGINEERING COMMAND
NORFOLK, VIRGINIA

NAVAL STATION NORFOLK, VIRGINIA
WATERFRONT ATHLETIC COMPLEX
DETAILS

CODE ID. NO. 80091	SIZE D
SCALE: NONE	
EFD NO. 509101	
STA. PROJ. NO. P–015	
SPEC. NO. 05–00–8090	
CONSTR. CONTR. NO. N62470–B–00–8090	
NAVFAC DRAWING NO. 4409101	
SHEET 232 OF 284	
M5.7	

FILENAME: 8090M507.DWG, PLOT SCALE: 1" = 1', SAVED ON 10/04/99 AT 08:52, XREFS: NONE

DRAWFORM REVISION 27 JULY 98

8 7 6 5 4 3 2 1

D C B A

PACKAGED VAV ROOF TOP UNIT SCHEDULE

MARK	SUPPLY FAN DATA (3)						EXHAUST FAN DATA					COOLING COIL DATA						ELECTRICAL DATA									REMARKS
	SUPPLY AIR L/s	O.A. L/s (6)	E.S.P. Pa	FAN RPM	FAN W(HP)	VOLTS/ PH	EXHAUST AIR L/s	E.S.P. Pa	FAN RPM	FAN W(HP)	VOLTS/ PH	TOTAL WATTS	SENSIBLE WATTS	ENT.AIR TEMP °CDB	ENT.AIR TEMP °CWB	LVG.AIR TEMP °CDB	LVG.AIR TEMP °CWB	COMPRESSOR QTY	COMPRESSOR VOLTS/PH	COMPRESSOR KW	COMPRESSOR RLA	COMPRESSOR LRA	CONDENSER FANS QTY	CONDENSER FANS VOLTS/PH	CONDENSER FANS W(HP)	
PRTU-1	4182	514	951	1158	11190 (15)	480/3	3667	224	759	2238 (3)	480/3	95634	70671	26.7	18.9	12.7	12.1	2	480/3	15.4	27.3	178	3	480/3	746 (1)	①②④ ⑤⑦⑧
PRTU-2	4163	517	901	1158	11190 (15)	480/3	3646	199	758	2238 (3)	480/3	88602	69968	26.4	18.6	12.7	12.1	2	480/3	15.4	27.3	178	3	480/3	746 (1)	①②④ ⑤⑦⑧
PRTU-3	5200	955	753	948	11190 (15)	480/3	4425	200	620	2238 (3)	480/3	140680	109027	29.3	19.7	12.7	11.9	4	480/3	9.7	18.2	117	4	480/3	746 (1)	①②④ ⑤⑦⑧

① UNIT SHALL BE ROOF MOUNTED DRAW THRU TYPE WITH SUBBASE AND VERTICAL DISCHARGE. ROOF TOP UNIT MANUFACTURER SHALL PROVIDE EXTERNAL VIBRATION RAILS WITH A MINIMUM OF 50mm DEFLECTION. RAILS SHALL BE INSTALLED BETWEEN UNIT AND CURB.

② FILTER SECTION: PROVIDE 50mm THROWAWAY FILTERS, WITH MAX. FACE VELOCITY OF 1.8 M/s

③ EXTERNAL STATIC PRESSURE INCLUDES DUCTWORK, ROOF CURB, ECONOMIZER, AND 75Pa FOR DIRTY FILTERS

④ UNITS TO BE PROVIDED WITH DRY BULB ECONOMIZER

⑤ LOW AMBIENT CONTROL TO −18°C

⑥ OUTSIDE AIR TO BE MAINTAINED AT CONSTANT VOLUME THRU COMPLETE RANGE OF SUPPLY FAN OPERATION.

⑦ UNIT TO BE PROVIDED WITH VARIABLE FREQUENCY CONTROL. VARIABLE FREQUENCY CONTROLS TO BE INTEGRAL TO THE ROOF TOP UNIT

⑧ COOLING COIL CAPACITY BASED ON 35.6 °C AMBIENT TEMPERATURE.

PACKAGED CONSTANT VOLUME ROOF TOP UNIT SCHEDULE

MARK	SUPPLY FAN DATA						EXHAUST FAN DATA					COOLING COIL DATA						HEATING COIL DATA							ELECTRICAL DATA								REMARKS
	SUPPLY AIR L/s	O.A. L/s	E.S.P. Pa	FAN RPM	FAN W(HP)	VOLTS/ PH	SUPPLY AIR L/s	E.S.P. Pa	FAN RPM	FAN W(HP)	VOLTS/ PH	TOTAL WATTS	SENSIBLE WATTS	ENT.AIR TEMP °CDB	ENT.AIR TEMP °CWB	LVG.AIR TEMP °CDB	LVG.AIR TEMP °CWB	AIR L/s	WATTS	EAT °C	LAT °C	EWT °C	WATER L/s	WATER PD KPa	AIR PD Pa	COMPRESSOR QTY	COMPRESSOR VOLTS/PH	COMPRESSOR KW	COMPRESSOR RLA	COMPRESSOR LRA	CONDENSER FANS QTY	CONDENSER FANS VOLTS/PH	CONDENSER FANS W(HP)	
PRTU-4	7160	788	750	958	11190 (15)	480/3	6356	190	1050	5603 (7.5)	480/3	123059	100557	25.8	19.1	14.1	13.4	7106	57300	17.2	23.7	82.2	1.236	1.0	70	4	480/3	9.7	18.2	117	4	480/3	746 (1)	①②③④⑥⑦⑧
PRTU-5	2076	94	249	1067	3730 (5)	480/3	--	--	--	--	--	33435	28159	24.9	18.0	13.9	13.2	--	--	--	--	--	--	--	--	2	480/3	3.73	10	71	1	480/1	746 (1)	②⑤⑥⑧ ⑨

① UNIT SHALL BE ROOF MOUNTED DRAW THRU TYPE WITH SUBBASE AND VERTICAL DISCHARGE. ROOF TOP UNIT MANUFACTURER SHALL PROVIDE VIBRATION RAILS WITH A MINIMUM OF 50 DEFLECTION.

② FILTER SECTION: PROVIDE 50 THROWAWAY FILTERS, WITH MAX. FACE VELOCITY OF 1.8 M/s

③ EXTERNAL STATIC PRESSURE INCLUDES DUCTWORK, ROOF CURB, ECONOMIZER (PRTU−4 ONLY) HOT WATER COIL, AND 75 Pa FOR DIRTY FILTERS

④ UNITS TO BE PROVIDED WITH DRY BULB ECONOMIZER.

⑤ UNIT SHALL BE ROOF MOUNTED DRAW THRU TYPE WITH SUBBASE AND VERTICAL DISCHARGE.

⑥ LOW AMBIENT CONTROL TO −18°C

⑦ SEE HOT WATER COIL PIPING DETAIL A SHEET M5.1

⑧ COOLING COIL CAPACITY BASED ON 35.6 °C AMBIENT TEMPERATURE.

⑨ TRAVEL OFFICE AND LAUNDRY OPTION

PACKAGED POOL WATER SOURCE HEAT PUMP SCHEDULE

MARK	SUPPLY FAN DATA					EXHAUST/RETURN FAN DATA				HEAT PUMP COIL DATA								AUXILIARY HEATING COIL DATA							POOL CONDENSER WATER			ELECTRICAL DATA COMPRESSOR			REMARKS
	SUPPLY AIR L/s	O.A. L/s	E.S.P. Pa (2)	FAN W(HP)	VOLTS/ PH	EX/RTN AIR L/s	E.S.P. Pa	FAN W(HP)	VOLTS/ PH	COOLING WATTS	HEATING WATTS	EAT °CDB	EAT °CWB	MIXED EAT °CDB	MIXED EAT °CWB	EVAPORATOR LAT °CDB	EVAPORATOR LAT °CWB	CONDENSER LAT °CDB	CONDENSER LAT °CWB	AIR L/s	WATTS	EAT °C	LAT °C	EWT °C	WATER L/s	WATER PD KPa	WATTS	WATER L/s	WATER PD KPa	VOLTS/PH	RLA	LRA	
PHPU-1	5552	1580	310	11190 (15)	480/3	5552	114	11190 (15)	480/3	139760	175798	30.0	22.9	7.5	6.3	17.3	15.6	33.2	16.7	5552	165472	17.3	33.2	82.2	2.08	30.0	175798	6.31	96	480/3	71	297	① ③

① UNIT SHALL BE SPECIFICALLY DESIGNED TO CONTROL SWIMMING POOL ENVIRONMENT USING SWIMMING POOL WATER AS THE CONDENSING SOURCE.

② EXTERNAL STATIC PRESSURE INCLUDES DUCT, COILS, AND FILTER.

③ UNIT TO BE PROVIDED WITH REMOTE AIR COOLED CONDENSER (ACC−1). ACC−1 TO BE PROVIDED BY PHPU−1 MFGR.

AIR COOLED CONDENSER SCHEDULE

MARK	CONDENSER FANS QTY	CONDENSER FANS VOLTS/PH	CONDENSER FANS W(HP)	REMARKS
ACC−1	3	480/3	1120 (1.5)	①

① REMOTE AIR COOLED CONDENSER SHALL BE SIZED TO MATCH PHPU−1 AT 35°C AMBIENT AND SHALL BE PROVIDED BY PHPU−1 MFG.

CONVECTOR SCHEDULE

MARK	CAPACITY WATTS	EAT °CDB	EWT °C	L/s	MAX kPa	WATER ΔT °C	SIZE mm LENGTH X DEPTH	REMARKS
C−1	850	20	82.2	.018	.1	13.9	965 X 102	①②③
C−2	850	20	82.2	.018	.1	13.9	965 X 102	①②③

① SEE CONVECTOR DETAIL C SHEET M5.1

② ALL CONVECTOR RUN OUTS 20 ø

③ CAPACITY BASED ON .00009 (SQM)(°C)/W FOULING FACTOR

PUMP SCHEDULE

MARK	L/s	HEAD kPa	MOTOR DATA MAX. W(HP)	MOTOR DATA RPM	MOTOR DATA VOLT/PH	MOTOR DATA NEMA STARTER	SERVICE	CONFIGURATION	REMARKS
P−1	9.24	269	5595 (7.5)	1750	480/3	1	HOT WATER	END SUCTION BASE MTD	①②
P−1A	9.24	269	5595 (7.5)	1750	480/3	1	HOT WATER	END SUCTION BASE MTD	①②
P−2	.19	15	62 (1/12)	1750	120/1	00	DHW RECIRC	IN LINE	③
P−3	.19	15	62 (1/12)	1750	120/1	00	DHW RECIRC	IN LINE	③ ⑤
P−4	1.9	60	377 (1/2)	1750	120/1	--	WATER	SUMP	④
P−5	6.31	154	2238 (3)	1750	480/3	0	POOL WATER	IN LINE	③

① SEE BASE MOUNTED CENTRIFUGAL PUMP DETAIL D SHEET M5.1

② PROVIDE WITH SUCTION DIFFUSER

③ SEE IN−LINE PUMP DETAIL A SHEET M5.2

④ SEE SUMP PUMP DETAIL D SHEET M5.7

⑤ TRAVEL OFFICE AND LAUNDRY OPTION

REVISIONS | DESCRIPTION | DATE | APPROVED | STAL

DESIGNED & ENGINEERED BY: LANTDIV NAVAL FACILITIES ENGINEERING COMMAND

SEAL

APPROVED
ACTIVITY − SATISFACTORY TO
DATE

APPROVED
FOR EFD FOR COMMANDER NAVFAC
DATE

A/E
EFD
DESIGN JI/TH
DRAWN JI/TH
REVIEW BDC
QC
CHIEF ARCH./ ENGR.
PROJECT MANAGER DWB
FIRE PROTECTION
BRANCH MANAGER
DESIGN DIRECTOR

DEPARTMENT OF THE NAVY
NAVAL STATION
ATLANTIC DIVISION
NAVAL FACILITIES ENGINEERING COMMAND
NORFOLK, VIRGINIA

NAVAL STATION NORFOLK, VIRGINIA
WATERFRONT ATHLETIC COMPLEX
SCHEDULES

CODE ID. NO. 80091 | SIZE D
SCALE: NONE
EFD NO. 509102
STA. PROJ. NO. P−015
SPEC. NO. 05−00−8090
CONSTR. CONTR. NO. N62470−B−00−8090
NAVFAC DRAWING NO. 4409102
SHEET 233 OF 284
M6.1

FILENAME: 8090M601.DWG, PLOT SCALE: 1=1, SAVED ON 10/06/99 AT 09:50, XREFS: NONE

DRAWFORM REVISION 27 JULY 98

SERIES VARIABLE AIR VOLUME SCHEDULE

MARK	PRIMARY AIR DATA MAX. L/s	MIN. L/s	INLET SP Pa	INLET DIA mm	ORIFICE DIA mm	SVAV FAN DATA ⑦ L/s	ESP Pa	MAX. W(HP)	VOLTS PHASE	HEATING COIL DATA ⑥ KW	EAT °CDB	EWT °C	WATER L/s	WATER PD kPa	AIR PD Pa	REMARKS
SVAV-1	86	35	87	125	–	212	98	94 (1/8)	277/1	.67	17.8	82.2	.0316	.3	13	①②③④⑤
-2	186	75	42	150	–	189	109	94 (1/8)		.76					13	
-3	135	54	82	125	–	135	97	50 (1/15)		.56					13	
-4	124	50	45	200		953	170	560 (3/4)		2.78			.0600	.9	63	
-5	598	239	45	250	–	598	112	249 (1/3)		3.58			.0770	1.5	32	
-6	665	266	31	250		665	115	373 (1/2)		4.19			.0902	2.1	38	
-7	133	53	62	150	–	364	141	249 (1/3)		.85			.0316	.3	32	
-8A -8B -8C -8D -8E -8F	330	132	45	200	–	708	152	373 (1/2)		1.32					44	
-9A -9B -9C	425	170	40	200	–	425	132	249 (1/3)		1.70					38	
-10A -10B -10C	520	208	45	200	–	520	133	249 (1/3)		2.14			.046	.9	32	
-11	303	121	62	150	–	425	142	249 (1/3)		1.41			.0316	.3	38	
-12	298	119	62	150	–	298	131	249 (1/3)		.26					38	
-13	264	106	45	200	–	668	122	373 (1/2)		1.79					38	
-14	122	49	87	125	–	236	75	94 (1/8)		.3					19	
-15	212	85	62	150	–	614	62	249 (1/3)		1.2					63	
-16	205	82	62	150	–	568	112	249 (1/3)		1.8					58	
-17	205	82	62	150	–	568	112	249 (1/3)		1.8					58	
-18	71	29	87	125	–	236	75	94 (1/8)		.6					30	
-19	118	48	62	150	–	401	100	249 (1/3)		.7					67	
-20	118	48	62	150	–	401	100	249 (1/3)		.7					67	
-21	71	29	87	125	–	236	75	94 (1/8)		.6					30	
-22	71	29	87	125	–	236	75	94 (1/8)		.6					30	
-23	212	85	62	150	–	614	62	249 (1/3)		1.6			.035		63	
-24	1121	449	50	300	–	1121	280	560 (3/4)		4.5			.0971	2.1	167	
-25	224	90	62	150	–	625	112	249 (1/3)		1.3			.0316	.3	55	
-26	245	98	62	150	–	302	162	249 (1/3)		1.0					47	
-27	231	92	62	150	–	441	90	249 (1/3)		.9					80	
-28	142	56	62	150	–	394	112	249 (1/3)		1.0					70	
-29	403	161	45	200	–	490	149	249 (1/3)		1.6			.0347		43	
-30	802	321	60	250	–	802	100	373 (1/2)		4.6			.100	2.1	100	
-31	600	240	31	250	–	600	87	249 (1/3)	277/1	2.4	17.8	82.2	.0517	.6	63	①②③④⑤

① ALL FANS SHALL HAVE SPEED CONTROL AND FAN L/s SHOWN SHALL BE AT MID RANGE
② SEE HOT WATER COIL PIPING DETAIL A SHEET M5.1
③ SEE SERIES VARIABLE VOLUME UNIT DETAIL A SHEET M5.4
④ CAPACITY BASED ON .00009(SQM)(°C)/W FOULING FACTOR AND 11°C WATER TEMPERATURE DROP
⑤ WITH INTEGRAL DISCONNECT
⑥ ALL COIL RUNOUTS SHALL BE 15ø
⑦ EXTERNAL STATIC PRESSURE INCLUDES DUCT, COILS, AND FILTER LOSES

UNIT HEATER SCHEDULE

MARK	L/S	FAN MOTOR W(HP)	FAN MOTOR VOLTAGE/ø	CAPACITY WATTS	WATER L/S	WATER ENTR °C	WATER LVG °C	WATER KPa	AIR ENTR °C	AIR LVG °C	TYPE	MOUNTING HEIGHT mm	REMARKS
UH-1	132	30 (1/25)	115/1ø	820	.03	82.2	76.0	.03	12.8	17.9	HORIZ	2438	①②③
UH-2	132	30 (1/25)	115/1ø	615	.03	82.2	77.6	.03		16.6	HORIZ		①②③
UH-3	132	30 (1/25)	115/1ø	615	.03	82.2	77.6	.03		16.6	HORIZ		①②③
UH-4	132	30 (1/25)	115/1ø	2256	.11	82.2	77.2	.09	12.8	26.9	HORIZ	2438	①②③

① SEE HOT WATER HORIZONTAL UNIT HEATER PIPING DETAIL B SHEET M5.1
② ALL UNIT HEATER RUNOUTS SHALL BE 15 ø
③ CAPACITY BASED ON .00009(SQM)(°C)/W FOULING FACTOR

CONSTANT VOLUME TERMINAL UNIT SCHEDULE

MARK	PRIMARY AIR DATA L/s	INLET SP Pa ⑤	ORIFICE DIA mm	INLET DIA mm	HEATING COIL DATA ④ KW	EAT °CDB	EWT °C	WATER L/s	WATER PD kPa	AIR PD Pa	REMARKS
CV-1	234	175	–	150	2.34	14.4	82.2	.0505	5.4	83	①②③
CV-2	207	197	–	150	2.08			.0448	3.9	65	
CV-3	169	186	–	150	1.98			.0366	1.9	20	
CV-4	39	174	–	125	.38			.0316	1.5	20	
CV-5	96	125	–	150	.644			.0316	1.5	15	①②③

① CAPACITY BASED ON .00009(SQM)(°C)/W FOULING FACTOR AND 11°C WATER TEMPERATURE DROP
② SEE CONSTANT VOLUME TERMINAL UNIT DETAIL B SHEET M5.4
③ SEE HOT WATER COIL PIPING DETAIL A SHEET M5.1
④ ALL COIL RUNOUTS SHALL BE 15ø
⑦ INLET STATIC PRESSURE INCLUDES DUCT, AND COIL LOSES.

EXPANSION TANK SCHEDULE

MARK	TANK VOL. L	TYPE	AIR CHARGE KPa	CONFIGURATION	APPROX. DIMEN. (MM) (DIA.X HGT)	LOCATION	REMARKS
ET-1	140	①	83	VERT. FLOOR MTD	508 X 1003	MECH RM 126	②③

① DIAPHRAGM TYPE
② MAXIMUM SYSTEM PRESSURE = 207 KPa
③ SEE MAKE-UP WATER/AIR EXPANSION TANK DETAIL A SHEET M5.7

FAN SCHEDULE

MARK	L/S	E.S.P. Pa	MOTOR DATA W(HP)	RPM	VOLT/PH	NEMA STARTER	DRIVE TYPE	CONFIGURATION	DAMPER TYPE	DAMPER SIZE	DAMPER ΔP(Pa)	REMARKS
EF-1	397	156	187(1/4)	1302	120/1	00	DIRECT	ROOF MTG CENTRIFUGAL	BACK-DRAFT	300 X 300	55	①②③④⑥
EF-2	94	32	37 (1/20)	1000	120/1	00	DIRECT	ROOF MTG CENTRIFUGAL	MOTOR-IZED	250 X 250	6	③④⑥
EF-3	218	95	37 (1/20)	1295	120/1	00	DIRECT	ROOF MTG CENTRIFUGAL	BACK-DRAFT	250 X 250	36	①②③④⑥
EF-4	157	76	37 (1/20)	1120	120/1	00	DIRECT	ROOF MTG CENTRIFUGAL	BACK-DRAFT	250 X 250	23	①②③④⑥
EF-5	788	75	151(1/5)	900	120/1	00	DIRECT	ROOF MTG CENTRIFUGAL	MOTOR-IZED	380 X 380	75	③④⑥
EF-6	1585	241	1120(1-1/2)	1175	480/3	00	BELT	ROOF MTG CENTRIFUGAL	MOTOR-IZED	475 X 475		③④
EF-7	216	82	30 (1/25)	1600	120/1	00	DIRECT	ROOF MTG CENTRIFUGAL	MOTOR-IZED	250 X 250	30	③④⑥
EF-8	24	33	27 (1/28)	500	120/1	00	DIRECT	ROOF MTG CENTRIFUGAL	BACK-DRAFT	250 X 250	16	①③④⑥
XF-9	128	57	37 (1/20)	1300	120/1	00	DIRECT	IN LINE CENTRIFUGAL	—	—	—	④⑤⑥
EF-10	684	78	249 (1/3)	875	120/1	00	DIRECT	IN LINE CENTRIFUGAL	⑩	—	—	②④⑤⑥
EF-11	142	40	37 (1/20)	1020	120/1	00	DIRECT	ROOF MTG CENTRIFUGAL	BACK-DRAFT	250 X 250	15	①②③④⑥
EF-12	106	41	37 (1/20)	980	120/1	00	DIRECT	ROOF MTG CENTRIFUGAL	BACK-DRAFT	250 X 250	10	①②③④⑥
EF-13	708	94	187(1/4)	900	120/1	00	BELT	ROOF MTG CENTRIFUGAL	BACK-DRAFT	375 X 375	67	①②③④⑥
EF-14	104	25	93 (1/8)	1150	120/1	00	DIRECT	CABINET FAN	—	—	—	⑥⑦
EF-15	104	25	93 (1/8)	1150	120/1	00	DIRECT	CABINET FAN	—	—	—	⑥⑦
XF-16	621	125	560(3/4)	1750	480/3	00	BELT	IN LINE CENTRIFUGAL	—	—	—	④⑤
EF-17	104	25	93 (1/8)	1150	120/1	00	DIRECT	CABINET FAN	—	—	—	⑥⑦
EF-18	104	25	93 (1/8)	1150	120/1	00	DIRECT	CABINET FAN	—	—	—	⑥⑦
EF-19	104	25	93 (1/8)	1150	120/1	00	DIRECT	CABINET FAN	—	—	—	⑥⑦
EF-20	104	25	93 (1/8)	1150	120/1	00	DIRECT	CABINET FAN	—	—	—	⑥⑦
F-21A THRU F-21N	--	--	--	--	120/1		DIRECT	CEILING FAN	—	—	—	⑧⑨

① EQUIPPED WITH BACKDRAFT DAMPER AND BIRDSCREEN (BY MFGR.)
② THERMOSTAT CONTROLLED
③ SEE EXHAUST FAN DETAIL C SHEET M5.2
④ INTEGRAL DISCONNECT
⑤ SEE CENTRIFUGAL IN-LINE FAN DETAIL C SHEET M5.7
⑥ WITH SPEED CONTROL
⑦ SEE CABINET FAN DETAIL B SHEET M5.7
⑧ 5 BLADE, 1300mm ø FAN
⑨ SEE SHEET E3.01 FOR 3-WAY SWITCH LOCATION
⑩ SEE MOTORIZED DAMPER SCHEDULE SHEET M6.4

REVISIONS | DESCRIPTION | DATE | APPROVED

DESIGNED & ENGINEERED BY: LANTDIV NAVAL FACILITIES ENGINEERING COMMAND

SEAL

APPROVED
ACTIVITY - SATISFACTORY TO
DATE
APPROVED
FOR EFD FOR COMMANDER NAVFAC
DATE

A/E EFD
DESIGN JI/TH
DRAWN JI/TH
REVIEW BDC
QC
CHIEF ARCH./ ENGR.
PROJECT MANAGER DWB
FIRE PROTECTION
BRANCH MANAGER
DESIGN DIRECTOR

NAVAL FACILITIES ENGINEERING COMMAND
ATLANTIC DIVISION
DEPARTMENT OF THE NAVY
NAVAL STATION NORFOLK, VIRGINIA
NAVAL STATION NORFOLK, VIRGINIA
WATERFRONT ATHLETIC COMPLEX
SCHEDULES

CODE ID. NO. 80091 SIZE D
SCALE: NONE
EFD NO. 509103
STA. PROJ. NO. P-015
SPEC. NO. 05-00-8090
CONSTR. CONTR. NO. N62470-B-00-8090
NAVFAC DRAWING NO. 4409103
SHEET 234 OF 284
M6.2

DRAWFORM REVISION 27 JULY 98

FILENAME: 8090M602.DWG, PLOT SCALE: 1=1, SAVED ON 10/06/99 AT 12:06, XREFS: NONE

8 7 6 5 4 3 2 1
D C B A

EXHAUST REGISTER SCHEDULE

MARK	NECK SIZE mm	MAX. S.P. Pa	DEFLECTION	REMARKS
ER-1	250 X 250	6	45°	(1)
ER-2	150 X 150	6	45°	(1)
ER-3	300 X 300	9	45°	(1)
ER-4	450 X 450	6	45°	(1)
ER-5	400 X 400	9	45°	(1)

(1) SEE DETAIL B SHEET M5.2

RETURN REGISTER SCHEDULE

MARK	SIZE mm	MAX. S.P. Pa	REMARKS
RR-1	1200 X 600	21	(1)
RR-2	750 X 750	15	(1)

(1) SEE DETAIL B SHEET M5.2

FILTER GRILLE RETURN REGISTER SCHEDULE

MARK	SIZE mm	MAX. S.P. Pa	REMARKS
FG-1	450x450	24	(1)

(1) PROVIDE 25 THICK FIBERGLASS FILTER CUT TO SIZE.

SUPPLY DIFFUSER SCHEDULE

MARK	NECK DIA mm	MAX. S.P. Pa	BLOW PATTERN	THROW (M)	REMARKS
SD-1	150 X 150	26	4-WAY	.6-2.1	CEILING SUPPLY (1)
SD-2	225 X 225	17	4-WAY	1.2-3.0	CEILING SUPPLY (1)
SD-3	300 X 300	20	4-WAY	1.2-4.6	CEILING SUPPLY (1)
SD-4	375 X 375	24	4-WAY	1.2-5.5	CEILING SUPPLY (1)
SD-5	450 X 450	25	4-WAY	2.1-3.4	CEILING SUPPLY (1)
SD-6	300 X 300	22	2-WAY	2.1-3.7	CEILING SUPPLY (1)
SD-7	600 X 600	13	4-WAY	2.4-4.3	CEILING SUPPLY (1)
SD-8	150 X 150	12	2-WAY	.9-1.2	CEILING SUPPLY (1)
SD-9	150 X 150	12	3-WAY	.6-1.2	CEILING SUPPLY (1)
SD-10	1000 X 375	13	1-WAY	15-21	DRUM DIFFUSER (2)
SD-11	750 X 375	13	1-WAY	17-27	DRUM DIFFUSER (2)
SD-12	225 X 375	23	2-WAY	2.1-4.5	CEILING SUPPLY (1)
SD-13	225 X 225	23	2-WAY	2.1-4.5	CEILING SUPPLY (1)

(1) SEE DETAIL B SHEET M5.2

(2) DRUM DIFFUSER INSTALLED 15° BELOW HORIZONTAL AT 0° DEFLECTION; SEE DETAIL ON SHEET M4.4

AIR SEPARATOR SCHEDULE

MARK	L/S	MAX. W.P.D KPa	WITH INTEGRAL STRAINER	REMARKS
AS-1	9.24	6	YES	(1)

(1) SEE MAKE-UP WATER/AIR SEPARATION DETAIL A SHEET M5.7

TRANSFER GRILLE SCHEDULE

MARK	SIZE mm	MAX. S.P. Pa	REMARKS
TG-1	200 x 200	5	(1) (2)
TG-2	250 X 250	5	(1) (2)
TG-3	300 X 300	5	(1) (2)
TG-4	450 X 450	5	(1) (2)
TG-5	600 X 900	5	(3)

(1) DUCT WORK ATTACHED TO TRANSFER GRILLE SHALL BE ACOUSTICAL LINED, SEE DETAIL D SHEET M5.2

(2) SEE DETAIL B SHEET M5.2

(3) THROUGH WALL RETURN AIR GRILL, HEAVY DUTY STEEL

LINEAR SLOT DIFFUSER

MARK	AIR FLOW L/s	LENGTH M	FLOW/LENGTH L/s/M	SLOT SIZE mm	NO OF SLOTS	MAX. S.P. Pa	THROW (M)	REMARKS
LSD-1	44	1.22	36	20	2	2.5	3.1	(1)
LSD-2	55	1.52	36	20	2	2.5	3.1	(1)
LSD-3	126	2.44	52	20	1	25	2.4	(2) (3)
LSD-4	252	3.66	69	25	2	9	2.1	(2) (3)
LSD-5	189	3.66	52	20	1	25	2.4	(2) (3)
LSD-6	63	1.22	52	20	1	25	2.4	(2) (3)
LSD-7	76	2.44	31	15	1	15	3.4	(2) (3)
LSD-8	51	2.44	21	15	1	15	1.8	(2) (3)

(1) FIRST SLOT TO THROW VERTICAL. SECOND SLOT TO THROW HORIZONTAL. DIFFUSER FACTORY INSTALLED IN PLENUM.

(2) DIFFUSER FIELD INSTALLED IN DUCTWORK

(3) ALL POOL DIFFUSERS SHALL BE OF ALUMINUM CONSTRUCTION

CONTROL VALVE SCHEDULE

MARK	UNIT SERVED	SERVICE	TYPE	ACTION	CAPACITY L/S	CAPACITY KG/HR	STEAM (KPa) PRESSURE INITIAL	STEAM (KPa) PRESSURE FINAL	WATER PD (KPa)	SIZE (mm)	REMARKS
V-1	SVAV ALL	HWR	2 WAY	MOD	SEE SCHEDULE	–	–	–	30	15	
V-2	CV ALL	HWR	2 WAY	MOD	SEE SCHEDULE	–	–	–	30	15	
V-3	CONVECTORS ALL	HWR	2 WAY	MOD	SEE SCHEDULE	–	–	–	30	15	(1) (2)
V-4	PRTU-4	HWR	3 WAY	MOD	1.24	–	–	–	30	25	(3)
V-5	PHPU-1	HWR	3 WAY	MOD	2.08	–	–	–	30	40	(3)
V-6	PHE-1	HWR	2 WAY	MOD	3.47	–	–	–	30	40	
V-7	HWC-1	HWR	3 WAY	MOD	.26	–	–	–	30	25	
V-8	PRV-1	STM	2 WAY	MOD	–	937	1722	103	–	40	
V-9	PRV-1	STM	2 WAY	MOD	–	468	1722	103	–	25	
V-10	PRV-2	STM	2 WAY	MOD	–	166	1722	103	–	25	
V-11	PRV-2	STM	2 WAY	MOD	–	83	1722	103	–	15	
V-12	SC-1	STM	2 WAY	MOD	–	1031	103	35	–	65	
V-13	DWH-1	STM	2 WAY	MOD	–	375	103	35	–	50	
V-14	DWH-2	STM	2 WAY	MOD	–	249	103	35	–	40	

(1) VALVES MUST BE CAPABLE OF TIGHT CLOSURE AGAINST PUMP SHUT-OFF HEAD.

(2) CONVECTORS SHALL BE PROVIDED WITH SELF-CONTAINED THERMOSTATIC CONTROL VALVES.

(3) VALVES TO BE PROVIDED BY UNIT MFGR

REVISIONS | DESCRIPTION | DATE | APPROVED | SYM.

DESIGNED & ENGINEERED BY: LANTDIV Naval Facilities Engineering Command

SEAL

APPROVED

ACTIVITY – SATISFACTORY TO

DATE

APPROVED

FOR EFD FOR COMMANDER NAVFAC

DATE

A/E	EFD
DESIGN	JI/TH
DRAWN	JI/TH
REVIEW	BDC
QC	
CHIEF ARCH./ ENGR.	
PROJECT MANAGER	DWB
FIRE PROTECTION	
BRANCH MANAGER	
DESIGN DIRECTOR	

DEPARTMENT OF THE NAVY — NAVAL FACILITIES ENGINEERING COMMAND — ATLANTIC DIVISION — NAVAL STATION NORFOLK, VIRGINIA

WATERFRONT ATHLETIC COMPLEX

SCHEDULES

CODE ID. NO. 80091	SIZE D
SCALE:	NONE
EFD NO.	509104
STA. PROJ. NO.	P-015
SPEC. NO.	05-00-8090
CONSTR. CONTR. NO.	N62470-B-00-8090
NAVFAC DRAWING NO.	4409104
SHEET	235 OF 284

M6.3

FILENAME: 8090M603.DWG, PLOT SCALE: 1" = 1', SAVED ON 10/04/99 AT 07:28, XREFS: NONE

DRAWFORM REVISION 27 JULY 98

8 7 6 5 4 3 2 1

D C B A

LOUVER SCHEDULE

MARK	L/s	LOUVER H X W mm	TYPE	MAX.PD. Pa	LOCATION	REMARKS
L-1	397	610 X 1016	O.A. INTAKE	10	MECH 126	
L-2	218	610 X 813	O.A. INTAKE	10	ELECT 131	
L-3	157	610 X 610	O.A. INTAKE	12	FIRE PROTECT 132	
L-4	5664	1219 X 3861	O.A. INTAKE	12	POOL HVAC 124	(1)
L-5	5664	1219 X 3861	EXHAUST	12	POOL STORAGE 125	(1)
L-6	684	813 X 1016	O.A. INTAKE	12	POOL HVAC 124	
L-7	684	813 X 1016	EXHAUST	12	POOL STORAGE 125	
L-8	791	813 X 1219	EXHAUST	12	NEXCOM 130	
L-9	791	610 X 1219	O.A. INTAKE	12	NEXCOM 130	
L-10	791	610 X 203	EXHAUST	8	LAUNDRY 130A	

(1) MULTIPLE LOUVERS SEE SHEET A3.21 FOR DETAILS

MOTORIZED DAMPER SCHEDULE (1)

MARK	L/s	LOUVER H X W mm	TYPE	MAX.PD. Pa	LOCATION	REMARKS
MD-1	397	610 X 1016	O.A. INTAKE	3	MECH 126	
MD-2	218	610 X 813	O.A. INTAKE	3	ELECT 131	
MD-3	157	610 X 610	O.A. INTAKE	5	FIRE PROTECT 132	
MD-4	5664	650 X 1050	O.A. INTAKE	5	POOL HVAC 124	
MD-5	5664	850 X 850	EXHAUST	5	POOL STORAGE 125	
MD-6	684	813 X 1016	O.A. INTAKE	5	POOL HVAC 124	
MD-7	684	550 X 550	EXHAUST	5	POOL STORAGE 125	

(1) SEE FAN SCHEDULE ON SHEET M6.2 FOR OTHER MOTORIZED DAMPERS

CHEMICAL FEED TANK SCHEDULE

MARK	CAPACITY L	APPROXIMATE TANK DIM DIA X HGT (mm)	LOCATION	REMARKS
CFT-1	19	250 X 375	ROOM 126	(1)

(1) SEE DETAIL E SHEET M5.1

TRAP SCHEDULE

MARK	CAPACITY (KG/HR)	PRESSURE INLET (KPa)	PRESSURE DIFF. (KPa)	CONFIGURATION	SERVICE	REMARKS
T-1	12	103	69	FLOAT AND THERMOSTATIC	STEAM	PRV-1
T-2	12	103	69	FLOAT AND THERMOSTATIC	STEAM	PRV-2
T-3	2309	69	14	FLOAT AND THERMOSTATIC	STEAM	SC-1
T-4	1125	69	14	FLOAT AND THERMOSTATIC	STEAM	DWH-1
T-5	747	69	14	FLOAT AND THERMOSTATIC	STEAM	DWH-2
T-6	50	1722	1378	DISK WITH INTEGRAL STRAINER	STEAM	HP DRIP

STEAM CONVERTER SCHEDULE

MARK	CAPACITY WATTS	STEAM SIDE Kg/HR	STEAM SIDE SUPPLY PRESS. (KPa)	WATER SIDE L/s	WATER SIDE EWT (°C)	WATER SIDE LWT (°C)	WATER SIDE MAX. WPD (KPa)	APPROXIMATE DIMENSIONS (mm)	REMARKS
SC-1	639207	1031	34.5	9.24	65.7	82.2	3.5	254ØX1956L	(1)

(1) SEE DETAIL C SHEET M5.6

POOL HEAT EXCHANGER SCHEDULE

MARK	CAPACITY WATTS	SHELL SIDE SPACE HEATING WATER L/s	EWT (°C)	LWT (°C)	MAX. WPD (KPa)	TUBE SIDE POOL WATER L/s	EWT (°C)	LWT (°C)	MAX. WPD (KPa)	MIN HEATING SURFACE AREA MSQ	APPROXIMATE DIMENSIONS (mm)	REMARKS
PHE-1	322168	3.47	82.2	60	15	6.31	27.8	40	4.8	5.4	216ØX2260L	(1) (2)

(1) SEE DETAIL F SHEET M5.1

(2) 100 mm BAFFLE SPACING

DOMESTIC WATER HEATER SCHEDULE

MARK	CAPACITY WATTS	STEAM SIDE Kg/HR	STEAM SIDE SUPPLY PRESS. (KPa)	WATER SIDE L/H	WATER SIDE EWT (°C)	WATER SIDE LWT (°C)	WATER SIDE MIN TANK CAPACITY (L)	APPROXIMATE DIMENSIONS (mm)	REMARKS
DWH-1	231863	375	34.5	3596	4.4	60	3596	1220ØX3353H	(1)
DWH-2	153762	249	34.5	2385	4.4	60	2460	1067ØX2997H	(1) (2)

(1) VERTICAL TYPE TANK. TANK HEIGHT INCLUDES 305 mm FOR LEG HEIGHT.

(2) TRAVEL OFFICE AND LAUNDRY OPTION

HOT WATER COIL SCHEDULE

MARK	HEATING CAPACITY WATTS	AIR SIDE L/s	EAT (°C)	LAT (°C)	MAX. APD (Pa)	WATER SIDE L/s	EWT (°C)	LWT (°C)	MAX. WPD (KPa)	MAX. FACE VELOCITY M/S	UNIT SERVING	REMARKS
HWC-1	6446	2076	19.8	22.4	50	.26	82.2	76.3	.30	3.0	PRTU-5	(1) (2)

(1) SEE DETAIL A SHEET M5.1

(2) TRAVEL OFFICE AND LAUNDRY OPTION

REVISIONS

DESCRIPTION	DATE	APPROVED

DESIGNED & ENGINEERED BY: LANTDIV NAVAL FACILITIES ENGINEERING COMMAND

SEAL

APPROVED

ACTIVITY – SATISFACTORY TO

DATE

APPROVED

FOR EFD FOR COMMANDER NAVFAC

DATE

A/E	EFD
DESIGN	JI/TH
DRAWN	JTI
REVIEW	BDC
QC	
CHIEF ARCH./ ENGR.	
PROJECT MANAGER	DWB
FIRE PROTECTION	
BRANCH MANAGER	
DESIGN DIRECTOR	

DEPARTMENT OF THE NAVY — NAVAL FACILITIES ENGINEERING COMMAND — ATLANTIC DIVISION — NAVAL STATION NORFOLK, VIRGINIA

WATERFRONT ATHLETIC COMPLEX

NAVAL STATION NORFOLK, VIRGINIA

SCHEDULES

CODE ID. NO. 80091	SIZE D
SCALE:	NONE
EFD NO.	509105
STA. PROJ. NO.	P-015
SPEC. NO.	05-00-8090
CONSTR. CONTR. NO.	N62470-B-00-8090
NAVFAC DRAWING NO.	4409105
SHEET 236 OF 284	

M6.4

FILENAME: 8090M604.DWG, PLOT SCALE: 1" = 1', SAVED ON 10/04/99 AT 07:33, XREFS: NONE

DRAWFORM REVISION 27 JULY 98

8 7 6 5 4 3 2 1

D C B A

SEQUENCE OF OPERATION

SUMMER / WINTER
UNLESS INDICATED OTHERWISE, DURING THE OCCUPIED PERIOD, WHEN THE OA TEMPERATURE RISES ABOVE 21 DEG. C., THE SYSTEM SHALL BE IN THE SUMMER MODE AND THE SPACE TEMPERATURE SET POINT SHALL BE 24.4 DEG. C. WHEN THE OA TEMPERATURE FALLS BELOW 15 DEG. C, THE SYSTEM SHALL BE IN THE WINTER MODE AND THE SPACE TEMPERATURE SET POINT SHALL BE 21.1 DEG. C. THERE SHALL BE NO CHANGE IN SET POINT BETWEEN THOSE TWO OA TEMPERATURES.

OCCUPIED / UNOCCUPIED
THE OCCUPIED MODE SHALL BE DETERMINED BY THE DDC SYSTEM AND SHALL ENABLE ALL SYSTEMS UNLESS INDICATED OTHERWISE.
DURING THE UNOCCUPIED MODE, THE COOLING SYSTEM SHALL BE DE-ENERGIZED AND IN THE WINTER MODE, THE SPACE TEMPERATURE FOR ALL SPACES SHALL BE 13 DEG. C. UNLESS NOTED OTHERWISE.
THE HEATING SYSTEM SHALL RUN CONTINUOUSLY AND NOT BE EFFECTED BY THE OCCUPIED / UNOCCUPIED MODES.
DURING OPTIMUM STARTUP, THE SPACE TEMPERATURE SHALL BE CHANGED TO THE OCCUPIED MODE SET POINT AND THE SPACE HEATED OR COOLED AS NECESSARY. EXHAUST FANS SHALL REMAIN DE-ENERGIZED AND THE OA AND EXHAUST DAMPERS SHALL REMAIN CLOSED. IN THE WINTER MODE, PRTU-1, 2, 3 SHALL REMAIN DE-ENERGIZED UNTIL THE OCCUPIED PERIOD.

PRTU-1, 2, 3
THE PRTU SHALL BE OPERATED BY PACKAGED CONTROLS SUPPLIED BY THE UNIT MANUFACTURER.
WHEN ENABLED BY THE DDC SYSTEM, THE PRTU SUPPLY AIR (SA) FAN SHALL BE ENERGIZED IF CALLED FOR BY THE PRTU CONTROLLER. DURING THE OCCUPIED MODE, THE UNIT OA DAMPER SHALL OPEN TO THE MINIMUM POSITION AND THE INTERLOCKED FANS SHALL BE ENERGIZED.
THE OPTIMIZED START CYCLE SHALL OPERATE SIMILAR TO THE OCCUPIED MODE WITH THE OA DAMPER CLOSED AND THE INTERLOCKED FANS OFF.
THE SUPPLY DUCT STATIC PRESSURE (SP) SHALL BE CONTROLLED BY MODULATING THE SA FAN CAPACITY THROUGH THE VARIABLE FREQUENCY DRIVE. ON A RISE IN SP, THE FAN SPEED SHALL DECREASE. ON A FALL IN SP, THE REVERSE SHALL OCCUR.
ON A RISE IN SA TEMPERATURE, THE COMPRESSOR SHALL CYCLE TO MAINTAIN THE SET POINT, 12.7 DEG. C.
THE QUANTITY OF OA SHALL BE CONTROLLED BY A CONSTANT VOLUME DAMPER THAT SENSES VELOCITY PRESSURE (VP) AND MODULATES CLOSED WHEN THE VP RISES ABOVE SET POINT AND OPENS WHEN THE VP FALLS BELOW SET POINT.
AN ECONOMIZER CYCLE SHALL BE INITIATED WHEN THE OA TEMPERATURE FALLS BELOW 13 DEG. C. AND DISABLED WHEN THE OA RISES ABOVE 13 DEG. C. THE ECONOMIZER CYCLE SHALL START THE UNIT EXHAUST FAN, WHICH SHALL MAINTAIN THE BUILDING SP AT 13 Pa THROUGH THE VFD.
DURING THE UNOCCUPIED MODE, WHEN THE OA TEMPERATURE FALLS BELOW 3 DEG. C., VALVE V-4 SHALL FULLY OPEN TO THE COIL. WHEN THE OA TEMPERATURE RISES, THE REVERSE SHALL OCCUR.
THE DDC SYSTEM SHALL SEND A SIGNAL TO ENERGIZE THE ASSOCIATED SVAV BOXES FIVE MINUTES PRIOR TO ENABLING THE PRTU.
NOTE THE DDC SYSTEM MUST ENABLE THE PRTU EARLY ENOUGH TO ALLOW FOR THE OPTIMUM START CYCLE. PRTU-1, 2 AND EF-6, 8 AND XF-9, 16 SHALL BE INTERLOCKED TO RUN TOGETHER. INTERLOCK EF-7 WITH PRTU-3.
IF THE PRTU CONTROLS CANNOT DELAY THE START OF THE EXHAUST FANS UNTIL THE OA DAMPER IS OPENED, PROVIDE A LIMIT SWITCH TO ALERT THE DDC SYSTEM THAT THE OA DAMPER HAS REACHED ITS MINIMUM POSITION AND THE DDC SYSTEM SHALL START THE FANS.
DURING THE UNOCCUPIED MODE, THE SA FAN, THE ASSOCIATED SVAV BOXES, AND THE EF?S AND XF?S SHALL BE DE-ENERGIZED AND THE OA DAMPER CLOSED. A LIMIT SWITCH SHALL INDICATE THE FULLY CLOSED STATUS OF THE OA DAMPER.
THE OVERRIDE TIMER, LOCATED AS INDICATED, SHALL BRING ON THE OCCUPIED PERIOD FOR ONE HOUR EACH TIME IT IS PUSHED FOR A MAXIMUM OF 4 HOURS.

PRTU-4
THE PRTU SHALL BE OPERATED BY PACKAGED CONTROLS SUPPLIED BY THE UNIT MANUFACTURER.
WHEN ENABLED BY THE DDC SYSTEM, THE PRTU (SA) FAN SHALL BE ENERGIZED IF CALLED FOR BY THE PRTU CONTROLLER AND RUN CONTINUOUSLY. DURING THE OCCUPIED MODE, THE UNIT OA DAMPER SHALL OPEN TO THE MINIMUM POSITION AND THE ASSOCIATED FANS SHALL BE ENERGIZED.
THE OPTIMIZED START CYCLE SHALL OPERATE SIMILAR TO THE OCCUPIED MODE WITH THE OA DAMPER CLOSED AND THE EXHAUST FANS OFF.
ON A RISE IN SPACE TEMPERATURE, THE COMPRESSOR SHALL CYCLE TO MAINTAIN THE SET POINT, 24.4 DEG. C.
ON A FALL IN SPACE TEMPERATURE, THE PRTU SHALL MODULATE THE HW COIL VALVE TO MAINTAIN THE SET POINT, 20 DEG.C.
AN ECONOMIZER CYCLE SHALL BE INITIATED WHEN THE OA TEMPERATURE FALLS BELOW 13 DEG. C. AND DISABLED WHEN THE OA RISES ABOVE 13 DEG. C. THE ECONOMIZER CYCLE SHALL START THE UNIT EXHAUST FAN, WHICH SHALL MAINTAIN THE BUILDING SP AT 13 Pa THROUGH THE VFD.
THE DDC SYSTEM MUST ENABLE THE PRTU EARLY ENOUGH TO ALLOW FOR THE OPTIMUM START CYCLE.
IF THE PRTU CONTROLS CANNOT DELAY THE START OF EF-5 UNTIL THE OA DAMPER IS OPENED, PROVIDE A LIMIT SWITCH TO ALERT THE DDC SYSTEM THAT THE OA DAMPER HAS REACHED ITS MINIMUM POSITION AND THE DDC SYSTEM SHALL START EF-5.
DURING THE UNOCCUPIED MODE, THE SA FAN, AND EF-5 SHALL BE DE-ENERGIZED AND THE OA DAMPER CLOSED.
A LIMIT SWITCH SHALL INDICATE THE FULLY CLOSED STATUS OF THE OA DAMPER.
WHEN THE SPACE TEMPERATURE FALLS BELOW THE UNOCCUPIED SET POINT, THE PRTU SHALL HEAT AS IN THE OCCUPIED MODE WITH THE OA DAMPER CLOSED. ON A RISE IN SPACE TEMPERATURE, THE REVERSE SHALL OCCUR.

PRTU-5
THE PRTU SHALL BE OPERATED BY PACKAGED CONTROLS SUPPLIED BY THE UNIT MANUFACTURER.
WHEN ENABLED BY THE DDC SYSTEM, THE PRTU (SA) FAN SHALL BE ENERGIZED IF CALLED FOR BY THE PRTU CONTROLLER AND RUN CONTINUOUSLY. DURING THE OCCUPIED MODE, THE UNIT OA DAMPER SHALL OPEN FULLY AND EF-2 SHALL BE ENERGIZED.
THE OPTIMIZED START CYCLE SHALL OPERATE SIMILAR TO THE OCCUPIED MODE WITH THE OA DAMPER CLOSED AND THE EXHAUST FAN OFF.
ON A RISE IN SPACE TEMPERATURE, THE COMPRESSOR SHALL CYCLE TO MAINTAIN THE SET POINT, 24.4 DEG. C.

PRTU-5 CONT.
THE DDC SYSTEM MUST ENABLE THE PRTU EARLY ENOUGH TO ALLOW FOR THE OPTIMUM START CYCLE
IF THE PRTU CONTROLS CANNOT DELAY THE START OF EF-2 UNTIL THE OA DAMPER IS OPENED, PROVIDE A LIMIT SWITCH TO ALERT THE DDC SYSTEM THAT THE OA DAMPER HAS REACHED ITS MINIMUM POSITION AND THE DDC SYSTEM SHALL START EF-2.
ON A FALL IN SPACE TEMPERATURE, THE PRTU SHALL MODULATE THE HW COIL VALVE TO MAINTAIN THE SET POINT, 20 DEG.C.
DURING THE UNOCCUPIED MODE, THE SA FAN, AND THE EF SHALL BE DE-ENERGIZED AND THE OA DAMPER CLOSED.
WHEN THE SPACE TEMPERATURE FALLS BELOW THE UNOCCUPIED SET POINT, THE DDC SYSTEM SHALL ENABLE THE PRTU AND MODULATE THE HW COIL VALVE. ON A RISE IN SPACE TEMPERATURE, THE REVERSE SHALL OCCUR.

PRTU SAFETIES
A FREEZESTAT LOCATED DOWNSTREAM OF THE HW COIL SHALL DE-ENERGIZE THE PRTU AND ASSOCIATED EFS AND CLOSE ASSOCIATED DAMPERS WHEN ITS SET POINT, 4 DEG. C. IS REACHED.
A SMOKE DETECTOR, WHERE INDICATED, SHALL DE-ENERGIZE THE PRTU AND ASSOCIATED EFS AND CLOSE ASSOCIATED DAMPERS WHEN SMOKE IS DETECTED.
WHEN INDICATED, A HIGH PRESSURE SWITCH LOCATED IN THE SA FAN DISCHARGE SHALL DE-ENERGIZE THE SA FAN IF ITS SET POINT IS REACHED
THESE SAFETIES SHALL BE MANUALLY RESET THROUGH THE DDC SYSTEM.

PHPU-1
THE POOL HEAT PUMP UNIT SHALL BE ENABLED CONTINUOUSLY. CONTROL SEQUENCES SHALL BE DESIGNED SPECIFICALLY TO CONTROL SWIMMING POOL ENVIRONMENTAL CONDITIONS BY THE UNIT MANUFACTURER.

PHE-1
THE POOL HEAT EXCHANGER SHALL MAINTAIN A MINIMUM POOL WATER TEMPERATURE OF 28 DEG. C. BY MODULATING VALVE V-6.

SVAV-1 - 31
WHEN THE SVAV GETS A START SIGNAL FROM THE DDC SYSTEM, WITH THE PRIMARY AIR VALVE CLOSED, THE FAN SHALL START AND RUN CONTINUOUSLY. ON A RISE IN SPACE TEMPERATURE, THE PRIMARY AIR VALVE SHALL MODULATE OPEN TO MAINTAIN SET POINT. ON A FALL IN SPACE TEMPERATURE, THE PRIMARY AIR VALVE SHALL MODULATE TO ITS MINIMUM POSITION. ON A CONTINUED FALL, THE HEATING COIL CONTROL VALVE SHALL MODULATE TO MAINTAIN ITS SET POINT. WHEN THE SVAV GETS A STOP SIGNAL FROM ITS PRTU, THE FAN SHALL STOP AND THE AIR VALVE SHALL CLOSE. ON A FALL IN SPACE TEMPERATURE TO THE SET BACK SET POINT, THE FAN SHALL START AND THE HW VALVE SHALL MODULATE OPEN. ON A RISE IN SPACE TEMPERATURE, THE REVERSE SHALL OCCUR.

CV-1 THROUGH CV-5
THE CV UNITS SHALL PROVIDE CONSTANT VOLUME AIR FLOW AS SCHEDULED. THE SPACE TEMPERATURE SET POINT SHALL BE MAINTAINED BY MODULATING THE HW COIL VALVE.

EF-1, 3, 4, 10, 11, 12, 13
THE EF SHALL BE CONTROLLED BY A WALL MOUNTED LINE VOLTAGE THERMOSTAT. FOR EF-1, 3, 4, 10, ASSOCIATED DAMPER SHALL OPEN WHEN ITS EF IS ENERGIZED AND CLOSE WHEN ITS EF IS DE-ENERGIZED. THE EF SHALL NOT INTERFACE WITH THE DDC SYSTEM.

EF-14, 15, 17, 18, 19, 20
EF SHALL RUN CONTINUOUSLY AND NOT INTERFACE WITH THE DDC SYSTEM.

P-1, 1A, 2, 3, 4, 5
P-1, LEAD PUMP, SHALL BE CONTROLLED BY THE DDC SYSTEM AND SHALL RUN CONTINUOUSLY. IF FLOW FAILURE IS DETECTED BY THE DPS, P1A, LAG PUMP SHALL BE ENERGIZED. P1 AND P1A SHALL ALTERNATE AS LEAD PUMP EVERY 1000 HOURS.
P-2, 3, 5 SHALL RUN CONTINUOUSLY AND NOT INTERFACE WITH THE DDC SYSTEM.
P-4 SHALL BE CONTROLLED BY A FLOAT SWITCH AND SHALL NOT INTERFACE WITH THE DDC SYSTEM.

SC-1
THE HOT WATER SUPPLY TEMPERATURE (HWST) SHALL BE CONTROLLED THROUGH THE DDC SYSTEM. ON A FALL IN HWST, V-12 SHALL MODULATE OPEN TO MAINTAIN ITS SET POINT, 82.2 DEG. C. ON A RISE IN HWST, THE REVERSE SHALL OCCUR.

UH-1
THE UNIT HEATER SHALL BE CONTROLLED BY A WALL MOUNTED THERMOSTAT WHICH SHALL CYCLE THE FAN TO MAINTAIN ITS SET POINT, 13 DEG. C. THE UNIT HEATER SHALL NOT INTERFACE WITH THE DDC SYSTEM.

C-1
THE CONVECTOR SHALL BE CONTROLLED BY A SELF-CONTAINED THERMOSTAT WHICH SHALL CYCLE THE HW VALVE TO MAINTAIN ITS SET POINT, 21 DEG. C. THE CONVERTER SHALL NOT INTERFACE WITH THE DDC SYSTEM.

DWH-1, 2
THE DHW TANK TEMPERATURE, 60 DEG.C., SHALL BE MAINTAINED BY MODULATING STEAM VALVE OPEN ON A FALL IN TANK TEMPERATURE AND CLOSED ON A RISE. THERE SHALL BE NO INTERFACE WITH THE DDC SYSTEM.

METERING
ELECTRICAL ENERGY, HOT WATER ENERGY, COLD WATER ENERGY, AND STEAM CONSUMPTION SHALL BE RECORDED IN THE DDC SYSTEM.

CONTROL LEGEND

VFD	VARIABLE FREQUENCY DRIVE
LSPT	LIMIT STATIC PRESSURE TRANSMITTER
DPS	DIFF. PRESSURE SWITCH
CSPT	CONTROL STATIC PRESSURE TRANSMITTER
SPT	STATIC PRESSURE TRANSMITTER
DPT	DIFFERENTIAL PRESSURE TRANSMITTER
TS	TEMPERATURE SENSOR
PT	PRESSURE TRANSMITTER
MS	MOTOR STARTER
FS	FREEZESTAT
SD	SMOKE DETECTOR
DM	DAMPER MOTOR
LS	LIMIT SWITCH
CS	CURRENT SWITCH
R	RELAY
	3-WAY CONTROL VALVE
	2-WAY CONTROL VALVE
	SENSOR WELL
	AVERAGING SENSOR
M	MOTOR
	LOCAL READ-OUT
	FLOW MEASURING STATION
	DIRECTION OF FLOW
NO	NORMALLY OPEN
NC	NOMALLY CLOSED
OA	OUTSIDE AIR
OAD	OUTSIDE AIR DAMPER
OT	OVERRIDE TIMER

REVISIONS

DESCRIPTION	DATE	APPROVED
SPK		

DESIGNED & ENGINEERED BY: LANTDIV Naval Facilities Engineering Command

SEAL

APPROVED
ACTIVITY - SATISFACTORY TO
DATE
APPROVED
FOR EFD FOR COMMANDER NAVFAC
DATE

A/E	EFD
DESIGN	RDD
DRAWN	RDD
REVIEW	BDC
QC	
CHIEF	ARCH./ ENGR.
PROJECT MANAGER	DWB
FIRE PROTECTION	
BRANCH MANAGER	
DESIGN DIRECTOR	

NAVAL FACILITIES ENGINEERING COMMAND
DEPARTMENT OF THE NAVY
ATLANTIC DIVISION
NAVAL STATION
NORFOLK, VIRGINIA
NAVAL STATION
NORFOLK, VIRGINIA

WATERFRONT ATHLETIC COMPLEX

SEQUENCE OF OPERATION & LEGEND

CODE ID. NO. 80091	SIZE D
SCALE: NONE	
EFD NO. 509106	
STA. PROJ. NO. P-015	
SPEC. NO. 05-00-8090	
CONSTR. CONTR. NO. N62470-B-00-8090	
NAVFAC DRAWING NO. 4409106	
SHEET 237 OF 284	

M7.1

DRAWFORM REVISION 27 JULY 98

FILENAME: 8090M701.DWG, PLOT SCALE: 1=1, SAVED ON 10/04/99 AT 12:53, XREFS: NONE

8 7 6 5 4 3 2 1

D C B A

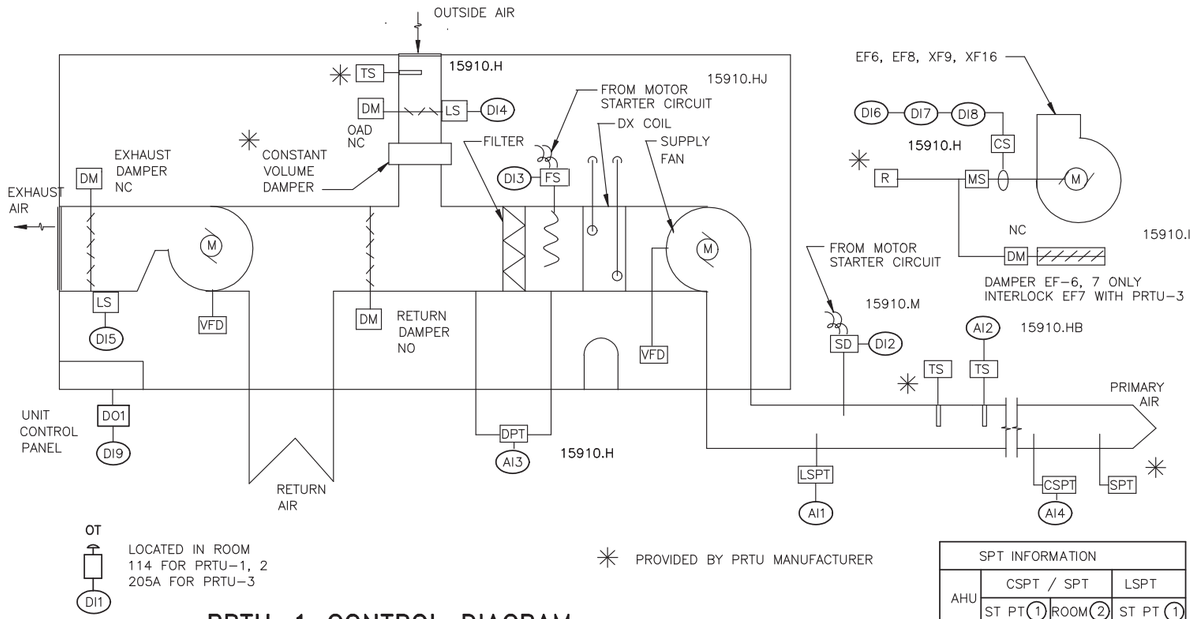

PRTU-1 CONTROL DIAGRAM

(PRTU-2, 3 SIMILAR) NOT TO SCALE

SPT INFORMATION			
AHU	CSPT / SPT		LSPT
	ST PT (1)	ROOM (2)	ST PT (1)
1	374	106	1000
2	336	104	1000
3	374	207D	1000

PRTU-1		
LOCAL DDC CONTROLLER		
INPUTS		
ANALOG	AI1	SA STATIC PRESSURE
	AI2	SA TEMP
	AI3	FILTER DELTA PRESSURE
	AI4	SA PRESSURE
DIGITAL	DI1	OVRRIDE TIMER
	DI2	SMOKE DETECTOR
	DI3	FREEZESTAT
	DI4	OAD CLOSED
	DI5	RELIEF DAMPER CLOSED
	DI6	EF-6 STATUS
	DI7	XF-9 STATUS
	DI8	XF-16 STATUS
	DI9	PRTU ALARM
OUTPUTS		
DIGITAL	DO1	UNIT ENABLE

(1) SET POINT IN PA

(2) LOCATION NEAR ROOM NUMBER INDICATED

PRTU-1 CONTROL DIAGRAM

DIV 15 MECHANICAL

15910.H	SENSORS AND INPUT HARDWARE
15910.HB	RESISTANCE TEMPERATURE DETECTORS (RTD'S)
15910.HJ	INSERTION FREEZE PROTECTION SWITCH
15910.I	DAMPERS
15910.J	VALVES
15910.M	SMOKE DETECTORS

CONTROL NOTE

1. CONTROL COMPONENTS SHOWN AND NOT CONNECTED TO THE DDC SYSTEM ARE TO BE PROVIDED BY THE PRTU MANUFACTURER.

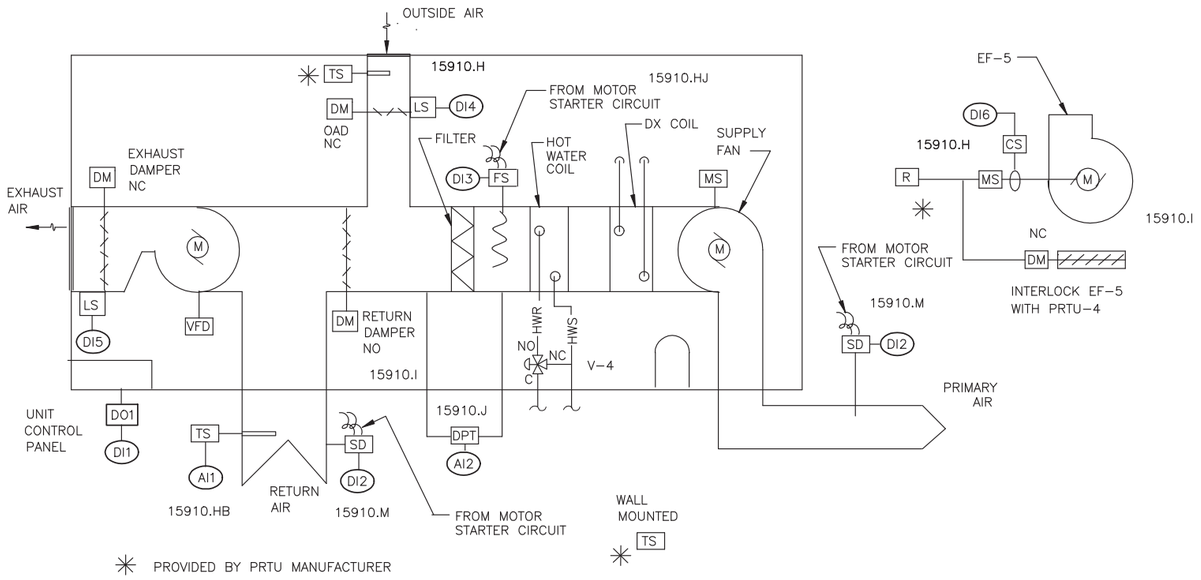

PRTU-4 CONTROL DIAGRAM

NOT TO SCALE

PRTU-4		
LOCAL DDC CONTROLLER		
INPUTS		
ANALOG	AI1	RETURN AIR TEMP
	AI2	FILTER DELTA PRESSURE
DIGITAL	DI1	PRTU ALARM
	DI2	SMOKE DETECTOR
	DI3	FREEZESTAT
	DI4	OAD CLOSED
	DI5	RELIEF DAMPER CLOSED
	DI6	EF-5 STATUS
OUTPUTS		
DIGITAL	DO1	UNIT ENABLE

REVISIONS

STM	DESCRIPTION	DATE	APPROVED

DESIGNED & ENGINEERED BY: LANTDIV NAVAL FACILITIES ENGINEERING COMMAND

SEAL

APPROVED
ACTIVITY – SATISFACTORY TO
DATE

APPROVED
FOR EFD FOR COMMANDER NAVFAC
DATE

A/E	EFD
DESIGN	RDD
DRAWN	RDD
REVIEW	BDC
QC	
CHIEF ARCH./ ENGR.	
PROJECT MANAGER	DWB
FIRE PROTECTION	
BRANCH MANAGER	
DESIGN DIRECTOR	

DEPARTMENT OF THE NAVY
NAVAL STATION
ATLANTIC DIVISION
NAVAL FACILITIES ENGINEERING COMMAND
NAVAL STATION NORFOLK, VIRGINIA
NORFOLK, VIRGINIA

WATERFRONT ATHLETIC COMPLEX

CONTROL DIAGRAMS

CODE ID. NO. 80091	SIZE D
SCALE: NONE	
EFD NO. 509107	
STA. PROJ. NO. P-015	
SPEC. NO. 05-00-8090	
CONSTR. CONTR. NO. N62470-B-00-8090	
NAVFAC DRAWING NO. 4409107	
SHEET 238 OF 284	

M7.2

DRAWFORM REVISION 27 JULY 98

FILENAME: 8090M702.DWG, PLOT SCALE: 1=1, SAVED ON 10/04/99 AT 12:54, XREFS: NONE

8 7 6 5 4 3 2 1

D C B A

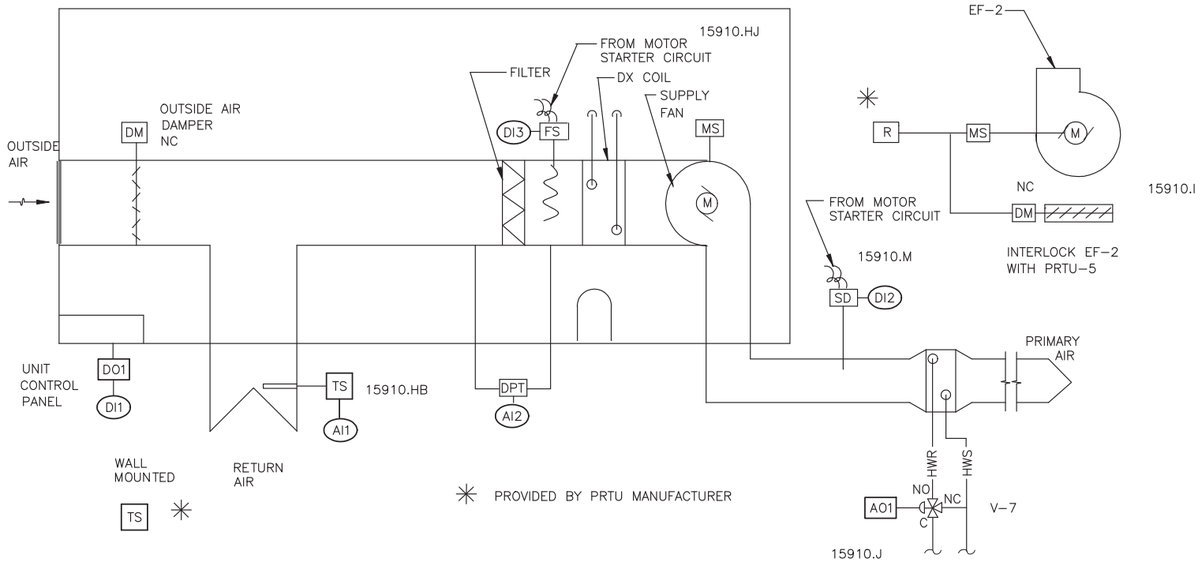

PRTU-5 CONTROL DIAGRAM

NOT TO SCALE

PRTU-5		
LOCAL DDC CONTROLLER		
INPUTS		
ANALOG	AI1	RETURN AIR TEMP
	AI2	FILTER DELTA PRESSURE
DIGITAL	DI1	PRTU ALARM
	DI2	SMOKE DETECTOR
	DI3	FREEZESTAT
OUTPUTS		
ANALOG	AO1	HW VALVE POSITION
DIGITAL	DO1	UNIT ENABLE

KEY NOTES

DIV 15 MECHANICAL

15910.HB	RESISTANCE TEMPERATURE DETECTORS (RTD'S)
15910.HJ	INSERTION FREEZE PROTECTION SWITCH
15910.I	DAMPERS
15910.J	VALVES
15910.M	SMOKE DETECTORS

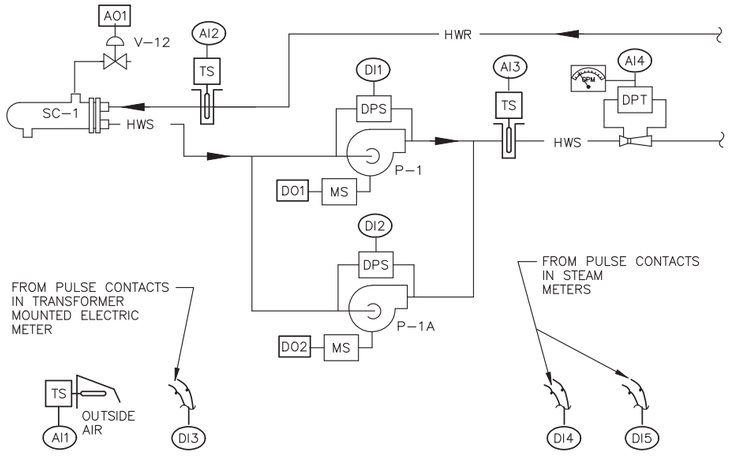

HOT WATER CONTROL DIAGRAM

NOT TO SCALE

BC		
LOCAL DDC CONTROLLER		
INPUTS		
ANALOG	AI1	OA TEMP
	AI2	HWR TEMP
	AI3	HWS TEMP
	AI4	HWS FLOW
DIGITAL	DI1	PUMP P1 STATUS
	DI2	PUMP P1A STATUS
	DI3	ELECT METER
	DI4	STEAM METER
	DI5	STEAM METER (1)
OUTPUTS		
ANALOG	AO1	V-12 POSITION
DIGITAL	DO1	PUMP P1 START
	DO2	PUMP P1A START

NOTE (1) TRAVEL OFFICE & LAUNDRY OPTION

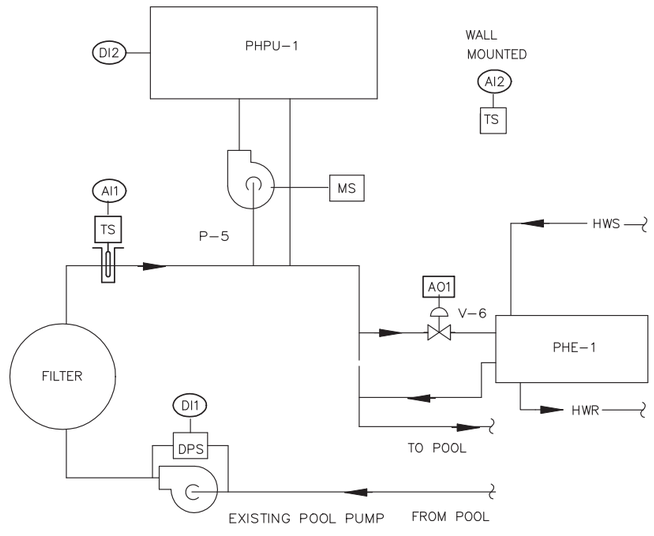

SENSORS PROVIDED BY THE PHPU-1 MANUFACTURER ARE NOT SHOWN

POOL HEATING CONTROL DIAGRAM

NOT TO SCALE

BC		
LOCAL DDC CONTROLLER		
INPUTS		
ANALOG	AI1	POOL WATER TEMP
	AI2	SPACE TEMP
DIGITAL	DI1	EXIST POOL PUMP STATUS
	DI2	PHPU ALARM
OUTPUTS		
ANALOG	AO1	V-15 POSITION

REVISIONS

STM	DESCRIPTION	DATE	APPROVED

DESIGNED & ENGINEERED BY: LANTDIV Naval Facilities Engineering Command

SEAL

APPROVED
ACTIVITY – SATISFACTORY TO
DATE

APPROVED
FOR EFD FOR COMMANDER NAVFAC
DATE

A/E	EFD
DESIGN	RDD
DRAWN	RDD
REVIEW	BDC
QC	
CHIEF	ARCH./ ENGR.
PROJECT MANAGER	DWB
FIRE PROTECTION	
BRANCH MANAGER	
DESIGN DIRECTOR	

DEPARTMENT OF THE NAVY
NAVAL FACILITIES ENGINEERING COMMAND
ATLANTIC DIVISION
NAVAL STATION NORFOLK, VIRGINIA

WATERFRONT ATHLETIC COMPLEX

CONTROL DIAGRAMS

CODE ID. NO. 80091	SIZE D
SCALE:	NONE
EFD NO.	509108
STA. PROJ. NO.	P-015
SPEC. NO.	05-00-8090
CONTR. CONTR. NO.	N62470-B-00-8090
NAVFAC DRAWING NO.	4409108
SHEET	239 OF 284

M7.3

DRAWFORM REVISION 27 JULY 98

FILENAME: 8090M703.DWG, PLOT SCALE: 1=1, SAVED ON 10/04/99 AT 12:54, XREFS: NONE

8 7 6 5 4 3 2 1

D C B A

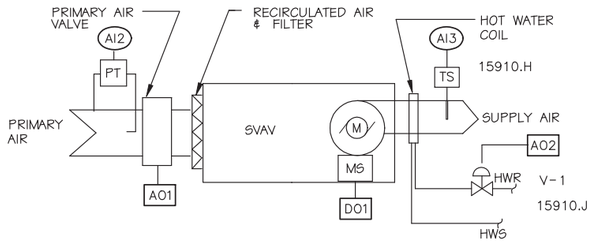

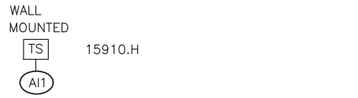

SVAV-1 CONTROL DIAGRAM

(SVAV-2 THRU 31 SIMILAR) NOT TO SCALE

SVAV-1		
LOCAL DDC CONTROLLER		
INPUTS		
ANALOG	AI1	SPACE TEMP
	AI2	PRIMARY AIR VELOCITY
	AI3	SA TEMP
OUTPUTS		
ANALOG	AO1	AIR VALVE POSITION
	AO2	HW VALVE POSITION
DIGITAL	DO1	SA FAN START

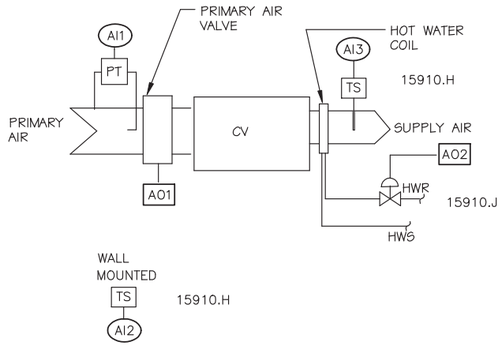

CV-1 CONTROL DIAGRAM

(CV-2 THRU 5 SIMILAR) NOT TO SCALE

CV-1		
LOCAL DDC CONTROLLER		
INPUTS		
ANALOG	AI1	PRIMARY AIR VELOCITY
	AI2	SPACE TEMP
	AI3	SA TEMP
OUTPUTS		
ANALOG	AO1	AIR VALVE POSITION
	AO2	HW VALVE POSITION

CONTROL NOTES

1. DDC CONTROLLER SHALL BE MOUNTED ON THE SVAV UNITS AND CV UNITS AND BE PROVIDED BY THE UNIT MANUFACTURER.

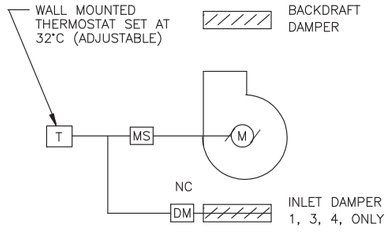

EF-1 CONTROL DIAGRAM

(EF-3, 4, 11, 12, 13 SIMILAR) NOT TO SCALE

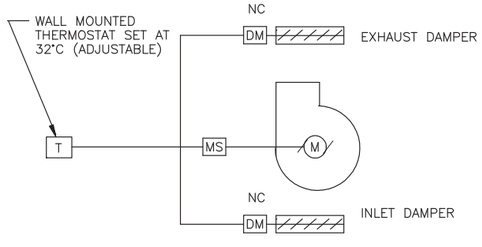

EF-10 CONTROL DIAGRAM

NOT TO SCALE

KEY NOTES

DIV 15 MECHANICAL

15910.A	DIRECT DIGITAL CONTROLLERS
15910.E	WORKSTATION
15910.F	NOTEBOOK COMPUTER
15910.H	SENSORS AND INPUT HARDWARE
15910.J	VALVES

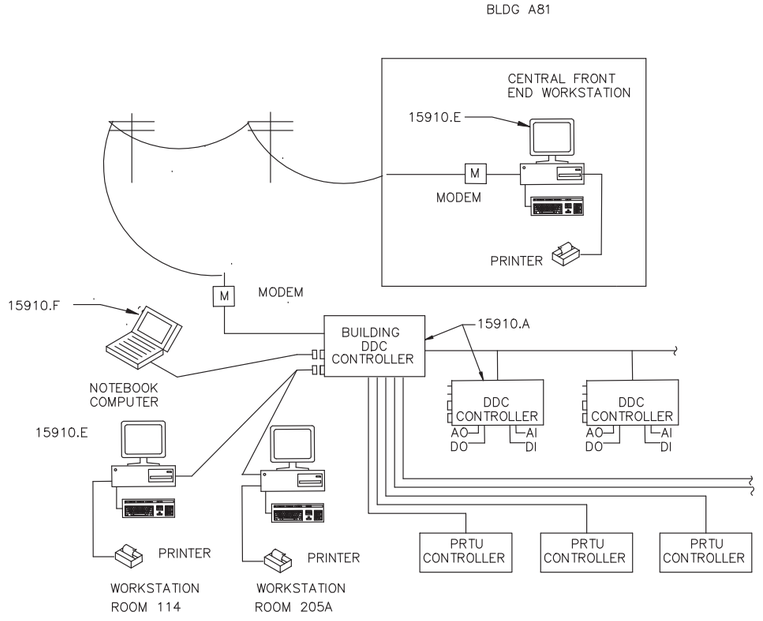

DDC SYSTEM DIAGRAM

NOT TO SCALE

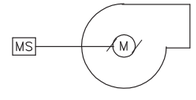

EF-14 CONTROL DIAGRAM

(EF-15, 17, 18, 19, 20 SIMILAR) NOT TO SCALE

REVISIONS

NO.	DESCRIPTION	DATE	APPROVED

DESIGNED & ENGINEERED BY: LANTDIV Naval Facilities Engineering Command

SEAL

APPROVED

ACTIVITY - SATISFACTORY TO

DATE

APPROVED

FOR EFD FOR COMMANDER NAVFAC

DATE

A/E	EFD
DESIGN	RDD
DRAWN	RDD
REVIEW	BDC
QC	
CHIEF	ARCH./ ENGR.
PROJECT MANAGER	DWB
FIRE PROTECTION	
BRANCH MANAGER	
DESIGN DIRECTOR	

DEPARTMENT OF THE NAVY
NAVAL FACILITIES ENGINEERING COMMAND
ATLANTIC DIVISION
NAVAL STATION NORFOLK, VIRGINIA

WATERFRONT ATHLETIC COMPLEX

CONTROL DIAGRAMS

CODE ID. NO. 80091	SIZE D
SCALE: NONE	
EFD NO. 509109	
STA. PROJ. NO. P-015	
SPEC. NO. 05-00-8090	
CONSTR. CONTR. NO. N62470-B-00-8090	
NAVFAC DRAWING NO. 4409109	
SHEET 240 OF 284	

M7.4

DRAWFORM REVISION 27 JULY 98

FILENAME: 8090M704.DWG, PLOT SCALE: 1=1, SAVED ON 10/04/99 AT 12:55, XREFS: NONE

8 7 6 5 4 3 2 1

D C B A

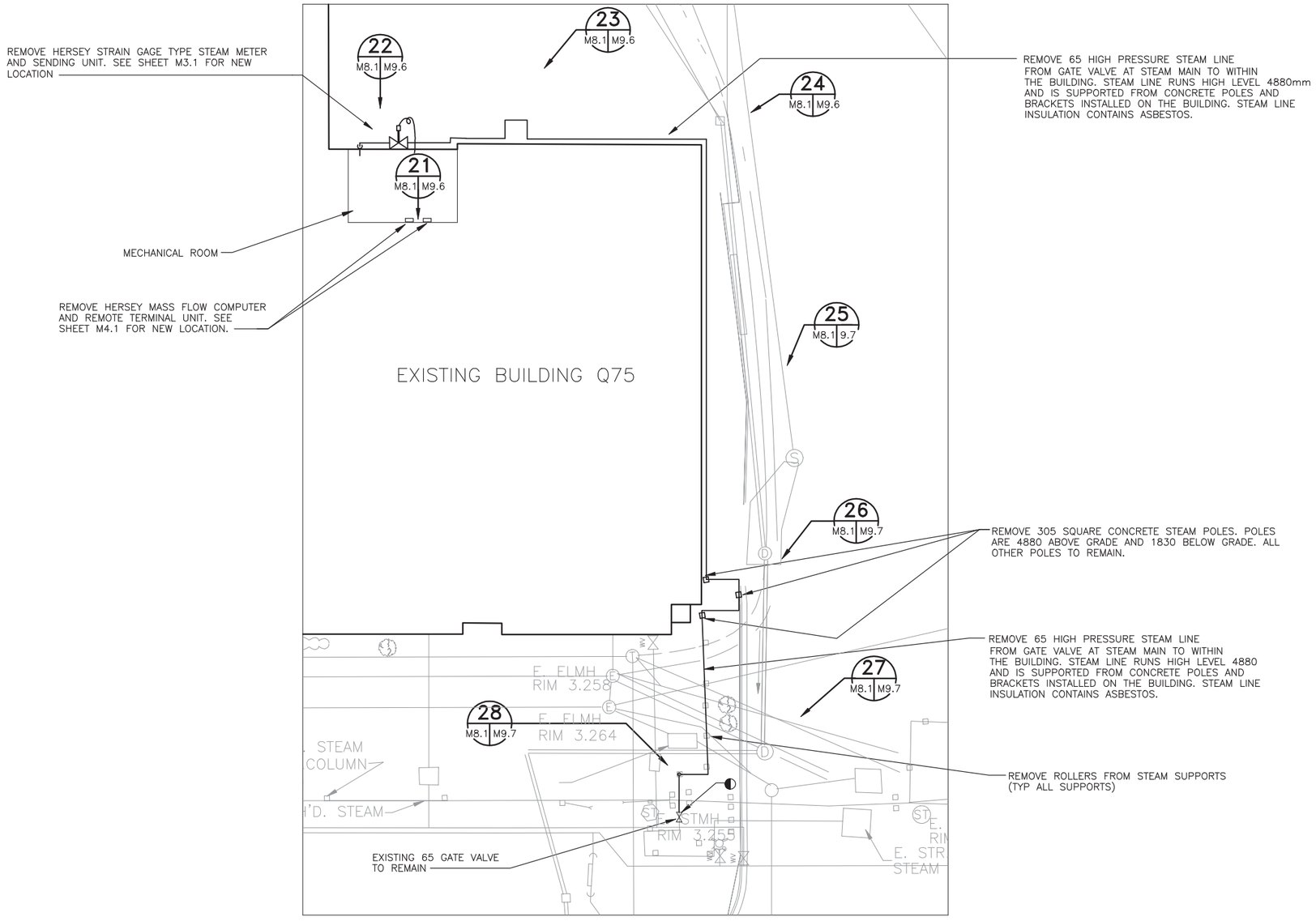

STEAM SITE DEMOLITION

SCALE: 1 = 200

GRAPHIC SCALE

1:200 0 5000 1000 20000mm

REVISIONS

SYM	DESCRIPTION	DATE	APPROVED

DESIGNED & ENGINEERED BY: LANTDIV NAVAL FACILITIES ENGINEERING COMMAND

SEAL

APPROVED
ACTIVITY – SATISFACTORY TO
DATE
APPROVED
FOR EFD FOR COMMANDER NAVFAC
DATE

A/E	EFD
DESIGN	JTI
DRAWN	JTI
REVIEW	BDC
QC	
CHIEF	ARCH./ ENGR.
PROJECT MANAGER	DWB
FIRE PROTECTION	
BRANCH MANAGER	
DESIGN DIRECTOR	

DEPARTMENT OF THE NAVY
NAVAL STATION
ATLANTIC DIVISION
NAVAL FACILITIES ENGINEERING COMMAND
NORFOLK, VIRGINIA

NAVAL STATION
NORFOLK, VIRGINIA

WATERFRONT ATHLETIC COMPLEX

STEAM SITE DEMOLITION

CODE ID. NO. 80091	SIZE D
SCALE:	AS NOTED
EFD NO.	509110
STA. PROJ. NO.	P-015
SPEC. NO.	05-00-8090
CONSTR. CONTR. NO.	N62470-B-00-8090
NAVFAC DRAWING NO.	4409110
SHEET	241 OF 284

M8.1

DRAWFORM REVISION 27 JULY 98

FILENAME: 8090M801.DWG, PLOT SCALE: 1=1, SAVED ON 10/06/99 AT 13:28, XREFS: U:\PROJECTS\ACTIVE\8090 WATERFRONT ATHLETIC\DRAWINGS\402\8090SMOD.DWG
FILENAME: 8090M801.DWG, PLOT SCALE: 1=1, SAVED ON 10/06/99 AT 13:28, XREFS: U:\PROJECTS\ACTIVE\8090 WATERFRONT ATHLETIC\DRAWINGS\405\8090CX01.DWG, U:\PROJECTS\ACTIVE\8090 WATERFRONT ATHLETIC\DRAWINGS\402\8090SMOD.DWG

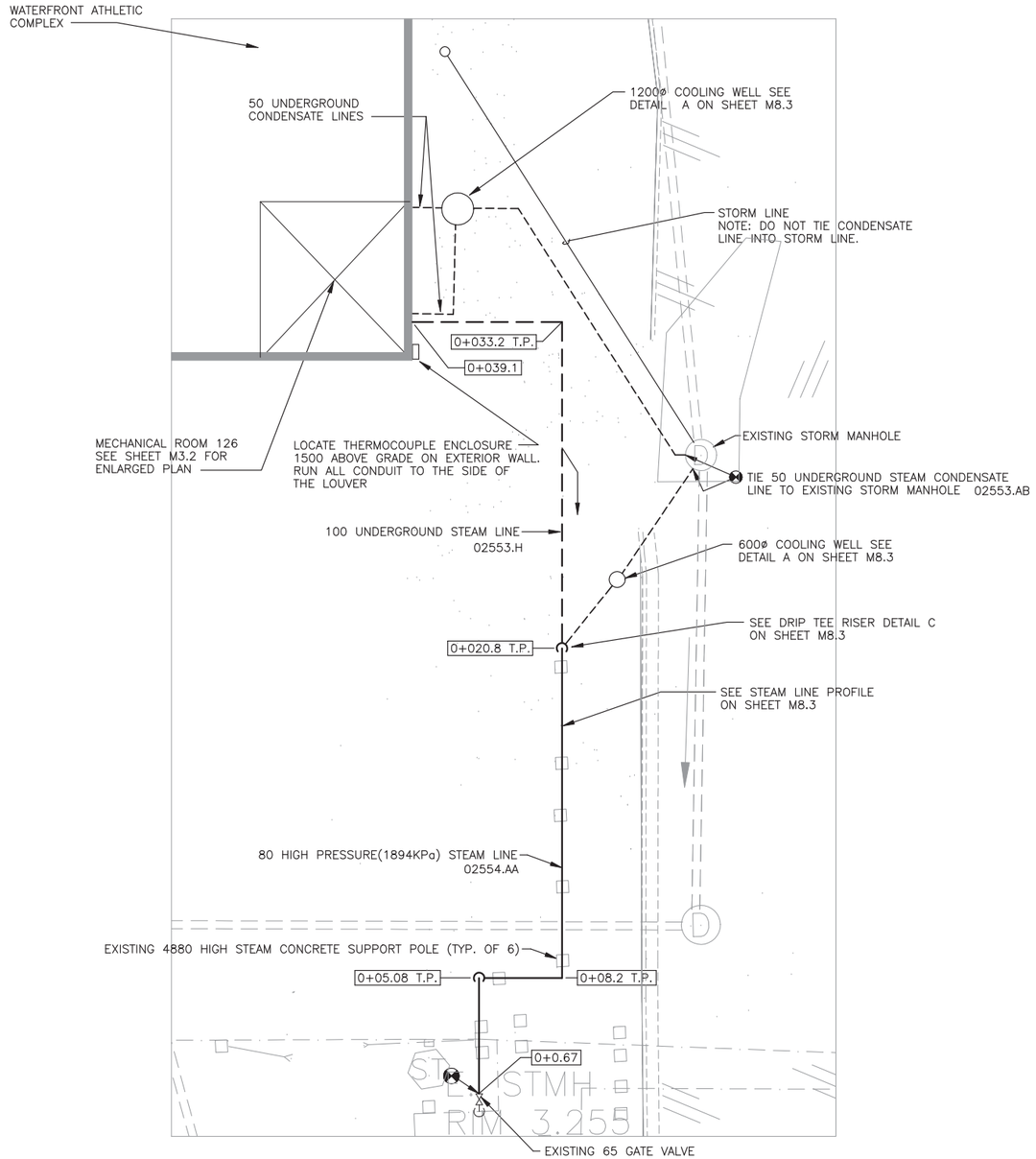

STEAM SITE PLAN

SCALE: 1 = 100

KEYNOTES

DIV 02 SITEWORK

02553.AB	PIPING, CONDENSATE
02553.H	BURIED PIPING SYSTEM
02554.AA	PIPING, STEAM

KEYPLAN

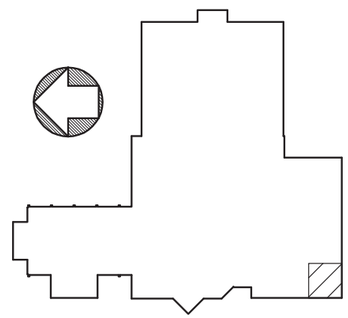

GRAPHIC SCALE

1:100 0 1000 5000 10000mm

REVISIONS

SYM	DESCRIPTION	DATE	APPROVED

DESIGNED & ENGINEERED BY: LANTDIV NAVAL FACILITIES ENGINEERING COMMAND

SEAL

APPROVED

ACTIVITY – SATISFACTORY TO

DATE

APPROVED

FOR EFD FOR COMMANDER NAVFAC

DATE

A/E	EFD
DESIGN	JTI
DRAWN	JTI
REVIEW	BDC
QC	
CHIEF ARCH./ ENGR.	
PROJECT MANAGER	DWB
FIRE PROTECTION	
BRANCH MANAGER	
DESIGN DIRECTOR	

DEPARTMENT OF THE NAVY
NAVAL STATION
ATLANTIC DIVISION
NAVAL FACILITIES ENGINEERING COMMAND
NORFOLK, VIRGINIA

NAVAL STATION
WATERFRONT ATHLETIC COMPLEX
NORFOLK, VIRGINIA

STEAM SITE PLAN

CODE ID. NO. 80091	SIZE D
SCALE: AS NOTED	
EFD NO. 509111	
STA. PROJ. NO. P-015	
SPEC. NO. 05-00-8090	
CONSTR. CONTR. NO. N62470-B-00-8090	
NAVFAC DRAWING NO. 4409111	
SHEET 242 OF 284	

M8.2

DRAWFORM REVISION 27 JULY 98

FILENAME: 8090M802.DWG, PLOT SCALE: 1=1, SAVED ON 10/06/99 AT 12:42, XREFS: U:\PROJECTS\ACTIVE\8090 WATERFRONT ATHLETIC\DRAWINGS\402\8090SMOD.DWG
U:\PROJECTS\ACTIVE\8090 WATERFRONT ATHLETIC\DRAWINGS\405\8090CX01.DWG,

8 7 6 5 4 3 2 1

D C B A

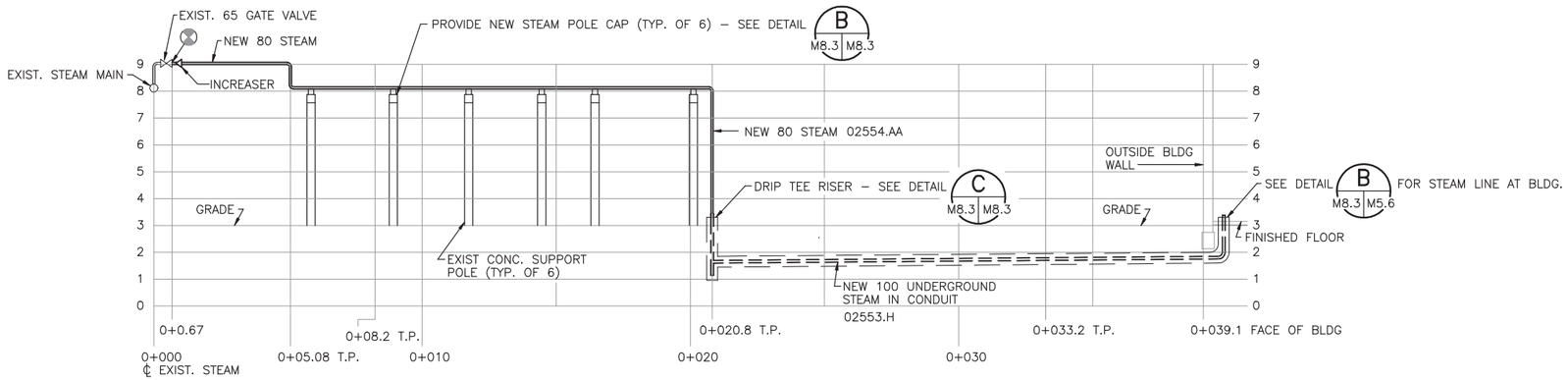

STEAM LINE PROFILE

SCALE: HORIZ. 1:100
VERT. 1:10

KEYNOTES

DIV 02 SITEWORK

02553.AA	PIPING, STEAM
02553.CB	VALVES, CONDENSATE
02553.DC	PIPING ACCESSORIES, TRAPS
02553.H	BURIED PIPING SYSTEM
02554.AA	PIPING, STEAM
02554.AB	PIPING, CONDENSATE

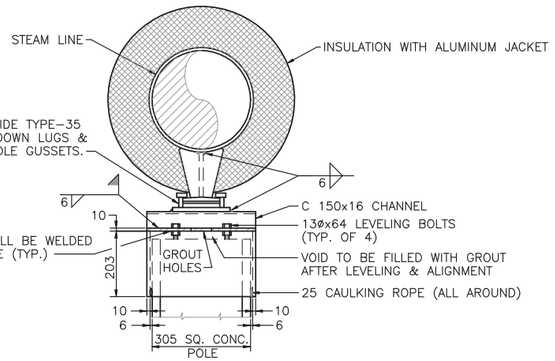

TRAVERSE SECTION

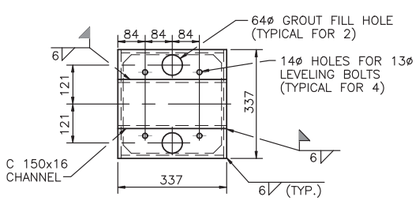

PLAN VIEW

NOTE:
ALL STEAM SUPPORT STEEL WORK SHALL BE HOT DIPPED GALVANIZED AFTER FABRICATION.

STEAM POLE CAP DETAIL

NOT TO SCALE — B M8.3 M8.3

	"A DIM" mm	"B DIM" mm
600 ø COOLING WELL	610	305
1200 ø COOLING WELL	1829	1524

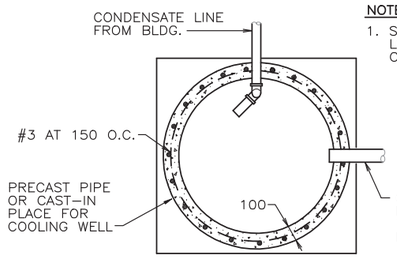

PLAN

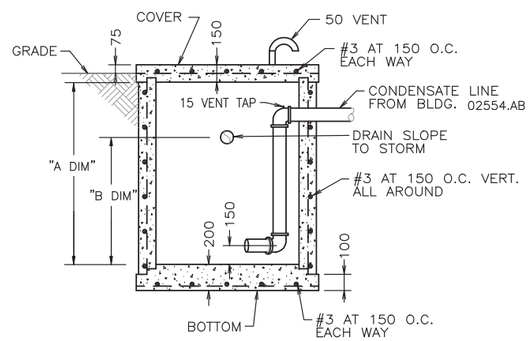

ELEVATION

NOTE:
1. SEE SHEET M8.2 FOR LOCATION OF COOLING WELLS.

COOLING WELL DETAIL

NO SCALE — A M8.2 M8.3

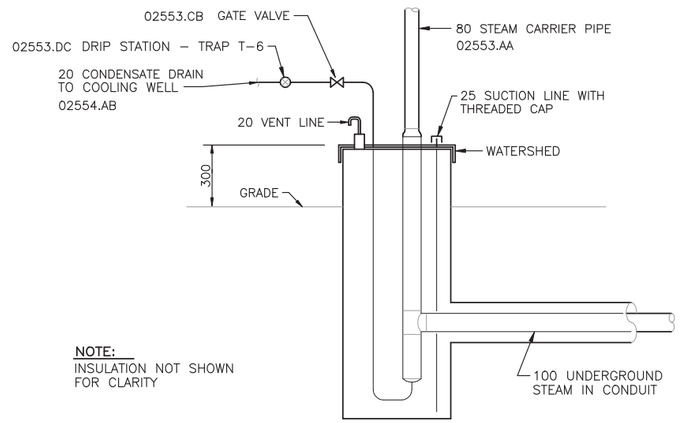

NOTE:
INSULATION NOT SHOWN FOR CLARITY

DRIP TEE RISER ASSEMBLY

NO SCALE — C M8.2 M8.3

GRAPHIC SCALES

1:10 — 0 1 5 10m

1:100 — 0 10 50 100m

REVISIONS

SYM	DESCRIPTION	DATE	APPROVED

DESIGNED & ENGINEERED BY: LANTDIV NAVAL FACILITIES ENGINEERING COMMAND

SEAL

APPROVED
ACTIVITY – SATISFACTORY TO
DATE
APPROVED
FOR EFD FOR COMMANDER NAVFAC
DATE

A/E	EFD
DESIGN	WWH
DRAWN	WWH
REVIEW	BDC
QC	
CHIEF ARCH./ ENGR.	
PROJECT MANAGER	DWB
FIRE PROTECTION	
BRANCH MANAGER	
DESIGN DIRECTOR	

DEPARTMENT OF THE NAVY — NAVAL STATION
ATLANTIC DIVISION — NAVAL FACILITIES ENGINEERING COMMAND — NORFOLK, VIRGINIA
NAVAL STATION NORFOLK, VIRGINIA
WATERFRONT ATHLETIC COMPLEX
STEAM LINE PROFILE

CODE ID. NO. 80091	SIZE D
SCALE:	AS NOTED
EFD NO.	509112
STA. PROJ. NO.	P–015
SPEC. NO.	05–00–8090
CONSTR. CONTR. NO.	N62470–00–B–8090
NAVFAC DRAWING NO.	4409112
SHEET	243 OF 284

M8.3

FILENAME: 8090M803.DWG, PLOT SCALE: 1" = 100', SAVED ON 10/06/99 AT 13:09, XREFS: NONE

DRAWFORM REVISION 05 APRIL 99

SP-12 Record Drawings

REVISIONS			
SYM.	DESCRIPTION	DATE	APPROVED
A	REVISED AS-BUILT	15-8-86	[illegible]

DESIGN CONDITIONS			
	SUMMER		WINTER
	DB	WB	DB
OUTSIDE	91°F	76°F	22°F
INSIDE	78°F	65°F	68°F

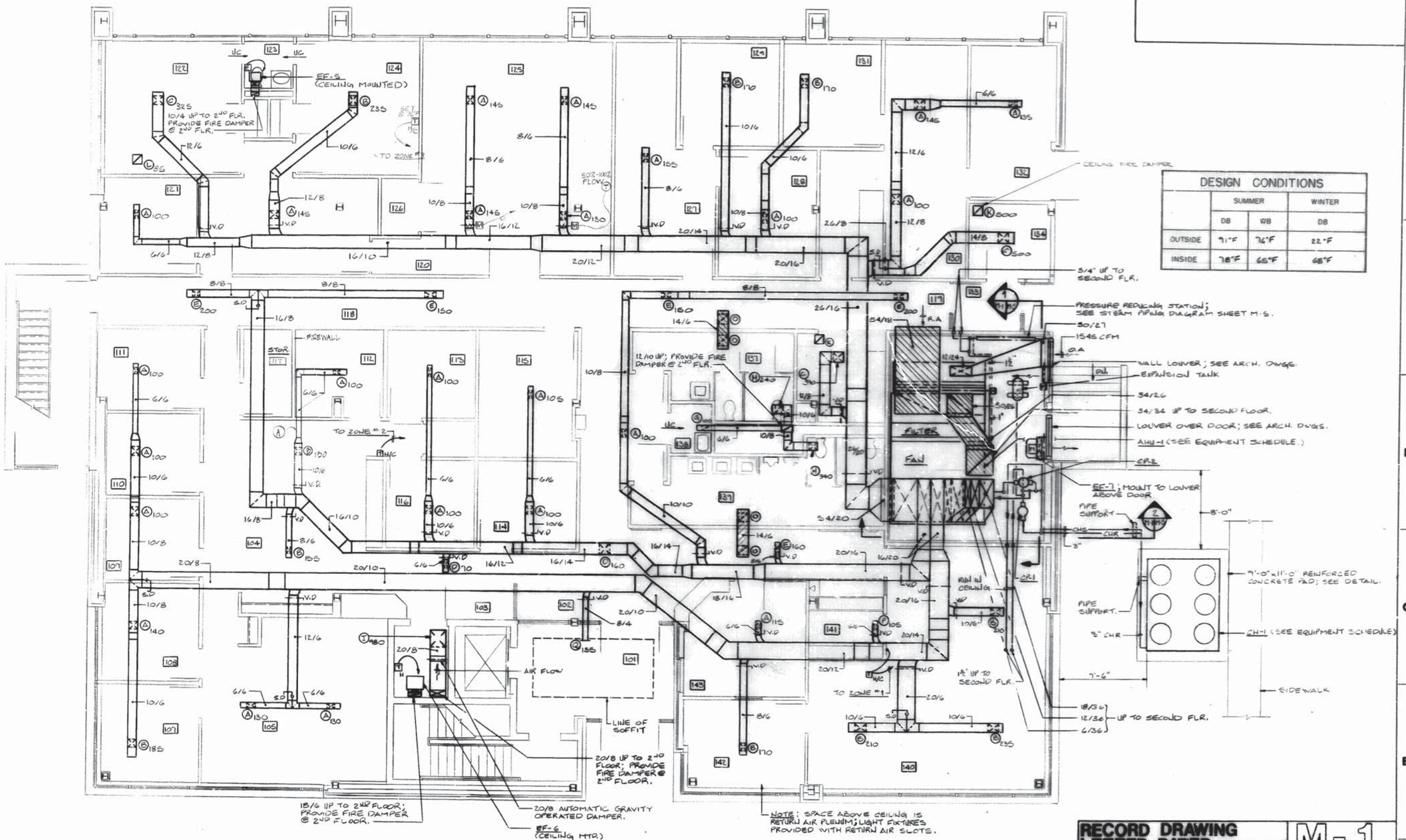

MECHANICAL - FIRST FLOOR PLAN

SCALE: 1/4" = 1'-0"

NOTE: SEE REFLECTIVE CEILING PLAN FOR EXACT LOCATION OF DIFFUSERS, REGISTERS AND GRILLES.

GRAPHIC SCALE

1/4" = 1'-0" 0 1' 5' 10' 15'

RECORD DRAWING LETTER DATED 14 OCT 1986

M-1

OLD DOMINION ENGINEERING, INC.
Consulting Engineers
Virginia Beach, Virginia

WILLIAM S. COWDRI
No. 21185
COMMONWEALTH OF VIRGINIA
PROFESSIONAL ENGINEER
83-281

ANDREW S. FINK & ASSOCIATES, INC.
Architects and Planners
Virginia Beach, Virginia

DEPARTMENT OF THE NAVY — NAVAL FACILITIES ENGINEERING COMMAND
ATLANTIC DIVISION
NAVAL STATION — NORFOLK, VA.
NAVAL AIR STATION — NORFOLK, VA.
ADMINISTRATIVE BUILDING, NAVAL AIR RESERVE UNIT
MECHANICAL FIRST FLOOR PLAN

ORD SHEET NO.	225861	
JOB ORDER NO.	SF 3014	
ENG. PROJ. NO.	FY 85 ALTER P-632	
DES. CONST.	TRANS. ALT.	
PROJ. MGR.	CH. ARCH. ENGR.	
ORD SYD	92-CSP	
DET. MGR.	DES. DR.	
APPROVED	DATE	
ACTIVITY-SATISFACTORY TO	DATE	
APPROVED FOR CONSTRUCTION	15 Jul 83	

SCALE	COST ENGR. NO.	NAVFAC DRAWING NO.
F	80091	412596
SCALE NOTED	SPEC. DS-83-3014	CONSTR. CONTR. NO. N62470-82-B-3014

SHEET 35 OF 47

REVISIONS			
SYM.	DESCRIPTION	DATE	APPROVED
A	REVISED AS-BUILT	03-11-86	EF

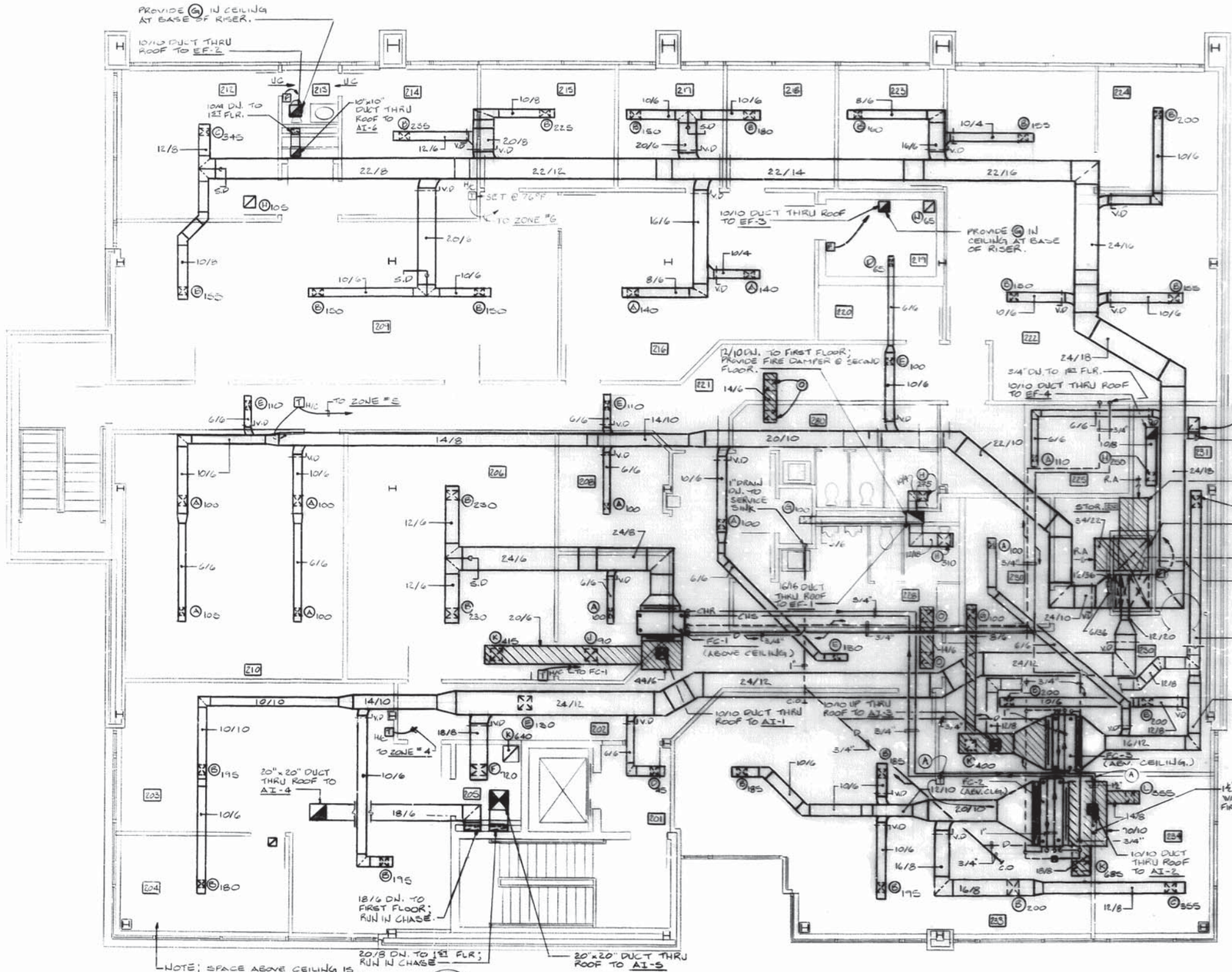

MECHANICAL - SECOND FLOOR PLAN

SCALE: 1/4" = 1'-0"

NOTE: SEE REFLECTIVE CEILING PLAN FOR EXACT LOCATION OF DIFFUSERS, REGISTERS AND GRILLES.

GRAPHIC SCALE

1/4" = 1'-0" 0 1' 5' 10' 15'

LEGEND

- HIGH PRESSURE STEAM PIPING
- HIGH PRESSURE CONDENSATE RETURN PIPING
- LOW PRESSURE STEAM PIPING
- LOW PRESSURE CONDENSATE RETURN PIPING
- D — AIR CONDITIONING CONDENSATE DRAIN PIPING
- CHS — CHILLED WATER SUPPLY PIPING
- CHR — CHILLED WATER RETURN PIPING
- COMBINATION BALANCING AND SHUT-OFF VALVE
- BALANCING VALVE
- GATE VALVE
- GLOBE VALVE
- CHECK VALVE
- STRAINER W/BLOW OFF CONNECTION
- 3-WAY CONTROL VALVE
- (A)100 GRILLE, REGISTER, OR DIFFUSER MARK - SEE SCHEDULE (CFM NOTED)
- EF-1 EXHAUST FAN MARK
- SUPPLY DUCT SECTION - SHADED MEANS ROOF PENETRATION
- RETURN OR EXHAUST DUCT SECTION - SHADED MEANS ROOF PENETRATION
- FIRE DAMPER W/ACCESS DOOR
- NIGHT THERMOSTAT MTD. @ 60" AFF
- HEATING AND COOLING T'STAT MTD @ 60" AFF
- FAN SWITCH - FLUSH MOUNTED, 48" AFF
- ELBOW WITH TURNING VANES
- SPLITTER DAMPER
- LINED DUCTWORK - INSIDE CLEAR DIMENSIONS NOTED
- VOLUME DAMPER (MANUAL)
- VOLUME DAMPER (MOTORIZED)
- FLEXIBLE DUCT CONNECTION
- DOOR LOUVER - SEE ARCHITECTURAL DRAWINGS
- UC UNDER CUT DOOR - SEE ARCHITECTURAL DRAWINGS
- SLOPE PIPING IN DIRECTION INDICATED
- POINT OF CONNECTION-NEW TO EXISTING
- TIME CLOCK-MOUNTED 60" AFF
- BY-PASS TIMER SWITCH-MOUNTED 60" AFF
- THERMOMETER
- PRESSURE GAGE
- UNION OR FLANGE
- MANUAL AIR VENT
- VG VACUUM GAGE
- STEAM TRAP
- PIPE ANCHOR
- PIPE FLEX CONNECTION
- CH CHILLER UNIT
- CP CIRCULATING PUMP
- FC FAN COIL UNIT
- AHU AIR HANDLING UNIT
- AI AIR INTAKE
- SMOKE DETECTOR

RECORD DRAWING LETTER DATED 14 OCT 1986 — **M-2**

OLD DOMINION ENGINEERING, INC. Consulting Engineers Virginia Beach, Virginia

WILLIAM S. COWDELL No. 12185 PROFESSIONAL ENGINEER 83-281

ANDREW S. FINK & ASSOCIATES, INC. Architects and Planners Virginia Beach, Virginia

BFD DWG. NO.	225962
JOB ORDER NO.	SF3818
STA. PROJ. NO.	FY 85 NCNR P-632
DES. DWG	DRWN. JLC
PROJ. MGR WSC	CH. ARCH/ENGR.
BFD RVD	EP. CDR
DR. MGR.	DES. DIR.
APPROVED	DATE
ACTIVITY-SATISFACTORY TO	
APPROVED	DATE 16 JUL 85
FOR: CDR, NAVFAC	

DEPARTMENT OF THE NAVY — NAVAL FACILITIES ENGINEERING COMMAND
ATLANTIC DIVISION
NAVAL STATION NORFOLK, VA.
NAVAL AIR STATION NORFOLK, VA.

ADMINISTRATIVE BUILDING, NAVAL AIR RESERVE UNIT

MECHANICAL SECOND FLOOR PLAN

SIZE	CODE IDENT. NO.	NAVFAC DRAWING NO.
F	80091	4125962

CONSTR. CONTR. NO. N62470-83-B-3014

SCALE NOTED SPEC. 85-83-3014 SHEET 36 OF 47

REVISIONS			
SYM.	DESCRIPTION	DATE	APPROVED
A	REVISED AS-BUILT	10-31-86	RD

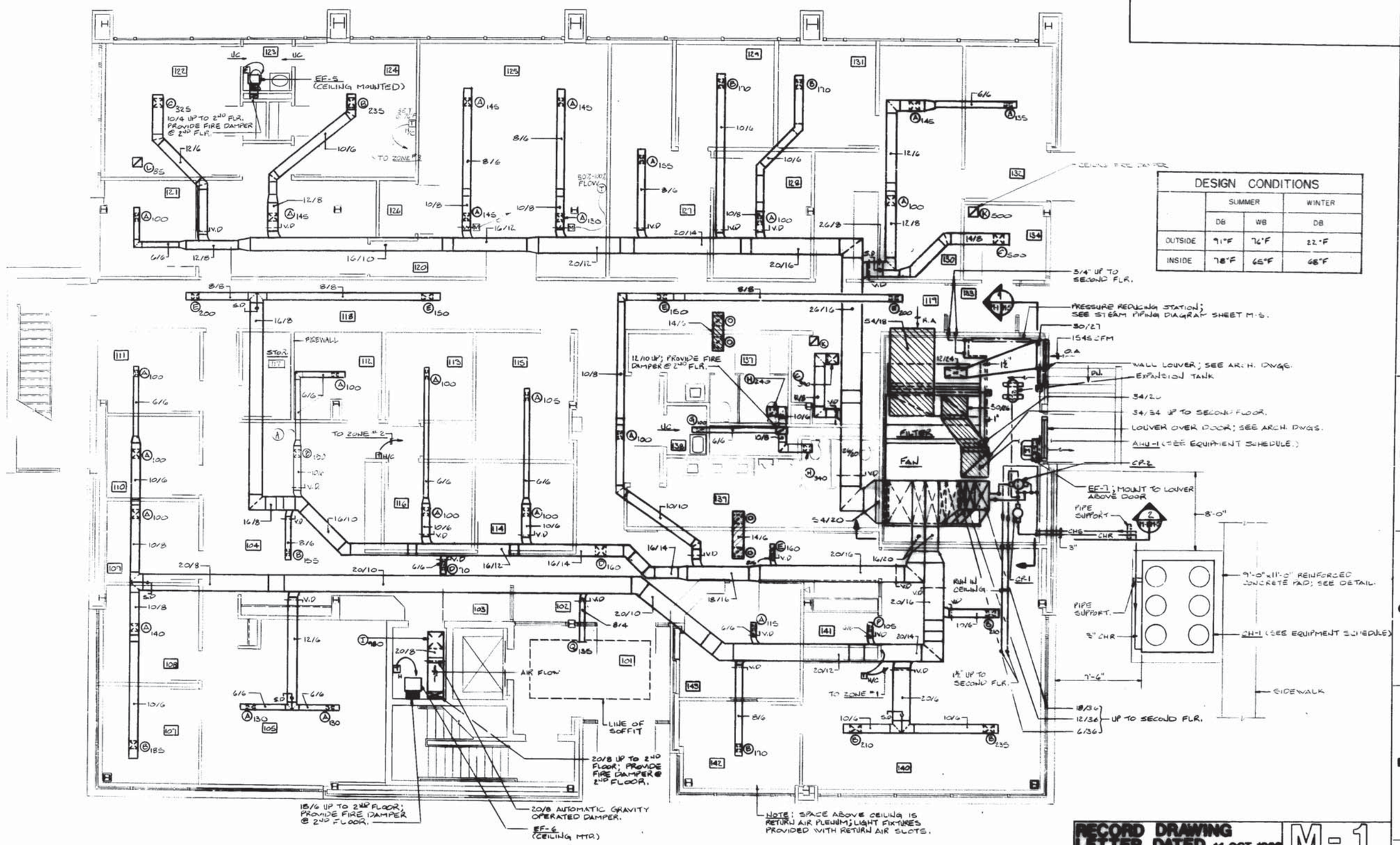

DESIGN CONDITIONS			
	SUMMER		WINTER
	DB	WB	DB
OUTSIDE	91°F	76°F	22°F
INSIDE	78°F	65°F	68°F

MECHANICAL-FIRST FLOOR PLAN

SCALE: 1/4"=1'-0"

NOTE: SEE REFLECTIVE CEILING PLAN FOR EXACT LOCATION OF DIFFUSERS, REGISTERS AND GRILLES.

GRAPHIC SCALE

1/4" = 1'-0" 0 1' 5' 10' 15'

RECORD DRAWING LETTER DATED 14 OCT 1986

M-1

Consulting Engineers
Virginia Beach, Virginia

COMMONWEALTH OF VIRGINIA
WILLIAM S. COWDELL
No. 12785
83-281
PROFESSIONAL ENGINEER

DEPARTMENT OF THE NAVY — NAVAL FACILITIES ENGINEERING COMMAND
ATLANTIC DIVISION
NAVAL STATION — NORFOLK, VA.
NAVAL AIR STATION — NORFOLK, VA.
ADMINISTRATIVE BUILDING, NAVAL AIR RESERVE UNIT
MECHANICAL FIRST FLOOR PLAN

F — 80091 — 4125961

SCALE NOTED — SHEET 35 OF 47

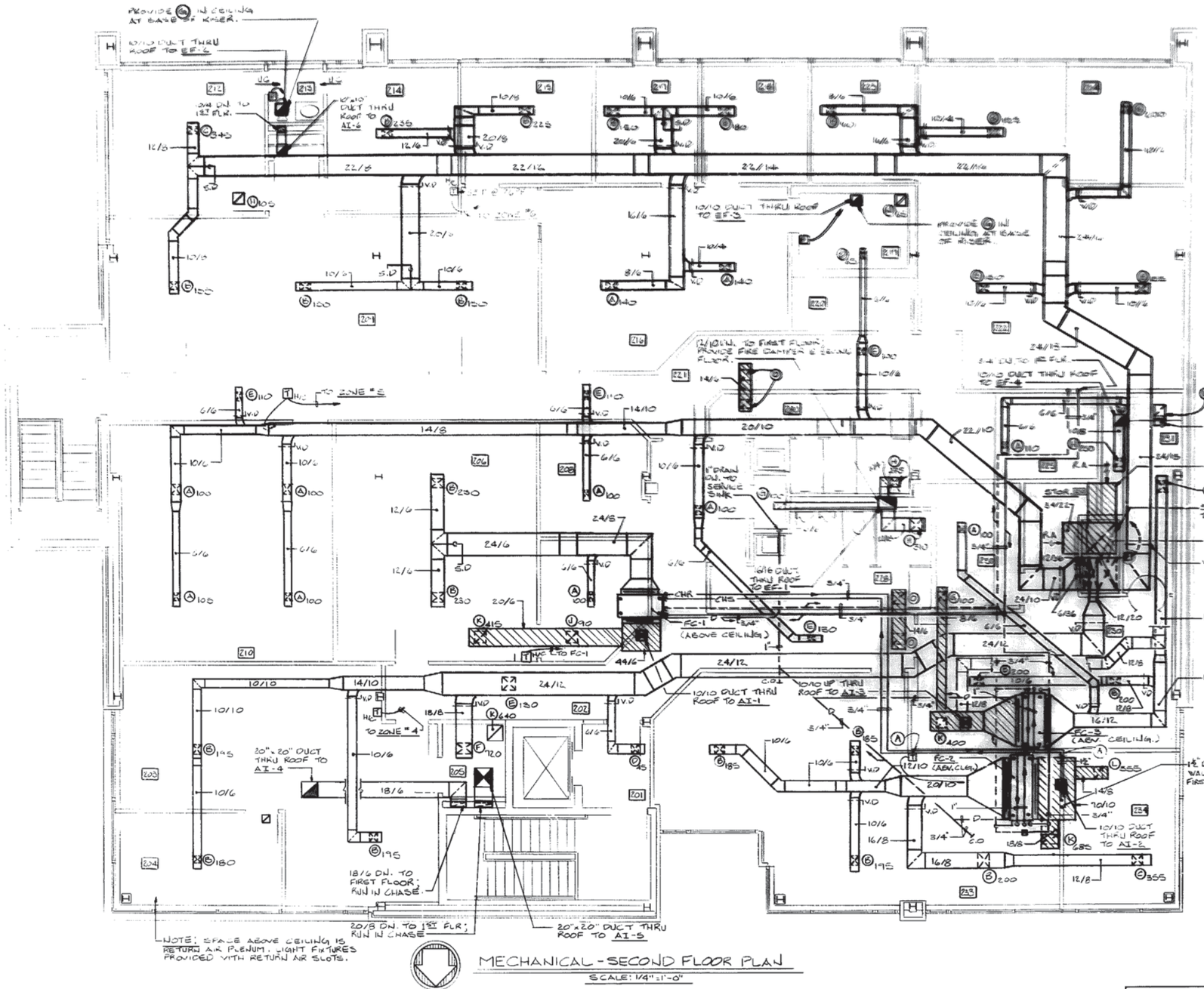

MECHANICAL - SECOND FLOOR PLAN

SCALE: 1/4" = 1'-0"

NOTE: SEE REFLECTIVE CEILING PLAN FOR EXACT LOCATION OF DIFFUSERS, REGISTERS AND GRILLES.

GRAPHIC SCALE

1/4" = 1'-0" 0 1' 5' 10' 15'

LEGEND

- HIGH PRESSURE STEAM PIPING
- HIGH PRESSURE CONDENSATE RETURN PIPING
- LOW PRESSURE STEAM PIPING
- LOW PRESSURE CONDENSATE RETURN PIPING
- HIGH CONDITIONING CONDENSATE DRAIN PIPING
- CHILLED WATER SUPPLY PIPING
- CHILLED WATER RETURN PIPING
- CONDENSATION BALANCING AND SHUT-OFF VALVE
- BALANCING VALVE
- GATE VALVE
- GLOBE VALVE
- CHECK VALVE
- STRAINER & BLOW OFF CONNECTION
- 3-WAY CONTROL VALVE
- GRILLE, REGISTER, OR DIFFUSER MARK - SEE SCHEDULE (CFM NOTED)
- EF-11 EXHAUST FAN MARK
- SUPPLY DUCT SECTION - SHADED MEANS ROOF PENETRATION
- RETURN OR EXHAUST DUCT SECTION - SHADED MEANS ROOF PENETRATION
- FIRE DAMPER W/ACCESS DOOR
- RIGHT THERMOSTAT MTD. @ 60" AFF
- HEATING AND COOLING T'STAT MTD @ 60" AFF
- FAN SWITCH - FLUSH MOUNTED, 60" AFF
- ELBOW WITH TURNING VANES
- SPLITTER DAMPER
- LINED DUCTWORK - INSIDE CLEAR DIMENSIONS NOTED
- VOLUME DAMPER (MANUAL)
- VOLUME DAMPER (AUTOMATIC)
- FLEXIBLE DUCT CONNECTION
- DOOR LOUVER - SEE ARCHITECTURAL DRAWINGS
- UNDER CUT DOOR - SEE ARCHITECTURAL DRAWINGS
- SLOPE PIPING IN DIRECTION INDICATED
- POINT OF CONNECTION-NEW TO EXISTING
- TIME CLOCK-MOUNTED 50" AFF
- BY-PASS TIMED SWITCH-MOUNTED 60" AFF
- THERMOMETER
- PRESSURE GAGE
- UNION OR FLANGE
- MANUAL AIR VENT
- VACUUM GAGE
- STEAM TRAP
- PIPE ANCHOR
- PIPE FLEX CONNECTION
- CH CHILLER UNIT
- CP CIRCULATING PUMP
- FC FAN COIL UNIT
- AHU AIR HANDLING UNIT
- AI AIR INTAKE
- S SMOKE DETECTOR

RECORD DRAWING LETTER DATED 14 OCT 1986 — **M-2**

ANDREW S. FINK & ASSOCIATES, INC. Architects and Planners, Virginia Beach, Virginia

DEPARTMENT OF THE NAVY — NAVAL FACILITIES ENGINEERING COMMAND
ATLANTIC DIVISION
NAVAL STATION — NORFOLK, VA.

NAVAL AIR STATION — NORFOLK, VA.
ADMINISTRATIVE BUILDING, NAVAL AIR RESERVE UNIT

MECHANICAL SECOND FLOOR PLAN

SIZE	CODE IDENT. NO.	NAVFAC DRAWING NO.
F	80091	4125962

CONSTR. CONTR. NO. N62470-83-B-3014

SCALE NOTED — SPEC. 05-83-3014 — SHEET 36 OF 47

OLD DOMINION ENGINEERING, INC. Consulting Engineers, Virginia Beach, Virginia

COMMONWEALTH OF VIRGINIA — WILLIAM S. COWDELL No. 12185 — 83-281 — PROFESSIONAL ENGINEER

ACTIVITY-SATISFACTORY TO
APPROVED — DATE 15 Jul 85
FOR USE FOR COMMANDER NAVFAC

REVISIONS			
SYM.	DESCRIPTION	DATE	APPROVED
(A)	REVISED AS-BUILT	29 JUL 96	ZB

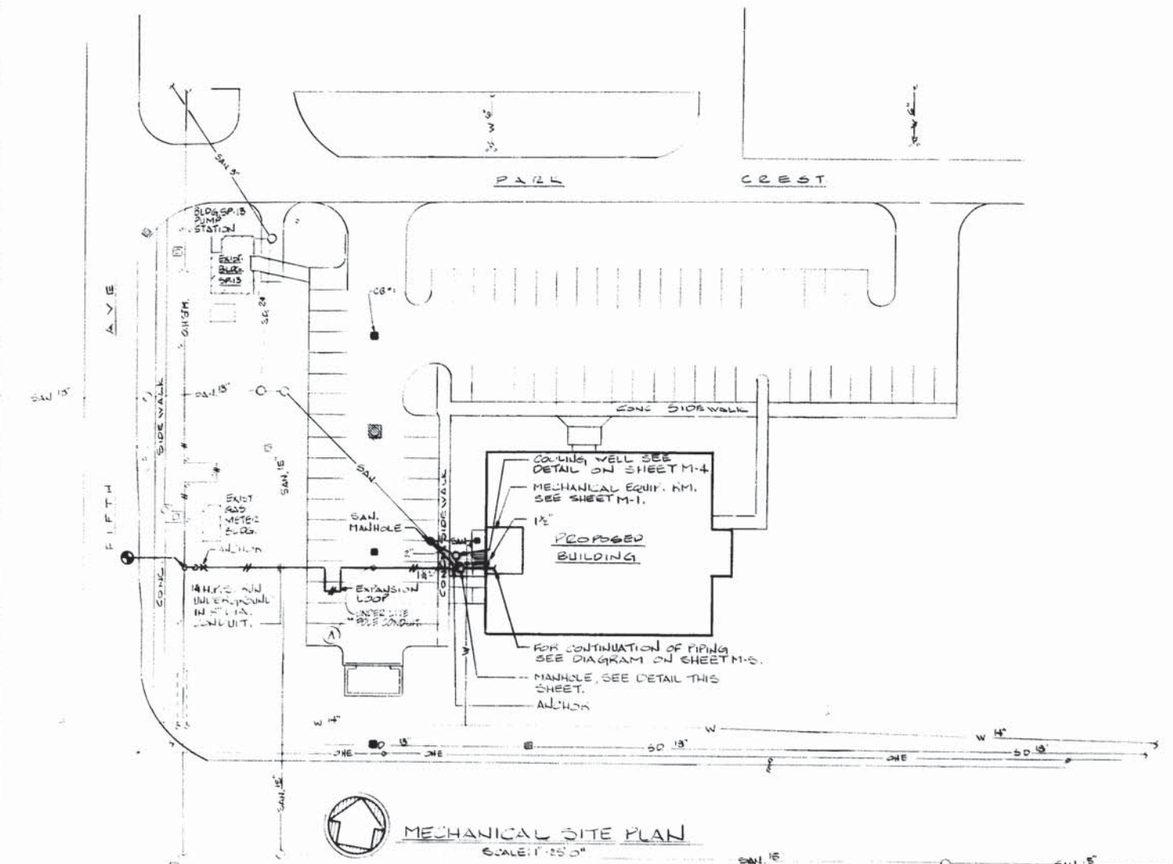

MECHANICAL SITE PLAN

SCALE: 1"=25'-0"

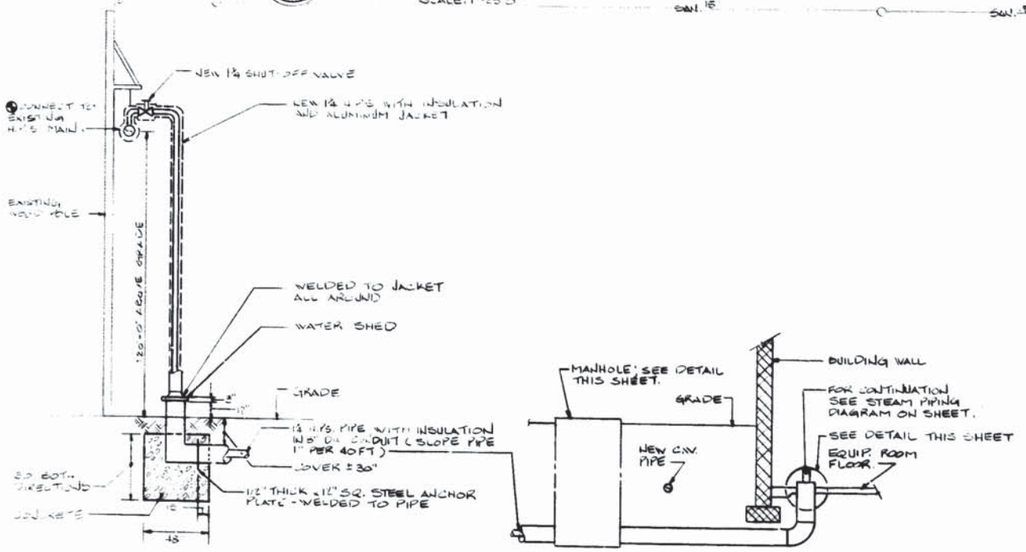

ELEVATION OF UNDERGROUND STEAM PIPE

NO SCALE

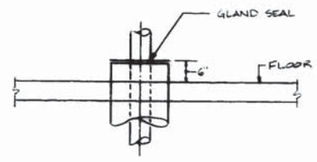

ENTRY DETAIL

NO SCALE

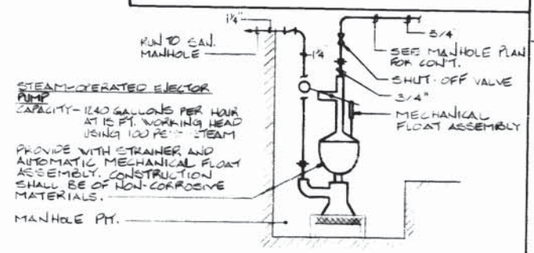

INSTALLATION OF EJECTOR PUMP DETAIL

NO SCALE

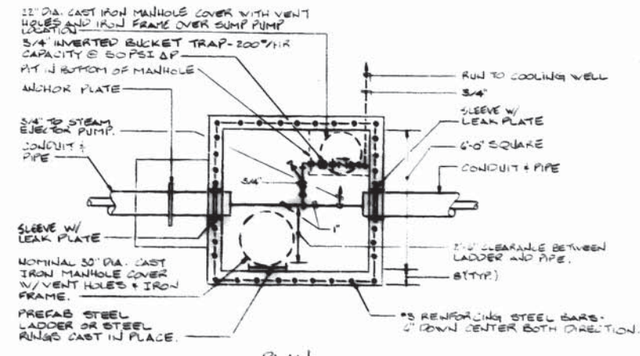

PLAN

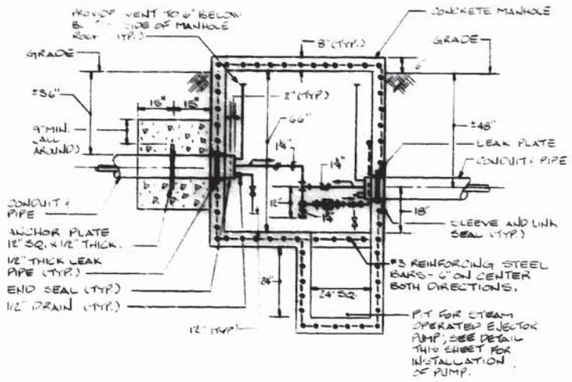

SECTION

MANHOLE DETAIL

NO SCALE

GRAPHIC SCALES

1"=25'-0" 0 25' 50' 100'

1/2"=1'-0" 0 0.5' 1' 2' 3' 4' 5' 6' 7'

RECORD DRAWING LETTER DATED 14 OCT 1999

M-3

DEPARTMENT OF THE NAVY	NAVAL FACILITIES ENGINEERING COMMAND
NAVAL STATION	ATLANTIC DIVISION NORFOLK, VA.
NAVAL AIR STATION	NORFOLK, VA.
ADMINISTRATIVE BUILDING, NAVAL AIR RESERVE UNIT	
MECHANICAL - EXTERIOR STEAM	
SIZE F	CODE IDENT. NO. 80091
NAVFAC DRAWING NO. 4125983	
CONTR. CONTR. NO. N62470-93-B-3016	
SCALE NOTED	DATE 06-03-1994
SHEET 37 OF 42	

Architects & Engineers, Inc. — Architects and Planners — Virginia Beach, Virginia

Consulting Engineers — Virginia Beach, Virginia

COMMONWEALTH OF VIRGINIA — WILLIAM S. COWELL — No. 12185 — 83-231

15 Jul 96

FAN COIL UNIT SCHEDULE

COOLING: ENT. WATER TEMP. - 45°F, TEMP. RISE - 8°F MIN., ENT. AIR - 80°F. DB & 67°F WB
HEATING - 15 PSIG SATURATED STEAM, ENT. AIR - 60°F
UNIT VOLTAGE: 120 VOLTS 1 PHASE, 60 HERTZ

MARK	ARRANGEMENT	MINIMUM COOLING CAP. MBH SEN.	TOTAL	MIN. HEATING CAP. MBH	COOLING GPM	P.D. FT. H_2O	OUTSIDE AIR CFM	FAN MOTOR CFM	WATTAGE	EXTR. STATIC PRESS.	REMARKS
FC-1	HORIZONTAL CONCEALED	7.8	14.9	3.4	3.2	12.0	55	560	90	0.14	
FC-2		26.9	38.8	13.6	9.8	13.3	80	1120	165	0.20	
FC-3		22.2	30.5	4.5	6.4	5.6	50	915		0.18	

NOTES
① PROVIDE WITH FAN SECTION, CHILLED WATER COOLING COIL, STEAM HEATING COIL, THROWAWAY FILTERS AND VIBRATION ISOLATORS.

AIR INTAKE / RELIEF HOOD SCHEDULE

MARK	MAXIMUM AIR FLOW (CFM)	ROOF OPENING (INCHES)	THROAT AREA (S.F.)	MIN. INTAKE FREE AREA (S.F.)	MAX. STATIC PRESS. DROP (H_2O)	MATERIAL	REMARKS
AI-1	55	10 x 10	0.69	3.64	0.10	ALUM.	①
AI-2	80	↓	↓	↓	↓		↓
AI-3	50						
AI-4	980	20x20	2.77	7.7	0.05		① & ②
AI-5	980	20x20	2.77	13.6	0.05		①
AI-6	100	10x10	0.69	3.64	0.10	↓	① & ②

NOTES
① PROVIDE WITH BIRDSCREEN AND PRE-FAB ROOF CURB.
② USE FOR RELIEF OF AIR TO OUTDOORS FROM EXHAUST FAN.

EXHAUST FAN SCHEDULE

MARK	APPLICATION	TYPE	CFM	STATIC PRESSURE	FAN DATA APPROX RPM	FAN DATA FFM TIP SPEED	FAN DATA MAX. ZONES	MOTOR DATA HP	MOTOR DATA WATTS	VOLTAGE	PHASE	REMARKS
EF-1	JANITOR CLOSET & TOILET EXHAUST	CENTRIFUGAL BELT-DRIVE	1365	1/2"	820	3500	8.5	1/4	—	120	1	①&②
EF-2	TOILET 213 EXHAUST	CENTRIFUGAL DIRECT-DRIVE	100	0.1"	850	1780	1.1	1/15				①&⑤
EF-3	VAULT 219 EXHAUST		140	↓	1050	2190	1.8	↓				①&③
EF-4	DARKROOM 232 EXHAUST		250	1/8"	1200	2820	2.3	1/10	↓			①&③
EF-5	TOILET 123 EXHAUST	CENTRIFUGAL CLG. MTD	100	1/8	1550	—	3.5	—	100			④&③
EF-6	E.-EV EQUIP RM 106 EXHAUST		150	0.10	1050	↓	6.0	↓	440			④&⑤
EF-7	MECH. ROOM EXHAUST	WALL MTD PROPELLER DIRECT-DRIVE	940	1/4"	1150	—	—	1/8	—	↓	↓	⑤&⑥

NOTES:
① PROVIDE WITH PRE-FAB ROOF CURB, BIRDSCREEN, AUTOMATIC GRAVITY BACKDRAFT DAMPER AND DISCONNECT SWITCH WITHIN FAN HOUSING.
② OPERATE FROM TIMECLOCK.
③ OPERATE FROM WALL SWITCH.
④ PROVIDE WITH CEILING GRILLE, AUTOMATIC GRAVITY BACKDRAFT DAMPER AND MEANS TO DISCONNECT MOTOR WITHIN FAN HOUSING.
⑤ PROVIDE WALL MOUNTED THERMOSTAT TO START FAN WHEN SPACE TEMPERATURE IS ABOVE 104°F AND TO STOP FAN WHEN SPACE TEMPERATURE DROPS BELOW 104°F.
⑥ PROVIDE WITH AUTOMATIC BACKDRAFT DAMPER.

GRILLE, REGISTER AND DIFFUSER SCHEDULE

MARK	APPLICATION	OPPOSED BLADE DAMPER	DIRECTION OF BLOW	SIZE	ΔP, INCH H_2O (INCLUDES DPR.)	REMARKS
A	CEILING SUPPLY AIR DIFFUSER	YES	4-WAY	6x6	0.12	
B	↓	↓	↓	9x9	0.08	
C			↓	12x12	↓	
D			3-WAY	6x6	0.12	
E			2-WAY	↓	↓	
F	PERFORATED CLG. SUPPLY AIR DIFFUSER	NO	2-WAY CORNER	16"ø	0.11	TO FIT 24" x 24" CLG. GRID SYSTEM
G	EXHAUST/RETURN AIR REGISTER	YES	—	6x6	0.10	BARS SET @ 45°
H	↓	↓	↓	10x10	↓	↓
I	INTAKE AIR GRILLE	—		20x20		
J	CEILING RETURN AIR REGISTER	YES		6x6		BARS SET @ 45°
K	↓	↓	↓	14x14	↓	↓
L				12x12		
M	CEILING SUPPLY DIFFUSER	↓	3-WAY	↓	0.08	↓
N	CEILING RETURN AIR REGISTER	↓	—	6x6	0.10	BARS SET @ 45°
O	CEILING RETURN AIR GRILLE	—	↓	10x10	↓	↓
P	CEILING SUPPLY AIR DIFFUSER	YES	1-WAY	6x6		
Q	SIDEWALL SUPPLY AIR REGISTER	YES	DOUBLE DEFLECT.	8x4	0.15	

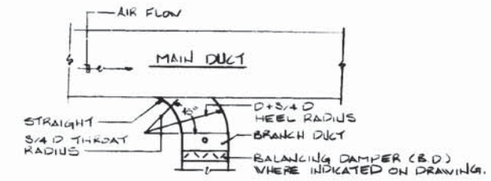

TYPICAL BRANCH CONNECTION DETAIL
NO SCALE

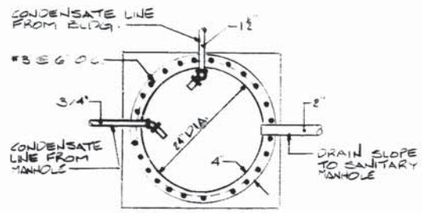

PLAN

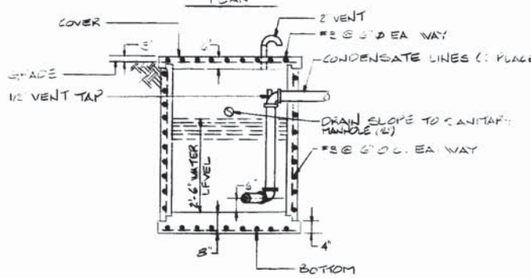

ELEVATION

COOLING WELL DETAIL
NO SCALE

AIR HANDLING UNIT SCHEDULE

MARK	FAN TOTAL CFM	FAN HP	FAN ESP	COOLING COIL DATA TOTAL MBH	COOLING COIL DATA SENS MBH	COOLING COIL DATA ENT AIR DB	COOLING COIL DATA ENT AIR WB	COOLING COIL DATA GPM	HEATING COIL DATA MBH	HEATING COIL DATA LBS OF STEAM	OUTSIDE AIR CFM	TYPE UNIT	REMARKS
AHU-1	12,085	10	3/4	339.2	307.0	80	66.6	67.9	145.1	193.1	1545	3 DECK BLOW THRU MULTI-ZONE	①②③④

NOTES:
① PROVIDE WITH FAN SECTION, 3 DECK DAMPER SECTION, COIL SECTION, MEDIUM EFFICIENCY BAG TYPE WITH THROWAWAY PRE-FILTERS, MIXING BOX SECTION WITH M.O. DAMPERS, MOTOR, V-BELT DRIVE AND VIBRATION ISOLATORS.
② ELECTRICAL SERVICE - 480V, 3 PHASE, 60 HERTZ.
③ COOLING COIL CAPACITY BASED ON: EAT = 80°F AND LAT = 55° F; MAX. COIL FACE VELOCITY = 550 FPM; AIR SIDE Δ P = 0.4" W.G. MAX.; WATER SIDE Δ P = 20 FT. OF WATER (MAX)
④ HEATING COIL CAPACITY BASED ON 15 PSIG SATURATED STEAM; MAX. COIL FACE VELOCITY = 900 FPM; P = 0.15" W.G. MAX.

ZONE SCHEDULE FOR AHU-1

	ZONE NUMBER 1	2	3	4	5	6	TOTAL
CFM PER ZONE	2069	2000	3236	1465	1120	2800	12,085
PERCENT OF TOTAL CFM	16.3	15.8	25.5	11.5	8.8	22.1	100.0
NUMBER OF ZONE SECTIONS USED	2	2	4	2	1	3	14

EQUIPMENT SCHEDULE:
1. AIR-COOLED CHILLER UNIT: CH-1
CAPACITY - 49.2 TONS COOLING WITH ENTERING WATER TEMP. = 55°F; LEAVING WATER TEMPERATURE = 44°F; AMBIENT AIR TEMP = 95°F; 107.3 GPM WATER FLOW AT MAX. PRESSURE DROP OF 10 FT. OF WATER; 9.5 EER
UNLOADING - 2 STAGES (MINIMUM)
ELECTRICAL - 480V, 3-PHASE, 60 HERTZ
2 COMPRESSORS AT 44.9 RATED LOAD AMPS EACH
6 CONDENSER FANS AT 1.8 FLA EACH
CONTROLS - .50 KW
PROVIDE WITH TEMPERATURE CONTROLS, HEAD PRESSURE CONTROLS FOR OPERATION DOWN TO 10°F, SINGLE SOURCE ELECTRICAL HOOK-UP, WATER FLOW SWITCH, ANTI-CYCLE CONTROLS, HOT GAS BYPASS AND LOAD LIMIT THERMOSTAT.

CIRCULATING PUMP SCHEDULE

MARK	CAPACITY GPM	HEAD FT. OF WATER	HORSE-POWER	MAX. RPM	MINIMUM PERCENT EFFICIENCY	TYPE	APPLICATION	ELEC. DATA VOLTS	ELEC. DATA PHASE	REMARKS
CP-1	107.3	45	2	1750	60	INLINE CENTRIFUGAL	PRIMARY CHILL WATER	480	3	
CP-2	81.9	44	2	↓	58	↓	SECONDARY CHILL WATER	↓	↓	

REVISIONS

SYM.	DESCRIPTION	DATE	APPROVED

RECORD DRAWING
LETTER DATED 14 OCT 1986

M-4

DEPARTMENT OF THE NAVY — NAVAL FACILITIES ENGINEERING COMMAND
ATLANTIC DIVISION
NAVAL STATION — NORFOLK, VA.
NAVAL AIR STATION — NORFOLK, VA.
ADMINISTRATIVE BUILDING, NAVAL AIR RESERVE UNIT
MECHANICAL SCHEDULES

Consulting Engineers, Virginia Beach, Virginia
COMMONWEALTH OF VIRGINIA — WILLIAM S. COWELL — No. 12165 — PROFESSIONAL ENGINEER

SIZE	CODE IDENT. NO.	NAVFAC DRAWING NO.	
F	80091	4125958	
CONTR. CONTR. NO. N62470-83-B-3014			
SCALE NONE	SPEC. 05-83-3014	SHEET 38 OF 47	

ACTIVITY SATISFACTORY TO — 15 JUL 85

53-281

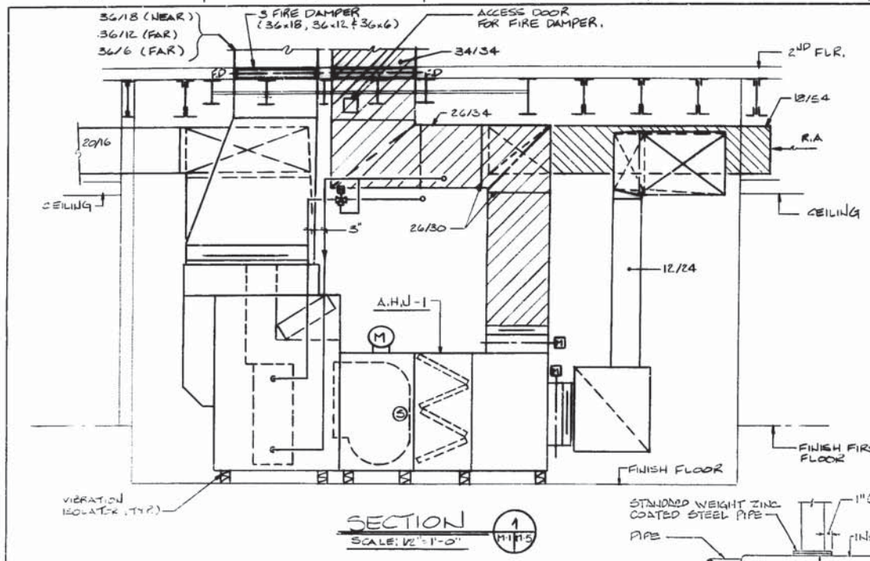

SECTION 1 M-5
SCALE: 1/2"=1'-0"

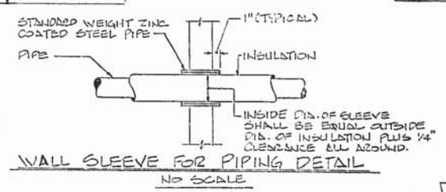

WALL SLEEVE FOR PIPING DETAIL
NO SCALE

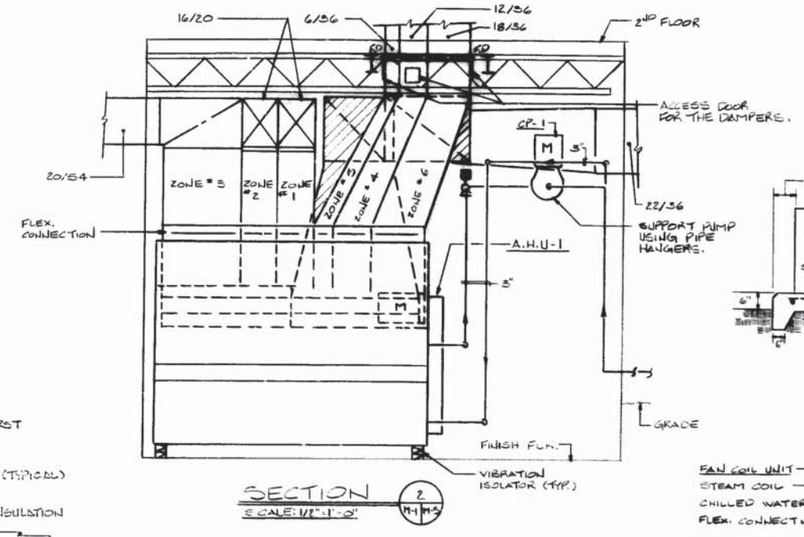

SECTION 2 M-5
SCALE: 1/2"=1'-0"

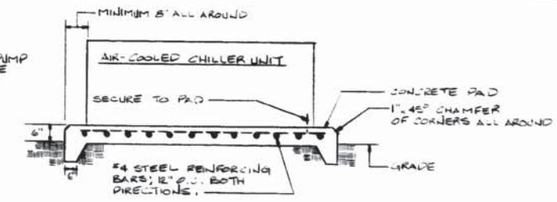

CONCRETE PAD DETAIL
NO SCALE

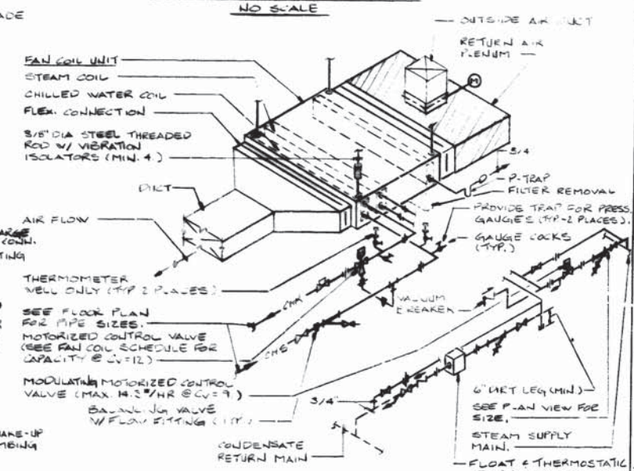

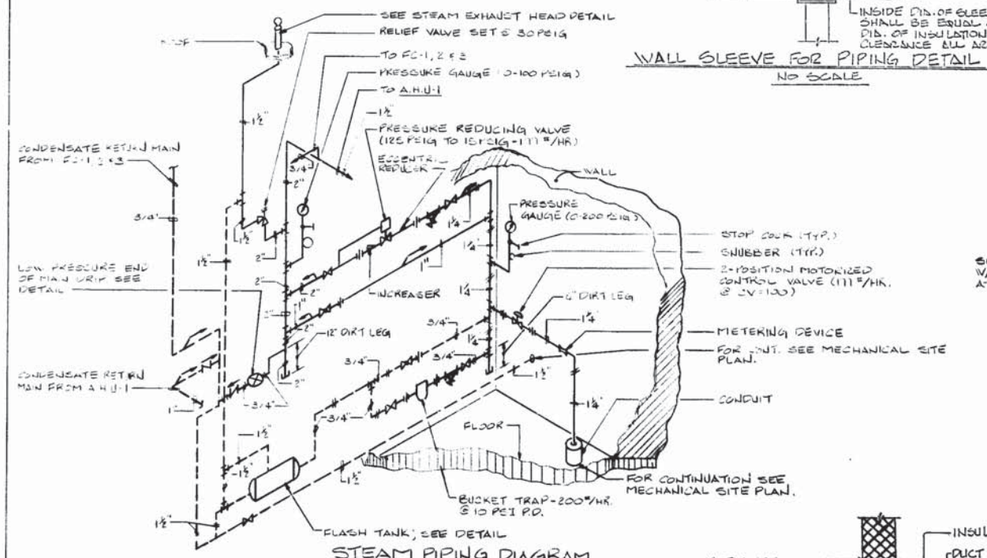

STEAM PIPING DIAGRAM
NO SCALE

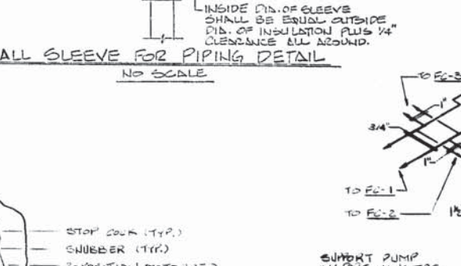

CHILLED WATER PIPING DIAGRAM
NO SCALE

PIPING INSTALLATION FOR FC-1, FC-2 & FC-3
NO SCALE

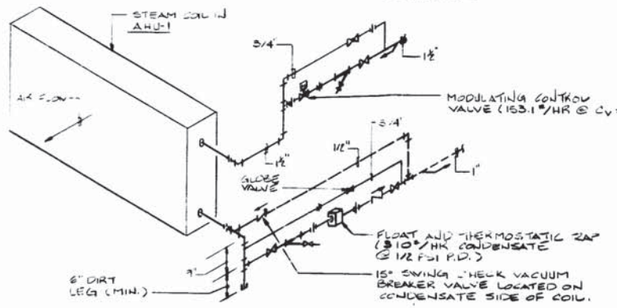

STEAM HEATING COIL PIPE CONNECTION - FOR AHU-1
DETAIL
NO SCALE

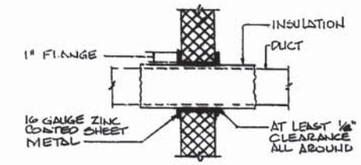

WALL SLEEVE FOR DUCTWORK DETAIL
No SCALE

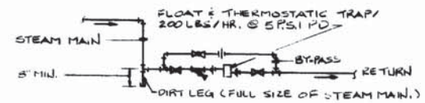

LOW PRESSURE END OF MAIN DRIP
NO SCALE

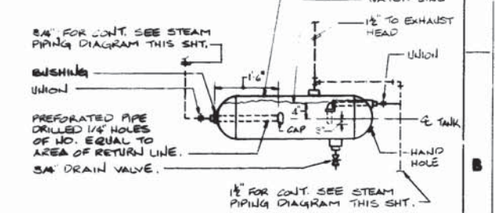

FLASH TANK PIPING CONNECTIONS
NO SCALE

GRAPHIC SCALE
1/2" = 1'-0"

RECORD DRAWING
LETTER DATED 14 OCT 1988

M-5

Consulting Engineers
Virginia Beach, Virginia

DEPARTMENT OF THE NAVY — NAVAL FACILITIES ENGINEERING COMMAND
ATLANTIC DIVISION
NAVAL STATION — NORFOLK, VA.
NAVAL AIR STATION — NORFOLK, VA.
ADMINISTRATIVE BUILDING, NAVAL AIR RESERVE UNIT
MECHANICAL DETAILS & SECTIONS

SIZE F | CODE IDENT. NO. 80091 | DRAWING NO. 4125965
CONTR. IDENT. NO. N62470-83-B-3014
SCALE NOTED | DATE 08-03-3014 | SHEET 39 OF 47

ACTIVITY SATISFACTORY TO
15 Jul 85

COMMONWEALTH OF VIRGINIA — No. 12265 — 83-281 — PROFESSIONAL ENGINEER

NO.	REVISIONS DESCRIPTION	DATE	APPROVED

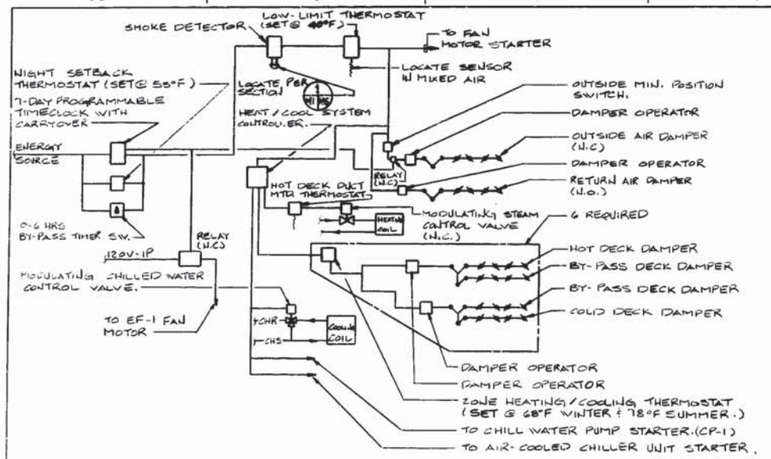

AHU-1 CONTROLS

NO SCALE

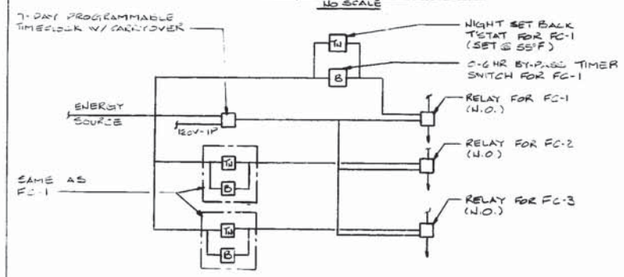

NIGHT SET-BACK CONTROLS FOR FC-1, FC-2 AND FC-3

NO SCALE

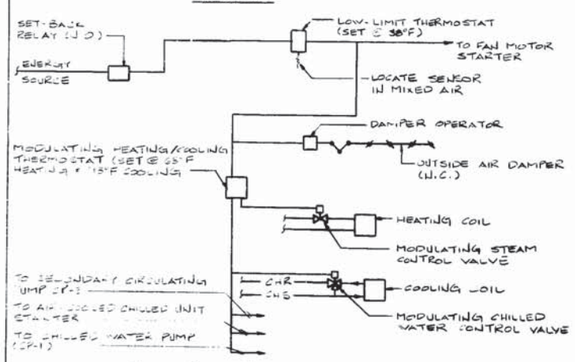

FC-1, FC-2 & FC-3 CONTROLS

NO SCALE

SYSTEM NO.	DESCRIPTION	SKETCH	TIME SCHEDULE OPERATION	CUT-OFF COOLING	DEMAND LIMIT: START/STOP	O.A. TEMP. CUT-OFF	NIGHT PURGE CYCLE O.A. CONTROL	CHILLED WATER RESET	SPACE NIGHT SET BACK	O.A. SCHEDULE RESET	START-TIME OPERATION	HOT/COOL DECK RESET	MAINT. RUN-TIME RECORD	TROUBLE O.A. SHOOTS	METERING	CHILLED WATER RESET	CHILLED WATER TEMP RESET
			EMCS FUNCTIONS FUTURE														
			1	2	3	6	7	13*	14*	16	10	25	24	28	5	11	12
1	A.H.U-1	A															
2	FC-1	B															
3	FC-2	B															
4	FC-3	B															
5	CH-1	C															
6	STEAM SUPPLY	D															

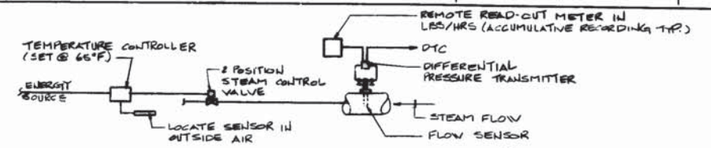

STEAM SHUT-OFF CONTROLS

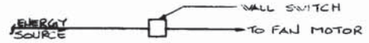

EF-2, EF-3, EF-4 & EF-5 CONTROLS

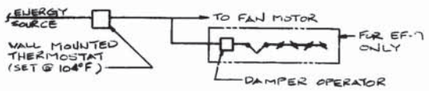

EF-6 & EF-7 CONTROL

AUTOMATIC TEMPERATURE CONTROLS

NO SCALE

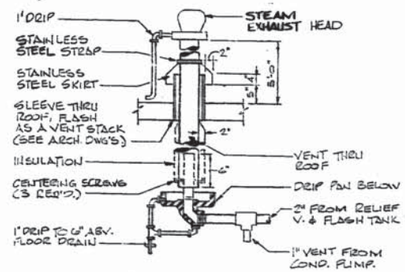

STEAM EXHAUST DETAIL

NO SCALE

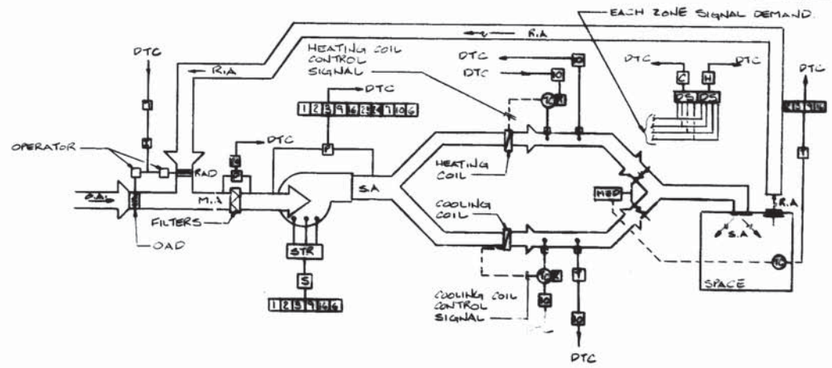

A.H.U.-1 MONITORING - SKETCH "A"

NO SCALE

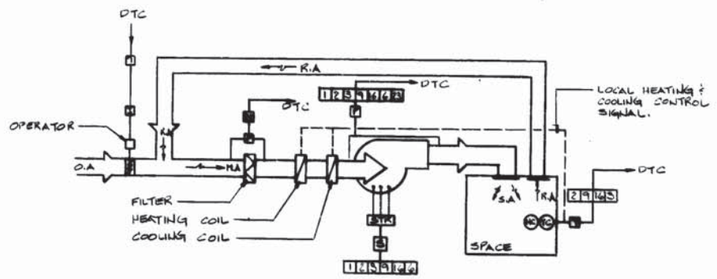

FC-1, FC-2 & FC-3 MONITORING - SKETCH "B"

NO SCALE

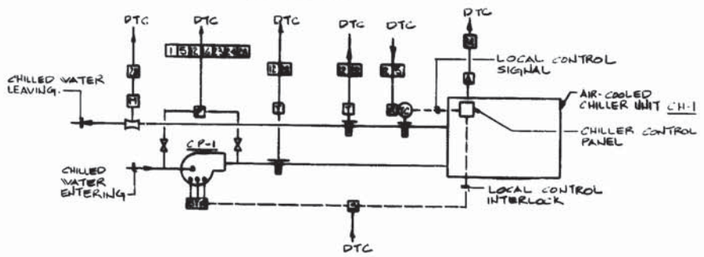

CH-1 MONITORING - SKETCH 'C'

NO SCALE

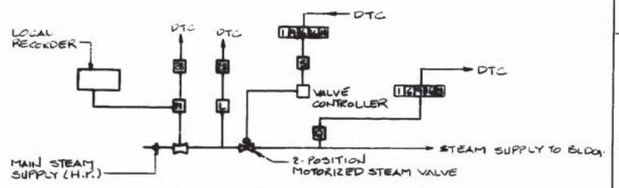

STEAM SUPPLY MONITORING - SKETCH 'D'

NO SCALE

REVISIONS			
SYM.	DESCRIPTION	DATE	APPROVED

LEGEND - ENERGY MONITORING

A	ALARM CONTACT SIGNAL
C	LOCAL CONTROL INTERRUPTION INTERFACE
P	DIFFERENTIAL PRESSURE SWITCH STATUS SIGNAL
R	CONTROLLER RESET INTERFACE
S	START/STOP INTERFACE
T	TEMPERATURE INDICATION
F	FUNCTION NUMBER WHICH REQUIRES SIGNAL
TC	TEMPERATURE CONTROLLER
MS	MOTOR STARTER
	SENSOR INSTALLED IN THERMOMETER WELL
DTC	DATA TERMINAL CABINET
O.A.	OUTSIDE AIR
O.A.D.	OUTSIDE AIR DAMPER
R.A.	RETURN AIR
R.A.D.	RETURN AIR DAMPER
S.A.	SUPPLY AIR
	THERMOWELL
	ISOLATION VALVE
	LOCAL CONTROL SIGNAL
M	METER SIGNAL
E	ENERGY METER
MBD	MULTIBLADE DAMPER
C	GREATEST COOLING DEMAND SIGNAL
H	GREATEST HEATING DEMAND SIGNAL
HS	HIGH/LOW DEMAND SIGNAL SELECTOR
F	STEAM FLOW SENSOR
P	PRESSURE INDICATOR LEVEL
M.A.	MIXED AIR

ENERGY MONITORING SYSTEM (EMCS) NOTES

1. SIGNAL CHARACTERISTICS OF TRANSDUCERS:
   - A) DIRECT CURRENT WITH VOLTAGE WITHIN THE RANGE FROM 0.5V DC TO 0 TO 20V DC.
   - B) 4 TO 20 MILLIAMPERE CURRENT LOOP WITH 250 OHMS NORMAL IMPEDANCE, 500 OHMS MAX.
   - C) SNAP ACTING, GOLD PLATED/PLATINUM WIRING CONTACT RATED FOR 24V DC.
2. INDICATING ALARM AND CONTROL FUNCTION SHALL BE WIRED TO THE DATA TERMINAL CABINET (DTC) LOCATION ON SHEET M-1 UNDER THIS CONTRACT. TERMINALS IN (DTC) SHALL BE PERMANENTLY IDENTIFIED AS TO FUNCTION, TYPE AND RANGE OF SIGNAL.
3. PROVIDE UNDER THIS CONTRACT THE FOLLOWING:
   - A) 1/2 INCH CONDUIT WITH SUITABLE NUMBER OF WIRES PULLED FROM EACH AIR HANDLING UNIT, FAN COIL UNIT AND OTHER MISC. SYSTEMS TO THE DTC.
   - B) 1/2 INCH CONDUIT WITH SUITABLE NUMBER OF WIRES PULLED FROM AIR-COOLED CHILLER UNIT AND ASSOCIATE EQUIPMENT TO THE DTC.
   - C) ALL SENSING, STATUS, ALARM AND INTERFACE DEVICES REQUIRED.

RECORD DRAWING LETTER DATED 14 OCT 1988

M-6

OLD DOMINION ELECTRIC CO. Consulting Engineers Virginia Beach, Virginia

COMMONWEALTH OF VIRGINIA WILLIAM S. COWDELL No. 12165 PROFESSIONAL ENGINEER

DEPARTMENT OF THE NAVY NAVAL FACILITIES ENGINEERING COMMAND
ATLANTIC DIVISION
NAVAL STATION NORFOLK, VA.
NAVAL AIR STATION NORFOLK, VA.
ADMINISTRATIVE BUILDING, NAVAL AIR RESERVE UNIT
MECHANICAL-CONTROL DIAG. & EMCS

DES.	CODE IDENT. NO.	DRAWING NO.
F	80091	0000470-83-E-3014

DATE 06-83-3014 SHEET 40 OF 47

15 Jul 88

SP-108 Record Drawings

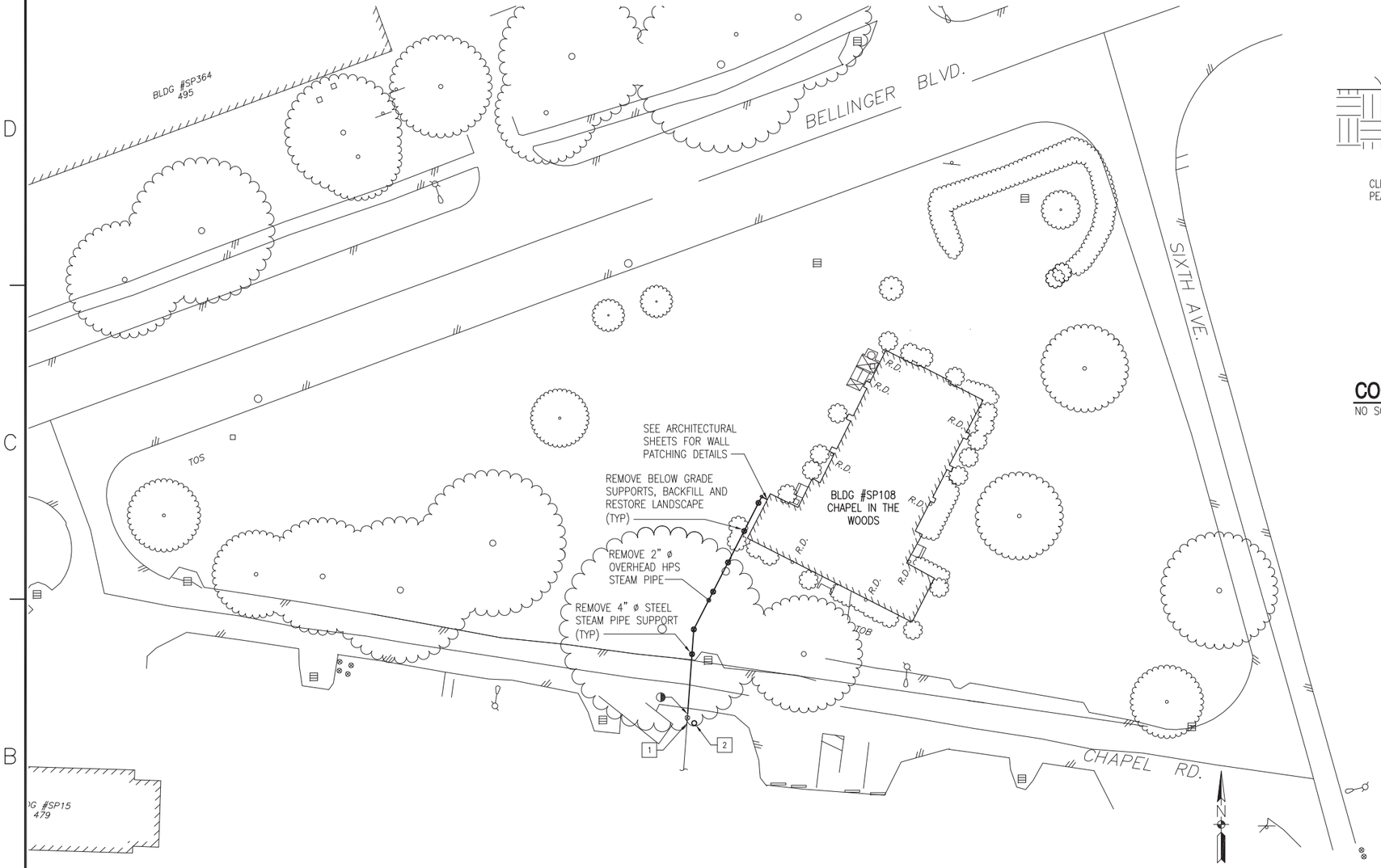

SP-108 CHAPEL - MECHANICAL SITE DEMOLITION & NEW WORK PLAN

SCALE: 1" = 25'

PLAN NORTH

NEW WORK NOTES:

1. PROVIDE END OF MAIN TRAP, LOCATE TRAP 4 FEET ABOVE FINISH GRADE, DRAIN TO COOLING WELL.
2. PROVIDE COOLING WELL. SEE "COOLING WELL DETAIL" THIS SHEET.

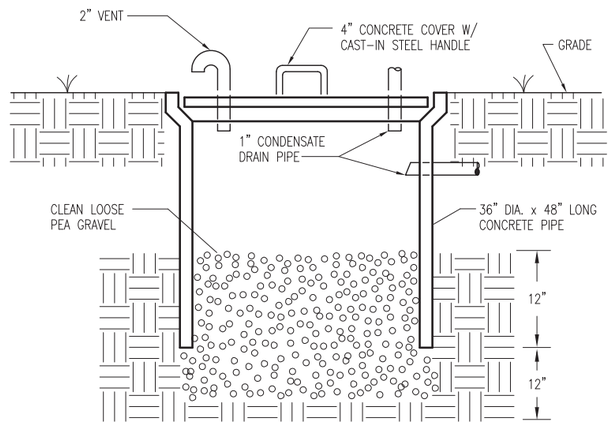

COOLING WELL DETAIL

NO SCALE — MS101C D4

GRAPHIC SCALE:

1" = 25'

0 12.5' 25' 50'

RECORD DRAWING LETTER DATED 09/22/09

DATE	APPR	DESCRIPTION
09/22/09	RWB	AS-BUILT
03/21/08	WSW	ISSUED FOR CONSTRUCTION

NAVFAC

Mortenson construction

TranSystems AE LOGO

COMMONWEALTH OF VIRGINIA
PROFESSIONAL ENGINEER
R. W. BROWN
LIC. NO. 10267
3-21-2008
SEAL

DES JAE | DRW JAE
REVIEWED BY RWB
PM/DM
CHIEF ENG/ARCH

DEPARTMENT OF THE NAVY
NAVAL FACILITIES ENGINEERING COMMAND
HAMPTON ROADS IPT ~ PWD NORFOLK
NAVAL FACILITIES ENGINEERING COMMAND ~ MID-ATLANTIC
NAVAL STATION ~ NORFOLK, VA
CHAMBERS FIELD
NORFOLK, VIRGINIA

P201V
AIRCRAFT MAINTENANCE HANGAR

SP-108 CHAPEL
MECHANICAL SITE DEMOLITION & NEW WORK PLAN

CODE ID. NO. 80091 | SIZE D
SCALE: AS NOTED
MAXIMO NO.
STA. PROJ. NO. P-201V
WORK ORDER NO.
CONSTR. CONTR. NO. N62472-01-D-0077
NAVFAC DRAWING NO. 12553438
SHEET 399 OF 525

MS101C

DRAWFORM REVISION: 01 MAY 2006

REV/DATE:

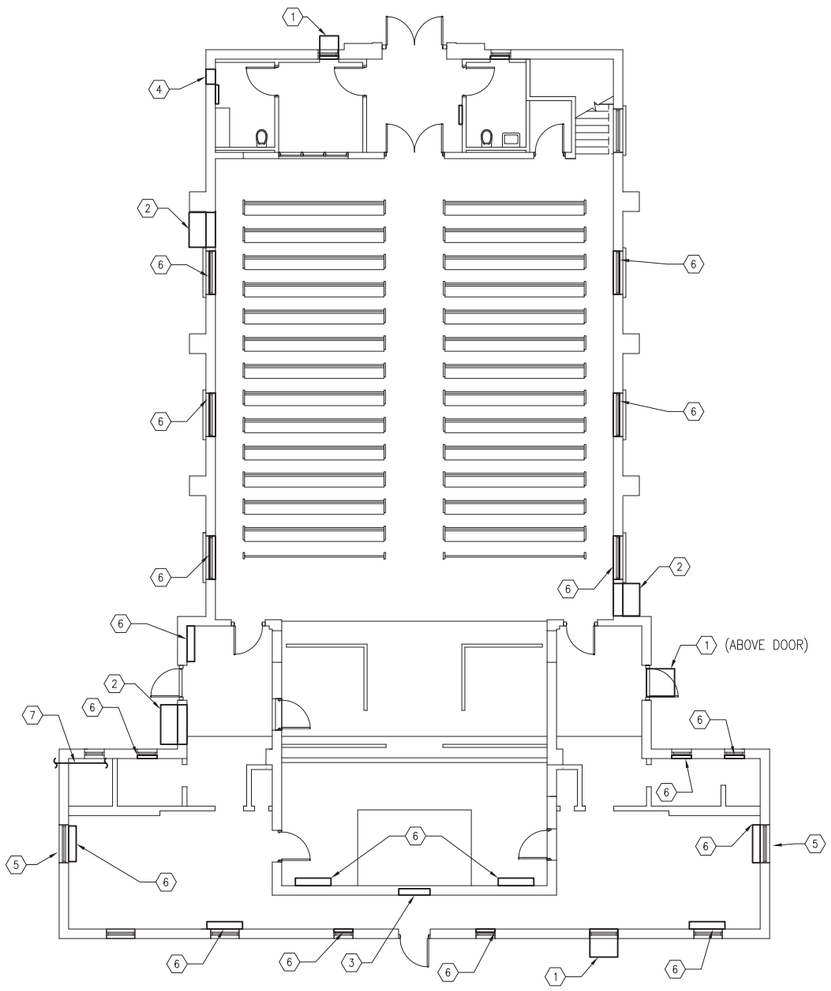

SP-108 CHAPEL - MECHANICAL DEMOLITION PLAN

SCALE: 1/8" = 1'-0"

PLAN NORTH

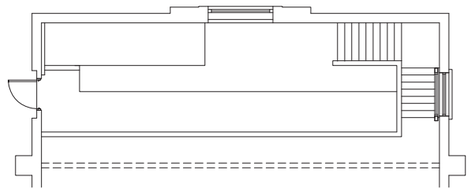

MECHANICAL PLAN - BALCONY

SCALE: 1/8" = 1'-0"

PLAN NORTH

DEMOLITION NOTES:

1. REMOVE WINDOW AIR CONDITIONING UNIT AND SUPPORT COMPLETE. SEE ARCHITECTURAL PLANS FOR WALL PATCHING.
2. REMOVE WALL MOUNTED HEAT PUMPS COMPLETE. COORDINATE WALL PATCHING WITH ARCHITECTURAL DRAWINGS.
3. WALL SHUTTER TO REMAIN. SEE ARCHITECTURAL PLANS FOR PATCHING ON BACKSIDE.
4. REMOVE BRICK VENT LOUVER. SEE ARCHITECTURAL PLANS FOR WALL PATCHING.
5. REMOVE WALL LOUVER.
6. REMOVE RADIATORS COMPLETE. CAP STEAM PIPE FLUSH WITH FINISHED FLOOR.
7. REMOVE ALL STEAM PIPING AND APPURTENANCES ABOVE FINISHED FLOOR COMPLETE. SEE ARCHITECTURAL PLANS FOR WALL PATCHING.

GRAPHIC SCALE:

1/8" = 1'-0"

0 4' 8' 16'

RECORD DRAWING LETTER DATED 09/22/09

REVDATE:

APPR	DATE	DESCRIPTION	STM
WSW	03/21/08	ISSUED FOR CONSTRUCTION	
RWB	09/22/09	AS-BUILT	

NAVFAC

Mortenson construction

TranSystems AE LOGO

COMMONWEALTH OF VIRGINIA
PROFESSIONAL ENGINEER
R. W. BROWN
LIC. NO. 10267
3-21-2008

SEAL

DES JAE	DRW JAE
REVIEWED BY RWB	
PM/DM	
CHIEF ENG/ARCH	

DEPARTMENT OF THE NAVY
NAVAL FACILITIES ENGINEERING COMMAND
HAMPTON ROADS IPT ~ PWD NORFOLK

NAVAL FACILITIES ENGINEERING COMMAND ~ MID-ATLANTIC
NAVAL STATION - NORFOLK, VA

CHAMBERS FIELD NORFOLK, VIRGINIA

P201V
AIRCRAFT MAINTENANCE HANGAR

SP-108 CHAPEL
MECHANICAL DEMOLITION PLAN

CODE ID. NO. 80091	SIZE D
SCALE: NONE	
MAXIMO NO.	
STA. PROJ. NO. P-201V	
WORK ORDER NO.	
CONSTR. CONTR. NO. N62472-01-D-0077	
NAVFAC DRAWING NO. 12553439	
SHEET 400 OF 525	

MD101C

DRAWFORM REVISION: 01 MAY 2006

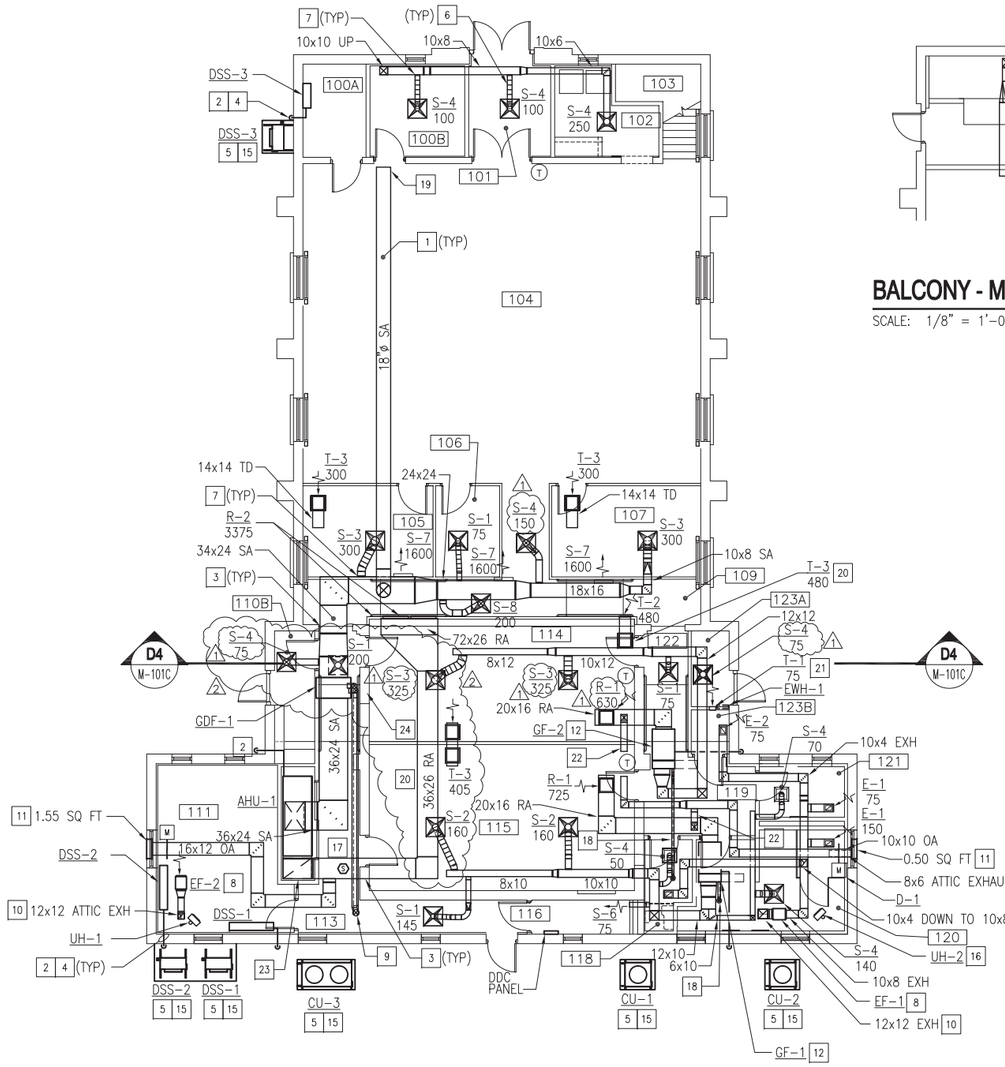

SP-108 CHAPEL - MECHANICAL PLAN

SCALE: 1/8" = 1'-0"

PLAN NORTH

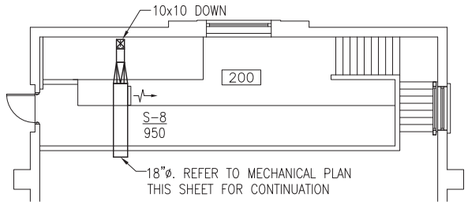

BALCONY - MECHANICAL PLAN

SCALE: 1/8" = 1'-0"

PLAN NORTH

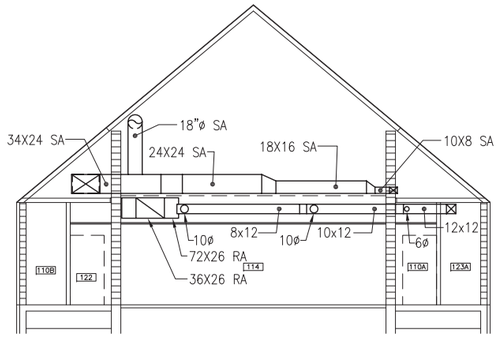

SP-108 CHAPEL - MECHANICAL SECTION

SCALE: 1/8" = 1'-0"

M-101C D4

CONSTRUCTION NOTES:

1. RUN DUCTWORK THROUGH TRUSSES. SEE "SP-108 CHAPEL – MECHANICAL SECTION" THIS SHEET.
2. PROVIDE 3/4" CONDENSATE DRAIN AND DISCHARGE TO SPLASH BLOCK. SEE "TYPICAL COIL CONDENSATE TRAP DETAIL" SHEET M-501.
3. SEE "DUCTWORK WALL SLEEVE DETAIL" SHEET M-501.
4. SEE "PIPE SLEEVE DETAIL" SHEET M-501.
5. SEE "TYPICAL REFRIGERANT PIPING DETAIL" SHEET M-501.
6. SEE "FLEXIBLE DUCT INSTALLATION DETAIL" SHEET M-501.
7. SEE "DUCT BRANCH DETAIL" SHEET M-501.
8. SEE "TYPICAL INLINE EXHAUST FAN SUPPORT DETAIL" SHEET M-501.
9. 7" CONCENTRIC VENT. SEE "FLUE AND COMBUSTION AIR PIPE ROOF PENETRATION DETAIL" SHEET M-502.
10. EXHAUST DUCT UP THROUGHT ROOF WITH GOOSENECK TERMINATION. SEE "EXHAUST AIR GOOSENECK TERMINATION DETAIL" SHEET M-502.
11. PROVIDE WALL LOUVER. SEE "WALL LOUVER DETAIL" SHEET M-502. SEE ARCHITECTURAL SHEET A-604C FOR LOUVER DIMENSIONS.
12. SEE "HORIZONTAL AIR DISCHARGE EQUIPMENT DETAIL" SHEET M-502.
13. SEE "GAS DUCT FURNACE MOUNTING DETAIL" SHEET M-502.
14. SEE "UPFLOW AIR HANDLING UNIT DETAIL" SHEET M-502.
15. SEE "TYPICAL EQUIPMENT PAD DETAIL" SHEET M-501.
16. UNIT HEATER MOUNTED ATTIC SPACE. SEE "GAS UNIT HEATER DETAIL" SHEET M-502. RUN FLUE UP THROUGH ROOF PER MANUFACTURER'S RECOMMENDATIONS.
17. PROVIDE SMOKE DETECTOR SEE FIRE PROTECTION DRAWINGS.
18. CONCENTRIC 2" VENT AND 3" COMBUSTION AIR.
19. REFER TO BALCONY MECHANICAL PLAN THIS SHEET FOR CONTINUATION.
20. 14x14 TD. PROVIDE GRILLE MARK T-3 EACH END AT CEILING.
21. 8x8 TD. MOUNT TOP OF GRILLE 8'-6" AFF EACH END.
22. 8x8 OA. BALANCE TO OUTSIDE AIR QUANTITY INDICATED ON GAS FURNACE EQUIPMENT SCHEDULE.
23. 36x26 RA DOWN TO 36Wx122Lx24H FIELD FABRICATED RETURN AIR PLENUM.
24. PROVIDE ACCESS DOOR IN WALL, MINIMUM SIZE OF DOOR SHALL MEET MAINTENANCE CLEARANCE REQUIREMENTS OF GDF-1.

GENERAL CONSTRUCTION NOTES:

1. EXPOSED DUCTWORK SHALL BE PAINTED TO MATCH INTERIOR. SEE ARCHITECTURAL SHEETS FOR REQUIEMENTS.
2. SIZE REFRIGERANT LINES PER MANUFACTURERS RECOMMENDATION.
3. SEE ARCHITECTURAL SHEETS FOR ACCESS PANELS IN GWB CEILINGS.

GRAPHIC SCALE:

1/8" = 1'-0"

0 4' 8' 16'

RECORD DRAWING LETTER DATED 09/22/09

REVDATE:

STM	DESCRIPTION	DATE	APPR
A	AS-BUILT	09/22/09	RWB
A	GAS DUCT FURNACE REVISION	02/02/09	JAE
A	AIRFLOW CORRECTION	07/11/08	RWB
A	ISSUED FOR CONSTRUCTION	03/21/08	WSW

NAVFAC

Mortenson construction

TranSystems AE LOGO

COMMONWEALTH OF VIRGINIA
PROFESSIONAL ENGINEER
R. W. BROWN
LIC. NO. 10267
3-21-2008
SEAL

DES	JAE	DRW	JAE
REVIEWED BY	RWB		
PM/DM			
CHIEF ENG/ARCH			

DEPARTMENT OF THE NAVY
NAVAL FACILITIES ENGINEERING COMMAND ~ MID-ATLANTIC
HAMPTON ROADS IPT ~ PWD NORFOLK | NAVAL STATION ~ NORFOLK, VA
CHAMBERS FIELD | NORFOLK, VIRGINIA

P201V
AIRCRAFT MAINTENANCE HANGAR

SP-108 CHAPEL
MECHANICAL PLAN

CODE ID. NO. 80091	SIZE D
SCALE: NONE	
MAXIMO NO.	
STA. PROJ. NO. P-201V	
WORK ORDER NO.	
CONSTR. CONTR. NO. N62472-01-D-0077	
NAVFAC DRAWING NO. 12553440	
SHEET 401 OF 525	

M-101C

DRAWFORM REVISION: 01 MAY 2006

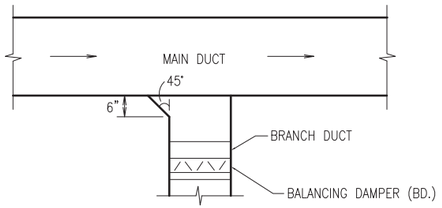

DUCT BRANCH DETAIL
NO SCALE — M-101C — D2

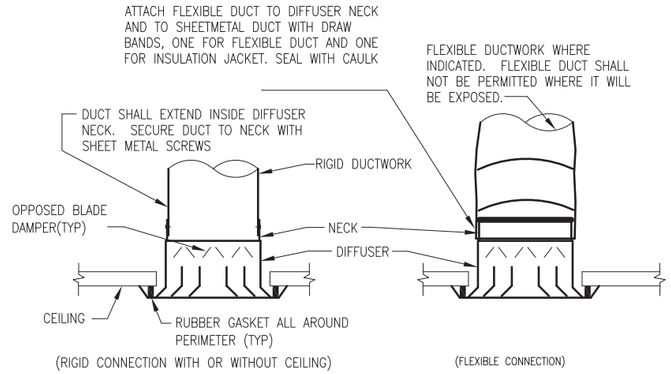

TYPICAL DUCT TO DIFFUSER/REGISTER CONNECTION
NO SCALE — M-101C — C3

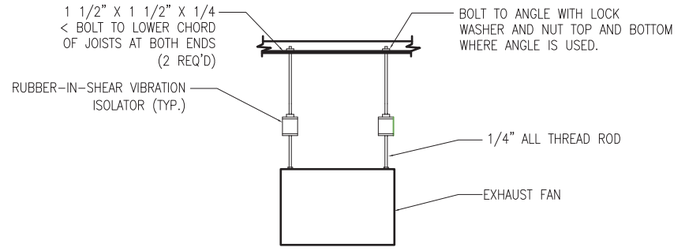

TYPICAL IN LINE EXHAUST FAN SUPPORT DETAIL
NO SCALE — M-101C — D5

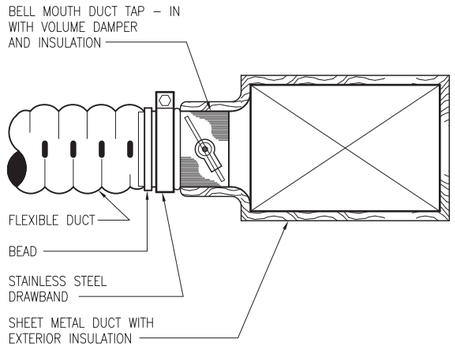

FLEXIBLE DUCT INSTALLATION DETAIL
NO SCALE — M-101C — B2

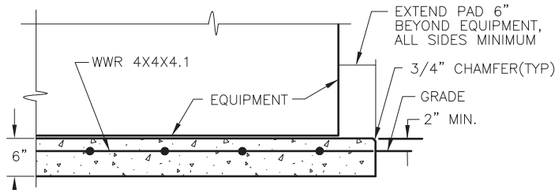

TYPICAL EQUIPMENT PAD DETAIL
NO SCALE — M-101C — B3

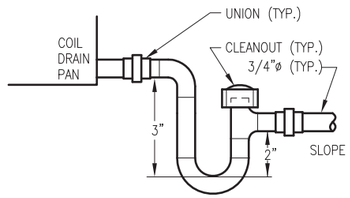

TYPICAL COIL CONDENSATE TRAP DETAIL
NO SCALE — M-101C — B5

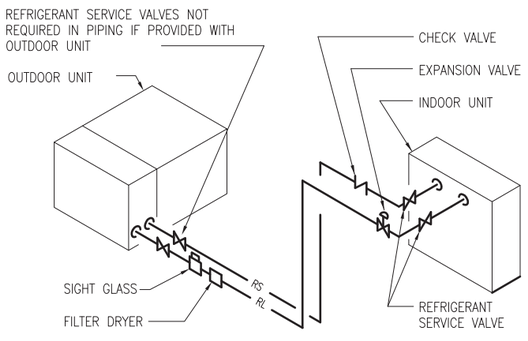

NOTES:
CHARGING CONNECTIONS AND SERVICE PORTS SHALL BE PROVIDED WHERE RECOMMENDED BY THE MANUFACTURER.

TYPICAL REFRIGERANT PIPING DETAIL
NO SCALE — M-101C — A2

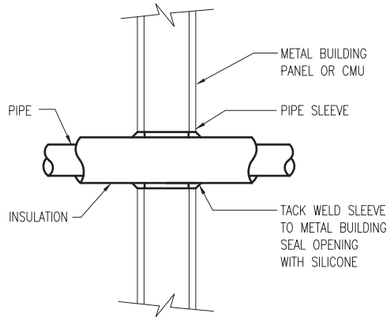

PIPE SLEEVE DETAIL
NO SCALE — M-101C — A3

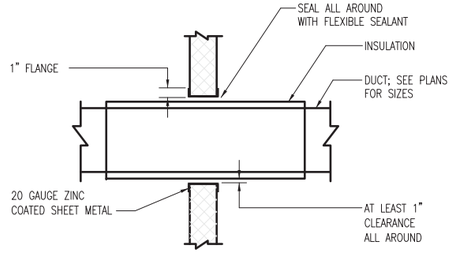

DUCTWORK WALL SLEEVE DETAIL
NO SCALE — M-101C — A4

RECORD DRAWING LETTER DATED 09/22/09

1	AS-BUILT	09/22/09	RWB
2	ISSUED FOR CONSTRUCTION	03/21/08	WSW

DESCRIPTION | DATE | APPR

NAVFAC

Mortenson construction

TranSystems AE LOGO

COMMONWEALTH OF VIRGINIA
PROFESSIONAL ENGINEER
R. W. BROWN
LIC. NO. 10267
3-21-2008
SEAL

DES JAE	DRW JAE
REVIEWED BY RWB	
PM/DM	
CHIEF ENG/ARCH	

DEPARTMENT OF THE NAVY
NAVAL FACILITIES ENGINEERING COMMAND ~ MID-ATLANTIC
HAMPTON ROADS IPT ~ PWD NORFOLK
NAVAL FACILITIES ENGINEERING COMMAND
NAVAL STATION – NORFOLK, VA
CHAMBERS FIELD
NORFOLK, VIRGINIA
P201V
AIRCRAFT MAINTENANCE HANGAR
SP-108 CHAPEL
DETAILS

CODE ID. NO. 80091	SIZE D
SCALE: NONE	
MAXIMO NO.	
STA. PROJ. NO. P-201V	
WORK ORDER NO.	
CONSTR. CONTR. NO. N62472-01-D-0077	
NAVFAC DRAWING NO. 12553441	
SHEET 402 OF 525	

M-501C

DRAWFORM REVISION: 01 MAY 2006

REVDATE:

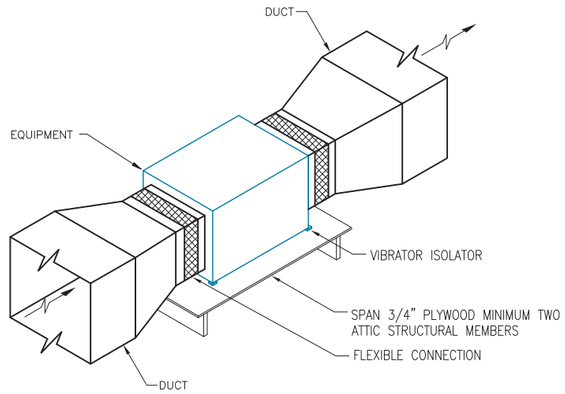

HORIZONTAL AIR DISCHARGE EQUIPMENT DETAIL C2

NO SCALE M-101C

NOTES:

1. MAINTAIN MANUFACTURER'S RECOMMENDED SERVICE CLEARANCES FOR CONTROLS, ELECTRICAL CONNECTIONS AND MOTOR.

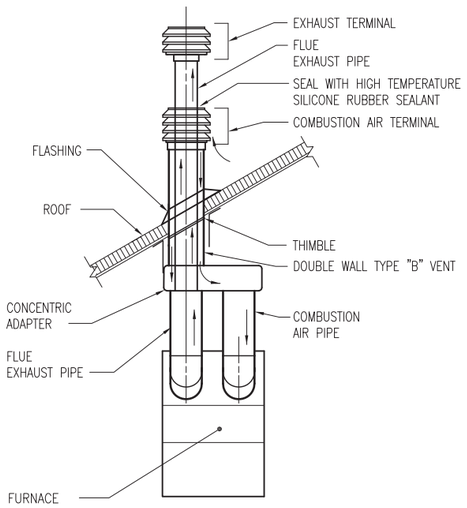

FLUE AND COMBUSTION AIR PIPE ROOF PENETRATION DETAIL C4

NO SCALE M-101C

NOTES:

1. INSTALL AND SIZE PER MANUFACTURERS RECOMMENDATIONS.

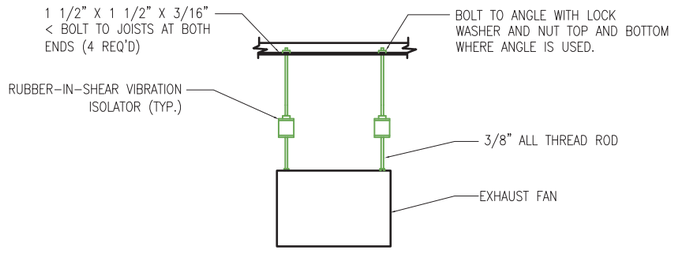

GAS DUCT FURNANCE MOUNTING DETAIL D5

NO SCALE M-101C

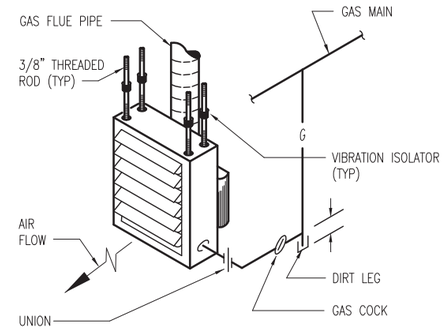

GAS FIRED UNIT HEATER DETAIL B5

NO SCALE M-101C

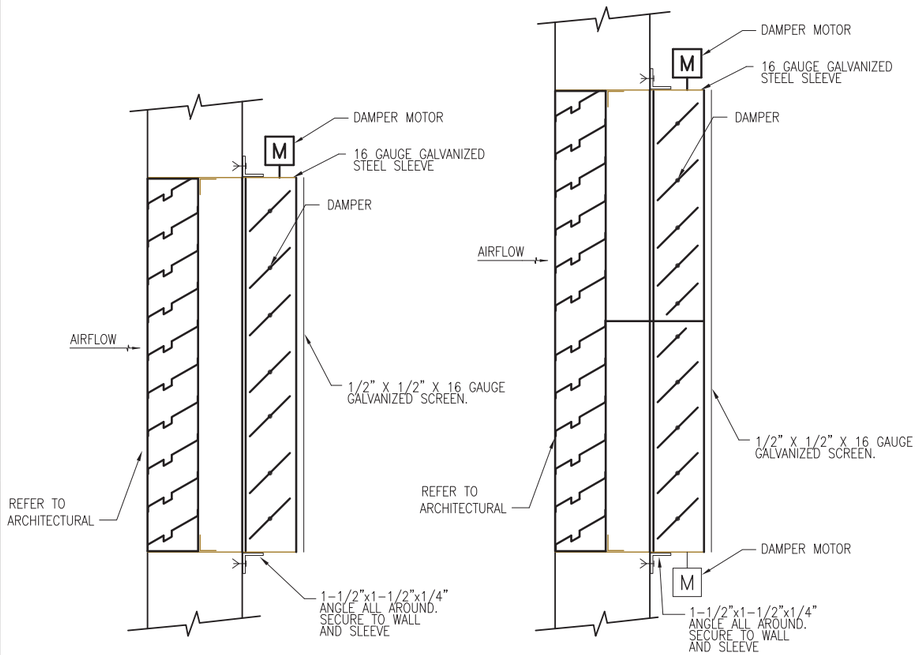

WALL LOUVER WITH DAMPER DETAIL A2

NO SCALE M-101C

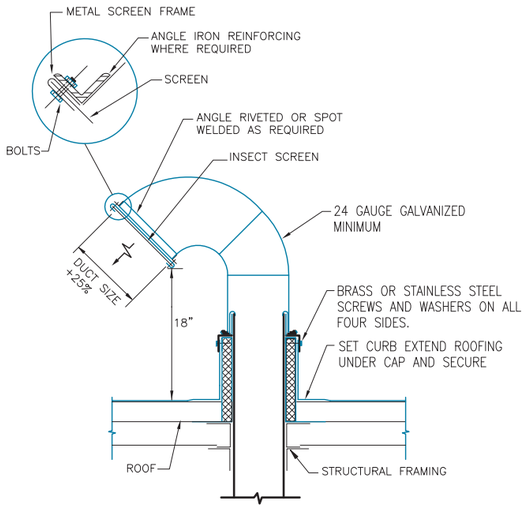

EXHAUST AIR GOOSENECK TERMINATION DETAIL A4

NO SCALE M-101C

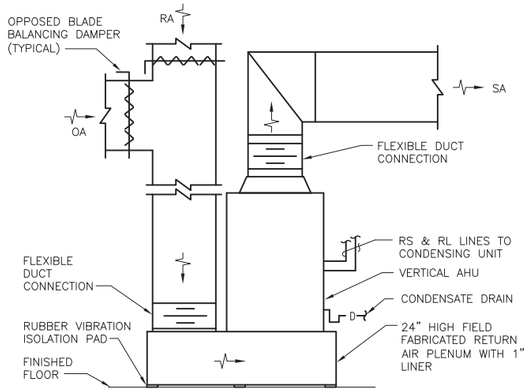

UPFLOW AIR HANDLING UNIT DETAIL A5

NO SCALE M-101C

RECORD DRAWING LETTER DATED 09/22/09

1	AS-BUILT	09/22/09	RWB
0	ISSUED FOR CONSTRUCTION	03/21/08	WSW
	DESCRIPTION	DATE	APPR

NAVFAC

Mortenson construction

TranSystems AE LOGO

COMMONWEALTH OF VIRGINIA
PROFESSIONAL ENGINEER
R. W. BROWN
LIC. NO. 10267
3-21-2008
SEAL

DES	JAE	DRW	JAE
REVIEWED BY	RWB		
PM/DM			
CHIEF ENG/ARCH			

DEPARTMENT OF THE NAVY
NAVAL FACILITIES ENGINEERING COMMAND - MID-ATLANTIC
HAMPTON ROADS IPT - PWD NORFOLK
NAVAL FACILITIES ENGINEERING COMMAND
NAVAL STATION - NORFOLK, VA
CHAMBERS FIELD
NORFOLK, VIRGINIA
P201V
AIRCRAFT MAINTENANCE HANGAR
SP-108 CHAPEL
DETAILS

CODE ID. NO. 80091	SIZE D
SCALE:	NONE
MAXIMO NO.	
STA. PROJ. NO.	P-201V
WORK ORDER NO.	
CONSTR. CONTR. NO.	N62472-01-D-0077
NAVFAC DRAWING NO.	12553442
SHEET	403 OF 525

M-502C

DRAWFORM REVISION: 01 MAY 2006

REVDATE:

AIR HANDLING UNIT (AHU) SCHEDULE

MARK	OA CFM	INDOOR UNIT FAN DATA SA CFM	ESP W.C.	MOTOR HP	MCA	MCOP	ELEC. V/PH/HZ	COOLING DATA TC MBH	TSH MBH	EAT DB(F)	EAT WB(F)	DESIGN BASED ON YORK	OUTDOOR UNIT MARK	ELECTRICAL DATA MCA	MOCP	V/PH/HZ	DESIGN BASED ON YORK	NOTES
AHU-1	750	7500	1.5	5	20	25	208/3/60	230.3	163.5	76.6	64.6	L4EU240A	CU-3	103.9	125	208/3/60	H4CE240A25	1,2,3,4,5,6,7,8

NOTES:
1. OUTDOOR UNIT COOLING CAPACITY BASED ON 95 DEG. F AMBIENT AIR TEMPERATURE.
2. PROVIDE COIL GUARD, IN-LINE FILTER, SERVICE VALVES AND 5 MINUTE TIME DELAY RELAY.
3. INTERLOCK UNIT WITH GAS FIRED DUCT FURNACE. REFER TO GAS FIRED DUCT FURNACE SCHEDULE.
4. RETURN AIR FILTER PROVIDED AT RETURN GRILLE. AIR FILTER WITH UNIT NOT REQUIRED.
5. AUTOMATIC TEMPERATURE CONTROLS FOR UNIT SHALL INTERFACE WITH EXISTING BASE WIDE TEMPERATURE CONTROL SYSTEM.
6. PROVIDE DUCT MOUNTED SMOKE DETECTOR LOCATED IN THE RETURN DUCT.
7. HORIZONTAL DISCHARGE UNIT. SUPPORT FROM STRUCTURE WITH VIBRATION ISOLATORS.
8. ELECTRIC DISCONNECT SWITCH BY DIVISION 16.

ELECTRIC WALL HEATER (EWH) SCHEDULE

MARK	SERVING	TOTAL CAPACITY BTUH	CFM	EAT °F	ELECTRICAL WATTS	ELECTRICAL V/PH/Hz	BUILT-IN ELECTRIC DISCONNECT	DESIGN BASED ON MARKEL MODEL NO.
EWH-1	MECHANICAL ROOM	2650	100	65	750	120/1/60	YES	E3321TTD

NOTES:
1. SEMI-RECESSED MOUNTED.
2. PROVIDE BUILT-IN THERMOSTAT.
3. PROVIDE BUILT-IN CIRCUIT BREAKER.

GAS FURNACE (GF) SCHEDULE

MARK	OA CFM	INDOOR UNIT FAN DATA SA CFM	ESP W.C.	MOTOR HP	ELEC. V/PH/HZ	HEATING DATA FUEL TYPE	GAS PRESS. IN. W.C.	INPUT MBH	OUTPUT MBH	EAT DB(F)	ELECTRICAL DATA MCA AMPS	MOCP AMPS	BASED ON YORK MODEL	CASED COOLING COIL TOTAL MBH	SENSIBLE BTUH	EAT DB(F)	EAT WB(F)	LAT DB(F)	LAT WB(F)	YORK MODEL	OUTDOOR UNIT ELECTRICAL DATA MARK	MCA	MOCP	ELEC. V/PH/HZ	BASED ON YORK MODEL
GF-1	75	800	0.7	1/2	120/1/60	NAT. GAS	9.0	60.0	56.0	65.5	9.0	20.0	–	28.3	19.7	76.4	64.5	54.0	52.5	–	CU-1	14.0	20	208/1/60	HRE030S06
GF-2	70	700	0.75	1/2	120/1/60	NAT. GAS	9.0	60.0	56.0	65.5	9.0	20.0	PM9B12N080DH11	27.3	17.6	76.6	64.6	54.0	52.5	G*FD036H17T	CU-2	16.9	25	208/1/60	HRE030S06

NOTES:
1. OUTDOOR UNIT COOLING CAPACITY BASED ON 95 DEG. F AMBIENT AIR TEMPERATURE
2. HORIZONTAL INDOOR GAS FURNACE WITH CASED HORIZONTAL DX COIL AT DISCHARGE.
3. PROVIDE COIL GUARD, IN-LINE FILTER, SERVICE VALVES AND 5 MINUTE TIME DELAY RELAY, LOW AMBIENT CONTROL.
4. PROVIDE CONCENTRIC VENT KIT
5. RETURN AIR FILTER PROVIDED AT RETURN GRILLE. AIR FILTER WITH UNIT NOT REQUIRED.
6. PROVIDE 7-DAY PROGRAMMABLE THERMOSTAT WITH 2 STAGE HEATING AND 1 STAGE COOLING.
7. PROVIDE TRANSITION DUCWORK UPSTREAM AND DOWNSTREAM OF DUCT MOUNTED COOLING COIL.

INDOOR GAS FIRED DUCT FURNACE (GDF) SCHEDULE

MARK	SERVING	INPUT CAPACITY MBH	OUTPUT CAPACITY MBH	FUEL	GAS INLET PRESSURE IN. W.C.	CFM	ENTERING AIR TEMP. °F	AIR TEMP. RISE °F	PRESSURE DROP " W.C.	ELECTRICAL FLA AMPS	ELECTRICAL UNIT CONTROL AMPS	ELECTRICAL V/PH/HZ	UNIT WEIGHT LBS	VENT SIZE INCHES	DESIGN BASED ON REZNOR MODEL
GDF-1	AHU-1	250,000	200,000	NAT. GAS	7	7500	65.2	24.5	.61	1.9	0.83	120/1/60	321	6	HSC-250

NOTES:
1. PROVIDE CONTROL TRANSFORMER AND AUTOMATIC TEMPERATURE CONTROLS TO INTERFACE WITH ASSOCIATED AC UNIT.
2. 80% THERMAL EFFICIENT. COMPLETE WITH SPARK IGNITED INTERMITTENT SAFETY PILOT, ELECTRONIC MODULATION GAS CONTROL.
3. PROVIDE VENTING SYSTEM, ASSOCIATED FITTINGS AND ACCESSORIES.
4. PROVIDE VERTICAL CONCENTRIC VENTING KIT.
5. DIRECT VENT / SEALED COMBUSTION UNIT.
6. PROVIDE 2" DEEP AUXILLARY DRAIN PAN UNDERNEATH UNIT.
7. PROVIDE INTERMITTENT PILOT WITH CONTINUOUS RETRY CONTROL SYSTEM.
8. PROVIDE HIGH AND LOW GAS PRESSURE SWITCHES.

EXHAUST FAN (EF) SCHEDULE

MARK	SERVING	TYPE	DRIVE	CFM	ESP	HP	RPM	SONE	ELECTRICAL VOLTS/PH/HZ	DESIGN BASED ON GREENHECK
EF-1	375	INLINE FAN	DIRECT	375	0.4	1/12	1473	6.5	120/1/60	SQ-95-D
EF-2	ATTIC	INLINE FAN	DIRECT	119	0.2	1/40	1550	4.0	120/1/60	SQ-60-D

NOTES:
1. PROVIDE BACKDRAFT DAMPER, VIBRATION ISOLATORS, FLEXIBLE DUCT CONNECTIONS, SOLID STATE SPEED CONTROLLER FOR AIR BALANCING.
2. PROVIDE WALL MOUNTED HUMIDISTAT FOR EF-2.

DUCTLESS SPLIT SYSTEMS (DSS) SCHEDULE

MARK	SERVING	INDOOR UNIT FAN DATA TOTAL CFM	COOLING DATA CAPACITY BTUH	SEER	ENTERING AIR TEMP DB(°F)	ENTERING AIR TEMP WB(°F)	OUTDOOR UNIT MARK	OUTDOOR DB (F)	MCA	MOCP	V/PH/HZ	DESIGN BASED ON MITSUBUSHI INDOOR / OUTDOOR
DSS-1	111	790	30,000	13.0	76.0	61.6	DSS-1	95.0	27	30	208/1/60	FCQ30MVJU/RZQ30MVJU
DSS-2	111	790	30,000	13.0	76.0	61.6	DSS-2	95.0	27	30	208/1/60	FCQ30MVJU/RZQ30MVJU
DSS-3	100A	353	15,000	13.0	76.0	62.6	DSS-3	95.0	13.7	20	208/1/60	FTXS15DVJU/RX15FVJU

NOTES:
1. SIZE AND INSTALL REFRIGERANT PIPING PER MANUFACTURER'S RECOMMENDATIONS.
3. INDOOR UNIT SHALL BE SURFACE WALL MOUNT TYPE.
4. COMPLETE WITH AIR FILTER, WALL MOUNTED 7-DAY PROGRAMMABLE THERMOSTAT, REFRIGERANT TUBING SET, REFRIGERANT IN-LINE FILTER AND SERVICE VALVES.
5. ROUTE CONDENSATE TO EXTERIOR WALL ONTO SPLASH BLOCKFLOOR DRAIN IN MECHANICAL ROOM 208.

GRILLES, REGISTERS & DIFFUSERS SCHEDULE

MARK	SERVICE	TYPE	NECK SIZE IN.	FACE SIZE IN.	MAX CFM	MAX NC	NOTES	DESIGN BASED ON TITUS
S-1	SUPPLY	LAY-IN DIFFUSER	6	24x24	140	30	1	TMSA
S-2	SUPPLY	LAY-IN DIFFUSER	8	24x24	245	30	1	TMSA
S-3	SUPPLY	LAY-IN DIFFUSER	10	24x24	385	30	1	TMSA
S-4	SUPPLY	SURFACE MTD DIFFUSER	6	12x12	150	30	2	TMSA-AA
S-5	SUPPLY	SURFACE MTD DIFFUSER	8	24x24	245	30	2	TMSA-AA
S-6	SUPPLY	SIDEWALL GRILLE	6x6	8x8	125	30	1	300RL
S-7	SUPPLY	DRUM LOUVER	50x10	52x12	1750	30	1	DL
S-8	SUPPLY	DUCT MOUNTED	8	24x24	200	30	2,6	S300FL
R-1	RETURN	CEILING MTD GRILLE	16x16	18x18	750	30	1,3,7	350RLF1
R-2	RETURN	WALL MOUNTED GRILLE	32x22	34x24	3400	30	1,3,5	350ZRLF1
T-1	TRANSFER	SIDEWALL GRILLE	8x8	10x10	150	30	2,4	350FL
T-2	TRANSFER	SIDEWALL GRILLE	14x14	16x16	500	30	1,4	350RL
T-3	TRANSFER	CEILING MTD GRILLE	14x14	16x16	500	30	1,4,7	350RL
E-1	EXHAUST	SURFACE MTD REGISTER	8x8	10x10	150	30	2,4	350FL
E-2	EXHAUST	DUCT MOUNTED	8x8	10x10	150	30	2,4	350FL

NOTES:
1. STEEL CONSTRUCTION
2. ALUMINUM CONSTRUCTION
3. RETURN FILTER GRILLE. PROVIDE TWO SETS OF 1" THICK THROWAWAY FILTERS EQUAL TO CAMFILL FARR 30/30.
4. 35° BLADE DEFLECTION
5. 0° BLADE DEFLECTION.
6. PROVIDE VOLUME EXTRACTOR.
7. PROVIDE 24x24 METAL PANEL FOR LAY-IN CEILING APPLICATION. INSTALL GRILLE CENTERED IN METAL PANEL.

UNIT HEATER SCHEDULE:

UH-1 & UH-2 – GAS FIRED UNIT HEATER, 30 MBH IINPUT CAPACITY, 24.3 OUTPUT CAPACITY, 700CFM, 1/30 HP FAN, 120V, 2.1 MCA, 60HZ,

THE DESIGN SHOWN INDICATING A MANUFACTURER'S MODEL NUMBER IN THE EQUIPMENT NOTES AND SCHEDULES IS INTENDED ONLY TO SHOW THE GENERAL SIZE, CONFIGURATION, LOCATION, CONNECTIONS AND/OR SUPPORT FOR THE EQUIPMENT OR SYSTEMS SPECIFIED WITH RELATION TO THE OTHER BUILDING SYSTEMS. THE NAMING OF A MANUFACTURER'S MODEL DOES NOT PRECLUDE OTHER MANUFACTURER'S OF SAME QUALITY, CRAFTSMANSHIP, AND REPUTATION FROM THE PROJECT.

RECORD DRAWING LETTER DATED 09/22/09

STM	DESCRIPTION	DATE	APPR
1	AS-BUILT	09/22/09	RWB
0	ISSUED FOR CONSTRUCTION	03/21/08	WSW

NAVFAC

Mortenson construction

TranSystems AE LOGO

COMMONWEALTH OF VIRGINIA
PROFESSIONAL ENGINEER
R. W. BROWN
LIC. NO. 10267
3-21-2008
SEAL

DES JAE | DRW JAE
REVIEWED BY: RWB
PM/DM
CHIEF ENG/ARCH

DEPARTMENT OF THE NAVY
NAVAL FACILITIES ENGINEERING COMMAND ~ MID-ATLANTIC
HAMPTON ROADS IPT ~ PWD NORFOLK
NAVAL FACILITIES ENGINEERING COMMAND ~ MID-ATLANTIC
NAVAL STATION ~ NORFOLK, VA
CHAMBERS FIELD
NORFOLK, VIRGINIA

P201V
AIRCRAFT MAINTENANCE HANGAR
SP-108 CHAPEL
EQUIPMENT SCHEDULES

CODE ID. NO. 80091 | SIZE D
SCALE: NONE
MAXIMO NO.
STA. PROJ. NO. P-201V
WORK ORDER NO.
CONSTR. CONTR. NO. N62472-01-D-0077
NAVFAC DRAWING NO. 12553443
SHEET 404 OF 525

M-601C

DRAWFORM REVISION: 01 MAY 2006

REV/DATE:

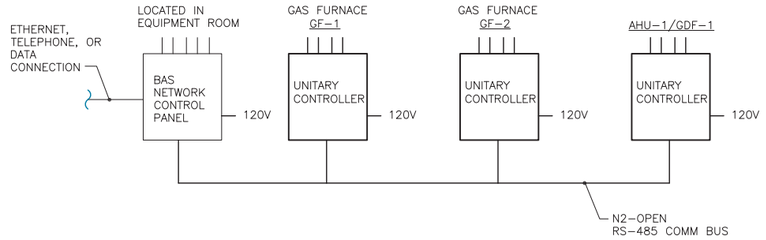

CONTROL SYSTEM ARCHITECTURE

PROVIDE DDC CONTROL SYSTEM HARDWARE, CONTROL WIRING AND ACCESSORIES, AND SOFTWARE TO INTERFACE WITH EXISTING BASE WIDE JOHNSON CONTROLS METASYS SYSTEM. BUILDING AUTOMATION SYSTEM SHALL BE REMOTELY MONITORED FROM THE BUILDING A-81.

CONTROL SYSTEM ABBREVIATIONS

ATC – AUTOMATIC TEMPERATURE CONTROL CONTRACTOR
ATCP – AUTOMATIC TEMPERATURE CONTROL PANEL
CSR – CURRENT SENSING RELAY
CC – COOLING COIL
C. – COMMON
D – DAMPER
DDC – DIRECT DIGITAL CONTROL
DPS – DIFFERENTIAL PRESSURE SWITCH
DPT – DIFFERENTIAL PRESSURE TRANSMITTER
EF – EXHAUST AIR FAN
ES – END SWITCH
EUH – ELECTRIC UNIT HEATER
FAS – FIRE ALARM SYSTEM
H – HUMIDISTAT
LL – LOW LIMIT
LAN – LOCAL AREA NETWORK
LDC – LOCAL DIGITAL CONTROLLER
M – MOTOR
N.C. – NORMALLY CLOSE
N.O. – NORMALLY OPEN
OA – OUTSIDE AIR SENSOR
PT – PRESSURE TRANSMITTER
POT – PORTABLE OPERATORS TERMINAL
SAF – SUPPLY AIR FAN
SDC – STAND ALONE DIGITAL CONTROLLER
SPT – STATIC PRESSURE TRANSMITTER
T – THERMOSTAT OR TEMPERATURE SENSOR
TEC – TERMINAL EQUIPMENT CONTROLLERS
TT – TEMPERATURE TRANSMITTER
HOA – HAND-OFF-AUTO

CONTROL SYSTEM SYMBOLS

AI – ANALOG INPUT
AO – ANALOG OUTPUT
BI – BINARY INPUT
BO – BINARY OUTPUT
HOA – HAND/OFF/AUTO
OA – OUTSIDE AIR
RA – RETURN AIR
SA – SUPPLY AIR
– DAMPER
– HAND OFF AUTOMATIC (HOA)
– MANUAL STARTER
– MAGNETIC STARTER
– COMBINATION STARTER AND DISCONNECT
CSR – CURRENT SENSING RELAY
D – DAMPER
FM – FLOW METER
FS – FLOW SENSOR
HT – HUMIDITY TRANSMITTER
M – MOTOR
PS – PRESSURE SWITCH
R – RELAY
SPT – STATIC PRESSURE TRANSMITTER
TEMP – TEMPERATURE SENSOR
– FAN
H/C – HEATING COIL
C/C – COOLING COIL
SD – DUCT SMOKE DETECTOR

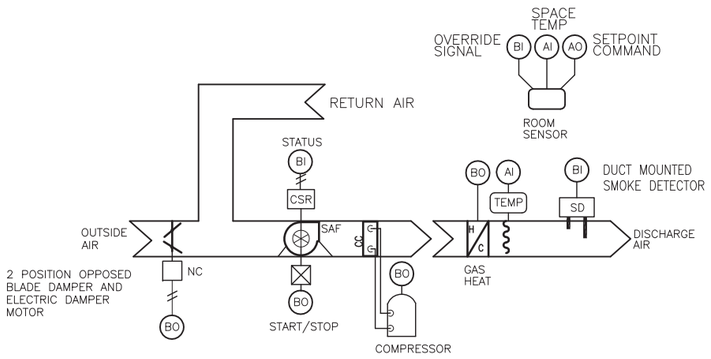

AHU-1 / GDF-1 CONTROL

SEQUENCE OF OPERATION
THE SYSTEM SHALL BE PLACED IN OCCUPIED MODE OR UNOCCUPIED MODE OF OPERATION AUTOMATICALLY BY THE DIRECT DIGITAL CONTROLS (DDC) BASED ON A TIME SCHEDULE OR BY A MANUAL COMMAND. THE GAS FIRED DUCT FURNACE SHALL BE INTERLOCKED WITH THE AHU-1 SUPPLY FAN. WHEN THE UNIT IS PLACED IN THE OCCUPIED MODE THE OUTSIDE AIR DAMPER SHALL OPEN TO ITS MINIMUM POSITION, THE UNIT SUPPLY FAN WILL BE ENERGIZED, AND EXHAUST FAN EF-1 SHALL BE ENERGIZED. THE SUPPLY FAN AND THE EXHAUST FAN SHALL RUN CONTINUOUSLY WHEN THE SYSTEM IS IN THE OCCUPIED MODE. THE OPPOSITE SHALL OCCUR IN THE UNOCCUPIED MODE. DURING THE UNOCCUPIED MODE THE OUTSIDE AIR DAMPER SHALL BE CLOSED.

ON A RISE ABOVE SPACE TEMPERATURE SETPOINT (75°F ADJUSTABLE) THE UNIT'S COOLING SHALL BE INDEXED TO MAINTAIN THE SPACE TEMPERATURE SETPOINT. ON A FALL BELOW SPACE TEMPERATURE SETPOINT (70°F ADJUSTABLE) AND AIRFLOW HAS BEEN PROVEN THE GAS DUCT FURNACE SHALL BE ENERGIZED TO MAINTAIN SETPOINT.

WHEN THE SYSTEM IS IN THE UNOCCUPIED MODE THE SYSTEM SHALL BE CONTROLLED TO MAINTAIN SETUP TEMPERATURE SETPOINT (85°F ADJUSTABLE) AND SETBACK TEMPERATURE SETPOINT (65°F ADJUSTABLE).

A TIMED LOCAL OVERRIDE CONTROL SHALL ALLOW AN OCCUPANT TO OVERRIDE THE SCHEDULE AND PLACE THE SYSTEM INTO AN OCCUPIED MODE FOR AN ADJUSTABLE PERIOD OF TIME. AT THE EXPIRATION OF THIS TIME, CONTROL OF THE SYSTEM SHALL RETURN TO THE SCHEDULE.

ON SENSING PRODUCTS OF COMBUSTION AN IONIZATION TYPE DUCT MOUNTED SMOKE DETECTOR LOCATED IN THE RETURN AIR STREAM SHALL DEENERGIZE THE SUPPLY FAN AND DEENERGIZE THE GAS FIRED DUCT FURNACE. A SIGNAL SHALL BE SENT TO THE AUTOMATIC TEMERATURE CONTROL SYSTEM AND FIRE ALARM SYSTEM.

WHEN THE UNIT IS SHUTDOWN BY EITHER A STOP COMMAND OR SYSTEM SAFETY THE UNIT WILL BE SET AS FOLLOWS:
SUPPLY FAN WILL BE OFF, GAS DUCT FURNACE WILL BE OFF, COMPRESSORS(S) WILL BE OFF, EF-1 DEENERGIZED, AND THE OUTSIDE AIR DAMPER WILL BE CLOSED.

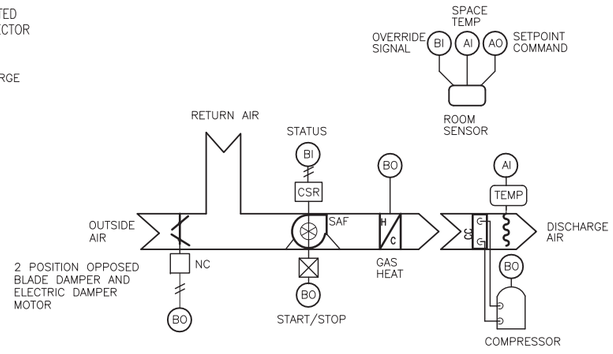

GAS FURNACE CONTROL (GF-1 & GF-2)

SEQUENCE OF OPERATION
THE SYSTEM SHALL BE PLACED IN OCCUPIED MODE OR UNOCCUPIED MODE OF OPERATION AUTOMATICALLY BY THE DDC BASED ON A TIME SCHEDULE OR BY A MANUAL COMMAND. WHEN THE UNIT IS PLACED IN THE OCCUPIED MODE THE OUTSIDE AIR DAMPER SHALL OPEN TO ITS MINIMUM POSITION AND THE UNIT SUPPLY FAN WILL BE ENERGIZED, THE SUPPLY FAN SHALL RUN CONTINUOUSLY WHEN THE SYSTEM IS IN THE OCCUPIED MODE. THE OPPOSITE SHALL OCCUR IN THE UNOCCUPIED MODE. DURING THE UNOCCUPIED MODE THE OUTSIDE AIR DAMPER SHALL BE CLOSED.

ON A RISE ABOVE SPACE TEMPERATURE SETPOINT (75°F ADJUSTABLE) THE UNIT'S COOLING SHALL BE INDEXED TO MAINTAIN THE SPACE TEMPERATURE SETPOINT. ON A FALL BELOW SPACE TEMPERATURE SETPOINT (70°F ADJUSTABLE) THE UNIT'S HEATING SHALL BE ENERGIZED TO MAINTAIN SETPOINT.

WHEN THE SYSTEM IS IN THE UNOCCUPIED MODE THE SYSTEM SHALL BE CONTROLLED TO MAINTAIN SETUP TEMPERATURE SETPOINT (85°F ADJUSTABLE) AND SETBACK TEMPERATURE SETPOINT (65°F ADJUSTABLE).

A TIMED LOCAL OVERRIDE CONTROL SHALL ALLOW AN OCCUPANT TO OVERRIDE THE SCHEDULE AND PLACE THE SYSTEM INTO AN OCCUPIED MODE FOR AN ADJUSTABLE PERIOD OF TIME. AT THE EXPIRATION OF THIS TIME, CONTROL OF THE SYSTEM SHALL RETURN TO THE SCHEDULE.

WHEN THE UNIT IS SHUTDOWN BY EITHER A STOP COMMAND OR SYSTEM SAFETY THE UNIT WILL BE SET AS FOLLOWS:
SUPPLY FAN WILL BE OFF, COMPRESSORS(S) WILL BE OFF, AND THE OUTSIDE AIR DAMPER WILL BE CLOSED.

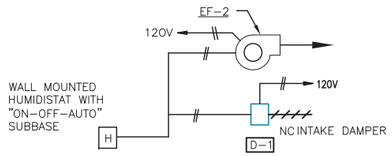

ATTIC VENTILATION CONTROL

SEQUENCE OF OPERATION
WHEN THE SPACE RISES ABOVE HUMIDITY SETPOINT (60% RH ADJUSTABLE) THE HUMIDISTAT SHALL OPEN THE INTAKE DAMPER AND ENERGIZE THE EXHAUST FAN TO MAINTAIN SPACE HUMIDITY.

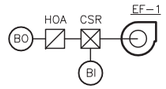

EXHAUST FAN CONTROL

THE EXHAUST FAN SHALL BE INTERLOCKED WITH AHU-1. THE FAN SHALL RUN ENERGIZE AND RUN CONTINUOUSLY WHEN THE SYSTEM IS IN THE OCCUPIED MODE. THE EXHAUST FAN SHALL DE-ENGERGIZE IN THE UNOCCUPIED MODE.

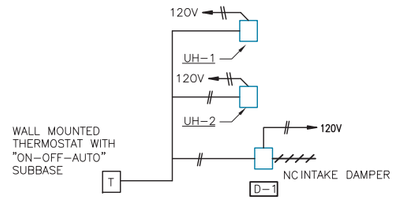

ATTIC UNIT HEATER CONTROL

SEQUENCE OF OPERATION
WHEN THE SPACE FALLS BELOW TEMPERATURE SETPOINT (45°F ADJUSTABLE) THE THERMOSTAT SHALL ENERGIZE (OPEN) THE INTAKE DAMPER AND ENERGIZE GAS UNIT HEATERS 1 AND 2 TO MAINTAIN SPACE TEMPERATURE. ON A RISE ABOVE SPACE TEMPERATURE SETPOINT THE OPPOSITE WILL OCCUR.

RECORD DRAWING LETTER DATED 09/22/09

APPR	DATE	DESCRIPTION
RWB	09/22/09	AS-BUILT
WSW	03/21/08	ISSUED FOR CONSTRUCTION

NAVFAC
Mortenson construction
TranSystems AE LOGO

COMMONWEALTH OF VIRGINIA
PROFESSIONAL ENGINEER
R. W. BROWN
LIC. NO. 10267
3-21-2008
SEAL

DES JAE | DRW JAE
REVIEWED BY RWB
PM/DM
CHIEF ENG/ARCH

DEPARTMENT OF THE NAVY
NAVAL FACILITIES ENGINEERING COMMAND ~ MID-ATLANTIC
HAMPTON ROADS IPT ~ PWD NORFOLK
NAVAL STATION ~ NORFOLK, VA
CHAMBERS FIELD
NORFOLK, VIRGINIA
P201V
AIRCRAFT MAINTENANCE HANGAR
SP-108 CHAPEL
CONTROL SCHEMATICS

CODE ID. NO. 80091 | SIZE D
SCALE: NONE
MAXIMO NO.
STA. PROJ. NO. P-201V
WORK ORDER NO.
CONSTR. CONTR. NO. N62472-01-D-0077
NAVFAC DRAWING NO. 12553444
SHEET 405 OF 525

M-701C

DRAWFORM REVISION: 01 MAY 2006

REVDATE: