V-61 Record Drawings

ABBREVIATIONS

A AIR
AAD AUTOMATIC AIR DAMPER
AAV AUTOMATIC AIR VENT
AC AIR CONDITIONING UNIT
ACC AIR COOLED CONDENSER
ACOMP AIR COMPRESSOR
ACU AIR COOLED CONDENSING UNIT
ACV ALARM CHECK VALVE
AD ACCESS DOOR
AD AREA DRAIN
AD AIR DRYER
ADP APPARATUS DEW POINT
AFF ABOVE FINISHED FLOOR
AL ALUMINUM
AMD AIRFLOW MEASURING DEVICE
AP ACCESS PANEL
AQ AQUASTAT
AS AIR SEPARATOR
AF/R AIR FILTER REGULATOR
AR ARGON

BAV BALL VALVE
BD BLOWDOWN
BD BUTTERFLY DAMPER
BDD BACKDRAFT DAMPER
BF BOOSTER FAN
BFPR BACKFLOW PREVENTOR
BFV BUTTERFLY VALVE
BHP BRAKE HORSEPOWER
BLDG BUILDING
BOD BOTTOM OF DUCT
BOG BOTTOM OF GRILLE
BOP BOTTOM OF PIPE
BT BUCKET STEAM TRAP
BTUH BRITISH THERMAL UNIT PER HOUR
BWV BACKWATER VALVE

C CELSIUS (DEGREES)
C COMMON PORT
C CONVECTOR
C/C CENTER TO CENTER
CA COMPRESSED AIR
CB CATCH BASIN
CC COOLING COIL
CD CEILING DIFFUSER
CF CHEMICAL FEED FUNNEL
CFM CUBIC FEET PER MINUTE
CFP CHEMICAL FEED PUMP
CFS CUBIC FEET PER SECOND
CH CHILLER
CHP CHILLED WATER PUMP
CHR CHILLED WATER RETURN
CHS CHILLED WATER SUPPLY
CHR(L) CHILLED WATER RETURN - LABORATORY
CHS(L) CHILLED WATER SUPPLY - LABORATORY
CI CAST IRON
CO CLEANOUT
CONC CONCRETE
COND CONDENSER
COP COPPER
CR CONTROL AIR
CS CUP SINK
CS CARBON STEEL
CT COOLING TOWER
CUH CABINET UNIT HEATER
CV CHECK VALVE
CVC CONSTANT VOLUME CONTROL
CWP CONDENSER WATER PUMP
CWR CONDENSER WATER RETURN
CWS CONDENSER WATER SUPPLY
CW COLD WATER

D DAMPER (BALANCING)
DB DECIBEL
DB DRY BULB TEMPERATURE
DDCP DIRECT DIGITAL CONTROL PANEL
DF DRINKING FOUNTAIN
DH DOOR HEATER
DIA DIAMETER
DIW DEMINERALIZED OR DEIONIZED WATER
DL DOOR LOUVER
DM DAMPER MOTOR
DN DOWN
DNS DAY NIGHT SELECTOR SWITCH
DP DIFFERENTIAL PRESSURE INDICATOR
DR DRAIN
DS DOWNSPOUT
DW DISTILLED WATER
DWG DRAWING

EA EXHAUST AIR
EBH ELECTRIC BASIN HEATER
EEW EMERGENCY EYE WASH
EF EXHAUST FAN
EG EXHAUST AIR GRILLE
EJ EXPANSION JOINT
EL ELEVATION
ELECTRIC PNEUMATIC SWITCH (SEE SOV)
ER EXHAUST AIR REGISTER
ESH EMERGENCY SHOWER
ESP EXTERNAL STATIC PRESSURE
ET EXPANSION TANK
ETA EXHAUST TO ATMOSPHERE
EVAP EVAPORATOR
EVC EVAPORATIVE COOLER
EWC ELECTRIC WATER COOLER
EWH ELECTRIC WATER HEATER
EXP VAL EXPANSION VALVE
EXT EXTRACTOR

F FAHRENHEIT (DEGREES)
FLTR FILTER
F FIRE PROTECTION WATER
FC FAN COIL UNIT
FCV FLOW CONTROL VALVE
FD FLOOR DRAIN
FDD FIRE DAMPER
FDF FORCED DRAFT FAN
FDR FOOTING DRAIN
FE FIRE EXTINGUISHER
FE FLOW ELEMENT
FEC FIRE EXTINGUISHER CABINET
FH FIRE HYDRANT
FH FUME HOOD
FHC FIRE HOSE CABINET
FHS FIRE HOSE STATION
FIRE PROTECTION TEMPERATURE SWITCH (SEE SU)
FL FLOOR
FLT SW FLOAT SWITCH
FM FORCE MAIN
FMD FLOW MEASURING DEVICE
FND FOUNDATION

FPM FEET PER MINUTE
FPS FEET PER SECOND
FR FLOW RECORDER
FS FLOW SWITCH
F&T FLOAT AND THERMOSTATIC STEAM TRAP
FT FLOW TRANSMITTER
FT FOOT (FEET)
FT FLASH TANK
FTG FOOTING
FTR-I-3-L7 FINNED TUBE RADIATION, TYPE I, 3' ACTIVE LENGTH, L7 mbh
FT HD FEET OF HEAD
FU FIXTURE UNIT
FV FLOAT VALVE
FWH FEED WATER HEATER
FZ FREEZE PROTECTION TEMPERATURE SWITCH (FREEZESTAT)

G NATURAL GAS
GAL GALLON (S)
GALV GALVANIZED
GD GARBAGE DISPOSER
GFE GOVERNMENT FURNISHED EQUIPMENT
GHX GLYCOL HEAT EXCHANGER
GI GALVANIZED IRON
GLV GLOBE VALVE
GPH GALLONS PER HOUR
GPM GALLONS PER MINUTE
GV GATE VALVE

H HUMIDISTAT
HB HOSE BIBB
HC HEATING COIL
HE HOOD EXHAUST
HFU HEPA FILTERED UNIT
HGR HANGER
HI HUMIDITY INDICATOR
HM HUMIDIFIER
HMS HOSE MIXING STATION
HO H.B. OUTLET
HOA HAND OFF AUTOMATIC
HORIZ HORIZONTAL
HP HORSEPOWER
HVAC HEATING, VENTILATING, AND AIR CONDITIONING
HW HOT WATER (DOMESTIC)
HWC HOT WATER CIRCULATING
HWH DOMESTIC WATER HEATER
HWCP HOT DOMESTIC WATER CIRCULATING PUMP
HWP HEATING HOT WATER PUMP
HWR HEATING HOT WATER RETURN
HWS HEATING HOT WATER SUPPLY
HX HEAT EXCHANGER
HZ HERTZ

IE INVERT ELEVATION
IN INCH (ES)
ID INSIDE DIAMETER
IDF INDUCED DRAFT FAN
IPS IRON PIPE SIZE
IW INDUSTRIAL WASTE
IWV INDUSTRIAL WASTE VENT
KW KILOWATT

L LOUVER
LAV LAVATORY
LAB LABORATORY
LB/HR POUNDS PER HOUR
LC LEVEL CONTROLLER
LCV LEVEL CONTROL VALVE
LD LINEAR DIFFUSER
LI LEVEL INDICATOR
LS LEVEL SWITCH
LSH LEVEL SWITCH-HIGH
LSL LEVEL SWITCH-LOW
LT LEVEL TRANSMITTER

MTR MOTOR
MAV MANUAL AIR VENT
MAX MAXIMUM
MB MIXING BOX
MCC MOTOR CONTROL CENTER
MF MIXING FAUCET
MH MANHOLE
MI MOISTURE INDICATOR
MIN MINIMUM
MS MANUAL STARTER
MSB MOP SERVICE BASIN
MT MOISTURE INDICATOR
MT MOUNT (ED)(ING)

N2 NITROGEN
NC NORMALLY CLOSED
NEC NATIONAL ELECTRICAL CODE
NEMA NATIONAL ELECTRICAL MANUFACTURERS ASSOCIATION
NO NORMALLY OPEN
NTS NOT TO SCALE
NGEN NITROGEN GENERATOR

O2 OXYGEN
OA OUTDOOR AIR
OC ON CENTER
OD OUTSIDE DIAMETER
OPG OPENING
OZ OUNCE

P PLUMBING FIXTURE
P PROPANE
P PUMP
P PERFORATED DRAIN PIPE
PA PIPE ANCHOR
PA PLANT AIR
PNEUMATIC ELECTRIC SWITCH (SEE PS)
PC PRESSURE CONTROLLER
PC PUMPED CONDENSATE
PCV PRESSURE CONTROL VALVE
PD PROCESS DRAIN (LABORATORY)
PD PUMPED DISCHARGE
PE PROCESS EXHAUST
PG PIPE GUIDE
PHC PREHEAT COIL
PI PRESSURE INDICATOR (GAGE)
PIV POST INDICATOR VALVE
PL PROPERTY LINE
PR PRESSURE RECORDER
PRS PRESSURE REDUCING STATION
PRV PRESSURE REDUCING VALVE

PS PRESSURE SWITCH
PSI POUNDS PER SQUARE INCH
PSIA POUNDS PER SQUARE INCH (ABSOULUTE)
PSIG POUNDS PER SQUARE INCH GUAGE
PSL LOW PRESSURE SWITCH
PSS PRESSURE SELECTOR SWITCH
PT PRESSURE TRANSMITTER
PTE PIPE TRACING ELECTRIC
PTS PIPE TRACING STEAM
PVC POLYVINAL CHLORIDE
PW PURIFIED WATER

R RELAY
RA RETURN AIR
RAD REFRIGERATED AIR DRYER
RHC REHEAT COIL
RCMP REFRIGERANT COMPRESSOR
RD ROOF DRAIN
REC RECEIVER-CONTROLLER
RAF RETURN AIR FAN
RG RETURN AIR GRILLE
RH RELATIVE HUMIDITY
RH ROOF HOOD
RHG REFRIGERANT HOT GAS
RL REFRIGERANT LIQUID
RLS-100/200 RETURN LIGHT SLOTS - EXHAUST ON/EXHAUST OFF
RPM REVOLUTION PER MINUTE
RR RETURN AIR REGISTER
RS REFRIGERANT SUCTION
RV RELIEF VALVE

S ( ) STEAM (PRESSURE)
SA SHOCK ABSORBER
SA SUPPLY AIR
SAN SANITARY SEWER (DRAIN)
SANV SANITARY DRAIN VENT
SC ( ) STEAM CONDENSATE (PRESSURE)
SCP STEAM CONDENSATE PUMP
SCV SECTION CONTROL VALVE
SAF SUPPLY AIR FAN
SG SUPPLY AIR GRILLE
SH SHOWER
SHT SHEET
SK SINK
SOV SOLENOID OPERATED VALVE
SP SPRINKLER HEAD
SP STATIC PRESSURE
SP SUMP PUMP
SPD SPLITTER DAMPER
SPEC SPECIFICATIONS
SP GR SPECIFIC GRAVITY
SP HT SPECIFIC HEAT
SQ SQUARE
SR SUPPLY AIR REGISTER
SS SANITARY SEWER
SS SERVICE SINK
SS STAINLESS STEEL
ST SOUND TRAP
STS STORM WATER DRAIN
SSA SELECTOR SWITCH (MANUAL)
SV SAFETY VALVE
SW SOFT WATER

T STEAM TRAP
T THERMOSTAT [illegible]
[illegible] THERMAL [illegible]
TAV THERMOSTATIC AIR VENT
TD TRENCH DRAIN
TD THERMODYNAMIC STEAM TRAP
TDH TOTAL DYNAMIC HEAD
TDR TIME DELAY RELAY
TEMP TEMPERATURE
TF TERMINAL FILTER
TG TRANSFER AIR GRILLE
TH THRUST BLOCK
TI TEMPERATURE INDICATOR (GAGE)
TK TANK
TMR TIMER
TOD TOP OF DUCT
TOP TOP OF PIPE
TOS TOP OF STEEL
TP TOTAL PRESSURE
TS TEMPERATURE SWITCH
TSP TOTAL STATIC PRESSURE
TT TEMPERATURE TRANSMITTER
TP TOTAL PRESSURE
TW TREATED WATER

U URINAL
UC UNIT COOLER
UFD UNDER FLOOR DRAIN
UH UNIT HEATER

V VALVE (TEMPERATURE CONTROL)
V VENT
V VENTILATING UNIT
VAC VACUUM
VACP VACUUM PUMP
VAV VARIABLE AIR VOLUME
VAV VARIABLE AIR VOLUME UNIT
VB VACUUM BREAKER
VD VOLUME DAMPER (MANUAL MULTIBLADE)
VEL VELOCITY
VERT VERTICAL
VFC VARIABLE FREQUENCY CONTROL
VIT CLAY PIPE
VP VELOCITY PRESSURE
VTR VENT THRU ROOF

W WASTE
W WATT
WB WET BULB TEMPERATURE
WC WATER CLOSET
WF WASH FOUNTAIN
WG WATER GUAGE (COLUMN)
WH WALL HYDRANT
WP POTABLE WATER - COLD
WPH POTABLE WATER - HOT
WT WEIGHT
WH WATER HEATER

YCO YARD CLEANOUT
YH YARD HYDRANT

ZS LIMIT SWITCH

DUCTWORK SYMBOLS

NOTES:

1. FOR METAL DUCTS - INSULATION ON OUTSIDE - SIZE INDICATED IS DIMENSION OF METAL DUCT. ADD FOR STIFFENERS AND FLANGES TO GET OVERALL DUCT DIMENSION. ADD FOR INSULATION TO GET OVERALL CLEARANCE REQUIRED.

2. FOR LINED DUCTS - SIZE GIVEN IS INSIDE DIMENSION OF LINING. ADD FOR LINING, DUCT THICKNESS, STIFFENERS AND FLANGES GET OVERALL CLEARANCE REQUIRED.

12" Ø — 12" DIAMETER ROUND DUCT
10 X 12 — RECTANGULAR OR SQUARE DUCT. FIRST NUMBER INDICATED DIMENSION OF SIDE SHOWN SECOND INDICATED SIDE NOT SHOWN.
10 X 12 — LINED DUCT
T 12 X 8 T / 14 X 10 B — DUCT INDICATION FOR STACKING - T=TOP DUCT, B=BOTTOM DUCT
20 X 6 — SUPPLY DUCT SECTION: FIRST NUMBER INDICATES HORIZONTAL DIMENSION IN VIEW. SECOND NUMBER INDICATES VERTICAL DIMENSION IN VIEW.
20 X 6 — EXHAUST OR RETURN DUCT SECTION: FIRST NUMBER INDICATES HORIZONTAL DIMENSION IN VIEW, SECOND NUMBER VERTICAL DIMENSION IN VIEW
SUPPLY DUCT TURNING TOWARD VIEWER
SUPPLY DUCT TURNING AWAY FROM VIEWER
RETURN OR EXHAUST DUCT TURNING TOWARD VIEWER
RETURN OR EXHAUST DUCT TURNING AWAY FROM VIEWER
TURNING VANES IN DUCT ELBOWS
SPLITTER DAMPER AT DUCT BRANCH (STD)
D — BALANCING DAMPER (D)
AAD — AUTOMATIC DAMPER
FDD — FIRE DAMPER (FDD)
D — INCLINED DROP IN RESPECT TO AIR FLOW
R — INCLINED RISE IN RESPECT TO AIR FLOW
COIL WITHIN DUCT
FLEXIBLE DUCT CONNECTION
AIR EXTRACTOR AT DUCT BRANCH
12 X 12 (RR, ER) ONE 12 X 12 RETURN REGISTER (RR), OR EXHAUST REGISTER (ER)
OPPOSED BLADE DAMPERS
PARALLEL BLADE DRAMPERS
12" CD-1700 CFM, 24 X 24 INDICATES 24" X 24" SQUARE CEILING DIFFUSER WITH 12" NECK DIAMETER, TYPE OF DIFFUSER, AND AIR QUANTITY. ARROWS INDICATE DIRECTION OF AIR STREAM
DOOR LOUVER OR AIR FLOW
CEILING DIFFUSER WITH BLANKED OFF SECTION
TOP ELEVATION OF DUCT
BOTTOM ELEVATION OF DUCT
POINT OF CHANGE IN DUCT CONSTRUCTION (BY STATIC PRESSURE CLASS PER SMACNA) N=NEGATIVE PRESSURE
VAV OR CVC
HEATING COIL
SOUND ATTENATOR

PIPING SYMBOLS

SAN — SANITARY SOIL OR WASTE
SANV — SANITARY VENT
IW — INDUSTRIAL WASTE (PROCESS)
IWV — INDUSTRIAL WASTE VENT (PROCESS)
STS — STORM WATER DRAIN OR SEWER
P — PERFORATED DRAINAGE PIPING
F — FIRE LINE
A — COMPRESSED AIR
S(-) — STEAM (PRESSURE)
C(-) — STEAM CONDENSATE (PRESSURE)
P — PROPANE
DR — DRAIN (EQUIPMENT)

PIPE CAP
90 DEG. ELBOW DOWN
90 DEG. ELBOW OR TEE UP
TEE DOWN
TEE UP
PIPE OFFSETTING DOWN AT 45 DEG.
PIPE OFFSETTING UP AT 45 DEG.
PIPE FLANGES
PIPE UNION
PIPE GUIDES
PA OR H — PIPE ANCHOR (PA) OR HANGER (H)
ECCENTRIC REDUCER
CONCENTRIC REDUCE
DIRECTION OF FLOW ARROW
STRAINER
ANGLE VALVE
GATE VALVE
GLOBE VALVE
CHECK VALVE
BUTTERFLY VALVE
PLUG VALVE
BALANCING VALVE WITH MEMORY STOP
CALIBRATED BALANCING VALVE
RELIEF VALVE OR SAFETY VALVE
TYPE — STEAM TRAP (WITH ACCESSORIES)
VALVE IN BOX
BACK WATER VALVE IN BOX
CENTER LINE
FLEXIBLE CONNECTION
THERMOMETER WELL
FD — FLOOR DRAIN
HO — HUB OUTLET
RD — ROOF DRAIN
TRENCH DRAIN
MANHOLE
OR — CATCH BASIN
BALL VALVE

AUTOMATIC CONTROL SYMBOLS

M — MAIN SUPPLY
MI — [illegible] MAIN AIR SUPPLY
PNEUMATIC INSTRUMENT SIGNAL
INSTRUMENT ELECTRICAL WIRING
V — TEMPERATURE CONTROL VALVE (2 WAY) WITHOUT PILOT POSITIONER
V — TEMPERATURE CONTROL VALVE (2 WAY) WITH PILOT POSITIONER
SOV, C, NO, EXH — SOLENOID VALVE (3 WAY)
PCV — PRESSURE CONTROL VALVE
FLOAT VALVE
FCV — FLOW CONTROL VALVE
AUTOMATIC AIR DAMPER [illegible] WITH DAMPER [illegible]
AUTOMATIC AIR DAMPER [illegible]
[illegible]
[illegible] SENSOR
FREEZE PROTECTION TEMPERATURE SWITCH
DIFFERENTIAL PRESSURE SWITCH
A — ANALOG INPUT (TO DDC)
FS — FLOW SWITCH
A — ANALOG INPUT (TO DDC)
AO — ANALOG OUTPUT
D — DIGITAL INPUT
DO — DIGITAL OUTPUT
HTR — HEATER
VFC — VARIABLE FREQUENCY CONTROL

M-1

A.M. KINNEY, INC.
CONSULTING ENGINEERS
CINCINNATI, OHIO

DEPARTMENT OF THE NAVY — NAVAL FACILITIES ENGINEERING COMMAND
ATLANTIC DIVISION
NAVAL STATION — NORFOLK, VIRGINIA

EFD DWG. NO. 289156
CONST. ORDER NO. SF5215
CONST. PROJ. NO. P-241
DES. RAB — DRAWN RAA
PROJ. MGR. JBKY — CH. ARCH/ENG/SPECS
EFD BR. HWC — FIRE PROT. mtc
BR. MGR. [signature] — CHF. ENG. [signature]

NAVAL [illegible] FACILITY
[illegible]
MATERIALS/STANDARDS LABORATORY FACILITY
SYMBOLS AND ABBREVIATIONS

STATE OF OHIO — R. C. WIER — 24645 — REGISTERED PROFESSIONAL ENGINEER

APPROVED — DATE
ACTIVITY SATISFACTORY TO
APPROVED [signature] 3/27/89
FOR EFD [illegible]

SIZE F — CODE IDENT. NO. 80091 — NAVFAC DRAWING NO. 4189156
CONSTR. CONTR. NO. N62470-85-B-5215
SCALE NONE — SPEC. 05-85-5215 — SHEET 67 OF 105

REVISIONS			
SYM	DESCRIPTION	DATE	APPROVED

HANGAR V-147

EXIST CONC PAVEMENT

NEW CONC PAVEMENT

NEW ELEC. M.H.

EXIST CONC. PAVEMENT

566.65' BASE LINE "C"

EXIST IW MH

CT-1 SEE DET. M-2

CT-2 M-2

2" CW 10" CWR 10" CWS (UNDERGROUND)

NEW ELEC. M.H.

POINT "C"

1/2" SC-125

BOTTOM OF WELL ELEV. 4.50

IE 7.00

4' CONDENSATE DRAIN

℄ EL. 7.00

℄ EL. 7.17

RECEIVING AREA

RAMP DOWN

NEW DI #5

NEW SUB STATION

℄ EL. 5.00

IE 7.71'

3" SC-125

IE 7.50'

48" I.D. COOLING WELL SEE DETAIL

STEAM MANHOLE SEE DETAIL M-2

OUTSIDE OF FOUNDATION

MODIFIED EXIST. M.H.

NEW ELEC. M.H.

NEW GRASS

NEW BUS SHELTER 28' x 8.5'

NEW 10' W.L.K.

RAMP DOWN

MATERIALS/STANDARDS LABORATORY FACILITY

FIRST FLOOR ELEV. 11.00

LIMITS OF EXCAVATION AND RECOMPACTION (SEE NOTE #1)

NEW DI #3 ON EXIST. 12" ⌀ SD

NEW ELEC. M.H.

NEW GRASS

NEW TEL M.H.

RAMP DOWN

NEW SAN. MH

EXIST DI #1

478.85 ℄

FOURTH AVENUE

NEW CURB

NEW 4' WALK

EXIST DI #2

478.85' BASE LINE A

NAIL

CONNECT TO EXIST. 6" SAN

EXIST 6" SAN (VIF)

3" CONDENSATE DRAIN

IE 6.00'± (VIF)

BOTTOM OF COOLING WELL ELEV. 5.00'

APPROX. IE 7.67'

APPROX. IE 8.00'

4" S-125 (UNDERGROUND)

36" I.D. COOLING WELL SEE DETAIL 10 M-2 M-11

STEAM M.H. SEE DETAIL A M-2

POINT "B"

BELLINGER BOULEVARD

234.90' BASE LINE "B"

NAIL

TOW WAY

183.90' BASE LINE "D"

80.26'

80.50'

BASE LINE NAIL

NEW ASPHALT PAVEMENT

BLDG. V-66

18' STS

48' STS ELECTRIC 4" SAN 12" CW

POINT "A"

12" STEAM 6" G 4" CW

BLDG. V-52

4" S-125 ABOVE GROUND

BRACKET PIPE HANGERS FROM EXISTING BLDG. WALL

EXIST 12" S-125 (℄ ELEV. 32.5'±)

NOTE
FOR ADDITIONAL INFORMATION, REFER TO PHOTOSKETCHES IN APPENDIX D OF THE SPECIFICATIONS.

SITE PLAN
SCALE: 1" = 25'

PLAN

36" SOLID MANHOLE LID & FRAME

4" S-125

1 1/2" SC-125 TO COOLING WELL

STEAM PIPE CONDUIT

MANHOLE STEPS

2 #5 ADDITIONAL IN BOTTOM AT OPNG.

23" MANHOLE FRAME & SOLID LID

MANHOLE STEPS

A M-2

PLAN VIEW

NOTE
FOR PIPING ORIENTATION SEE SITE PLAN.

ELECTRIC DUCT

4" S-125 (POINT "C")

3" SC-25

STEAM MANHOLE

4" CW

TELEPHONE DUCT

STEAM PIPE CONDUIT (4" S-125)

POINT "B"

GRADE

10'
8'
6'
4'
2'
0'

PROFILE-UNDERGROUND S-125 (EAST-WEST RUN)
SCALE: 1" = 25' HORIZ.; 1" = 5' VERT.

SOLID MANHOLE LID & FRAME

GRADE

2'-0" TYPICAL

#4 @ 12'

2 #5

REINFORCED CONCRETE

#4 @ 12'

4" S-125

#4 @ 12' VENT (TYP)

STEAM PIPE CONDUIT

#4 @ 10'

3/4" SC-125

DRAIN (TYP.)

LEAK PLATE (TYP.)

LINE DRIP

SLOPE FLOOR TO SUMP

SLEEVE SEAL (TYPICAL)

WATERSTOP (TYPICAL)

#4 @ 12' EW

A M-2

SECTION

STEAM MANHOLE DETAIL
SCALE: 3/8" = 1'-0" 2 M-2

POINT "B"

STEAM MANHOLE

STEAM PIPE CONDUIT (4" S-125)

PROFILE-UNDERGROUND S-125 (NORTH-SOUTH RUN)
SCALE: 1" = 25' HORIZ.; 1" = 5' VERT.

ELEVATIONS OF PIPING & ELECTRIC TO BE VERIFIED IN FIELD.

18" STS

TOW WAY

4" CW 6" STEAM 12" CW 14" SAN

ELECTRIC

48" STS

POINT "A"

GRADE

4" S-125 WATERSHED

10'
8'
6'
4'
2'
0'

4 ELEV. 55'

2" CW

10" CWR

10" CWS

8" CWR

6" CWR

6" CWR

8" CWR

6" CWR

6" CWR

4"

8"

CT-1

CT-2

10" CWR BYPASS

M.H.

10" CWS

2" CW

8" CWS

8" CWS

PLAN

MANUAL BUTTERFLY VALVES

6" CWR

8" CWR

8" CWR

6" CWR

10" CWR

CT-1

CT-2

2" CW MAKE-UP

10" CWR

10" CWS

NOTE:
FOR COOLING TOWER SUMP PAD & SUPPORT DETAILS SEE PAGES 12

8" CWS

8" CWS

INSULATE VERTICAL PORTION ONLY OF UNDERGROUND CWR LINES

10" CWS

10" CWR

2" CW

10" CWS

ELEVATION

COOLING TOWER DETAIL
SCALE: 1/4" = 1'-0" M-2 M-2

NOTE
ELEVATIONS ARE BASED ON J.S.G.S. DATUM, 0.00 = MEAN SEA LEVEL.

M-2

A.M. KINNEY, INC.
CONSULTING ENGINEERS
CINCINNATI OHIO

DEPARTMENT OF THE NAVY — NAVAL FACILITIES ENGINEERING COMMAND
ATLANTIC DIVISION
NAVAL STATION — NORFOLK, VIRGINIA

NAVAL AIR REWORK FACILITY
NORFOLK, VIRGINIA
MATERIALS/STANDARDS LABORATORY FACILITY
SITE PLAN

EFD DWG NO.	265167
JOB ORDER NO.	9F5215
STA PROJ NO.	P-241
DES. RBC	DRWN. RBC
PROJ MGR. JHKY	CH ARCH ENGR. JBS
FFD PM	FP
BR MGR	DES DIR
APPROVED	DATE
ACTIVITY - SATISFACTORY TO	
APPROVED	DATE 3/27/89
FOR SFD FOR COMMANDER NAVFAC	

STATE OF OHIO — R. C. WIER — 26548 — PROFESSIONAL ENGINEER

SIZE	CODE IDENT NO.	NAVFAC DRAWING NO.
F	80091	4189167

CONSTR CONTR NO. N62470-85-B-3015

SCALE AS NOTED — SPEC 05-85-5215 — SHEET 68 OF 105

REVISIONS			
SYM	DESCRIPTION	DATE	APPROVED

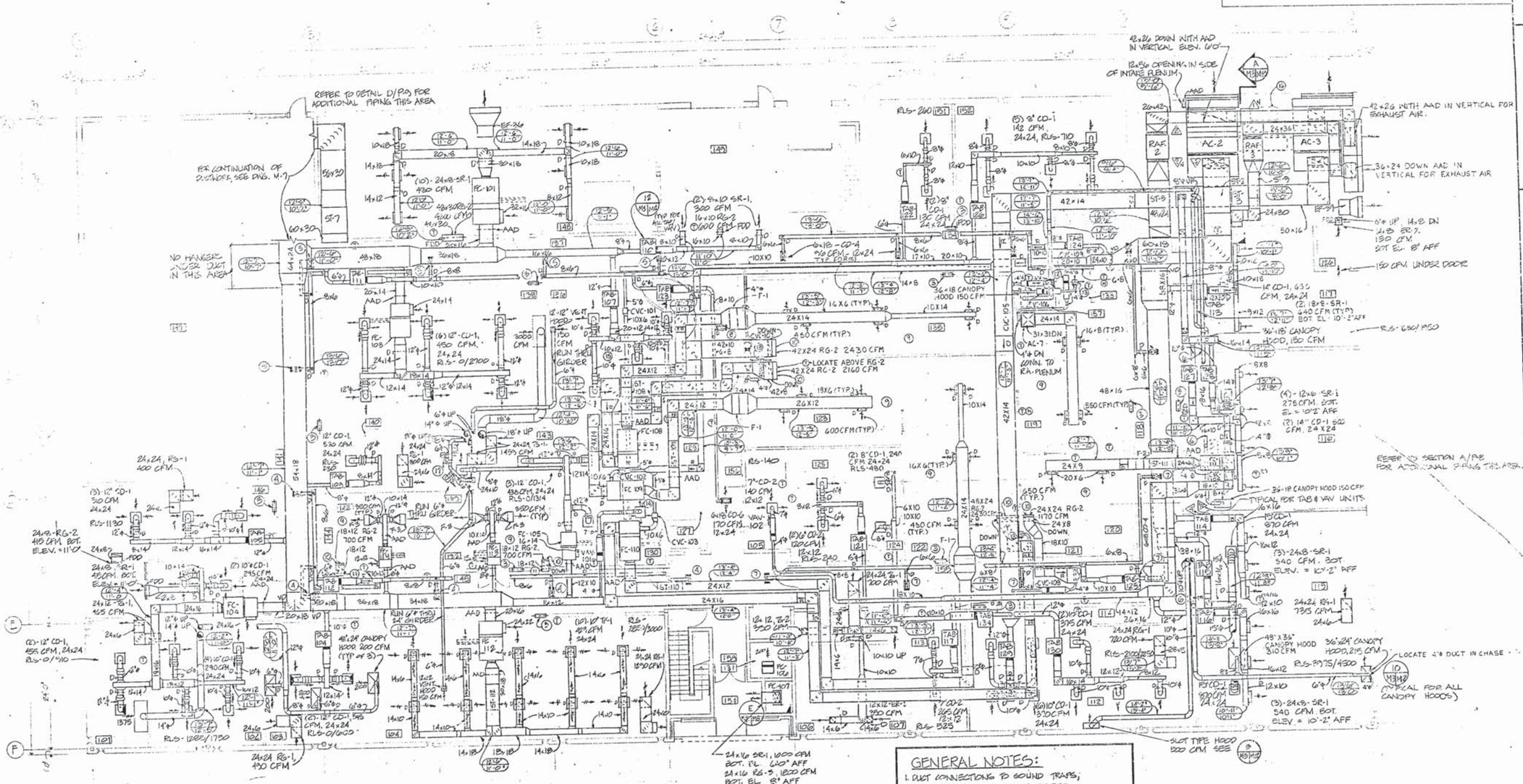

NOTES:

1. 24x24 - RG-1, 1600 CFM.
2. 24x24 - RG-1, 1000 CFM
3. 24x18 FDD FOR RETURN AIR MOVEMENT.
4. 6x6 DUCT TO 6x18 CD-4, 85 CFM, 12x24.
5. 6x6 DUCT TO 6x18 CD-4, 24 CFM, 12x24
6. RUN DUCT THROUGH GIRDER.
7. 6x6 DUCT TO 6x18 CD-4, 95 CFM, 12x24
8. 6x6 DUCT TO 6x18 CD-4, 170 CFM, 12x24
9. THESE ROOMS SHALL HAVE PERFORATED CEILING SYSTEMS
10. LOCATE RG-2 8" AFF
11. 18x12 FDD FOR RETURN AIR MOVEMENT
12. 6" CD-3 - 150 CFM, 24x24
13. 4" CD-3 - 76 CFM, 12x12
14. 7" CD-2 - 140 CFM, 12x12 RLS-140
15. (5) 10" CD-1 - 336 CFM, 24x24 RLS-1530/1680
16. PROCESS CHILLER, TO BE INSTALLED BY GOVERNMENT AT A LATER DATE

17. 8" CD-1, 240 CFM, 24x24 - RLS-0/240
(3) 18"x12" CANOPY HOODS @ 100 CFM EA.

GENERAL NOTES:

1. DUCT CONNECTIONS TO SOUND TRAPS, TAB'S & VAV'S SIZED AS REQUIRED TO MATCH UNIT OPENINGS.
2. COORDINATE CEILING DIFFUSER & GRILLE LOCATIONS WITH ARCHITECTURAL REFLECTED CEILING PLAN (DWGS. A-19 & A-20)

GRAPHIC SCALE: 1/8"=1'-0" 0 5 10 20 40

M-3

A.M. KINNEY, INC.
CONSULTING ENGINEERS
CINCINNATI OHIO

DEPARTMENT OF THE NAVY NAVAL FACILITIES ENGINEERING COMMAND
ATLANTIC DIVISION
NAVAL STATION NORFOLK, VIRGINIA

NAVAL AIR REWORK FACILITY
NORFOLK, VIRGINIA
MATERIALS/STANDARDS LABORATORY FACILITY
FIRST FLOOR DUCTWORK PL.

EFD DWG NO	289168
JOB ORDER NO	SF5215
STA PROJ NO	P-241
DES RAB	DRWN RAB
PROJ MGR JHK	CH ARCH ENGR
EFD RVD	FP
BR MGR	DES DIR
APPROVED	DATE
ACTIVITY - SATISFACTORY TO	
APPROVED	DATE 3/27/89
FOR EFD FOR COMMANDER NAVFAC	

STATE OF OHIO R. C. WIER 24646 PROFESSIONAL ENGINEER

SIZE	CODE IDENT NO	NAVFAC DRAWING NO
F	80091	4189168
		CONSTR CONTR NO N62470-85-B-5215
SCALE 1/8"=1'-0"	SPEC 05-85-5215	SHEET 69 OF 105

REVISIONS			
SYM	DESCRIPTION	DATE	APPROVED

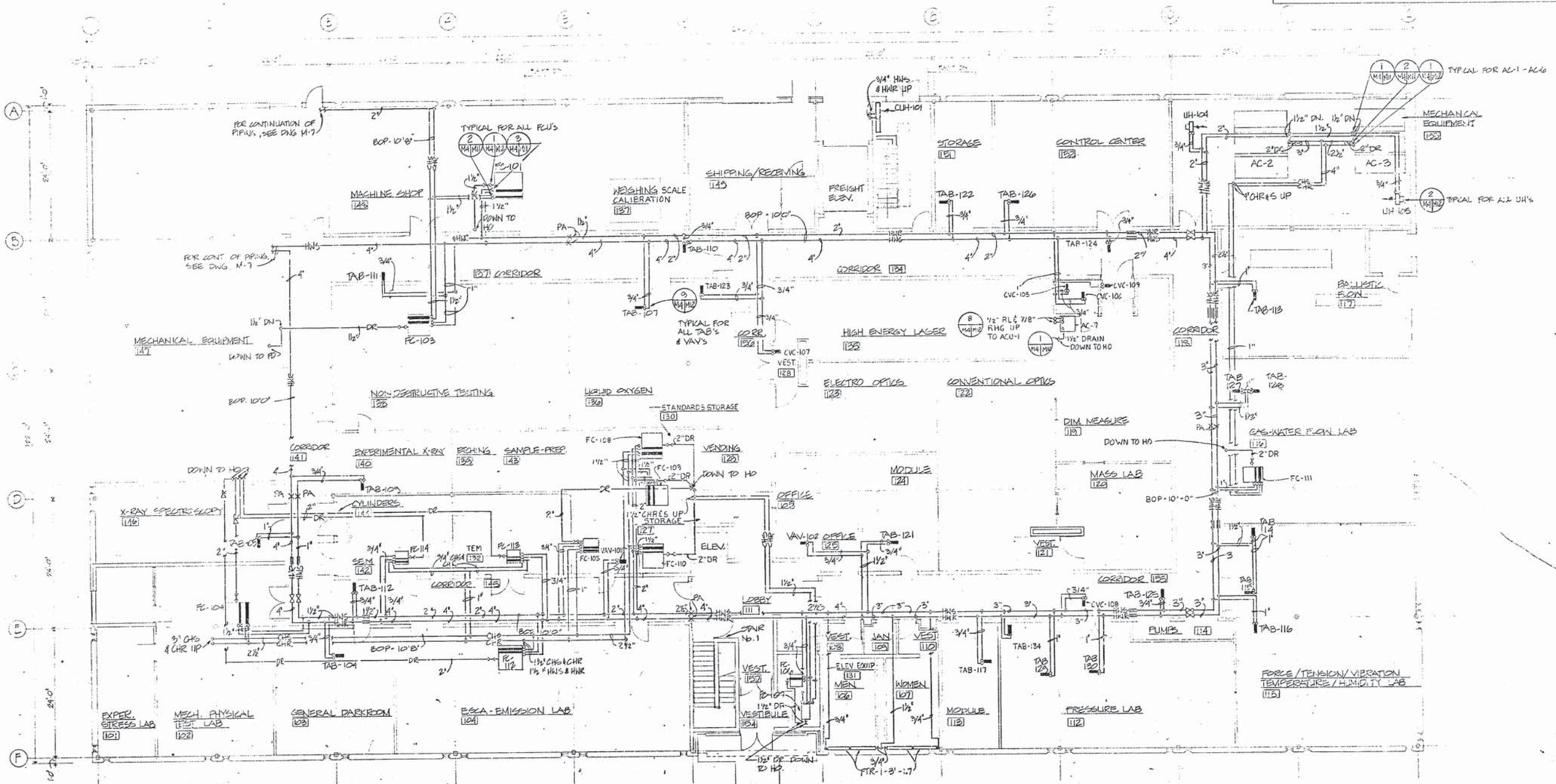

A.M. KINNEY, INC. CONSULTING ENGINEERS CINCINNATI, OHIO	DEPARTMENT OF THE NAVY NAVAL FACILITIES ENGINEERING COMMAND ATLANTIC DIVISION NAVAL STATION NORFOLK, VIRGINIA
EFD DWG NO 2891169	NAVAL AIR REWORK FACILITY NORFOLK, VIRGINIA
JOB ORDER NO 5F5215	MATERIALS/STANDARDS LABORATORY FACILITY
STA. PROJ NO P-241	FIRST FLOOR PIPING PLAN
DES RAB DRWN RAB	
PROJ MGR JKY CH ARCH ENGR JSG	
EFD RVD JKC FP JTC	
BR MGR FP DES DIR JHF	
APPROVED DATE	
ACTIVITY - SATISFACTORY TO	
APPROVED DATE 3/27/89	
FOR EFD FOR COMMANDER N.A.F.	
SIZE F	CODE IDENT NO 80091
NAVFAC DRAWING NO 4189169	
CONSTR CONTR NO N62470-85-B-5215	
SCALE 1/8"=1'-0"	SPEC 05-85-5215
SHEET 70 OF 105	

M-4

STATE OF OHIO R. C. WIER 21646 REGISTERED PROFESSIONAL ENGINEER

REVISIONS			
SYM	DESCRIPTION	DATE	APPROVED

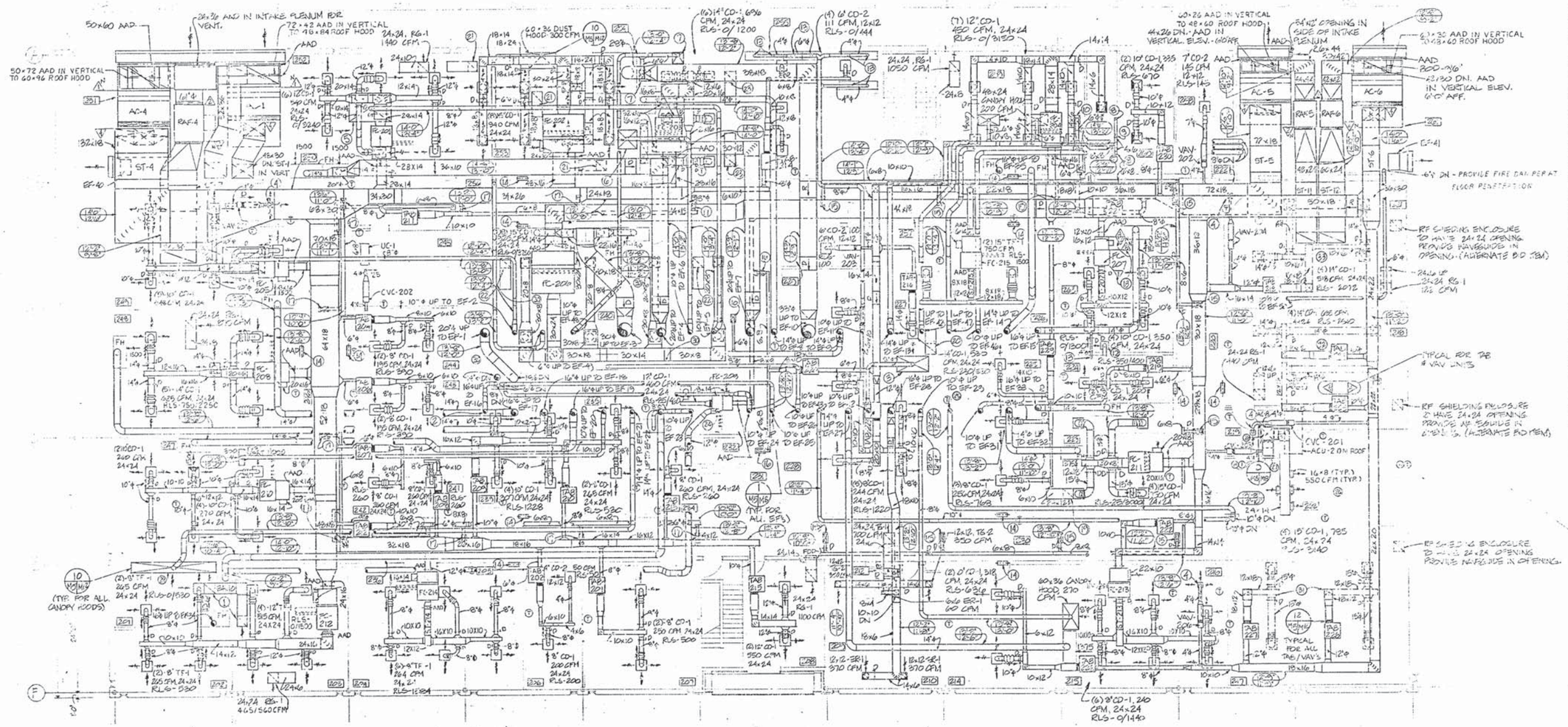

NOTES:

1. 24"×24" TE-1 1595 CFM.
2. 10"Ø UP TO EF-44 ON ROOF.
3. 48×36 CANOPY HOOD, 300 CFM.
4. 4" CD-3, 75 CFM.
5. 30×60 CANOPY HOOD, 410 CFM.
6. 42×42 CANOPY HOOD, 235 CFM.
7. 24×24 CANOPY HOOD, 135 CFM.
8. 6×4 DOWN TO 12" AFF, 75 CFM. PROVIDE 1/2" MESH GALV. HARDWARE CLOTH AT END.
9. 4×6 ER-2, 50 CFM.
10. 18×10 VENT HOOD, 125 CFM.
11. 18×18 CANOPY HOOD, 100 CFM.
12. 12×12 VENT HOOD, 100 CFM.
13. 2" CONNECTION DOWN TO FLAMABLE STORAGE CABINET, 50 CFM
14. 24×18 FIRE DAMPER FOR RETURN AIR. BOT. EL. = 11'-0"
15. 6×6 BRANCH W/ BAL. DMPR. TO 6×18 CD-4, 180 CFM, 12×24
16. 6×6 BRANCH W/ BAL. DMPR. TO 6×18 CD-6, 100 CFM, 12×24
17. 6×6 BRANCH W/ BAL. DMPR. TO 6×18 CD-4, 100 CFM, 12×24
18. TYPICAL FOR FC UNITS.
19. 24×24 RG-1, 1800 CFM
20. 24×24, RG-1, 230 CFM, 24×6 DUCT.
21. 24×24, RG-1, 1975 CFM, 24×12 DUCT.
22. 24×24, RG-1, 1975 CFM, 24×12 DUCT
23. 24×24, RG-1, 1486 CFM, 24×12 DUCT
24. 10"Ø UP TO EF-45
25. 10"Ø UP TO EF-30
26. ROOM SHALL HAVE PERFORATED CEILING SYSTEM
27. 24×36 RG-2 LOCATE 8' AFF.
28. 31-31 DOWN TO AC-8
29. 16×2 CANOPY HOOD, 750 CFM
30. CONTRACTOR SHALL PROVIDE 36×18 CANOPY HOOD. 150 CFM 8"Ø NECK, AT THIS LOCATION AND CONNECT HOOD WITH 10×8 DUCT TO EF-9
31. PROVIDE PHANTOM-LINE DUCTWORK LOCATED WITHIN SHIELDING ENCLOSURE UNDER BASE BID. ELBOW 18×12 DOWN & PROVIDE FLEXIBLE CONNECTION ABOVE RF SHIELDING ENCLOSURE. PROVIDE WAVEGUIDE AT PENETRATION OF ENCLOSURE.
32. PROVIDE PHANTOM-LINE DUCTWORK. AS AN ALTERNATE BID ITEM, PHANTOM-LINE DUCTWORK TO BE LOCATED IN SHIELDING ENCLOSURE. ELBOW 16×12 DOWN & PROVIDE FLEXIBLE CONNECTION ABOVE ENCLOSURE. PROVIDE WAVEGUIDE AT PENETRATION OF ENCLOSURE.
33. PROVIDE PHANTOM-LINE DUCTWORK. AS AN ALTERNATE BID ITEM, PHANTOM-LINE DUCTWORK TO BE LOCATE IN SHIELDING ENCLOSURE. ELBOW 18×16 DOWN & PROVIDE FLEXIBLE CONNECTION ABOVE ENCLOSURE. PROVIDE WAVEGUIDE AT PENETRATION OF ENCLOSURE.

GRAPHIC SCALE: 1/8"=1'-0" 0 5 10 20 40

M-5

A.M. KINNEY, INC.
CONSULTING ENGINEERS
CINCINNATI OHIO

DEPARTMENT OF THE NAVY NAVAL FACILITIES ENGINEERING COMMAND
ATLANTIC DIVISION
NAVAL STATION NORFOLK, VIRGINIA

NAVAL AIR REWORK FACILITY
NORFOLK, VIRGINIA
MATERIALS/STANDARDS LABORATORY FACILITY
SECOND FLOOR DUCTWORK PLAN

STATE OF OHIO R. C. WIER 24648 REGISTERED

EFD DWG NO 4189170
JOB ORDER NO SF5215
STA PROJ NO P-241
DES RAD DRWN RAB
PROJ MGR CH ARCH ENGR
EFD AVD EP
BR MGR DES OIR
APPROVED DATE
ACTIVITY - SATISFACTORY TO
APPROVED DATE 3/22/82
FOR EFD FOR COMMANDER NAVFAC

SIZE F | CODE IDENT NO 80091 | NAVFAC DRAWING NO 4189170
CONSTR CONTR NO N624-0-85-B-5215
SCALE 1/8"=1'-0" | SPEC 35-85-5215 | SHEET 71 OF 105

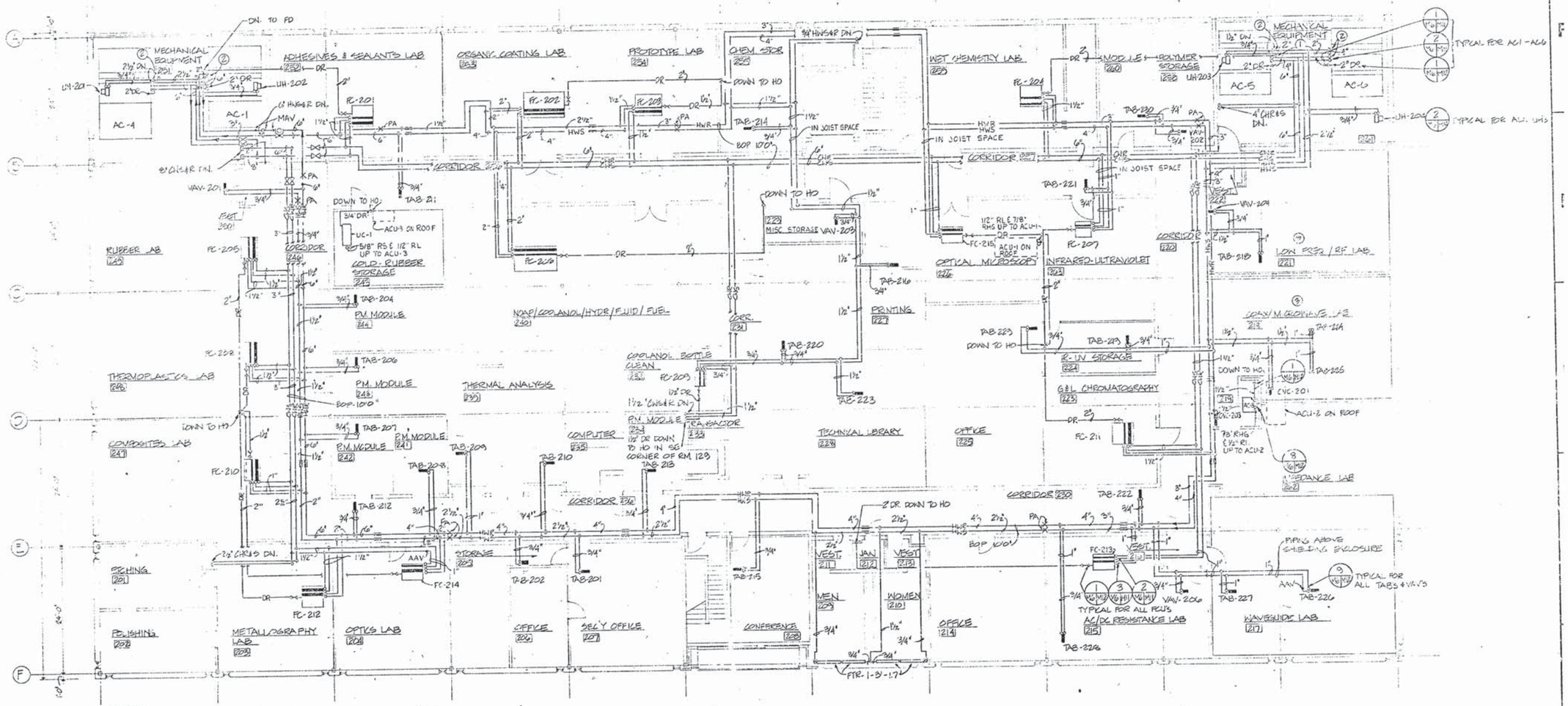

NOTES:

1. 2" DR. DOWN TO FLOOR DRAIN.
2. PROVIDE AAV AT CHS & HWS DROPS TO AC UNITS.
3. UNDER ALTERNATE BID ITEM PROVIDE DIELECTRIC CONNECTORS OUTSIDE SHIELDING IN LINE WITH WAVEGUIDE PIPE PENETRATION.

GRAPHIC SCALES

1/8"=1'-0" 0 5 10 20 40

M-6

A.M. KINNEY, INC.
CONSULTING ENGINEERS
CINCINNATI OHIO

DEPARTMENT OF THE NAVY — NAVAL FACILITIES ENGINEERING COMMAND
ATLANTIC DIVISION
NAVAL STATION — NORFOLK, VIRGINIA

NAVAL AIR REWORK FACILITY
NORFOLK, VIRGINIA
MATERIALS/STANDARDS LABORATORY FACILITY
SECOND FLOOR PIPING PLAN

STATE OF VIRGINIA — R. C. WIER 23646 — PROFESSIONAL ENGINEER

EFD DWG NO	283171
JOB ORDER NO	SF5215
STA PRO NO	P-241
DES	RAB
DRAWN	RAB
PROJ MGR	JKY
CH ARCHITECT	JES
EFD RVD	
DR MGR	
DES DIR	
APPROVED	DATE
ACTIVITY - SATISFACTORY TO	
APPROVED	DATE 3/27/89
FOR EFD FOR COMMANDER NAVFAC	

SIZE	FOOTPRINT NO	NAVFAC DRAWING NO
F	80091	4189171

CONTR NO N62470-85-B-5215
SCALE 1/8"=1'-0" SPEC 05-85-5215 SHEET 72 OF 105

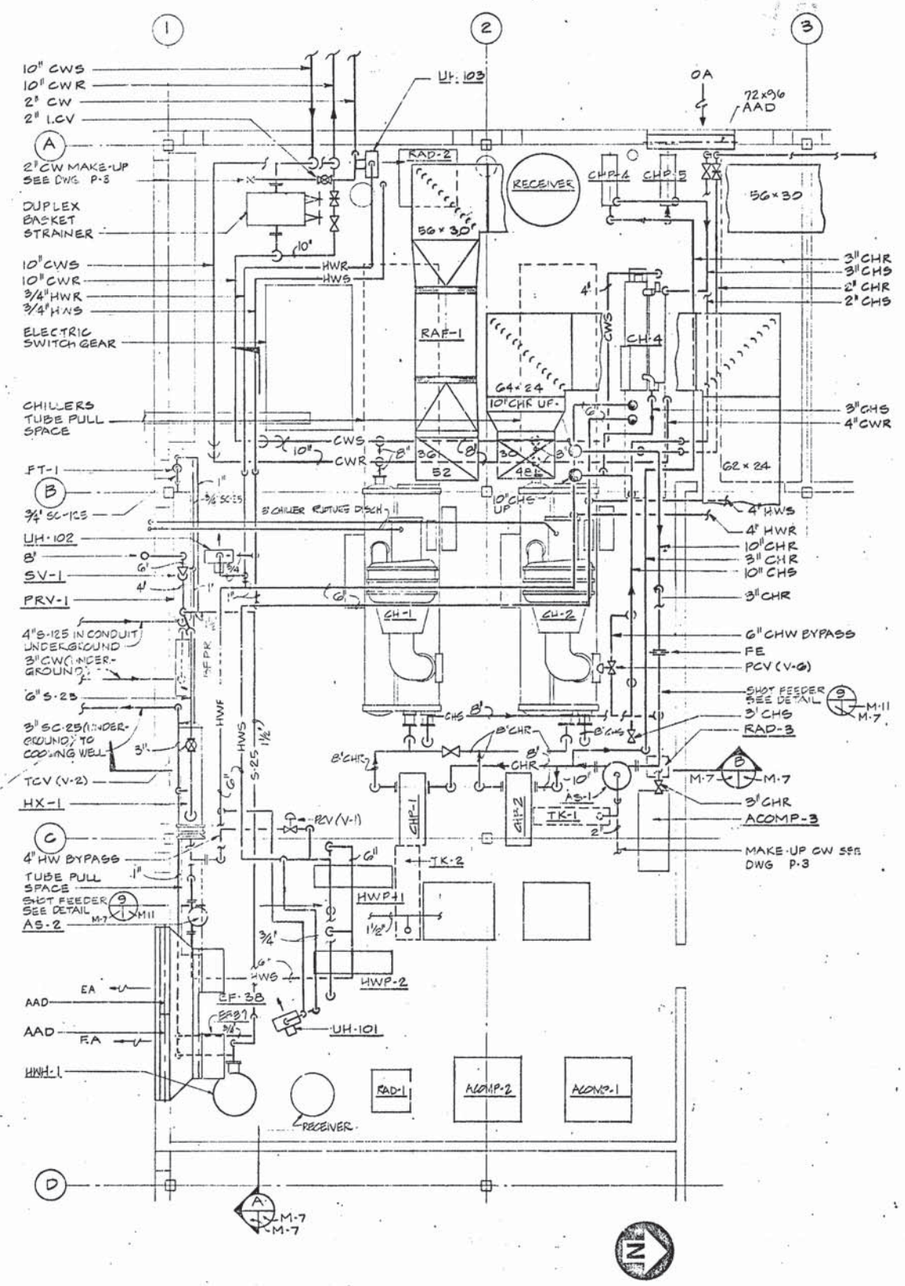

PART PLAN 1ST FLOOR

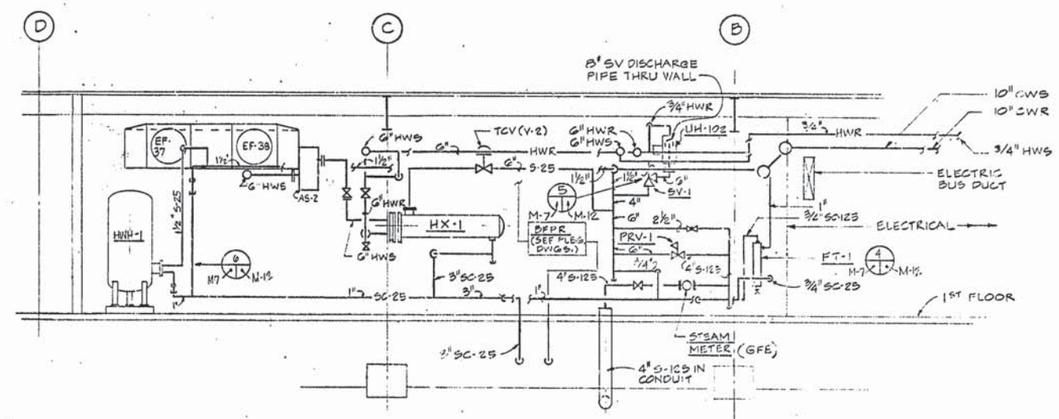

SECTION A M-7

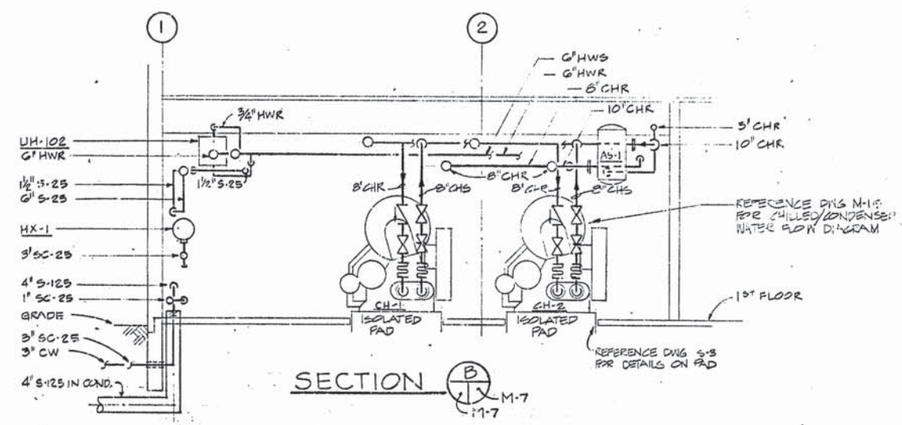

SECTION B M-7

REVISIONS			
SYM	DESCRIPTION	DATE	APPROVED

M-7

A.M. KINNEY, INC.
CONSULTING ENGINEERS
CINCINNATI, OHIO

DEPARTMENT OF THE NAVY — NAVAL FACILITIES ENGINEERING COMMAND
ATLANTIC DIVISION
NAVAL STATION — NORFOLK, VIRGINIA

EFD DWG. NO. 269172
JOB ORDER NO. 5F5215
STA. PROJ. NO. P-241
DES. REC — DRN. REC
PROJ. MGR. HILY — CH. ARCH. ENGR. REC
EFD RVD — FP
BR. MGR. — IFS DIR.
APPROVED — DATE
ACTIVITY - SATISFACTORY TO
APPROVED — DATE 3/27/89
FOR EFD FOR COMMANDER NAVFAC

R. C. WIER 21646

NAVAL AIR REWORK FACILITY
NORFOLK, VIRGINIA
MATERIALS/STANDARDS LABORATORY FACILITY
EQUIPMENT ROOM PLAN

SIZE F — CODE IDENT. NO. 80091 — NAVFAC DRAWING NO. 4189172
CONSTR. CONTR. NO. N62470-85-B-5215
SCALE 1/8"=1'-0" — SPEC 05-85-5215 — SHEET 73 OF 105

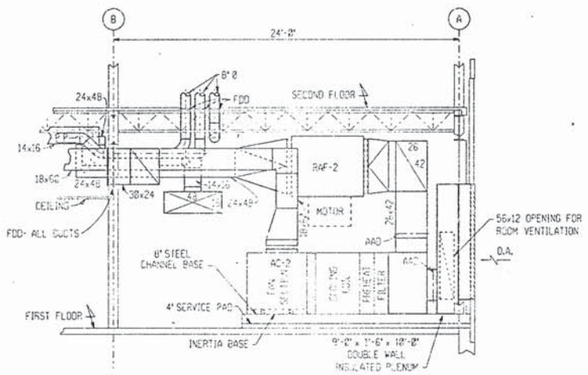

SECTION A
*AC-3,4 & 6 SIMILAR
SCALE: 1/4" = 1'-0"
M3 M8

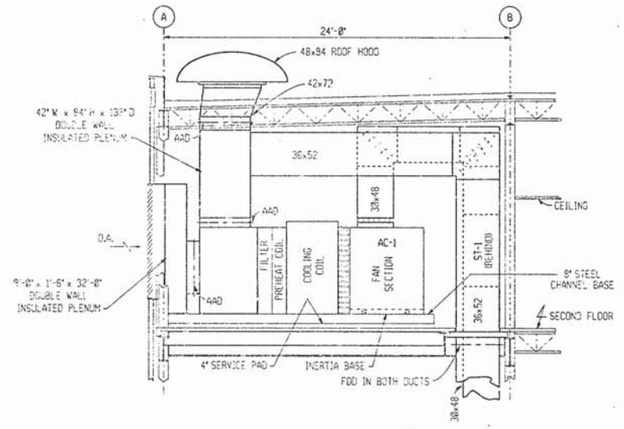

SECTION B
SCALE: 1/4" = 1'-0"
M5 M8

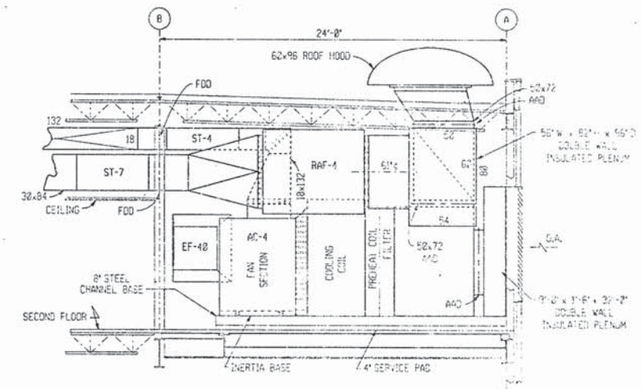

SECTION C
SCALE: 1/4" = 1'-0"
M5 M8

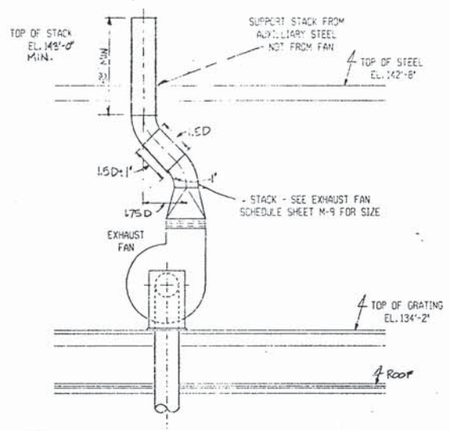

TYPICAL EXHAUST FAN ELEVATION
SCALE: NONE
M5 M8

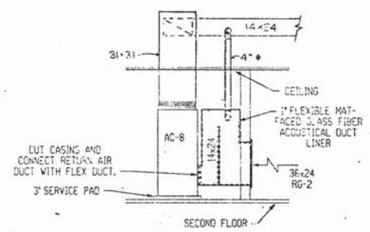

SECTION D
SCALE: 1/4" = 1'-0"
M5 M8

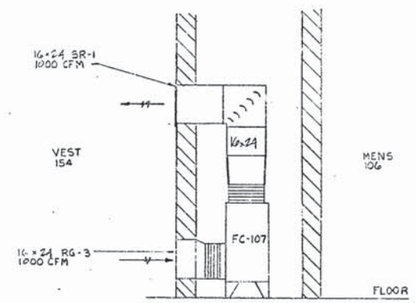

SECTION E
SCALE: 1/2" = 1'-0"
M3 M8

GRAPHIC SCALE:
1/4" = 1'-0"

M-8

A.M. KINNEY, INC.
CONSULTING ENGINEERS
CINCINNATI, OHIO

EFD DWG. NO. 859170
JOB CODE NO. SF5215
STA. PROJ. NO. P-241
DES. RAB DWN. RAA
PROJ. MGR. RT CH. ARCHITECTURES
EFD MGR. VKC P.M. RLW
BR. MGR. RB DES. DIR. RWZ
APPROVED DATE
ACTIVITY SATISFACTORY TO
APPROVED DATE 3/20/89
FOR EFD COMMANDER, FEDERAL

STATE OF OHIO
R. C. WIER
24646
REGISTERED
PROFESSIONAL ENGINEER

DEPARTMENT OF THE NAVY NAVAL FACILITIES ENGINEERING COMMAND
ATLANTIC DIVISION
NAVAL STATION NORFOLK, VIRGINIA

NAVAL AIR REWORK FACILITY
NORFOLK, VIRGINIA
MATERIALS/STANDARDS LABORATORY FACILITY
SECTIONS

SIZE	CODE IDENT. NO.	NAVFAC DRAWING NO.
F	80091	4189173

CONSTR. CONTR. NO. N62470-89-B-5215
SCALE: AS NOTED PROJ. 05-85-5215 SHEET 14 OF 105

AIR CONDITIONING UNIT SCHEDULE

UNIT NO.	AIR FLOW SUPPLY SCFM	AIR FLOW OUTDOOR SCFM	FAN TYPE	MAX. OUTLET VEL FPM	TOTAL STATIC PRESS. IN W.C.	VARIABLE INLET VANE	WHEEL SIZE (IN.)	CLASS	RPM	MOTOR BHP/MOTOR HP	MOTOR VOLTS/PH	③
AC-1	24,200	12,150	AIR FOIL	2,570	7.5	YES	30	III	1590	44/50	460/3	3
AC-2	13,970	1,435	AIR FOIL	2,225	7.5	YES	24.5	III	1850	25/30	460/3	3
AC-3	9750	975	BACKW'D INCLINED	1,680	7.5	YES	20	III	2370	20/25	460/3	2
AC-4	32,670	22,800	AIR FOIL	3,155	7.5	YES	33	III	1500	63/75	460/3	4
AC-5	15,250	9,455	AIR FOIL	2,430	7.5	YES	24.5	III	1880	/30	460/3	3
AC-6	17,060	9,375	AIR FOIL	2,380	7.5	YES	27	III	1750	35/40	460/3	3
AC-7	2200	0	AIR FOIL	---	0.3 ESP	NO	---	---	---	/1.0	460/3	1
AC-8	2000	0	AIR FOIL	---	0.3 ESP	NO	---	---	---	/1.0	460/3	1

UNIT NO.	COOLING COIL FACE AREA SQ FT	MAX. FACE VEL FPM	EAT db/wb °F	LAT db/wb °F	EWT °F	LWT °F	GPM	ROWS	FINS PER IN.	PRESS. LOSS WATER FT HD	PRESS. LOSS AIR IN. WC
AC-1	49.5	490	83.4/70	50/49	42	52	298.0	8	9	21.8	1.1
AC-2	30.6	460	76.8/63	52/50	42	52	97.0	6	8	21.6	0.5
AC-3	20.6	475	76.8/63	52/50	42	52	68.0	6	7	20.4	0.7
AC-4	63.0	520	87.3/73.8	50/49	42	52	500.0	10	7	40.8	1.3
AC-5	30.6	500	84.7/70.6	52/50	42	52	192.0	8	7	15.8	1.0
AC-6	40.5	425	84.8/70.4	52/50	42	52	217.0	8	7	15.4	0.9
AC-7	TOTAL-40,000 BTUH; SENSIBLE-38,000 BTUH				REFRIGERANT	DIRECT	---	---	---	---	
AC-8	TOTAL-40,000 BTUH; SENSIBLE-38,000 BTUH				REFRIGERANT	EXPAN.	---	---	---	---	

UNIT NO.	PRE-HEAT COIL FACE AREA SQ FT	FACE VEL FPM	EAT °F	LAT °F	EWT °F	LWT °F	GPM	④	ROWS	FINS PER IN.	PRESS. LOSS WATER FT HD	PRESS. LOSS AIR IN. WC
AC-1	49.5	490	46.5	66.5	160	130	36.0	HWP-3	1	7	1.4	0.11
AC-2	30.6	460	65.0	85.0	160	130	20.0	HWP-4	1	7	1.4	0.10
AC-3	20.6	475	65.0	85.0	160	130	14.0	HWP-5	1	7	1.2	0.11
AC-4	63.0	520	36.0	56.0	160	130	47.0	HWP-6	1	8	3.1	0.12
AC-5	30.6	500	43.0	63.0	160	130	22.0	HWP-7	1	7	1.9	0.11
AC-6	40.5	425	43.0	63.0	160	130	25.0	HWP-8	1	7	1.9	0.11
AC-7	ELECTRIC HEATING COIL-38,000 BTUH							---	---	---	---	---
AC-8	ELECTRIC HEATING COIL-38,000 BTUH							---	---	---	---	---

UNIT NO.	MAXIMUM SOUND POWER LEVEL REF 10^{-12} WATTS OCTAVE BAND HZ 63	125	250	500	1000	2000	4000	8000	REMARKS
AC-1	107	99	104	94	91	87	85	82	PROVIDE FAN INERTIA BASE
AC-2	107	99	100	92	90	86	83	80	PROVIDE FAN INERTIA BASE
AC-3	107	99	100	92	90	86	83	80	PROVIDE FAN INERTIA BASE
AC-4	108	100	106	96	92	88	86	83	PROVIDE FAN INERTIA BASE
AC-5	107	99	101	92	90	86	84	81	PROVIDE FAN INERTIA BASE
AC-6	107	99	102	93	91	87	84	81	PROVIDE FAN INERTIA BASE
AC-7									① ② ⑤ ⑥
AC-8									① ② ⑤ ⑥

① FOR ROOM DESIGN CONDITIONS SEE DRAWING NO. M-13.
② UNIT TO INCLUDE INFRARED HUMIDIFIER 11.0 lbs/hr, 4.8 KW
③ NEMA STARTER SIZE
④ RECIRCULATING PUMP NO.
⑤ MANUFACTURER SHALL INSTALL AC-7 AND AC-8 SYSTEMS
⑥ SYSTEM TO INCLUDE MATCHING AIR-COOLED CONDENSING UNIT 460 V 3φ

EXHAUST FAN SCHEDULE

MARK	ROOM SERVED	SCFM	T.S.P. " WC	MAX. OUTLET VELOCITY FPM	FAN TYPE	WHEEL SIZE	DRIVE	RPM	MOTOR HP	MOTOR VOLTS/PH	①	STACK DIA.-IN.	REMARKS
EF-1	138	3,000	1.5	1,565	CENTRIFUGAL UTILITY SET	18.25	BELT	1,335	1.5	460/3	1	14	
EF-2	249	440	0.5	1,100		7.5	BELT	1,179	0.25	115/1	MS	6	
EF-3	240	6,600	1.5	1,575		27.0	BELT	890	3.0	460/3	1	22	
EF-4	252	3,000	1.5	1,565		18.25	BELT	1,335	1.5	460/3	1	14	
EF-5	252	440	0.5	1,100		7.5	BELT	1,179	0.25	115/1	MS	6	
EF-6	253	235	0.5	590		7.5	BELT	1,087	0.17	115/1	MS	4	
EF-7	254	3,000	1.5	1,565		18.25	BELT	1,335	1.5	460/3	1	14	
EF-8	254	1,375	1.5	1,600		12.25	BELT	2,216	0.75	460/3	1	10	
EF-9	240	725	0.5	845		12.25	BELT	1,762	0.33	115/1	MS	7	
EF-10	253	7,000	1.5	1,355		30.0	BELT	754	3.0	460/3	1	22	
EF-11	255	445	1.0	1,115		7.5	BELT	1,180	0.25	115/1	MS	6	
EF-12	227	300	0.5	750		7.5	BELT	1,098	0.17	115/1	MS	6	
EF-13	259	825	0.5	960		12.25	BELT	1,809	0.33	115/1	MS	8	
EF-14	259	1,375	1.5	1,600		12.25	BELT	2,216	0.75	460/3	1	10	
EF-15	263	1,550	1.5	1,205		[illegible]	BELT	1,525	0.5	460/3	1	10	
EF-16	139	1,375	1.5	1,980	[illegible] STACK & FAN		DIRECT	1,750	3.0	460/3	1	16	FOR PERCHLORIC FUME HOOD
EF-17	249	1,500	1.5	1,165		15.0	BELT	1,513	0.75	460/3	1	10	
EF-18	248	1,500	1.5	1,165		15.0	BELT	1,513	0.75	460/3	1	10	
EF-19	247	1,500	1.5	1,165		15.0	BELT	1,513	0.75	460/3	1	10	
EF-20	247	300	0.5	750		7.5	BELT	1,096	0.17	115/1	MS	6	
EF-21	201	750	0.5	875		12.25	BELT	1,773	0.33	115/1	MS	8	
EF-22	101	1,375	1.5	1,600		12.25	BELT	2,216	0.75	460/3	1	10	
EF-23	232	375	1.5	940		7.5	BELT	1,131	0.17	115/1	MS	6	
EF-24	136	150	0.5	375		7.5	BELT	1,087	0.17	115/1	MS	4	
EF-25	104	150	0.5	375		7.5	BELT	1,087	0.17	115/1	MS	4	
EF-26	240	375	1.5	940		7.5	BELT	1,131	0.17	115/1	MS	6	
EF-27	215	1,375	1.5	1,600		12.25	BELT	2,216	0.75	460/3	1	10	
EF-28	TR's	1,520	1.5	1,160		15.0	BELT	1,508	0.75	460/3	1	10	
EF-29	215	270	0.5	675		7.5	BELT	1,093	0.17	115/1	MS	6	
EF-30	115	525	0.5	1,010		9.0	BELT	869	0.17	115/1	MS	6	
EF-31	223	150	0.5	375		7.5	BELT	1,087	0.17	115/1	MS	4	
EF-32	223	1,375	1.5	1,600		12.25	BELT	2,216	0.75	460/3	1	10	
EF-33	223	1,500	1.5	1,165		15.0	BELT	1,513	0.75	460/3	1	10	
EF-34	201	1,375	1.5	1,960	[illegible] STACK & FAN		DIRECT	1,750	3.0	460/3	1	16	FOR PERCHLORIC FUME HOOD
EF-35	259	1,375	1.5	1,980	[illegible] STACK & FAN		DIRECT	1,750	3.0	460/3	1	16	FOR PERCHLORIC FUME HOOD
EF-36	148	5,200	0.375	---	PROPELLER	30.0	BELT	860	0.75	460/3	1	--	
EF-37	147	7,255	0.375	---	PROPELLER	30.0	BELT	945	1.0	460/3	1	--	
EF-38	147	7,255	0.375	---	PROPELLER	30.0	BELT	945	1.0	460/3	1	--	
EF-39	153	5,350	0.375	---	PROPELLER	30.0	BELT	860	0.75	460/3	1	--	
EF-40	251	6,175	0.375	---	PROPELLER	30.0	BELT	860	0.75	460/3	1	--	
EF-41	261	5,115	0.375	---	PROPELLER	30.0	BELT	860	0.75	460/3	1	--	
EF-42	119	150	0.5	375	CENTRIFUGAL UTILITY SET	7.5	BELT	1,067	0.17	115/1	MS	4	
EF-43	112	500	1.0	375		9.0	BELT	1,200	0.25	115/1	MS	8	
EF-44	139	300	0.5	750		7.5	BELT	1,100	0.17	115/1	MS	6	
EF-45	103	600	0.5	1,155		9.0	BELT	915	0.17	115/1	MS	8	
EF-46	117	150	0.5	375		7.5	BELT	1,097	0.17	115/1	MS	4	
EF-47	116	150	0.5	375		7.5	BELT	1,087	0.17	115/1	MS	4	
EF-48	254	270	0.5	675		7.5	BELT	1,087	0.17	115/1	MS	6	
EF-49	254	300	0.5	500		7.5	BELT	1,087	0.17	115/1	MS	6	
EF-50	126	150	0.5	375	CENTRIFUGAL UTILITY SET	7.5	BELT	1,087	0.17	115/1	MS	4	FAN RUNS CONTINUOUSLY, SPARK RESISTANT BLADES, EXPLOSION PROOF MOTOR.

① NEMA STARTER SIZE

FAN COIL SCHEDULE

UNIT NO.	ROOM SERVED	FAN CFM	E.S.P. " WC	RPM	DRIVE	MOTOR HP	VOLTS/PH	④	COOLING COIL ROWS	MBH	EAT °F	LAT °F	GPM ②	AIR P.D. " WC	WATER P.D. FT HD	HEATING COIL ROWS	MBH	EAT °F	LAT °F	GPM ③	AIR P.D. " WC	WATER P.D. FT HD	REMARKS
FC-101	148	4,800	1.5	700	BELT	3.0	460/3	1	4	105.6	75	55	21.1	0.25	1.0	2	260.1	50	100	17.4	0.25	0.5	
FC-102	NOT USED																						
FC-103	138	2,700	1.0	680	BELT	1.0	460/3	1	4	59.4	75	55	11.9	0.35	2.0	2	87.9	50	90	5.9	0.11	16.0	
FC-104	101,102	3,075	1.0	680	BELT	1.0	460/3	1	4	67.7	75	55	13.5		2.5	2	166.8	50	100	11.1	0.11	25.0	⑤
FC-105	139,143	1,530	1.0	560	BELT	0.5	460/3	1	4	33.7	75	55	6.7		5.5	2	49.8	50	80	3.3	0.11	3.5	
FC-106	131	200	1.0	---	DIRECT	80W ①	115/1	MS	4	4.4	75	55	0.9		1.75	---	---	---	---	---	---	---	
FC-107	154	1,000	0.5	1100	DIRECT	460W	115/1	MS	3	25.0	75	50	5.0		8.5	2	32.6	70	100	3.0	0.15	2.2	
FC-108	135	2,700	4.0	1725	BELT	5.0	460/3	1	4	73.4	75	52	14.7		0.75	1	87.5	50	80	5.8	0.20	0.3	
FC-109	123	2,400	4.0	1745	BELT	3.0	460/3	1	4	65.3	75	52	13.1		0.75	1	77.8	50	80	5.2	0.20	0.3	
FC-110	122	2,700	4.0	1725	BELT	5.0	460/3	1	4	73.4	75	52	14.7		0.75	1	87.5	50	80	5.9	0.20	0.3	
FC-111	120	1,300	4.0	2810	BELT	3.0	460/3	1	5	35.4	75	52	7.1	1.0	1.0	1	42.1	50	80	2.8	0.20	0.2	
FC-112	104	4,290	2.0	935	BELT	3.0	460/3	1	4	94.4	75	55	18.9	0.35	0.85	2	231.7	50	100	15.4	0.20	0.5	
FC-201	252	3,240	1.0	680	BELT	1.0	460/3	1	4	71.3	75	55	14.0		2.8	2	175.8	50	100	11.7	0.11	25.0	⑤
FC-202	253	7,520	1.5	615	BELT	5.0	460/3	1	4	163.2	75	55	32.6		1.25	2	408.0	50	100	27.2	0.20	0.7	
FC-203	254	4,176	1.0	615	BELT	1.5	460/3	1	4	91.9	75	55	18.4		5.5	2	226.5	50	100	15.1	0.11	25.0	⑤
FC-204	259	3,150	1.0	680	BELT	1.0	460/3	1	4	69.3	75	55	13.9		2.8	2	170.9	50	100	11.4	0.11	25.0	⑤
FC-205	249	1,740	1.0	980	BELT	0.75	460/3	1	4	38.3	75	55	7.7		7.0	2	92.8	50	100	6.2	0.11	10.5	
FC-206	240	7,400	1.5	725	BELT	5.0	460/3	1	4	162.8	75	55	32.6		1.25	2	401.5	50	100	26.9	0.20	0.7	
FC-207	263	1,400	1.0	955	BELT	0.5	460/3	1	4	30.4	75	55	6.1		4.0	2	71.0	50	100	5.1	0.10	8.5	
FC-208	246	3,125	1.0	680	BELT	1.0	460/3	1	4	68.8	75	55	13.8		2.8	2	169.5	50	100	11.3	0.11	25.0	
FC-209	232	460	1.0	---	DIRECT	145W ①	115/1	MS	4	10.1	75	55	2.0		13.0	2	25.0	50	100	1.7	0.15	3.0	
FC-210	247	1,600	1.0	970	BELT	0.75	460/3	1	4	35.2	75	55	7.0		5.5	2	86.8	50	100	5.8	0.11	8.5	
FC-211	223	3,000	1.0	580	BELT	1.0	460/3	1	4	66.0	75	55	13.2		2.5	2	162.8	50	100	10.9	0.11	25.0	⑤
FC-212	201,2,3	3,120	2.0	1085	BELT	3.0	460/3	1	4	68.6	75	55	13.7		2.8	2	169.3	50	100	11.3	0.11	25.0	⑤
FC-213	215	1,440	1.0	955	BELT	0.5	460/3	1	4	31.7	75	55	6.3		4.0	2	78.1	50	100	5.2	0.10	8.5	
FC-214	204	1,585	1.5	1175	BELT	0.75	460/3	1	4	34.2	75	55	6.8		5.5	2	85.4	50	100	5.7	0.11	8.5	
FC-215	226	1,500	1.5	1170	BELT	0.75	460/3	1	4	32.4	75	55	6.5		4.8	2	80.9	50	100	5.4	0.11	8.5	
FC-113&114	132&142	700	2.0	1620	BELT	0.75	460/3	1	4	15.4	75	55	3.1	0.35	0.75	1	22.7	50	80	1.5	0.10	1.3	

① MOTOR TO BE SPLIT CAPACITOR TYPE WITH INTEGRAL THERMAL OVERLOAD PROTECTION.
② BASED ON 42° EWT, 10° RISE.
③ BASED ON 160° EWT, 130° LWT
④ NEMA STARTER SIZE
⑤ HEATING COIL WATER PRESSURE DROP MAY DETERMINE UNIT SIZE.

SOUND ATTENUATORS

MARK NO.	SIZE (INCHES) L.	W.	H.	SCFM	VELOCITY FPM	MAXIMUM AIR ΔP IN. W.G.	DYNAMIC INSERTION LOSS 63	125	250	500	1000	2000	4000	8000	REMARKS
ST-1	60	48	30	24,200	+ 2500	0.32	6	7	13	21	29	39	20	14	SERVES AC-1
ST-2	60	60	18	13,970	+ 2000	0.23	6	7	13	21	29	39	20	14	SERVES AC-2
ST-3	60	48	18	9,750	+ 1500	0.15	6	7	13	21	29	39	20	14	SERVES AC-3
ST-4	60	132	18	32,670	+ 2000	0.22	6	7	13	21	29	39	20	14	SERVES AC-4
ST-5	60	72	18	15,250	+ 1500	0.16	6	7	13	21	29	39	20	14	SERVES AC-5
ST-6	60	36	30	17,060	+ 2500	0.28	6	7	13	21	29	39	20	14	SERVES AC-6
ST-7	60	60	30	24,200	- 2500	0.22	7	8	14	23	31	33	17	11	SERVES RAF-1
ST-8	60	46	24	13,970	- 2000	0.17	7	8	14	23	31	33	17	11	SERVES RAF-2
ST-9	60	24	30	9,750	- 1500	0.22	7	8	14	23	31	33	17	11	SERVES RAF-3
ST-10	60	52	30	32,670	- 2000	0.20	7	8	14	23	31	33	17	11	SERVES RAF-4
ST-11	60	52	24	15,250	- 1500	0.21	7	8	14	23	31	33	17	11	SERVES RAF-5
ST-12	60	52	24	17,060	- 2500	0.17	7	8	14	23	31	33	17	11	SERVES RAF-6
ST-108	60	24	12	2,700	+ 1500	0.10	6	7	13	21	29	39	20	14	SERVES FC-108
ST-109	60	24	12	2,400	+ 1000	0.09	6	7	13	21	29	39	20	14	SERVES FC-109
ST-110	60	24	12	2,700	+ 1500	0.10	6	7	13	21	29	39	20	14	SERVES FC-110
ST-111	60	24	6	1,300	+ 1500	0.10	6	7	13	21	29	39	20	14	SERVES FC-111
ST-112	60	30	18	4,290	+ 1150	0.10	6	7	13	21	29	39	20	14	SERVES FC-112
ST-207	60	12	12	1,400	+ 1500	0.10	6	7	13	21	29	39	20	14	SERVES FC-207
ST-213	60	12	12	1,440	+ 1500	0.11	6	7	13	21	29	39	20	14	SERVES FC-213
ST-214	60	12	12	1,585	+ 1500	0.14	6	7	13	21	29	39	20	14	SERVES FC-214
ST-215	60	12	12	1,500	+ 1500	0.12	6	7	13	21	29	39	20	14	SERVES FC-215

UNIT HEATER SCHEDULE ①

NO.	LOCATION	OUTPUT MBH	WATER GPM	WATER MAX. P.D. FT HD	AIR SCFM	AIR LAT °F	MOTOR HP	RPM	VOLTS/PH	NEMA STARTER SIZE	REMARKS
UH-101	147	52.5	3		1340	106	1/8	1625	115/1	MS	
UH-102	147	52.5	3		1340	106	1/8	1625	115/1	MS	
UH-103	147	52.5	3		1340	106	1/8	1625	115/1	MS	
UH-104	153	38	2		1120	101	1/12	1550	115/1	MS	
UH-105	153	38	2		1120	101	1/12	1550	115/1	MS	
UH-201	251	26	2		730	103	1/12	1550	115/1	MS	
UH-202	251	26	2		730	103	1/12	1550	115/1	MS	
UH-203	261	26	2		730	103	1/12	1550	115/1	MS	
UH-204	261	26	2		730	103	1/12	1550	115/1	MS	
CUH-101	STAIR #2	25	1.7		800	100	1/7	1360	115/1	MS	

① BASED ON 70° EAT, 160° EWT, 130° LWT, HORIZONTAL DISCHARGE

AIR SEPARATOR SCHEDULE

NO.	SYSTEM	MINIMUM CAPACITY (GPM)	PIPE SIZE (INCHES)	REMARKS
AS-1	CHILLED WATER	1515	8"	
AS-2	HEATING WATER	460	5"	

EXPANSION TANK SCHEDULE

NO.	SYSTEM	MINIMUM CAPACITY (GALLONS)	REMARKS
TK-1	CHILLED WATER	80	
TK-2	HEATING WATER	200	

FILTER SCHEDULE

MARK	SERVES	TYPE	SIZE	PERCENT EFFICIENCY ASHRAE 52-76	PRESSURE LOSS AT MAX CFM IN W.C. CLEAN	DIRTY	REMARKS
F-1	FAN COIL SYSTEMS	①	48x24	99.97	1.0	2.0	③
F-2	FAN COIL SYSTEMS	①	24x24	99.97	1.0	2.0	③
TF-1	CEILING GRID	②	24x24	95. DOP	0.2	1.0	④
F-3	FAN COILS	②	24x24	95. DOP	0.2	1.0	

① HEPA - WITH 2" PREFILTER
② 95% DOP FILTER
③ HOUSING SHALL ALSO BE SUITABLE FOR USE WITH TYPE ② FILTER.
④ HOUSING SHALL BE SUITABLE FOR 24"x24" T-BAR CEILING SYSTEM.

WATER CHILLERS CH-1, CH-2

HERMETIC CENTRIFUGAL, 320 TONS, R-11;

EVAPORATOR SECTION - .0005 FOULING FACTOR, 52° F ENTERING WATER, 42° F LEAVING WATER, 770 GPM, 27 FT. HEAD MAXIMUM WATER PRESSURE DROP;

CONDENSER SECTION - .0005 FOULING FACTOR, 87° F ENTERING WATER, 97° F LEAVING WATER, 960 GPM, 25 FT. HEAD MAXIMUM WATER PRESSURE DROP; FACTORY MOUNTED STAR DELTA CLOSED TRANSITION STARTER, 460 VOLTS 3 PHASE 60 HZ, 226 MAXIMUM KW INPUT.

WATER CHILLER CH-3 - NOT USED

WATER CHILLER CH-4

RECIPROCATING, 52 TONS, R-22;

EVAPORATOR SECTION - .0005 FOULING FACTOR, 52° F ENTERING WATER, 42° F LEAVING WATER, 120 GPM, 15 FT. HEAD MAXIMUM PRESSURE DROP;

CONDENSER SECTION - .0005 FOULING FACTOR, 87° F ENTERING WATER, 97° F LEAVING WATER, 153 GPM, 20 FT. HEAD MAXIMUM WATER PRESSURE DROP;

2 COMPRESSORS, 6 STEPS OF CAPACITY CONTROL, FACTORY MOUNTED REDUCED VOLTAGE STARTER, 460 VOLTS 3 PHASE 60 HZ, 48 MAXIMUM KW INPUT.

COOLING TOWERS CT-1, CT-2

1040 GPM, 97° F ENTERING WATER TEMPERATURE, 87° F LEAVING WATER TEMPERATURE, 79° F WET BULB TEMPERATURE, 1 CELL, 1 FAN, 20 HP 460 VOLTS, 3 PHASE, 60 HZ, NEMA STARTER SIZE 2. VARIABLE FREQUENCY CONTROL. VARIABLE SPEED REVERSING FANS

HEATING WATER CONVERTER HX-1

125 PSIG RATING, 10 PSIG STEAM, 460 GPM WATER, 170° F ENTERING WATER, 200° F LEAVING WATER, 2 FT. MAXIMUM WATER PRESSURE DROP, .001 FOULING FACTOR.

FINNED TUBE RADIATION FTR-1

3/4 INCH COPPER TUBE, (40) 3 1/4" X 3 1/4" FINS PER FOOT, 570 BTU PER LINEAR FOOT, 160° F INLET WATER, 130° F LEAVING WATER.

STEAM PRESSURE REDUCING VALVE PRV-1

7500 lbs/hr, 90 PSIG TO 15 PSIG

CONDENSING UNIT FOR COLD ROOM (ACU-3) NET CAPACITY 12,000 BTU/HR, 95F OUTDOOR AIR TEMP, 45F COLD ROOM TEMP, 1½ HP, 460-3-60 NEMA STARTER SIZE 1

UNIT COOLER (UC)
12,000 BTU/HR, 2200CFM, 20FT THROW, 1 18" FAN, 1/6 HP, 115-1-60 NEMA STARTER SIZE 4

M-9

A.M. KINNEY, INC.
CONSULTING ENGINEERS
CINCINNATI, OHIO

STATE OF OHIO R. C. WIER 24645 REGISTERED PROFESSIONAL ENGINEER

EFD DWG. NO. 289174	
JOB ORDER NO. 5F5215	
STA. PROJ. NO. P-241	
DES. RAB	DRAW. RAA
PROJ. MGR. JHKY	CH. ARCH/ENT. AJES
EFDIRVD. HWC	F.P. [illegible]
BR. MGR. [illegible]	DES. DIR. [illegible]
APPROVED	DATE
ACTIVITY-SATISFACTORY TO	
APPROVED [signature]	DATE 3/27/89
FOR EFD COMMANDER NAVFAC	

DEPARTMENT OF THE NAVY NAVAL FACILITIES ENGINEERING COMMAND
ATLANTIC DIVISION
NAVAL STATION NORFOLK, VIRGINIA

NAVAL AIR REWORK FACILITY
NORFOLK, VIRGINIA
MATERIALS/STANDARDS LABORATORY FACILITY
SCHEDULES I

SIZE	CODE IDENT. NO.	NAVFAC DRAWING NO.
F	80091	4189174
		CONSTR. CONTR. NO. N62470-85-B-5215
SCALE NONE	SPEC. 05-85-5215	SHEET 75 OF 105

TERMINAL AIR BLENDER UNIT SCHEDULE - TAB/VAV / HEATING COIL SCHEDULE ①

UNIT NO.	ROOM SERVED	FAN CAPACITY CONSTANT FLOW CFM	FAN CAPACITY E.S.P. "WC	FAN HP	PRIMARY AIR CFM MINIMUM	PRIMARY AIR CFM MAXIMUM	INLET SIZE	NOM. SIZE	ROWS	CAP. MBH	EAT °F	LAT °F	AIR P.D. "WC	GPM	WATER P.D. FT HD	2-WAY CONTROL VALVE (V-1) C_v
TAB-101	NOT USED	---	---	---	---	---	---	---	---	---	---	---	---	---	---	---
TAB-102	↓	---	---	---	---	---	---	---	---	---	---	---	---	---	---	---
TAB-103	↓	---	---	---	---	---	---	---	---	---	---	---	---	---	---	---
TAB-104	103	1090	0.25	0.33	350	1090	10	24x15	2	59.1	50	100	0.25	3.9	3.0	1.8
TAB-105	146	1530	0.25	0.75	510	1530	12	24x15	2	83.0	50	100	0.30	5.5	6.3	2.3
TAB-106	NOT USED	---	---	---	---	---	---	---	---	---	---	---	---	---	---	---
TAB-107	136	1680	0.25	0.75	560	1680	12	30x18	1	54.7	50	80	0.30	3.6	1.4	1.7
TAB-108	NOT USED	---	---	---	---	---	---	---	---	---	---	---	---	---	---	---
TAB-109	140	530	0.25	0.10	180	530	8	18x12	1	17.3	50	80	0.10	1.2	0.2	.6
TAB-110	149	600	0.25	0.25	[illegible]	600	8	18x12	2	32.6	50	100	0.15	2.2	1.1	1.1
TAB-111	132	420	0.25	0.10	150	420	6	18x12	1	13.8	50	80	0.10	0.9	0.1	.5
TAB-112	145	425	0.25	0.10	150	425	6	18x12	1	13.8	50	80	0.10	0.9	0.1	.5
TAB-113	117	1930	0.25	0.75	500	1930	12	30x18	2	100.3	50	100	0.50	7.1	9.4	3.2
TAB-114	115	1620	0.25	0.75	600	1620	12	30x18	2	97.3	50	100	0.35	5.8	7.3	2.6
TAB-115	115	1620	0.25	0.75	600	1620	12	30x18	2	97.3	50	100	0.35	5.8	7.3	2.6
TAB-116	115	1620	0.25	0.75	600	1620	12	30x18	2	97.3	50	100	0.35	5.6	7.3	2.6
TAB-117	113	525	0.25	0.10	180	525	6	18x12	2	28.5	50	100	0.15	1.9	0.7	.9
TAB-118	NOT USED	---	---	---	---	---	---	---	---	---	---	---	---	---	---	---
TAB-119	NOT USED	---	---	---	---	---	---	---	---	---	---	---	---	---	---	---
TAB-120	NOT USED	---	---	---	---	---	---	---	---	---	---	---	---	---	---	---
TAB-121	125	240	0.25	0.10	120	240	6	18x12	1	7.8	50	80	0.10	0.5	0.1	.24
TAB-122	151	260	0.25	0.10	130	260	6	18x12	2	14.1	50	100	↓	0.9	0.3	.5
TAB-123	156	345	0.25	0.10	115	345	6	18x12	1	11.2	50	80	↓	0.8	0.1	.4
TAB-124	134	480	0.25	0.10	160	480	8	18x12	1	15.8	50	80	↓	1.0	0.1	.5
TAB-125	155	475	0.25	0.10	160	475	8	18x12	1	15.5	50	80	↓	[illegible]	0.1	.5
TAB-126	152	710	0.25	0.25	350	710	8	18x12	2	44.5	50	100	0.20	2.6	1.1	1.2
TAB-127	116	1100	0.25	0.33	400	1100	10	24x15	2	59.3	50	100	0.25	4.0	3.0	1.8
TAB-128	116	1000	0.25	0.33	400	1000	10	24x15	2	54.0	50	100	0.25	3.6	2.4	1.61
TAB-129	112	1465	0.25	0.5	500	1465	12	24x15	2	80.6	50	100	0.30	5.4	5.3	2.3
TAB-130	112	1465	0.25	0.5	500	1465	12	24x15	2	80.6	50	100	0.30	5.4	5.3	2.3
TAB-131	NOT USED	---	---	---	---	---	---	---	---	---	---	---	---	---	---	---
TAB-132	NOT USED	---	---	---	---	---	---	---	---	---	---	---	---	---	---	---
TAB-133	NOT USED	---	---	---	---	---	---	---	---	---	---	---	---	---	---	---
TAB-134	124	480	0.25	0.10	160	480	8	18x12	1	15.6	50	80	0.10	1.0	0.10	.5
TAB-201	207	500	0.25	0.16	250	500	8	18x12	2	27.1	50	100	0.15	1.8	0.7	.9
TAB-202	206	250	0.25	0.16	120	250	6	18x12	2	13.6	50	100	0.10	0.9	0.2	.5
TAB-203	NOT USED	---	---	---	---	---	---	---	---	---	---	---	---	---	---	---
TAB-204	244	390	0.25	0.16	130	390	6	18x12	2	21.2	50	100	0.10	1.4	0.2	.7
TAB-205	NOT USED	---	---	---	---	---	---	---	---	---	---	---	---	---	---	---
TAB-206	243	390	0.25	0.16	130	390	6	18x12	2	21.2	50	100	0.10	1.4	0.2	.7
TAB-207	242	260	0.25	0.16	130	260	6	18x12	2	14.1	50	100	0.10	0.9	0.2	.5
TAB-208	241	260	0.25	0.16	130	260	6	18x12	2	14.1	50	100	0.10	0.9	0.2	.5
TAB-209	239	1228	0.25	0.5	410	1228	10	24x15	2	66.6	50	100	0.25	4.4	3.7	2.1
TAB-210	235	530	0.25	0.16	150	530	8	18x12	2	28.8	50	100	0.15	1.9	0.3	.9
TAB-211	254	500	0.25	0.10	175	500	8	18x12	2	27.1	50	100	0.15	1.8	0.3	.9
TAB-212	236	500	0.25	0.10	175	500	8	18x12	2	27.1	50	100	0.15	1.8	0.3	.9
TAB-213	234	260	0.25	0.10	130	260	6	18x12	2	14.1	50	100	0.10	0.9	0.2	.5
TAB-214	255	444	0.25	0.10	200	444	8	18x12	2	24.1	50	100	0.15	1.6	0.5	.8
TAB-215	206	1095	0.25	0.33	350	1095	10	24x15	2	59.4	50	100	0.25	4.0	3.0	3.9
TAB-216	227	530	0.25	0.10	180	530	8	18x12	2	28.8	50	100	0.15	1.9	0.7	.9
TAB-217	NOT USED	---	---	---	---	---	---	---	---	---	---	---	---	---	---	---
TAB-218	271	2072	0.25	0.75	700	2072	12	30x18	2	112.4	50	100	0.50	7.5	10.4	3.3
TAB-219	224	400	0.25	0.16	130	400	6	18x12	2	21.7	50	100	0.10	1.4	0.5	.7
TAB-220	231	380	0.25	0.16	125	380	6	18x12	2	20.6	50	100	0.10	1.4	0.5	.7
TAB-221	257	690	0.25	0.25	230	690	8	18x12	2	37.4	50	100	0.20	2.5	1.1	1.2
TAB-222	230	690	0.25	0.25	230	690	8	18x12	2	37.4	50	100	0.20	2.5	1.1	1.2
TAB-223	228	1220	0.25	0.5	410	1220	10	24x15	2	66.2	50	100	0.25	4.4	3.7	2.1
TAB-224	218	1270	0.25	0.5	420	1270	10	24x15	2	68.9	50	100	0.25	4.6	3.7	2.1
TAB-225	218	1270	0.25	0.5	420	1270	10	24x15	2	68.9	50	100	0.25	4.6	3.7	2.1
TAB-226	217	1570	0.25	0.75	525	1570	12	24x15	2	85.2	50	100	0.30	5.7	6.7	2.4
TAB-227	217	1570	0.25	0.75	525	1570	12	24x15	2	85.2	50	100	0.30	5.7	6.7	2.4
TAB-228	214	636	0.25	0.25	210	636	8	18x12	2	34.5	50	100	0.20	2.3	0.9	1.1
TAB-229	225	768	0.25	0.25	260	768	8	18x12	2	41.7	50	100	0.20	2.8	1.3	1.4
TAB-230	260	670	0.25	0.25	225	670	8	18x12	2	36.3	50	100	0.20	2.4	1.0	1.2
VAV-101	130	140	0.20	---	50	140	4	12x8	1	1.6	50	80	0.25	0.1	0.10	.04
VAV-102	105	140	0.20	---	70	140	4	12x8	1	2.3	50	80	0.25	0.2	0.10	.07
VAV-103	NOT USED	---	---	---	---	---	---	---	---	---	---	---	---	---	---	---
VAV-104	NOT USED	---	---	---	---	---	---	---	---	---	---	---	---	---	---	---
VAV-201	250	75	0.20	---	40	75	4	12x8	2	2.1	50	100	0.10	0.2	0.10	.14
VAV-202	258	145	0.20	---	70	145	4	12x8	2	3.8	50	100	0.25	0.3	↓	.11
VAV-203	229	100	0.20	---	50	100	4	12x8	2	2.7	50	100	0.20	0.2	↓	.20
VAV-204	222	75	0.20	---	40	75	4	12x8	2	2.1	50	100	0.10	0.2	↓	.14
VAV-205	NOT USED	---	---	---	---	---	---	---	---	---	---	---	---	---	---	---
VAV-206	216	75	0.20	---	40	75	4	12x8	2	2.1	50	100	0.10	0.2	0.10	.14
CVC-101	135	270	0.20	---	270	270	5	---	---	---	---	---	---	---	---	---
CVC-102	123	240	0.20	---	240	240	5	---	---	---	---	---	---	---	---	---
CVC-103	122	270	0.20	---	270	270	5	---	---	---	---	---	---	---	---	---
CVC-104	120	130	0.20	---	130	130	4	---	---	---	---	---	---	---	---	---
CVC-105	157	150	0.20	---	150	150	4	12x8	1	4.9	50	80	0.25	0.3	0.10	.15
CVC-106	133	75	0.20	---	75	75	4	12x8	1	2.4	50	80	0.10	0.2	↓	.08
CVC-107	128	75	0.20	---	75	75	4	12x8	1	2.4	50	80	↓	0.2	↓	.08
CVC-108	121	75	0.20	---	75	75	4	12x8	1	2.4	50	80	↓	0.2	↓	.08
CVC-109	119	25	0.20	---	25	25	4	12x8	1	0.8	50	80	↓	0.1	↓	.02
CVC-201	219	75	0.20	---	75	75	4	12x8	2	4.1	50	100	0.10	0.3	0.10	.12
CVC-202	245	25	0.20	---	25	25	4	---	---	---	---	---	---	---	---	---
CVC-203	262	25	0.20	---	25	25	4	12x8	1	1.4	50	100	0.10	0.1	0.10	.04

① BASED ON 160° EWT, 130° LWT

PUMP SCHEDULE

EQUIP. NO.	SERVICE	TYPE	CAPACITY (GPM)	HEAD (FT WATER)	MOTOR HP	MOTOR RPM	MOTOR VOLTS/PH	②	MINIMUM PUMP EFFICIENCY	REMARKS
CHP-1	CHILLED WATER	HORIZ. SPLIT CASE, DOUBLE SUCTION	770	90	25	1750	460/3	2	80	PROVIDE PUMP INERTIA BASE
CHP-2	CHILLED WATER		770	90	25	1750	460/3	2	80	PROVIDE PUMP INERTIA BASE
CHP-3	NOT USED									
CHP-4	CHILLED WATER	END SUCTION	120	80	5	1750	460/3	1	70	PROVIDE PUMP INERTIA BASE
CHP-5	CHILLED WATER	END SUCTION	120	80	5	1750	460/3	1	70	PROVIDE PUMP INERTIA BASE
CWP-1	CONDENSER WATER	VERTICAL TURBINE	1040	60	25	1750	460/3	2		
CWP-2	CONDENSER WATER	VERTICAL TURBINE	1040	60	25	1750	460/3	2		
CWP-3	NOT USED									
CWP-4	CONDENSER WATER	VERTICAL TURBINE	155	60	5	1750	460/3	1		
HWP-1	HEATING WATER	HORIZ. SPLIT CASE, DOUBLE SUCTION	460	75	15	1750	460/3	2	80	PROVIDE PUMP INERTIA BASE
HWP-2	HEATING WATER		460	75	15	1750	460/3	2	80	PROVIDE PUMP INERTIA BASE
HWP-3	HEATING WATER AC-1	IN-LINE CENTRIFUGAL	36	20	½	1750	460/3	1	53	
HWP-4	HEATING WATER AC-2	IN-LINE CENTRIFUGAL	20	20	¼	1750	115/1		45	
HWP-5	HEATING WATER AC-3	IN-LINE CENTRIFUGAL	14	20	¼	1750	115/1		38	
HWP-6	HEATING WATER AC-4	IN-LINE CENTRIFUGAL	47	20	½	1750	460/3	1	54	
HWP-7	HEATING WATER AC-5	IN-LINE CENTRIFUGAL	22	20	¼	1750	115/1		45	
HWP-8	HEATING WATER AC-6	IN-LINE CENTRIFUGAL	25	20	¼	1750	115/1		45	

② NEMA STARTER SIZE

DIFFUSERS, REGISTERS, & GRILLES SCHEDULE

NO.	FUNCTION	DESCRIPTION
CD-1	SUPPLY	DIFFUSER - INVERTED CONE PANEL-TYPE, SQUARE FACE, ROUND NECK, HEAVY GAUGE STEEL. WITH AIR FLOW EQUALIZING GRID, OFF-WHITE BAKED ENAMEL FINISH, FOR LAY-IN CEILING, 24"x24" FACE
CD-2	SUPPLY	SAME AS CD-1 EXCEPT 12"x12" FACE IN 24"x24" PANEL
CD-3	SUPPLY	SAME AS CD-1 EXCEPT 12"x12" FACE WITH FRAME FOR PLASTER MOUNTING
CD-4	SUPPLY	DIFFUSER - RECTANGULAR LOUVERED FACE, RECTANGULAR NECK, HEAVY GAUGE STEEL. BEVELED FRAME FOR PLASTER MOUNTING, WITH AIR FLOW EQUALIZING GRID, OFF-WHITE BAKED ENAMEL FINISH, (4) WAY THROW, SIZE AS SHOWN ON DWGS
CD-5	SUPPLY	SAME AS CD-4 EXCEPT (2) WAY THROW AND FRAME FOR LAY-IN CEILING
CD-6	SUPPLY	SAME AS CD-4 EXCEPT FRAME FOR LAY-IN CEILING
RG-1	RETURN	RETURN GRILLE - MODULAR TYPE, ALUMINUM, WITH ½"x½"x½" GRID. FLANGED BORDER, OFF-WHITE FINISH, FOR T-BAR CEILING
RG-2	RETURN	GRILLE - SIDEWALL TYPE, ALUMINUM, WITH LOUVERS SPACED ¾" APART AT 0°, OFF-WHITE FINISH
RG-3	RETURN	RETURN GRILLE - HEAVY DUTY STEEL, WITH BLADES SPACED ¾" APART AT 45°, OFF-WHITE FINISH
SR-1	SUPPLY	SIDEWALL REGISTER - ALUMINUM, WITH (2) SETS OF AIRFOIL LOUVERS SPACED ¾" APART AND OPPOSED-BLADE DAMPER, FRONT LOUVERS TO BE HORIZONTAL, REAR LOUVERS TO BE VERTICAL. OFF-WHITE BAKED ENAMEL FINISH
TG-1	TRANSFER	SAME AS RG-1
TG-2	TRANSFER	SAME AS RG-1 EXCEPT PLASTER MOUNTING
ER-1	EXHAUST	SAME AS RG-1 EXCEPT PLASTER MOUNTING, WITH OPPOSED-BLADE DAMPER
ER-2	EXHAUST	SAME AS RG-2 EXCEPT WITH OPPOSED-BLADE DAMPER

STEAM TRAP SCHEDULE

NO.	EQUIPMENT SERVED	CAPACITY LBS/HR	DIFF. PRESS. PSIG	TRAP TYPE	REMARKS
T-HX-1	HEATING WATER CONVERTER	21,700	15	F&T	
T-HWH-1	DOMESTIC WATER HEATER	650	15	F&T	
T-HM	HUMIDIFIERS	70	15	F&T	
T-HP	HIGH PRESSURE DRIP	300	100	INVERTED BUCKET	
T-LP	LOW PRESSURE DRIP	70	25	F&T	

RETURN AIR FAN SCHEDULE

UNIT NO.	FAN SCFM	TOTAL STATIC PRESS. IN W.C.	MAX. OUTLET VEL FPM	RPM	MOTOR BHP/MOTOR HP	MOTOR VOLTS/PH	③	REMARKS
RAF-1	24,200	2.0	1760	1130	16.2/20	460/3	2	
RAF-2	13,970	2.0	1260	950	7.7/10	460/3	1	
RAF-3	9,750	2.0	1310	1225	5.5/7.5	460/3	1	
RAF-4	32,670	2.0	1620	840	20.5/25	460/3	2	
RAF-5	15,250	2.0	1370	1015	8.5/10	460/3	1	
RAF-6	17,060	2.0	1530	1085	10.0/15	460/3	2	

③ NEMA STARTER SIZE

CONTROL VALVE SCHEDULE

VALVE NO.		SERVICE	CAPACITY STM LBS/HR WATER GPM	STEAM INLET PSIG	PRESS. DROP PSI	VALVE TYPE	REMARKS
AIR CONDITIONING UNIT							
AC-1	V-1	HWR	36.0	---	4.5	3-WAY	
	V-2	CHR	298.0	---	6.5	2-WAY	
AC-2	V-1	HWR	20.0	---	4.5	3-WAY	
	V-2	CHR	97.0	---	6.5	2-WAY	
AC-3	V-1	HWR	14.0	---	4.5	3-WAY	
	V-2	CWR	68.0	---	6.5	2-WAY	
AC-4	V-1	HWR	47.0	---	4.5	3-WAY	
	V-2	CWR	500.0	---	6.5	2-WAY	
AC-5	V-1	HWR	22.0	---	4.5	3-WAY	
	V-2	CHR	192.0	---	6.5	2-WAY	
AC-6	V-1	HWR	25.0	---	4.5	3-WAY	
	V-2	CWR	217.0	---	6.5	2-WAY	
FAN COIL UNIT							
FC-101	V-1	HWR	17.4	---	4.5	3-WAY	
	V-2	CHR	21.1	---	6.5	2-WAY	
FC-112	V-1	HWR	15.4	---	4.5	3-WAY	
	V-2	CHR	18.9	---	6.5	2-WAY	
FC-103	V-1	HWR	5.9	---	4.5	3-WAY	
	V-2	CHR	11.9	---	6.5	2-WAY	
FC-104	V-1	HWR	11.1	---	4.5	3-WAY	
	V-2	CHR	13.5	---	6.5	2-WAY	
FC-105	V-1	HWR	3.3	---	4.5	3-WAY	
	V-2	CHR	6.7	---	6.5	2-WAY	
FC-106	V-2	CHR	.9	---	6.5	2-WAY	
FC-107	V-1	HWR	3.9	---	4.5	3-WAY	
	V-2	CHR	9.9	---	6.5	2-WAY	
FC-108,110	V-1	HWR	5.8	---	4.5	3-WAY	
	V-2	CHR	11.7	---	6.5	2-WAY	
FC-109	V-1	HWR	5.2	---	4.5	3-WAY	
	V-2	CHR	10.3	---	6.5	2-WAY	
FC-111	V-1	HWR	2.8	---	4.5	3-WAY	
	V-2	CHR	5.7	---	6.5	2-WAY	
FC-113,114	V-1	HWR	1.5	---	4.5	3-WAY	
	V-2	CHR	3.1	---	6.5	2-WAY	
FC-201	V-1	HWR	11.7	---	4.5	3-WAY	
	V-2	CHR	14.0	---	6.5	2-WAY	
FC-202	V-1	HWR	25.5	---	4.5	3-WAY	
	V-2	CHR	31.0	---	6.5	2-WAY	
FC-203	V-1	HWR	15.1	---	4.5	3-WAY	
	V-2	CHR	18.4	---	6.5	2-WAY	
FC-204	V-1	HWR	11.4	---	4.5	3-WAY	
	V-2	CHR	13.9	---	6.5	2-WAY	
FC-205	V-1	HWR	6.2	---	4.5	3-WAY	
	V-2	CHR	7.7	---	6.5	2-WAY	
FC-206	V-1	HWR	26.8	---	4.5	3-WAY	
	V-2	CHR	32.6	---	6.5	2-WAY	
FC-207	V-1	HWR	4.7	---	4.5	3-WAY	
	V-2	CHR	5.7	---	6.5	2-WAY	
FC-208	V-1	HWR	11.3	---	4.5	3-WAY	
	V-2	CHR	13.8	---	6.5	2-WAY	
FC-209	V-1	HWR	1.7	---	4.5	3-WAY	
	V-2	CHR	2.0	---	6.5	2-WAY	
FC-210	V-1	HWR	5.9	---	4.5	3-WAY	
	V-2	CHR	7.0	---	6.5	2-WAY	
FC-211	V-1	HWR	10.9	---	4.5	3-WAY	
	V-2	CHR	13.2	---	6.5	2-WAY	
FC-212	V-1	HWR	11.3	---	4.5	3-WAY	
	V-2	CHR	13.7	---	6.5	2-WAY	
FC-213	V-1	HWR	5.2	---	4.5	3-WAY	
	V-2	CHR	6.3	---	6.5	2-WAY	
FC-214	V-1	HWR	5.7	---	4.5	3-WAY	
	V-2	CHR	6.8	---	6.5	2-WAY	
FC-215	V-1	HWR	5.4	---	4.5	3-WAY	
	V-2	CHR	6.5	---	6.5	2-WAY	
CUH-101	V-1	HWR	1.7	---	4.5	3-WAY	
HEATING WATER HX V-1		S(25)	7185	25	15	2-WAY	
DOMESTIC HOT WATER HWH V-1		S(25)	208	25	15	2-WAY	
CHILLED WATER BY-PASS CH-V-6		CHR	505	---	10	2-WAY	
CONDENSER WATER							
CH-1	V-1	CWR	1040	---	2	2-WAY	
CH-2	V-2	CWR	1040	---	2	2-WAY	
CH-4	V-4	CWR	155	---	2	2-WAY	
TOWER BY-PASS	V-5	CWR	1815	---	2	*	* (2) BUTTERFLY VALVES LINKED TOGETHER
CHILLED WATER HX'S							
LAB COOLING WATER (CHSL) V-1		CHS	60	---	4.5	3-WAY	
HYDRAULIC SYSTEM	V-1	CHS	25	---	0.5	2-WAY	

M-10

A.M. KINNEY, INC.
CONSULTING ENGINEERS
CINCINNATI, OHIO

EFD DWG. NO. 289175
JOB ORDER NO. 5F5215
STA. PROJ. NO. P-241
DES. RAB DWN. RAA
PROJ. MGR. JHKY CH. ARCH/ENGRJES
EFD APVD ... F.P. ...
BR. MGR. ... DES. DR. ...
APPROVED DATE
ACTIVITY-SATISFACTORY TO
APPROVED ... DATE 3/27/89
FOR EFD COMMANDER NAVFAC

STATE OF OHIO — R. C. WIER — 24615 — REGISTERED PROFESSIONAL ENGINEER

DEPARTMENT OF THE NAVY — NAVAL FACILITIES ENGINEERING COMMAND
ATLANTIC DIVISION
NAVAL STATION NORFOLK, VIRGINIA

NAVAL AIR REWORK FACILITY
NORFOLK, VIRGINIA
MATERIALS/STANDARDS LABORATORY FACILITY
SCHEDULES II

SIZE F | CODE IDENT. NO. 80091 | NAVFAC DRAWING NO. 4189175
CONSTR. CONTR. NO. N62470-85-B-5215
SCALE NONE | SPEC. 05-85-5215 | SHEET 76 OF 105

REVISIONS			
SYM	DESCRIPTION	DATE	APPROVED

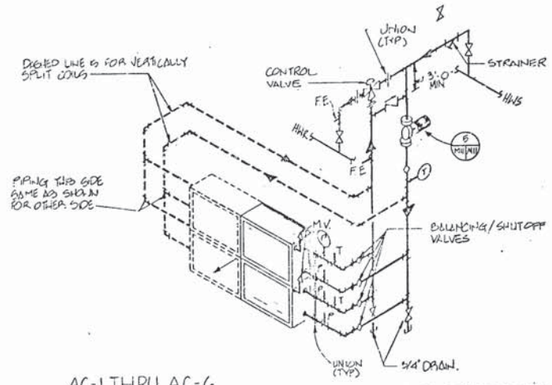

AC-1 THRU AC-6
HOT WATER HEATING COIL PIPING DIAGRAM (1 / M11)
NO SCALE

WHERE COILS ARE SPLIT INTO (2) OR MORE SECTIONS, EACH SECTION SHALL BE PIPED SEPARATELY

M-4, M-6

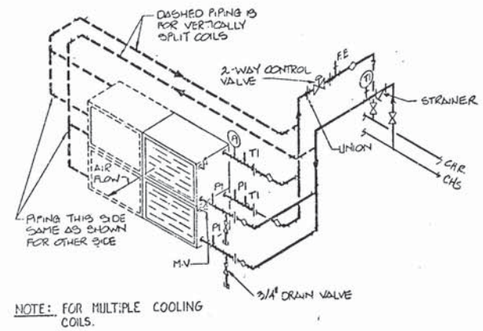

NOTE: FOR MULTIPLE COOLING COILS.

COOLING COIL PIPING DIAGRAM (2 / M11)
NO SCALE

WHERE COILS ARE SPLIT INTO (2) OR MORE SECTIONS, EACH SECTION SHALL BE PIPED SEPARATELY.

M-4, M-6

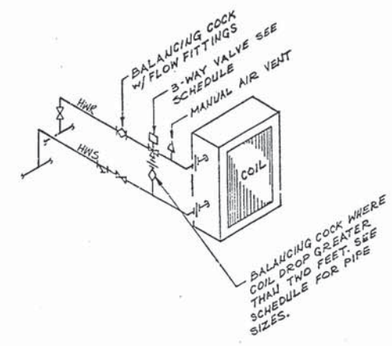

3-WAY VALVE PIPING CONFIGURATION
HOT WATER HEATING FAN COIL UNIT PIPING DETAIL (3 / M11)
NO SCALE

M-4, M-6

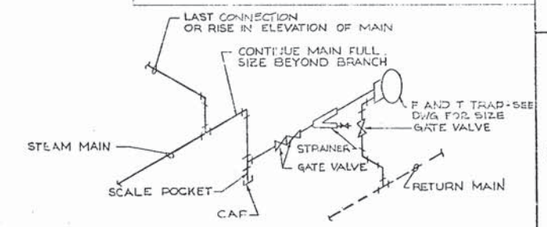

LOW PRESSURE STEAM MAIN DRIP (4 / M11)
NO SCALE

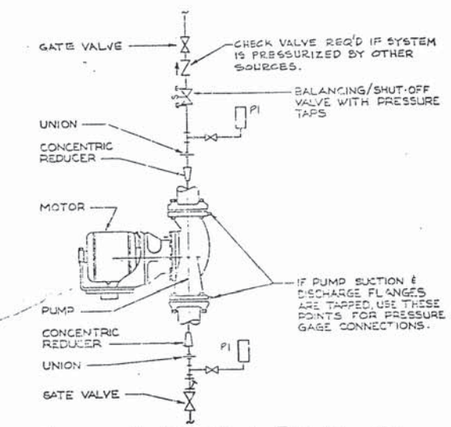

INLINE CENTRIFUGAL PUMP (5 / M11)
NO SCALE

M-4, M-6

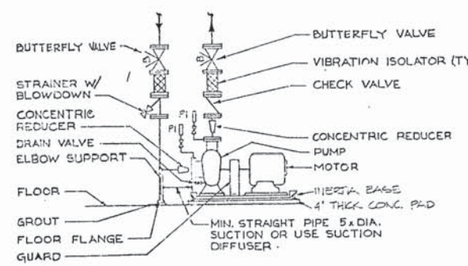

BASE MOUNTED CENTRIFUGAL PUMP (6 / M11)
NO SCALE

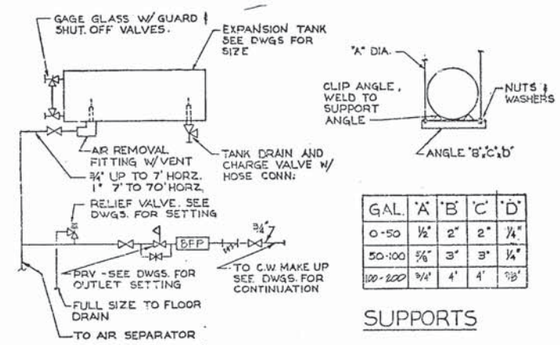

GAL.	'A'	'B'	'C'	'D'
0-50	1/2"	2"	2"	1/4"
50-100	5/8"	3"	3"	1/4"
100-200	3/4"	4"	4"	3/8"

SUPPORTS

EXPANSION TANK 0-100 GAL (8 / M11)
NO SCALE

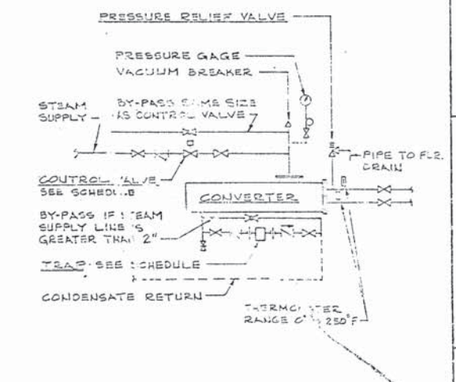

CONVERTER PIPING DETAIL (9 / M11)
NO SCALE

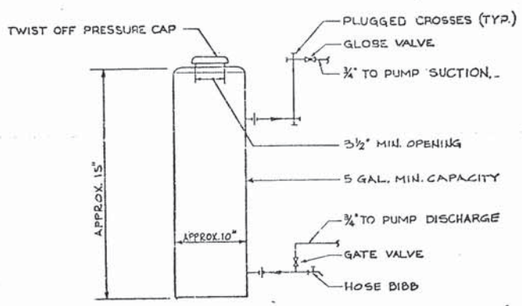

SHOT FEEDER (9 / M11)
NO SCALE

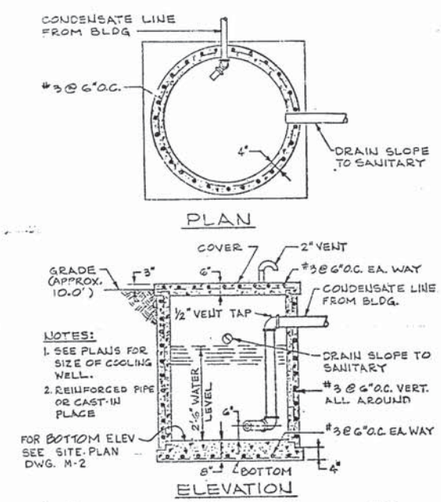

NOTES:
1. SEE PLANS FOR SIZE OF COOLING WELL.
2. REINFORCED PIPE OR CAST-IN PLACE

COOLING WELL DETAIL (10 / M11)
NO SCALE

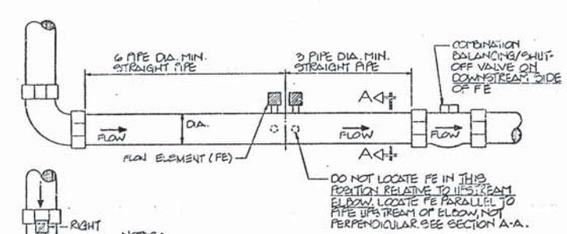

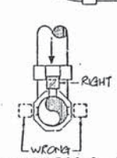

SECTION A-A
SHOWING RELATIONSHIP OF FLOW INDICATOR TO UPSTREAM ELBOW.

NOTES:
1. ONLY STRAIGHT PIPE IS TO BE WITHIN MINIMUM UPSTREAM & DOWNSTREAM DIMENSIONS, NO FITTINGS OR VALVES ARE ALLOWED.
2. FE & VALVES SHALL BE ORIENTED FOR EASY ACCESS. IF TOP OF PIPE IS CLOSE TO STRUCTURE OR OBSTRUCTIONS, ARRANGE PIPING TO LOCATE VALVE OPERATOR & FE CONNECTIONS ON SIDE OF PIPE. NO VALVE SHALL BE INSTALLED WITH THE OPERATOR BELOW THE HORIZONTAL.

FLOW ELEMENT (FE) DETAIL (11 / M11)
NO SCALE

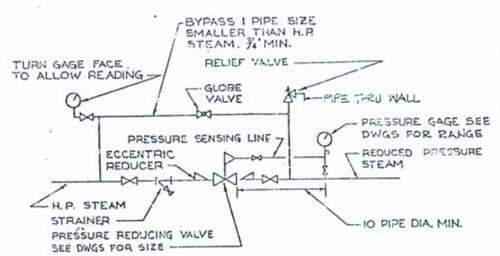

SINGLE STEAM PRV STATION (12 / M11)
NO SCALE

STATE OF OHIO
R. C. WIER
24645
REGISTERED PROFESSIONAL ENGINEER

A.M. KINNEY, INC. CONSULTING ENGINEERS CINCINNATI OHIO	DEPARTMENT OF THE NAVY — NAVAL FACILITIES ENGINEERING COMMAND ATLANTIC DIVISION NAVAL STATION NORFOLK, VIRGINIA
EFD DWG NO 289176	NAVAL AIR REWORK FACILITY NORFOLK, VIRGINIA MATERIALS/STANDARDS LABORATORY FACILITY DETAILS I
JOB ORDER NO 5-5215	
STA PROJ NO P-241	
DES R&B DRAWN RAB	
PROJ MGR JHCV CH ARCH ENGR	
EFD RVD FP	
BR MGR DES DIR	
APPROVED DATE	SIZE F — CODE IDENT NO 80091 — NAVFAC DRAWING NO 4189176
ACTIVITY - SATISFACTORY TO	CONTR IDENT NO N62470-85-B-5215
APPROVED DATE 3/8/89	SCALE NONE — SPEC 05-85-5215 — SHEET 77 OF 105
FOR ELECTION COMMANDER NAVFAC	

M-11

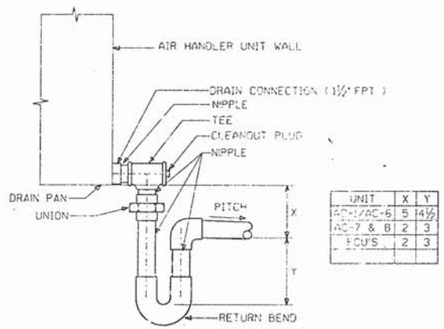

UNIT	X	Y
AC-1/AC-6	5	14½
AC-7 & 8	2	3
FCU'S	2	3

AC UNIT COIL CONDENSATE DRAIN DETAIL (1 / M12)
NO SCALE
M4,M5

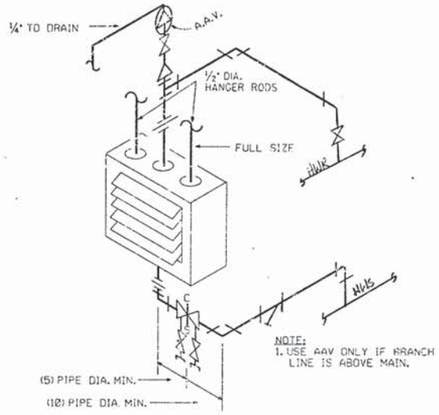

HOT WATER UNIT HEATER DETAIL (2 / M12)
NO SCALE
M4,M5,M7

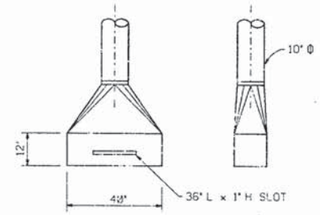

SLOT HOOD DETAIL (3 / M12)
NO SCALE
M3

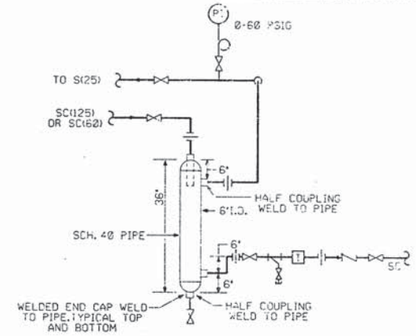

FLASH TANK DETAIL (4 / M12)
NO SCALE
M7

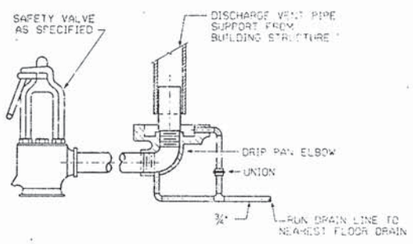

SAFETY VALVE DISCHARGE CONNECTION DETAIL (5 / M12)
NO SCALE
M7

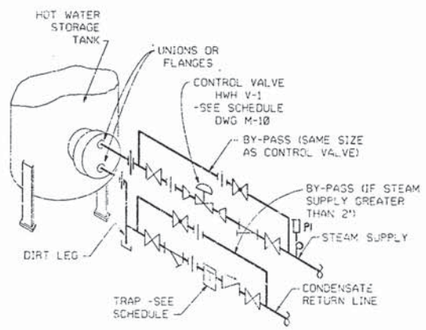

DOMESTIC HOT WATER HEATER STEAM PIPING DETAIL (6 / M12)
NO SCALE
M7

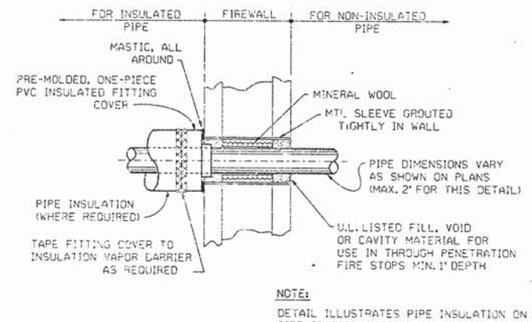

NOTE:
DETAIL ILLUSTRATES PIPE INSULATION ON ONE SIDE OF FIRE RATED WALL. WHERE PIPE IS REQUIRED TO BE INSULATED ON BOTH SIDES, THE INSULATION END TREATMENT SHALL BE DUPLICATED ON BOTH SIDES.

PIPE PENETRATION DETAIL (7 / M12)
(THROUGH FIRE RATED WALL) SIMILAR TO U.L. SYSTEM No. 49
NO SCALE
M4,M6,M7

NOTE: REFER TO ARCHITECTURAL PLANS A-1 AND A-2 FOR LOCATION OF FIRE RATED WALLS (WALL TYPE 6)

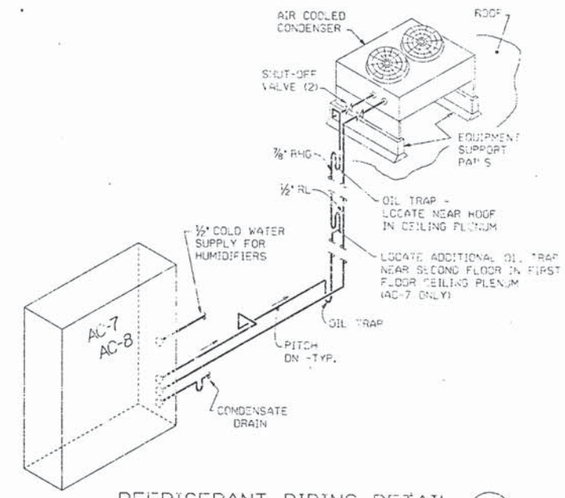

REFRIGERANT PIPING DETAIL FOR AC-7 AND AC-8 (8 / M12)
NO SCALE
SIMILAR FOR UC-1 AND AC-3 (COLD RM #245)
M4,M6

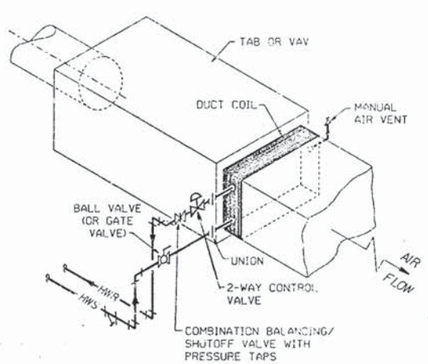

TERMINAL UNIT COIL DETAIL (9 / M12)
NO SCALE
M4,M6

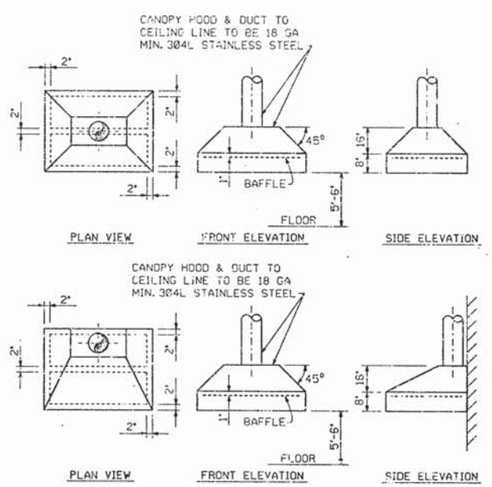

CANOPY HOOD DETAILS (10 / M12)
NO SCALE
NOTE: SEE PLANS FOR HOOD & DUCT SIZES
USE ROD-TYPE HANGERS FOR SUPPORT
*VENT HOODS SIMILAR CONSTRUCTION WITHOUT BAFFLES
M3,M5

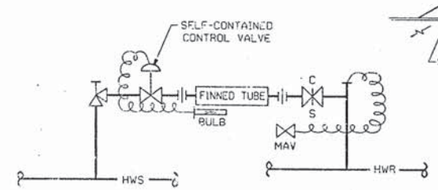

FINNED TUBE RADIATION PIPING DETAIL (11 / M12)
NO SCALE
M4,M6

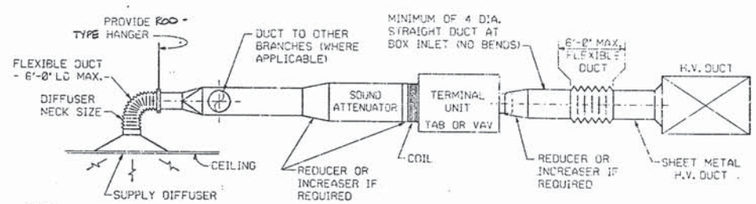

TERMINAL UNIT DUCT TAKE-OFF (12 / M12)
• APPLICABLE FOR DIFFUSERS SERVED BY ROUND DUCTS ONLY
NO SCALE
M3,M5

STATE OF OHIO
R. C. WIER
26646
PROFESSIONAL ENGINEER

M-12

A.M. KINNEY, INC.
CONSULTING ENGINEERS
CINCINNATI, OHIO

DEPARTMENT OF THE NAVY — NAVAL FACILITIES ENGINEERING COMMAND
ATLANTIC DIVISION
NAVAL STATION — NORFOLK, VIRGINIA

E/O DWG. NO.	289177
JOB ORDER NO.	5F5215
STA. PROJ. NO.	P-241
DES. RAB	DRWN. RAA
PROJ. MGR. JHKY	CK. ARCH/ENGINEER
EFDRVD	F.P.
BR. MGR.	DES. DIR.
APPROVED	DATE
ACTIVITY-SATISFACTORY TO	
APPROVED	DATE 3/27/89
FOR EFD COMMANDER NAVFAC	

NAVAL AIR REWORK FACILITY
NORFOLK, VIRGINIA
MATERIALS/STANDARDS LABORATORY FACILITY
DETAILS II

SIZE	CODE IDENT. NO.	NAVFAC DRAWING NO.
F	80091	4189177

CONSTR. CONTR. NO. N62470-85-B-5215
SCALE AS NOTED SPEC. 05-85-52'5
SHEET 78 OF 105

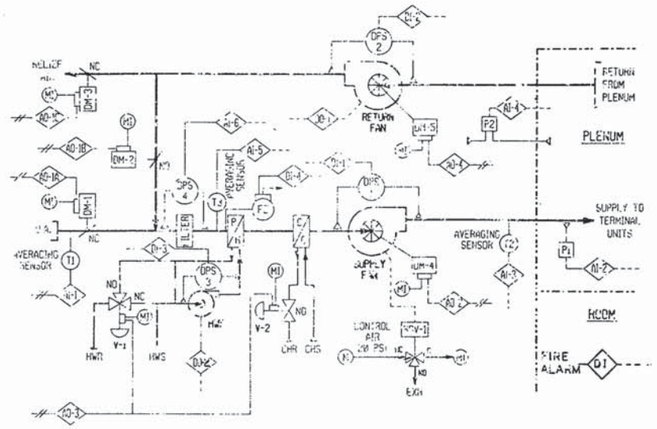

PRIMARY AIR SYSTEM CONTROL
(AC-1 THRU AC-6)

SEQUENCE OF OPERATION

1. SUPPLY FAN IS STARTED MANUALLY AND RUNS CONTINUOUSLY. DIFFERENTIAL PRESSURE SWITCH DPS-1, TO ALARM UPON FAN FAILURE.
2. CONTROL AIR SOLENOID, SOV-1, IS ACTIVATED WHEN SUPPLY FAN IS STARTED, ALLOWING OUTDOOR AIR DAMPER, DM-1, TO OPEN TO MINIMUM POSITION AS SCHEDULED FOR AC UNITS ON DWG M-9.
3. RETURN FAN IS STARTED AUTOMATICALLY WITH A 5 SECOND DELAY AFTER SUPPLY FAN STARTS. DIFFERENTIAL PRESSURE SWITCH, DPS-2, TO ALARM UPON FAN FAILURE.
4. TEMPERATURE CONTROL SYSTEM WITH:
   a. STATIC PRESSURE SENSOR, P1, LOCATED IN SUPPLY DUCT TO MODULATE INLET VANE DAMPER FOR SUPPLY FAN TO MAINTAIN CONSTANT DUCT STATIC PRESSURE
   b. TEMPERATURE SENSOR, T1, IN OUTDOOR AIR, TO OPERATE CIRCULATING PUMP, WHP, AT OUTDOOR AIR TEMPERATURES BELOW 58°F. DPS-3 TO ALARM UPON PUMP FAILURE.
   c. SUPPLY AIR TEMPERATURE SENSOR, T2, LOCATED IN SUPPLY DUCT, WILL OPEN THE PREHEAT COIL VALVE V-1 AND CLOSE V-2 WHEN SUPPLY AIR TEMPERATURE FALLS BELOW SET POINT; AND UPON RISING CONTROL TEMPERATURE, WILL SEQUENTIALLY CLOSE PREHEAT COIL VALVE, V-1, AND OPEN COOLING COIL VALVE, V-2, TO MAINTAIN SET POINT AT 52°F FOR AC-1 AND AC-4, AND 54°F FOR AC-2, AC-3, AC-5, AND AC-6.
5. WHEN OUTDOOR AIR TEMPERATURE IS BELOW 58°F, TEMPERATURE CONTROL SYSTEM TO MODULATE DAMPERS DM-1, DM-2, AND DM-3 TO CONTROL SUPPLY AIR TEMPERATURE, T2, AND LOW LIMIT, T3, (SET POINT @ 46°F.) UPON FURTHER DROP OF TEMPERATURE BELOW SET POINT, TEMPERATURE CONTROL SYSTEM TO CLOSE OUTDOOR AIR DAMPER TO MINIMUM POSITION AND MODULATE HW VALVE, V-1, TO MAINTAIN SET POINT.
6. PLENUM PRESSURE IS CONTROLLED BY PRESSURE SENSOR, P2, THROUGH RETURN FAN VARIABLE INLET VANE DAMPER. AS PLENUM PRESSURE INCREASES, THE INLET VANE DAMPER WILL MODULATE OPEN.
7. FREEZESTAT, FZ, THROUGH HARDWIRE CONNECTIONS, WILL STOP THE SUPPLY FAN AND THE RETURN FAN WHEN THE MIXED AIR TEMPERATURE DROPS BELOW THE SET POINT (34°F)
8. AC 1 THRU AC-6 SHALL AUTOMATICALLY STOP WHEN THE BUILDING FIRE ALARM SYSTEM IS ACTIVATED INTO AN "ALARM" CONDITION.

INDOOR DESIGN CONDITIONS				
	SUMMER		WINTER	
FOR ROOMS BEING CONDITIONED BY	DRY BULB TEMP °F	RELATIVE HUMIDITY % RH	DRY BULB TEMP °F	RELATIVE HUMIDITY % RH
AC-1 AND AC-4	70 ± 2	50 MAXIMUM	70 ± 2	30 MINIMUM
AC-2, AC-3, AC-5 AC-6	72 ± 2	45 ± 5	72 ± 2	30 MINIMUM
AC-7 (ROOM 119)	68 ± 2 PER 20 MIN	30 - 50 @ 22 FOR 24 HR CHANGE RATE	68 ± 2 PER 20 MIN	30 - 50 @ 22 FOR 24 HR CHANGE RATE
	@ TEMPERATURE/HUMIDITY SENSOR CLOSEST TO AC-7			
AC-8 (ROOM 262)	71 ± 1.0	45 ± 5	71 ± 1.0	30 - 50
	@ TEMPERATURE SENSOR CLOSEST TO AC-8			

TEMPERTURE CONTROLS FOR AC-7 & AC-8 ARE TO BE PROVIDED AND INSTALLED BY AC UNIT MANUFACTURER

SEQUENCE OF OPERATION
AIR CONDITIONING SYSTEMS
AC-7 AND AC-8

1. SUPPLY FAN IS STARTED MANUALLY AND RUNS CONTINUOUSLY.
2. THE TEMPERATURE CONTROL SYSTEM, WITH TEMPERATURE SENSORS LOCATED IN ROOM:
   a. TO START REFRIGERATION COMPRESSOR, WHICH RUNS CONTINUOUSLY.
   b. TO MODULATE HEATING COIL TO CONTROL ROOM TEMPERATURE AT SET POINT AS SCHEDULED.
3. THE TEMPERATURE CONTROL SYSTEM, WITH HUMIDITY SENSORS LOCATED IN ROOM TO CONTROL HUMIDIFIER AT SET POINT AS SCHEDULED.

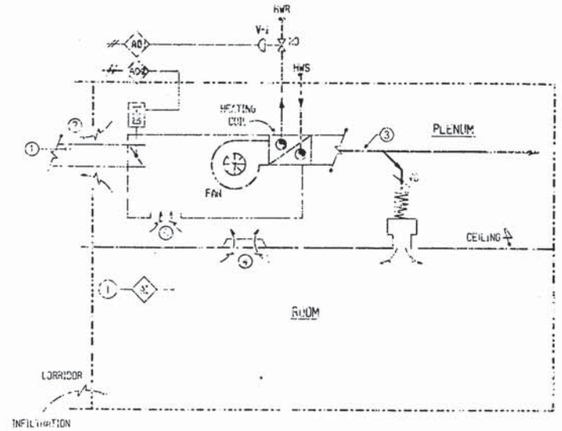

1. PRIMARY AIR FROM CENTRAL AIR HANDLING UNIT
2. RETURN AIR TO CENTRAL PRIMARY AIR HANDLING UNIT
3. SECONDARY SUPPLY AIR TO ROOM
4. ROOM RETURN AIR THROUGH HEAT OF LIGHT FIXTURE
5. SECONDARY RETURN AIR TO FAN

TERMINAL AIR BLENDER UNITS CONTROL

SEQUENCE OF OPERATION

1. ROOM TERMINAL FAN IS STARTED MANUALLY AT ROOM LOCAL CONTROL SWITCH AND RUNS CONTINUOUSLY.
2. TEMPERATURE CONTROL SYSTEM, WITH TEMPERATURE SENSOR LOCATED IN ROOM TO MODULATE THE VARIABLE VOLUME SUPPLY DAMPER, DM-1, TO MAINTAIN ROOM TEMPERATURE AS SCHEDULED ON THIS DRAWING (INDOOR DESIGN CONDITIONS). UPON FURTHER DROP IN ROOM TEMPERATURE, THE CONTROL SYSTEM TO MODULATE HEATING WATER CONTROL VALVE V-1, TO MAINTAIN SET POINT CONDITIONS.

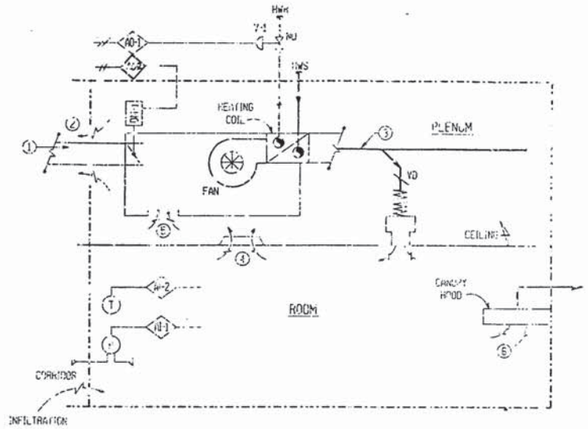

1. PRIMARY AIR FROM CENTRAL AIR HANDLING UNIT
2. RETURN AIR TO CENTRAL PRIMARY AIR HANDLING UNIT
3. SECONDARY SUPPLY AIR TO ROOM
4. ROOM RETURN AIR THROUGH HEAT OF LIGHT FIXTURE
5. SECONDARY RETURN AIR TO FAN
6. EXHAUST AIR THROUGH HOOD

TERMINAL AIR BLENDER UNITS CONTROL WITH CANOPY HOOD

SEQUENCE OF OPERATION

1. ROOM TERMINAL FAN IS STARTED MANUALLY AT ROOM LOCAL CONTROL SWITCH AND RUNS CONTINUOUSLY.
2. TEMPERATURE CONTROL SYSTEM TO MODULATE PRIMARY AIR DAMPER, DM-1, OPEN ON GREATER DEMAND FROM THE ROOM TEMPERATURE OR PRESSURE DIFFERENTIAL BETWEEN ROOM AND CORRIDOR.
   a. CONTROL SYSTEM TO MODULATE DM-1 FOR CONTROL OF ROOM PRESSURE AT SET POINT (APPROXIMATELY .025 INCHES WATER NEGATIVE TO CORRIDOR) AS A MINIMUM POSITION.
   b. CONTROL SYSTEM WITH TEMPERATURE SENSOR LOCATED IN ROOM, WILL OPEN DAMPER, DM-1, WHEN ROOM TEMPERATURE RISES ABOVE SET POINT AND WILL CLOSE TO MINIMUM POSITION (PER SCHEDULE ON DRAWING M-10 OR CONTROLLED UNDER 2a). WHEN ROOM TEMPERATURE DROPS BELOW SET POINT. UPON FURTHER DROP IN ROOM TEMPERATURE, CONTROL SYSTEM WILL OPEN HEATING WATER VALVE V-1, TO MAINTAIN ROOM TEMPERATURE SET POINT (AS SCHEDULED ON THIS DRAWING).
3. LAB HOOD EXHAUST FANS ARE STARTED MANUALLY AT THE HOOD.

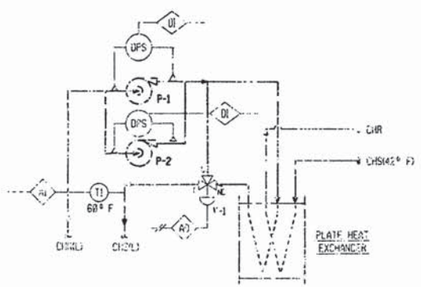

LABORATORY COOLING WATER SYSTEM
SIMILAR FOR HYDRAULIC COOLING WATER SYSTEM

SEQUENCE OF OPERATION

1. THE CONTROL SYSTEM WITH TEMPERATURE SENSOR, T1, LOCATED IN LABORATORY COOLING WATER SUPPLY TO MODULATE VALVE V-1 TO MAINTAIN SET POINT TEMPERATURE OF 60°F AS SENSED BY T1.
2. EITHER CIRCULATING PUMP, P-1 OR P-2, FOR LABORATORY COOLING WATER IS STARTED MANUALLY AND RUNS CONTINUOUSLY. (THE HYDRAULIC COOLING WATER SYSTEM HAS ONLY ONE PUMP.) DIFFERENTIAL PRESSURE SWITCH, DPS, TO ALARM UPON PUMP FAILURE WHETHER PUMP RUNNING.

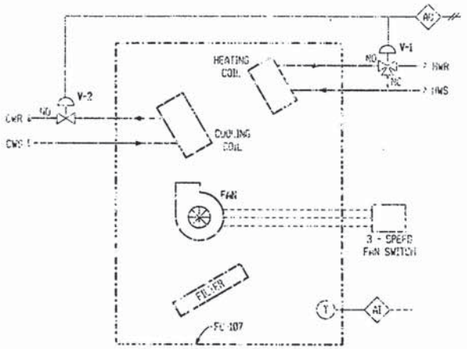

FAN COIL UNIT
FOR VESTIBULE

SEQUENCE OF OPERATION

1. FAN TO START MANUALLY AND RUN CONTINUOUSLY.
2. TEMPERATURE CONTROL SYSTEM, WITH TEMPERATURE SENSOR LOCATED IN UNIT RETURN, WILL OPEN CHILLED WATER VALVE, V-2, WHEN RETURN AIR TEMPERATURE RISES ABOVE SET POINT (72°F) AND WILL CLOSE VALVE V-2 WHEN RETURN AIR TEMPERATURE DROPS BELOW SET POINT; UPON FURTHER DROP IN RETURN AIR TEMPERATURE, CONTROL SYSTEM OPENS HEATING WATER VALVE, V-1, TO MAINTAIN RETURN AIR TEMPERATURE AT SET POINT.

GENERAL NOTE: —— (PNEUMATIC) AND - - - - (ELECTRICAL) SYMBOLS ARE SHOWN FOR CONVENIENCE. THESE ARE SUBJECT TO CHANGE BASED UPON TYPE OF SENSORS, CONTROLLERS, OPERATORS, AND METHOD OF TRANSMITTING SIGNALS ACTUALLY USED FOR THE DDC SYSTEM. ALL WIRING IS TO BE TWISTED SHIELDED PAIR.

M-15

W.M. KINNEY, INC.
CONSULTING ENGINEERS
CINCINNATI, OHIO

DEPARTMENT OF THE NAVY — NAVAL FACILITIES ENGINEERING COMMAND
ATLANTIC DIVISION
NAVAL STATION — NORFOLK, VIRGINIA

EFD DWG. NO.	8241178
JOB ORDER NO.	8520
STA. PROJ. NO.	P-24
DES. BAB	DRN. RAA
PROJ. MGR. JWY	DES. ARCH/ENG. JES
EFD/RND. ELECT.	EFD STRUC
BR. MGR. RB	DES. GR. JWE
APPROVED	DATE
ACTIVITY: SATISFACTORY TO	
APPROVED:	DATE: 12/1/85
FOR EFD COMMANDER NAVFAC	

NAVAL AIR REWORK FACILITY
NORFOLK, VIRGINIA
MATERIALS/STANDARDS LABORATORY FACILITY
TEMPERATURE CONTROL DIAGRAMS

SIZE	CODE IDENT. NO.	NAVFAC DRAWING NO.
F	80091	4189175

CONSTRU. CONTR. NO. N62470-84-B-4820
SCALE: NONE — APPL. 05-06-1986 — SHEET 10 OF 15

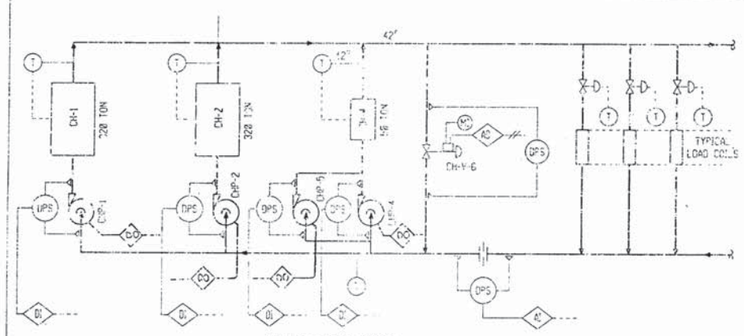

CHILLED WATER CONTROL

(UTILIZING LOAD SIDE FLOW METER AND BYPASS VALVE LIMIT SWITCH)

SEQUENCE OF OPERATION

1. CLOSE MANUAL SWITCH ON DDC TO INITIATE SYSTEM, WHICH WILL START CHILLED WATER PUMP, CHP-4, CONDENSER WATER PUMP, CWP-4, AND ENERGIZE CONTROLS. WHEN CONDENSER WATER FLOW IS ESTABLISHED CHILLER FLOW SWITCH WILL CLOSE AND ENERGIZE CHILLER CH-4 CONTROL CIRCUIT. THE CHILLER CONTROLS WILL MODULATE CAPACITY TO PROVIDE 42°F LEAVING CHILLED WATER TEMPERATURE.
2. AT LOW LOADS THE CHILLED WATER WILL CIRCULATE THROUGH THE BYPASS VALVE, V-6, WHICH WILL MODULATE TO HOLD A PRESET SYSTEM DIFFERENTIAL PRESSURE.
3. AS THE SYSTEM LOAD INCREASES, BYPASS VALVE V-6 WILL MODULATE CLOSED AND WILL REPOSITION THE FIRST LARGE CHILLER AND ASSOCIATED CHILLED WATER PUMP AND CONDENSER WATER PUMP TO START WHEN BYPASS VALVE V-6 IS NEARLY CLOSED. THE CHILLER CONTROLS WILL LOCK IN AND CHILLER, CH-4, AND PUMPS CHP-4 AND CWP-4 WILL SHUT DOWN. BYPASS VALVE V-6 WILL MODULATE TO A NEAR OPEN POSITION.
4. AS THE SYSTEM LOAD CONTINUES TO INCREASE, BYPASS VALVE V-6 WILL MODULATE CLOSED AND THE CHILLED WATER RETURN, CHP, FLOW WILL INCREASE. WHEN THE CHP FLOW REACHES SETPOINT OF 520 GPM, THE NEXT CHILLER WILL START.
5. AS LOAD DECREASES, ONE CHILLER WILL BE DE-ENERGIZED AS THE FLOW FALLS BELOW 520 GPM. SINCE THE SMALLEST CHILLER, CH-4, REPRESENTS LESS THAN 10% OF FULL CAPACITY AND THE CHILLED WATER RETURN FLOW METER IS IN AN UNSTABLE RANGE, THE FLOW METER IS SET TO PROVIDE A PERMISSIVE SIGNAL TO THE FIRST ON, LARGE CHILLER AND ALLOW BYPASS VALVE V-6 POSITION TO PROVIDE THE PILOT SIGNAL TO DE-ENERGIZE THE LAST LARGE CHILLER AND CAUSE THE SMALL STANDBY CHILLER TO START.
6. A SELECTOR SWITCH ENABLES THE LEAD/LAG CHILLER SEQUENCE TO BE ROTATED.

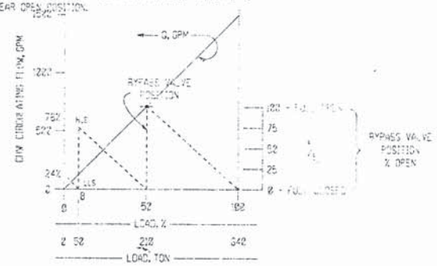

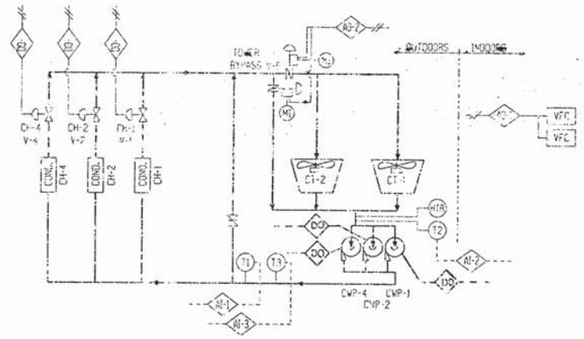

CONDENSER WATER CONTROL

SEQUENCE OF OPERATION

1. REFER TO "SEQUENCE OF OPERATION FOR CHILLED WATER CONTROL", THIS DRAWING, FOR CONDENSER WATER PUMPS.
2. COOLING TOWER, CT-1, (PROVIDE LEAD LAG SEQUENCE CONTROL FOR CT-1 AND CT-2 TO) START AUTOMATICALLY WHEN ANY CHILLER, CH-1, CH-2, OR CH-4 IS STARTED AND CONTROL VALVE, V-1, V-2, OR V-4 IS OPENED. IF THE CONDENSER WATER SUPPLY TEMPERATURE IS ABOVE THE SET POINT OF T-3 (65°F) AND TO RUN CONTINUOUSLY UNTIL SHUTDOWN BY VIBRATION SWITCH OR CONDENSER WATER TEMPERATURE. THE COOLING TOWER FANS ARE VARIABLE SPEED DRIVE AND REVERSING. THE CONTROL SYSTEM WITH TEMPERATURE SENSOR IN CONDENSER WATER SUPPLY TO START AND MODULATE SPEED OF CT-1 FAN IN SEQUENCE WITH CT-2 TO CONTROL SET POINT TEMPERATURE AS SENSED BY T-3. FANS ARE DRIVEN BY MANUALLY REVERSING THE FAN. THE CONTROL SYSTEM, UPON FALLING BELOW SET POINT OF TEMPERATURE SENSOR, T-1, POSITIONS VALVE, V-3, TO DIVERT WATER TO SUMP. THE CONTROL SYSTEM, WITH TEMPERATURE SENSOR T-2 LOCATED IN COOLING TOWER SUMP TO ACTIVATE HEATER WHEN WATER IN SUMP FALLS BELOW 34°F.

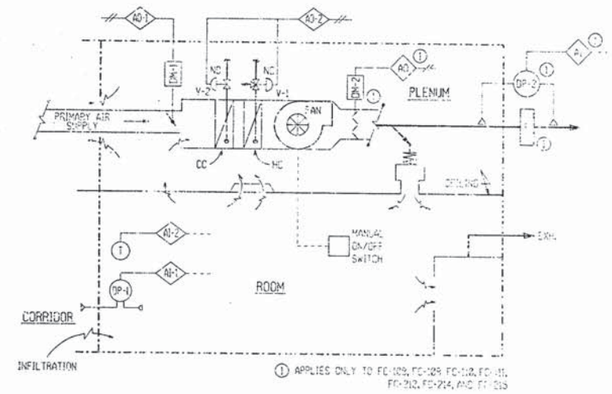

① APPLIES ONLY TO FC-109, FC-128, FC-132, FC-131, FC-212, FC-214, AND FC-215

TERMINAL FAN COIL CONTROL

SEQUENCE OF OPERATION

1. FAN IS STARTED MANUALLY AT ROOM LOCAL CONTROL SWITCH, AND RUNS CONTINUOUSLY. CONTROL AIR IS APPLIED WHEN PRIMARY AIR SYSTEM IS STARTED.
2. TEMPERATURE CONTROL SYSTEM, WITH ROOM DIFFERENTIAL PRESSURE SENSOR, DP-1, TO MODULATE THE PRIMARY AIR DAMPER, DP-2, FOR CONTROL OF ROOM PRESSURE AT SET POINT (APPROXIMATELY .025 INCH) WATER NEGATIVE TO CORRIDOR.
3. TEMPERATURE CONTROL SYSTEM, WITH TEMPERATURE SENSOR LOCATED IN ROOM, WILL OPEN CHILLED WATER CONTROL VALVE, V-2, WHEN ROOM TEMPERATURE RISES ABOVE SET POINT AND WILL CLOSE V-2 WHEN TEMPERATURE DROPS BELOW SET POINT. UPON FURTHER DROP IN ROOM TEMPERATURE, CONTROL SYSTEM WILL OPEN HEATING WATER VALVE, V-1, TO MAINTAIN ROOM SET POINT TEMPERATURE (AS SCHEDULED ON DRAWING M-12).
4. FOR FAN COILS REQUIRING DISCHARGE DAMPER AND PRESSURE FILTERS (SEE NOTE ①), THE TEMPERATURE CONTROL SYSTEM, WITH DIFFERENTIAL PRESSURE SENSOR, DP-3, LOCATED AT FILTER, F, TO MODULATE DAMPER MOTOR, DM-2, TO MAINTAIN CLEANLY **DIFFERENTIAL PRESSURE AS SCHEDULED FOR FAN COIL UNIT.**
5. LAB HOOD EXHAUST FANS ARE STARTED MANUALLY AT THE HOOD.

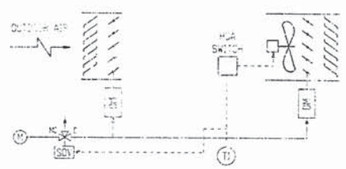

MECHANICAL EQUIPMENT ROOM VENTILATION

SEQUENCE OF OPERATION

1. WHEN HOA SWITCH IS IN THE "A" POSITION, TEMPERATURE CONTROL SYSTEM WITH TEMPERATURE SENSOR, T1, IN EQUIPMENT ROOM TO START EXHAUST FAN ON RISE OF TEMPERATURE ABOVE SET POINT (83°F).
2. EXHAUST FAN WILL START AND SOLENOID VALVE, SOV, WILL OPEN THE INTAKE AND EXHAUST DAMPERS.

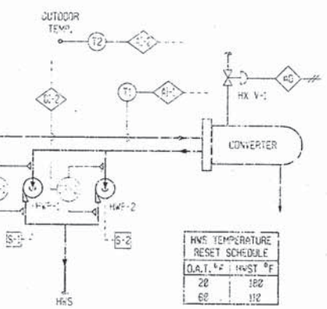

HWS TEMPERATURE RESET SCHEDULE	
O.A.T. °F	HWST °F
20	180
60	112

HOT WATER HEATING CONTROL

SEQUENCE OF OPERATION

1. EITHER PUMP, HWP-1 OR HWP-2, MAY BE STARTED WITH THE MANUAL SWITCH, EITHER S-1 OR S-2. WHEN ONE PUMP IS STARTED, THE OTHER PUMP IS LOCKED OUT.
2. TEMPERATURE CONTROL SYSTEM, WITH TEMPERATURE SENSOR LOCATED IN HWS, T1, AND OUTDOOR AIR, T2, TO MODULATE STEAM CONTROL VALVE, V-1, TO MAINTAIN HEATING WATER SUPPLY TEMPERATURE SET POINTS AS TABULATED.
3. DP-1 OR DP-2 TO ALARM UPON PUMP FAILURE.

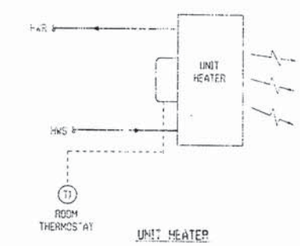

UNIT HEATER

SEQUENCE OF OPERATION

1. FAN WILL OPERATE WHEN "HOA" SWITCH IS PLACED IN HAND "H" POSITION. WITH THE "HOA" SWITCH IN THE AUTO "A" POSITION, THE ROOM THERMOSTAT WILL CYCLE THE UNIT HEATER FAN.

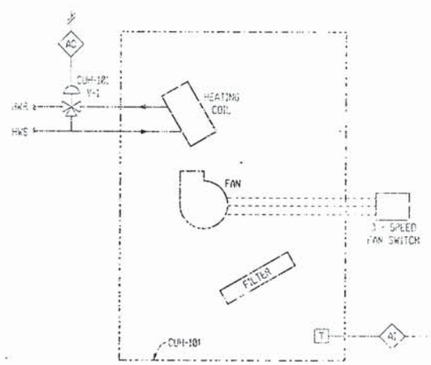

CABINET UNIT HEATER

SEQUENCE OF OPERATION

1. FAN TO START MANUALLY.
2. TEMPERATURE CONTROL SYSTEM, WITH TEMPERATURE SENSOR LOCATED IN UNIT RETURN AIR WILL OPEN HEATING WATER VALVE, V-1, WHEN RETURN AIR TEMPERATURE DROPS BELOW SET POINT (78°F) AND WILL CLOSE V-1 WHEN RETURN AIR TEMPERATURE RISES ABOVE RETURN AIR TEMPERATURE SET POINT.

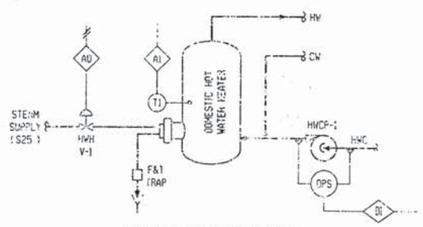

DOMESTIC HOT WATER CONTROL

SEQUENCE OF OPERATION

1. PUMP HWCP-1 IS STARTED MANUALLY AND RUNS CONTINUOUSLY.
2. THE CONTROL SYSTEM WITH TEMPERATURE SENSOR, T1, LOCATED IN STORAGE TANK TO MODULATE STEAM VALVE, V-1, TO MAINTAIN SET POINT TEMPERATURE (142°F) AS SENSED BY T1.

DIFFERENTIAL PRESSURE SWITCH, DPS, TO ALARM UPON PUMP FAILURE.

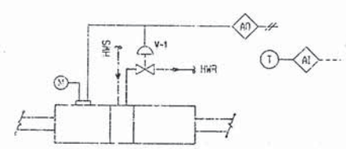

VAV UNIT

SEQUENCE OF OPERATION

1. TEMPERATURE CONTROL SYSTEM, WITH TEMPERATURE SENSOR LOCATED IN ROOM, WILL OPEN VAV UNIT DAMPER WHEN ROOM TEMPERATURE RISES ABOVE SET POINT (PER SCHEDULE ON DWG M-12) AND WILL CLOSE DAMPER TO MINIMUM POSITION (AS SCHEDULED ON DRAWING M-12) WHEN ROOM TEMPERATURE DROPS BELOW SET POINT; UPON FURTHER DROP IN ROOM TEMPERATURE, CONTROL SYSTEM OPENS HEATING WATER VALVE, V-1, TO MAINTAIN ROOM TEMPERATURE SET POINT.

NOTE: CONTROL SHOWN AS DDC FOR CONVENIENCE. CAN BE LOCAL CONTROL.

GENERAL NOTE: [illegible] PNEUMATIC AND [illegible] (ELECTRICAL) SYMBOLS ARE SHOWN FOR CONVENIENCE. THESE ARE SUBJECT TO CHANGE BASED UPON TYPE OF CONTROLLERS, CONTROLLERS, OPERATORS, AND METHOD OF TRANSMITTING SIGNALS ACTUALLY USED FOR THE DDC SYSTEM.

M-14

A.M. KINNEY, INC.
CONSULTING ENGINEERS
CINCINNATI, OHIO

DEPARTMENT OF THE NAVY — NAVAL FACILITIES ENGINEERING COMMAND
NAVAL STATION — ATLANTIC DIVISION — NORFOLK, VIRGINIA

NAVAL AIR REWORK FACILITY
NORFOLK, VIRGINIA
MATERIALS/STANDARDS LABORATORY FACILITY
TEMPERATURE CONTROL DIAGRAMS II

FED. CAD. NO.	289179
JOB ORDER NO.	65215
STA. FIL. NO.	P-26
DRN. RAB	CHK. RAA
PROJ. MGR. JWY	CH. ARCH. ENG. JES
ELEC. [illegible]	FP. [illegible]
BR. MGR. [illegible]	DES. DIR. [illegible]
APPROVED	DATE
ACCEPTY SATISFACTORY TO APPROVED [illegible]	DATE 3/27/89
FOR ENG. DIVISION, NAVFAC	

STATE OF OHIO — R. C. WIER — 25543 — PROFESSIONAL ENGINEER

SIZE F — CONT. IDENT. NO. 80091 — NAVFAC DRAWING NO. 4189179
CONSTR. CONTR. NO. N62470-85-B-5215
SCALE NONE — SPEC. 05-85-5215 — SHEET 8C OF 105

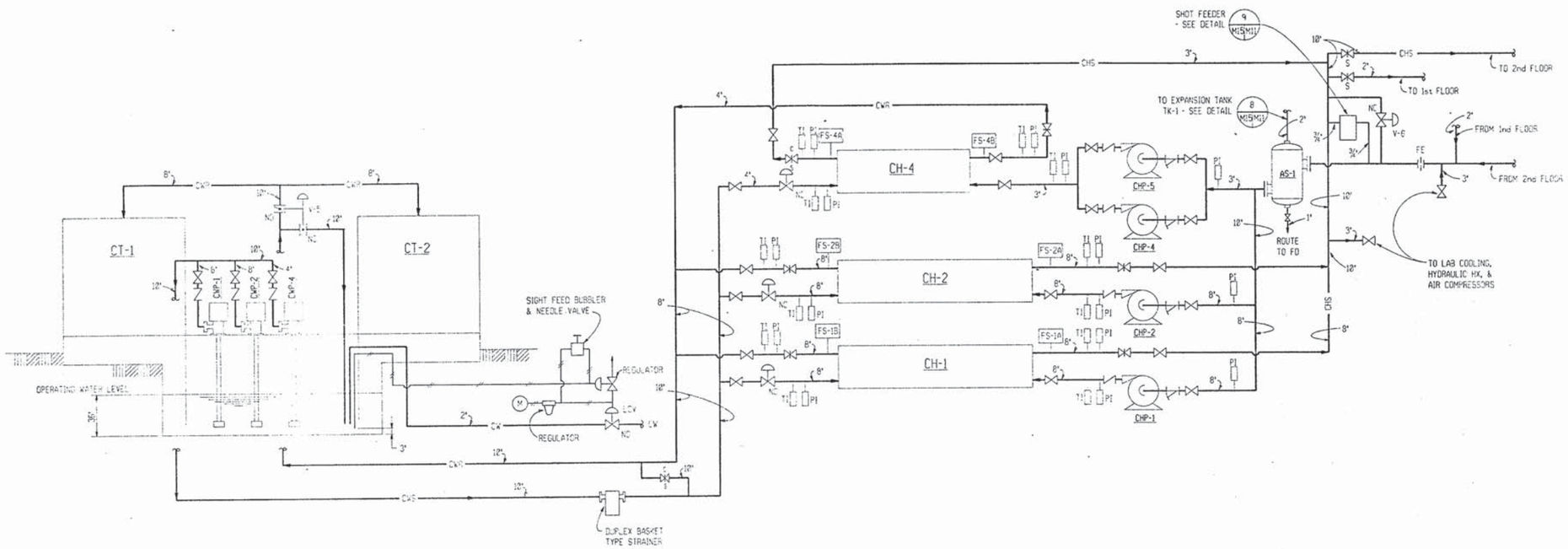

CHILLED WATER & CONDENSER WATER FLOW DIAGRAM

NO SCALE

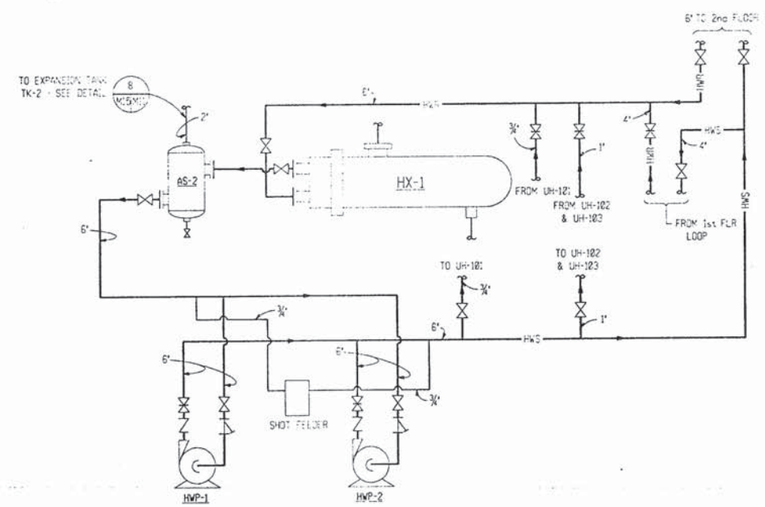

HEATING HOT WATER FLOW DIAGRAM

NO SCALE

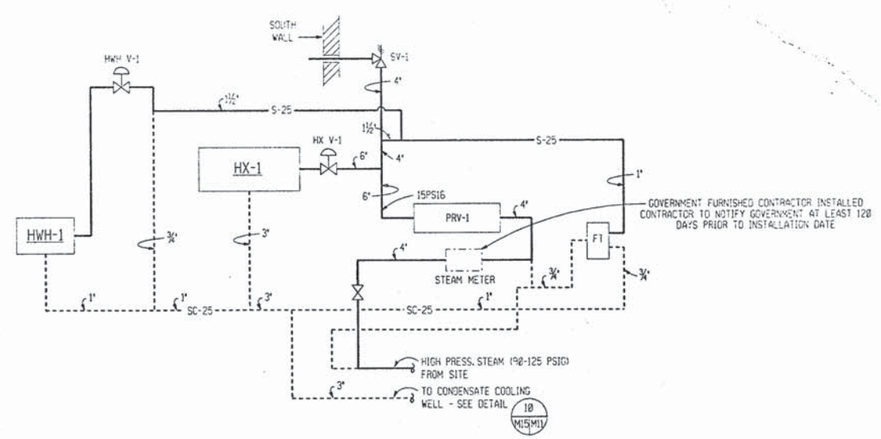

STEAM & CONDENSATE FLOW DIAGRAM

NO SCALE

M-15

A.M. KINNEY, INC.
CONSULTING ENGINEERS
CINCINNATI, OHIO

DEPARTMENT OF THE NAVY — NAVAL FACILITIES ENGINEERING COMMAND
ATLANTIC DIVISION
NAVAL STATION — NORFOLK, VIRGINIA

EFD. DWG. NO. 289180
JOB ORDER NO. SF5215
STA. PROJ. NO. P-241
DES. REC — DRAWN. RAA
PROJ. MGR. JMKY — CH. ARTH. ENGRIES
EFD/RVD. LWBC — P.P. JMJM
BR. MGR. LCB — DES. DIR. JMJM
APPROVED — DATE
ACTIVITY-SATISFACTORY TO
APPROVED — DATE 3/27/89
FOR EFD COMMANDER NAV

STATE OF OHIO — R. C. WIER 24646 — REGISTERED PROFESSIONAL ENGINEER

NAVAL AIR REWORK FACILITY
NORFOLK, VIRGINIA
MATERIALS/STANDARDS LABORATORY FACILITY
STEAM/COND., CHILLED WATER, & HEATING WATER FLOW DIAGRAMS

SIZE F — CODE IDENT. NO. 80091 — NAVFAC DRAWING NO. 4189180
CONSTR. CONTR. NO. N62470-85-B-5215
SCALE NONE — SPEC. 05-85-5215 — SHEET 81 OF 105

Z-133 Record Drawings

ALL DIMENSIONS ARE MILLIMETERS UNLESS OTHERWISE SHOWN

NOTES THIS SHEET:

1. SEE SHEET M1 FOR LEGEND AND GENERAL NOTES.

FAN SCHEDULE

MARK	TYPE	DRIVE	DESCRIPTION	L/S	EXT STATIC AT MAX FLOW (PA)	MIN BLADE OR WHEEL DIAMETER (mm)	MIN MOTOR KW	VOLTS	PHASE	RPM	MAX SOUND POWER LEVELS (DB REF 10^{-12} WATTS) OCTAVE BAND 1	2	3	4	5	6	7	8
F-1A	TUBULAR CENTRIFUGAL	BELT	AH-1A RETURN FAN	4660	357	1020	3.7	480	3	555	90	86	80	76	74	70	68	67
F-1B	TUBULAR CENTRIFUGAL	BELT	AH-1B RETURN FAN	6036	356	910	5.6	480	3	700	89	93	83	77	77	72	69	68
F-2A	TUBULAR CENTRIFUGAL	BELT	AH-2A RETURN FAN	8945	612	1120	11.2	480	3	718	94	92	83	81	79	76	74	71
F-2B	TUBULAR CENTRIFUGAL	BELT	AH-2B RETURN FAN	9480	548	1120	11.2	480	3	674	94	92	83	81	79	76	73	71
F-3A	TUBULAR CENTRIFUGAL	BELT	AH-3A RETURN FAN	9259	398	1120	7.5	480	3	613	93	92	83	80	78	74	72	70
F-3B	TUBULAR CENTRIFUGAL	BELT	AH-3B RETURN FAN	10029	374	1120	7.5	480	3	626	94	93	84	80	78	74	72	70
F-4A	TUBULAR CENTRIFUGAL	BELT	AH-4A RETURN FAN	9943	374	1120	7.5	480	3	624	94	93	84	80	78	74	72	70
F-4B	TUBULAR CENTRIFUGAL	BELT	AH-4B RETURN FAN	9886	299	1120	5.6	480	3	590	93	93	83	80	77	73	71	69
F-5	UTILITY SET	BELT	AREA A TOILET/JANITOR EXHAUST	2628	249	510	2.2	480	3	1341	85	81	85	80	75	73	69	64
F-5A	TUBULAR CENTRIFUGAL	BELT	AH-5A RETURN FAN	2548	332	610	2.2	480	3	1020	85	92	82	76	74	70	68	65
F-5B	TUBULAR CENTRIFUGAL	BELT	AH-5B RETURN FAN	9141	512	1120	11.2	480	3	652	94	92	83	80	78	75	73	70
F-5C	TUBULAR CENTRIFUGAL	BELT	AH-5C RETURN FAN	4450	423	760	5.6	480	3	955	90	92	86	80	78	74	72	69
F-5D	TUBULAR CENTRIFUGAL	BELT	AH-5D RETURN FAN	6191	402	910	5.6	480	3	733	89	93	83	77	77	73	70	68
F-6	UTILITY SET	BELT	AREA B TOILET/JANITOR EXHAUST	2916	249	560	2.2	480	3	1155	84	82	84	79	75	72	68	63
F-7	UTILITY SET	BELT	AREA A EXHAUST	5009	312	760	3.7	480	3	832	84	82	84	77	74	72	66	62
F-8	UTILITY SET	BELT	AREA B EXHAUST	1586	312	410	1.1	480	3	1545	86	77	78	78	74	71	66	60
F-9	PROPELLER	BELT	PENTHOUSE EXHAUST	8721	124	1220	3.7	480	3	598	95	92	91	88	83	79	76	72
F-10	PROPELLER	BELT	CHILLER ROOM PURGE/COOLING	1522	124	610	0.7	480	3	1135	80	83	87	84	80	77	72	69
F-11	IN-LINE	BELT	CHILLER ROOM VENTILATION	260	112	230	0.2	120	1	1357	79	81	69	68	58	55	53	47
F-12	IN-LINE	BELT	MAIN ELEC. ROOM VENTILATION	5588	124	760	5.6	480	3	1138	89	87	92	86	83	80	77	73
F-13	PROPELLER	DIRECT	FIRE PUMP ROOM VENTILATION	283	38	360	0.1	120	1	860	67	68	65	62	54	53	43	41
F-14	PRV	BELT	MAIN 5TH FL ELEC. ROOM VENTILATION	703	299	360	0.6	480	3	1425	82	77	77	70	64	63	59	54

NOTES:

1. SEE VIBRATION ISOLATOR SCHEDULE SHEET M3.
2. SOUND POWER LEVELS SHALL BE MEASURED AT FAN INLET.

AIR HANDLING UNIT SCHEDULE

MARK	TYPE	FAN SECTION: MAX L/S (1)	MIN L/S	MIN O.A. L/S	EXTERNAL S.P. AT MAX FLOW (PA)	MIN MOTOR KW	VOLTS	PHASE	RPM	COOLING COIL: E.A.T. (°C) DB	E.A.T. (°C) WB	L.A.T. (°C) DB	L.A.T. (°C) WB	CAPACITY TOTAL (KW)	CAPACITY SENSIBLE (KW)	L/S	MAX AIR PRESSURE DROP (PA)	HEATING COIL: E.A.T. (°C)	CAPACITY (KW)	HOT WATER L/S	MAX AIR PRESSURE DROP (PA)	FILTER SECTION: TYPE	MIN DUST SPOT EFFICIENCY (PERCENT)	MAX INITIAL AIR PRESSURE DROP (PA)
AH-1A	VARIABLE AIR VOLUME	7796	5568	3136	1247	18.6	480	3	1833	28.2	20.6	13.9	13.4	199	137	7.12	159	4.1	62	0.88	32	C-TA	85	197
AH-1B	VARIABLE AIR VOLUME	6424	2947	963	1008	18.6	480	3	1904	28.7	21.2	14.2	13.0	187	114	6.71	202	-8.3	80	1.15	32	C-TA	85	179
AH-2A	VARIABLE AIR VOLUME	10903	5464	2289	1203	29.8	480	3	1414	27.9	18.6	14.1	13.2	201	185	7.21	129	—	—	—	—	C-TA	85	164
AH-2B	VARIABLE AIR VOLUME	11342	5782	2008	1086	29.8	480	3	1379	27.4	18.5	14.2	13.2	201	185	7.23	102	—	—	—	—	C-TA	85	164
AH-3A	VARIABLE AIR VOLUME	11127	6828	2482	1370	29.8	480	3	1477	28.3	18.8	13.1	12.5	237	209	8.51	107	—	—	—	—	C-TA	85	159
AH-3B	VARIABLE AIR VOLUME	12227	7583	2199	1121	29.8	480	3	1181	27.7	18.3	13.0	12.4	247	221	8.71	72	—	—	—	—	C-TA	85	184
AH-3C	NOT USED																							
AH-4A	VARIABLE AIR VOLUME	11878	7314	2643	1121	29.8	480	3	1168	28.2	18.8	13.0	12.4	257	222	9.23	73	—	—	—	—	C-TA	85	112
AH-4B	VARIABLE AIR VOLUME	12071	7418	2643	996	29.8	480	3	1133	28.2	18.7	13.4	12.6	247	219	8.88	73	—	—	—	—	C-TA	85	115
AH-5A	CONSTANT VOLUME	2690	2690	637	859	7.5	480	3	2652	27.1	19.5	13.2	12.9	61	46	NOTE 5	154	7.3	10	0.14	30	C-TA	85	227
AH-5B	VARIABLE AIR VOLUME	10420	5738	2230	1108	29.8	480	3	1390	26.9	19.3	12.9	12.8	231	179	8.29	182	8.5	30	0.43	27	C-TA	85	142
AH-5C	VARIABLE AIR VOLUME	4993	2711	554	1013	14.9	480	3	2112	26.1	18.6	12.9	12.8	100	81	3.60	204	—	—	—	—	C-TA	85	194
AH-5D	VARIABLE AIR VOLUME	7772	4396	1581	1218	22.4	480	3	1827	26.8	19.2	12.7	12.5	178	135	6.39	194	9.4	18	0.26	35	C-TA	85	194

NOTES:

1. EXTERNAL STATIC PRESSURE DROP DOES NOT INCLUDE COOLING COIL, HEATING COIL, FILTER, MIXING BOX, BLENDER, OR CASING LOSSES.
2. COOLING COIL CAPACITIES SHALL BE BASED ON 6.7°C E.W.T. WATER PRESSURE DROP SHALL NOT EXCEED 30 KPA.
3. COIL FACE VELOCITY SHALL NOT EXCEED 2.5 M/S.
4. HEATING COIL CAPACITIES SHALL BE BASED ON 82°C E.W.T. WATER PRESSURE DROP SHALL NOT EXCEED 15 KPA. HEATING COIL CAPACITIES SHALL BE BASED ON MIN AIRFLOW. AIR PRESSURE DROP SHALL BE BASED ON MAX AIR FLOW.
5. AH-5A COOLING COIL SHALL BE DX TYPE. COORDINATE WITH ACCU-1. SEE SHEET M3 FOR ACCU SCHEDULE.
6. SEE VIBRATION ISOLATOR SCHEDULE, SHEET M3.
7. SEE SHEET M3B FOR PIPING DETAILS.
8. SEE SOUND POWER LEVELS SHEET M3.
9. FILTER TYPES SHALL BE AS FOLLOWS: TYPE C – TA SHALL BE A 305mm CARTRIDGE FILTER WITH 50mm THROWAWAY PREFILTERS. EXTERNAL STATIC INCLUDES A FILTER LOADING ALLOWANCE OF 125 PA.
10. FILTER INITIAL AIR PRESSURE DROP SHALL INCLUDE PREFILTER.
11. BLENDER PRESSURE DROP NOT TO EXCEED 37 PA.

DESICCANT UNIT SCHEDULE

MARK	SUPPLY FAN: CAPACITY L/S	EXTERNAL STATIC (PA)	MIN MOTOR KW	FINAL UNIT SUPPLY AIR (°C) DB	WB	DESICCANT WHEEL: E.A.T. (°C) DB	E.A.T. (°C) WB	L.A.T. (°C) DB	L.A.T. (°C) WB	REGENERATION COIL: CAPACITY	STEAM KG/HR	THERMAL WHEEL: E.A.T. (°C) DB	E.A.T. (°C) WB	L.A.T. (°C) DB	L.A.T. (°C) WB	REGENERATION FAN: CAPACITY L/S	MIN MOTOR KW	ELECTRICAL: VOLTS	PHASE	NEMA STARTER SIZE
DU-1	7414	125	14.9	37.8	21.1	32.8	24.4	71.1	28.3	173 KW	280	71.1	28.3	38.9	21.5	6135	18.6	480	3	2
DU-2	6848	125	14.9	38.3	20.9	32.8	24.4	71.1	28.3	173 KW	280	71.1	28.3	38.9	21.5	6135	18.6	480	3	2

NOTES:

1. REGENERATION COIL CAPACITY BASED ON 35 KPA (GAGE) STEAM.

REVISIONS			
1	REVISED SCHEDULES	6/98	ABC

H.S.M.M./C.C.A.

DEPARTMENT OF THE NAVY — NAVAL FACILITIES ENGINEERING COMMAND — ATLANTIC DIVISION — NAVAL STATION NORFOLK, NORFOLK, VIRGINIA

RENOVATION OF BUILDING 7433

SCHEDULES

CODE ID. NO. 05009 — SIZE D — SCALE: NONE — EFD NO. 4109 — ESR. PROJ. NO. P-671 — SPEC. NO. 0596076 — CONSTR. CONTR. NO. N62470-96-B-6076 — HVAC DRAWING NO. 4310B — SHEET 208 OF 308 — M2

XREF: NONE | PLOT SCALE: 1:1 | KMV | ACAD | REV. 0 | JU1898 | C1786 | 6076M002

ALL DIMENSIONS ARE MILLIMETERS UNLESS OTHERWISE SHOWN

NOTES THIS SHEET:

1. SEE SHEET M1 FOR LEGEND AND GENERAL NOTES.

CHILLER SCHEDULE

MARK	COOLING KW	CHILLED WATER L/S	CHILLED WATER E.W.T. (°C)	CHILLED WATER L.W.T. (°C)	CONDENSER WATER L/S	CONDENSER WATER E.W.T. (°C)	CONDENSER WATER L.W.T. (°C)	MAX PRESSURE DROP EVAPORATOR (KPA)	MAX PRESSURE DROP CONDENSER (KPA)	MAX SOUND PRESSURE LEVEL (DB REF 0.0002 MICRO BARS) OCTAVE BANDS 1	2	3	4	5	6	7	8
CH-1	1677	60.2	13.7	6.7	90.2	29.4	34.6	30	45	95	96	95	95	100	94	92	83
CH-2	668	24.0	13.7	6.7	36.0	29.4	34.7	36	51	78	70	81	88	86	81	66	56

NOTES:

1. SEE VIBRATION ISOLATOR SCHEDULE THIS SHEET.
2. SOUND PRESSURE LEVELS SHALL BE MEASURED IN ACCORDANCE WITH ARI 575 AT 100 PERCENT CAPACITY.

HVAC DUCT CONSTRUCTION SCHEDULE

SYSTEM	PRESSURE CLASS (PA)	SEAL CLASS
HIGH PRESSURE SUPPLY	1500	A
LOW PRESSURE SUPPLY	500	B
RETURN	-800	B
EXHAUST	-400	C

NOTES:

1. PRESSURE AND SEAL CLASS SHALL BE IN CONFORMANCE WITH SMACNA HVAC DUCT CONSTRUCTION STANDARDS, 1985.
2. HIGH PRESSURE SUPPLY IS DEFINED AS THE DUCTWORK BETWEEN AN AIR HANDLING UNIT AND THE TERMINAL UNITS. LOW PRESSURE SUPPLY IS THE DUCTWORK DOWNSTREAM OF THE TERMINAL UNIT.

VIBRATION ISOLATOR SCHEDULE

MARK	TYPE	MIN STATIC DEFLECTION (mm)
CT-1	SX	20
F-1A	H	20
F-1B	H	20
F-2A	H	20
F-2B	H	20
F-3A	H	20
F-3B	H	20
F-4A	H	20
F-4B	H	65
F-5	S	20
F-5A	H	20
F-5B	H	20
F-5C	H	20
F-5D	H	20
F-6	S	20
F-7	S	65
F-8	S	20
F-9	NM	10
F-10	NM	10
F-11	H	20
F-12	H	50
F-13	NM	10
CH-1	SX	50
P-1	S-I	50
P-2	S-I	50
P-3	S-I	50
P-4	S-I	50
P-5	S-I	50
P-6	S-I	50
P-7	S-I	50
ACCU-1	SX	20

NOTES:

1. TYPES ARE AS FOLLOWS:
   B-WELDED STRUCTURAL STEEL BASE
   H-SPRING ISOLATED HANGERS
   HR-THRUST RESTRAINTS
   I-CONCRETE FILLED INERTIA BASE
   NM-NEOPRENE MOUNTS
   NP-NEOPRENE PADS
   S-FLOOR SPRINGS
   SX-FLOOR SPRINGS WITH VERTICAL STOPS
   HYPHENATED DESIGNATIONS ARE COMBINATIONS OF ABOVE TYPES.
2. AIR HANDLING UNITS ARE INTERNALLY ISOLATED WITH TYPE S ISOLATORS.

PUMP SCHEDULE

MARK	TYPE	DESCRIPTION	CAPACITY (L/S)	TOTAL HEAD (KPA)	MIN MOTOR KW	RPM	VOLTS	PHASE
P-1	END SUCTION CENTRIFUGAL	CHILLED WATER	60.2	300	29.8	1750	480	3
P-2	END SUCTION CENTRIFUGAL	CONDENSER WATER	90.2	209	29.8	1750	480	3
P-3	END SUCTION CENTRIFUGAL	CHILLED/CONDENSER WATER STAND-BY	90.2	300	37.3	1750	480	3
P-4	END SUCTION CENTRIFUGAL	HEATING HOT WATER	15.6	272	7.5	1750	480	3
P-5	END SUCTION CENTRIFUGAL	HEATING HOT WATER	15.6	272	7.5	1750	480	3
P-6	END SUCTION CENTRIFUGAL	FIFTH FLOOR CHILLED WATER	24.0	360	18.7	1750	480	3
P-7	END SUCTION CENTRIFUGAL	FIFTH FLOOR CONDENSER WATER	36.0	240	14.9	1750	480	3
P-8	IN-LINE	AH-1A COIL CIRCULATION	0.88	30	0.19	1750	120	1
P-9	IN-LINE	AH-1B COIL CIRCULATION	1.15	30	0.19	1750	120	1
P-11	IN-LINE	AH-5A COIL CIRCULATION	0.14	30	0.12	1750	120	1
P-12	IN-LINE	AH-5B COIL CIRCULATION	0.43	30	0.12	1750	120	1
P-13	IN-LINE	AH-5D COIL CIRCULATION	0.26	30	0.12	1750	120	1

NOTES:

1. SEE VIBRATION ISOLATOR SCHEDULE THIS SHEET.

UNIT HEATER SCHEDULE

MARK	FAN NOM L/S	FAN MIN MOTOR KW	FAN RPM	COIL (KW)	COIL L/S	COIL RUNOUTS (mm)	MOTOR VOLTS	MOTOR PHASE
UH-1	1557	0.187	1100	33.4	0.500	25	115	1
UH-2	573	0.093	1550	9.4	0.158	20	115	1
UH-3	573	0.093	1550	9.4	0.158	20	115	1
UH-4	573	0.093	1550	9.4	0.158	20	115	1
UH-5	573	0.093	1550	9.4	0.158	20	115	1
UH-6	573	0.093	1550	9.4	0.158	20	115	1
UH-7	573	0.093	1550	9.4	0.158	20	115	1
UH-8	573	0.093	1550	9.4	0.158	20	115	1
UH-9	573	0.093	1550	9.4	0.158	20	115	1
UH-10	1557	0.187	1100	41.8	1.260	40	115	1
UH-11	132	0.030	1050	0.5	0.032	20	115	1
UH-12	132	0.030	1050	1.1	0.032	20	115	1

NOTES:

1. CAPACITIES SHALL BE BASED ON 82 °C E.W.T. AND 15 °C E.A.T.
2. SEE SHEET M38 FOR PIPING DETAILS.
3. UNIT HEATERS SHALL BE HORIZONTAL DISCHARGE TYPE. MOUNT BOTTOM OF HEATER 2440 AFF.

AIR HANDLING UNIT SOUND POWER SCHEDULE

MARK	MAX SOUND POWER LEVELS (DB REF 10^{-12} WATTS) OCTAVE BAND 1	2	3	4	5	6	7	8
AH-1A	101	100	100	95	93	86	81	74
AH-1B	102	102	99	100	97	91	82	78
AH-2A	102	100	103	95	93	87	81	76
AH-2B	102	100	103	95	93	86	81	76
AH-3A	103	101	104	97	94	88	83	77
AH-3B	102	98	100	92	88	82	76	72
AH-4A	102	98	99	92	87	81	76	71
AH-4B	102	98	98	91	86	81	75	70
AH-5A	99	97	93	96	93	88	82	79
AH-5B	101	99	103	95	92	86	81	75
AH-5C	101	102	98	100	97	91	82	77
AH-5D	101	100	100	95	93	86	81	74

NOTES:

1. SOUND POWER LEVELS SHALL BE MEASURED AT FAN DISCHARGE FOR ALL FANS.

WALL FIN SCHEDULE

MARK	CAPACITY (KW)	L/S	ELEMENT LENGTH (mm)	RUNOUTS (mm)
WF-1	1	0.03	910	20
WF-2	1	0.03	910	20
WF-3	1	0.03	910	20
WF-4	1	0.03	910	20
WF-5	1	0.03	910	20

NOTES:

1. CAPACITIES SHALL BE BASED ON 83°C E.W.T. AND 20°C E.A.T. WATER PRESSURE DROP SHALL NOT EXCEED 15 KPA.
2. SEE SHEET M39 FOR PIPING DETAILS.
3. BOTTOM OF WALL FIN SHALL BE LOCATED 152 A.F.F
4. WALL FIN ENCLOSURES SHALL BE AS SPECIFIED. ENCLOSURE SHALL HAVE A 305 LONG ACCESS SECTION ON EACH END.

AIR-COOLED CONDENSING UNIT SCHEDULE

MARK	CAPACITY KW	SUCTION TEMPERATURE (°C)	HEAD PRESSURE KPA (GAGE)
ACCU-1	61	7.2	2048

NOTES:

1. ELECTRICAL POWER REQUIREMENT AT FULL LOAD SHALL NOT EXCEED 25 KW.
2. SEE VIBRATION ISOLATOR SCHEDULE THIS SHEET.
3. ELECTRICAL SERVICE SHALL BE 480 V/ 60 HZ / 3 PH
4. CAPACITY SHALL BE BASED ON AN OUTDOOR AMBIENT TEMPERATURE OF 35 °C.

COOLING TOWER SCHEDULE

MARK	L/S	MIN FAN MOTOR KW	RPM	VOLTS	PHASE	NEMA STARTER SIZE	SUMMER CAPACITY E.W.T. (°C)	SUMMER CAPACITY L.W.T. (°C)	SUMMER CAPACITY ENTERING AIR WET BULB (°C)	MAX STATIC LIFT (KPA)
CT-1	90.2	11.2	500	480	3	2	35	29.4	25.6	36
CT-2	36.0	7.5	500	480	3	1	35	29.4	25.6	36

NOTES:

1. UNITS SHALL HAVE TWO SPEED FANS.
2. CT-1 SHALL BE TWO CELL. FAN MOTOR KW IS FOR EACH OF TWO FANS.
3. PROVIDE 7 KW BASIN HEATER FOR EACH CELL.

CONVERTER SCHEDULE

MARK	L/S	E.W.T. (°C)	L.W.T. (°C)	MAX WTR PD (KPA)
C-1	31.3	65.5	82.3	10.5

NOTES:

1. SELECTION SHALL BE BASED ON A FOULING FACTOR OF 0.000088m² °C/W AND A STEAM PRESSURE OF 15 KPA GAUGE.

REVISIONS

DATE	BY	DESCRIPTION
5/98	ABC	REVISED SCHEDULES

DEPARTMENT OF THE NAVY — NAVAL FACILITIES ENGINEERING COMMAND, NORFOLK, VIRGINIA
NAVAL STATION NAVBASE NORFOLK — ATLANTIC DIVISION, NORFOLK, VA

RENOVATION OF BUILDING Z133

SCHEDULES

H.S.M.M./C.C.A. — HUNTER SMITH MARTIN & MORROW, INC. / CROXTON COLLABORATIVE, ARCHITECTS — ARCHITECTS • ENGINEERS • PLANNERS • INTERIOR DESIGNERS

CODE ID. NO. 81091 | SIZE D
SCALE: NONE
EFD NO. 47097
STA. PROJ. NO. P-871
SPEC. NO. 0596076
CONSTR. CONTR. NO. N62470-96-B-6076
NAVFAC DRAWING NO. 437097
SHEET 201 OF 208
M3

XREF: NONE | PLOT SCALE: 1:1 | ACAD MDR | REV. 1 | JU0298 | C1786 | 6076M003

TERMINAL UNIT SCHEDULE

MARK	TYPE	MIN INLET DIA (mm)	MAX L/S	MIN L/S	HOT WATER COIL CAPACITY (KW)	HOT WATER COIL L/S	HOT WATER COIL RUNOUT (mm)
TU-1A01	VVH	130	85	26	0.54	0.03	20
TU-1A02	VVH	130	61	28	0.59	0.03	20
TU-1A03	VVH	250	503	250	5.18	0.08	20
TU-1A04	VVH	250	363	184	3.81	0.06	20
TU-1A05	CVH	150	156	156	3.22	0.04	20
TU-1A06	VVH	150	132	40	0.83	0.03	20
TU-1A07	VVH	360	965	481	9.96	0.15	20
TU-1A08	VVH	150	151	47	0.98	0.03	20
TU-1A09	NOT	USED					
TU-1A10	VVH	300	642	193	4.00	0.06	20
TU-1A11	VVH	130	90	28	0.78	0.03	20
TU-1A12	CVH	300	585	585	12.07	0.17	20
TU-1A13	VVH	130	85	42	1.37	0.03	20
TU-1A14	VVH	130	113	33	0.68	0.03	20
TU-1A15	CVH	200	293	293	6.10	0.10	20
TU-1A16	VVH	130	118	35	0.73	0.03	20
TU-1A17	VVH	130	113	33	1.13	0.03	20
TU-1A18	VVH	300	519	260	5.37	0.08	20
TU-1A19	VVH	300	519	260	5.37	0.08	20
TU-1A20	VVH	360	642	321	6.64	0.10	20
TU-1A21	VVH	130	38	12	0.24	0.03	20
TU-1A22	CVH	250	373	373	7.72	0.10	20
TU-1A23	VVH	250	406	203	5.79	0.08	20
TU-1A24	VVH	300	609	304	8.69	0.13	20
TU-1A25	CVH	250	330	330	6.83	0.10	20
TU-1A26	VVH	130	127	38	0.78	0.03	20
TU-1A27	CVH	200	236	236	8.50	0.12	20
TU-1A28	VVH	130	52	17	0.34	0.03	20
TU-1A29	CVH	200	293	283	6.06	0.09	20
TU-1A30	VVH	130	127	66	1.37	0.03	20
TU-1A31	VVH	150	104	52	1.07	0.03	20
TU-1A32	VVH	150	170	52	1.07	0.03	20
TU-1A33	VVH	200	297	297	6.15	0.09	20
TU-1A34	VVH	150	170	85	1.75	0.03	20
TU-1B01	VVH	200	260	78	1.63	0.03	20
TU-1B02	VVH	130	118	35	0.74	0.03	20
TU-1B03	VVH	250	363	182	3.80	0.06	20
TU-1B04	VVH	250	434	130	2.71	0.04	20
TU-1B05	VVH	300	623	311	6.51	0.10	20
TU-1B06	VVH	300	696	210	4.39	0.06	20
TU-1B07	VVH	360	750	375	7.84	0.11	20
TU-1B08	VVH	300	696	347	7.25	0.10	20
TU-1B09	VVH	360	741	222	4.64	0.07	20
TU-1B10	VVH	300	670	201	4.19	0.06	20
TU-1B11	VVH	360	741	370	7.74	0.11	20
TU-1B12	VVH	300	590	179	3.75	0.06	20
TU-1B13	VVH	200	203	80	1.68	0.03	20
TU-1B14	VVH	250	448	227	4.73	0.07	20
TU-2A01	VVH	250	500	250	6.58	0.10	20
TU-2A02	VVH	300	557	278	7.32	0.11	20
TU-2A03	CVH	250	514	514	13.50	0.20	20
TU-2A04	VVH	250	359	109	2.85	0.04	20

MARK	TYPE	MIN INLET DIA (mm)	MAX L/S	MIN L/S	HOT WATER COIL CAPACITY (KW)	HOT WATER COIL L/S	HOT WATER COIL RUNOUT (mm)
TU-2A05	CVH	250	330	330	8.70	0.13	20
TU-2A06	VVH	250	500	250	6.57	0.10	20
TU-2A07	VVH	250	344	127	3.35	0.05	20
TU-2A08	VVH	250	344	127	3.35	0.05	20
TU-2A09	VVH	250	500	250	6.58	0.10	20
TU-2A10	VVH	250	344	127	3.35	0.05	20
TU-2A11	VVH	130	94	28	0.75	0.03	20
TU-2A12	VVH	200	472	142	3.72	0.05	20
TU-2A13	VVH	200	495	248	6.51	0.10	20
TU-2A14	VVH	250	368	184	4.84	0.07	20
TU-2A15	VVH	150	156	47	1.24	0.03	20
TU-2A16	VVH	200	278	139	3.66	0.05	20
TU-2A17	CVH	200	297	297	7.79	0.10	20
TU-2A18	VVH	250	344	127	3.35	0.05	20
TU-2A19	VVH	250	500	250	6.58	0.10	20
TU-2A20	VVH	250	326	163	4.28	0.06	20
TU-2A21	VVH	250	344	127	3.35	0.05	20
TU-2A22	VVH	250	467	234	6.14	0.09	20
TU-2A23	VVH	200	311	156	4.10	0.06	20
TU-2A24	VVH	250	363	182	4.78	0.07	20
TU-2A25	VVH	130	61	28	0.75	0.03	20
TU-2A26	VVH	150	274	137	3.60	0.05	20
TU-2A27	VVH	250	326	163	4.28	0.06	20
TU-2A28	VVH	250	500	250	6.58	0.10	20
TU-2A29	VVH	250	472	236	6.20	0.09	20
TU-2A30	VVH	200	316	158	4.16	0.06	20
TU-2A31	VVH	250	359	127	3.35	0.05	20
TU-2A32	CVH	130	76	76	2.04	0.08	20
TU-2A33	VVH	250	500	250	6.58	0.10	20
TU-2A34	VVH	250	326	163	4.28	0.06	20
TU-2A35	VVH	250	344	127	3.35	0.05	20
TU-2A36	VVH	130	61	28	0.75	0.03	20
TU-2A37	VVH	130	99	31	0.81	0.03	20
TU-2B01	CVH	200	297	297	7.16	0.10	20
TU-2B02	VVH	250	500	250	6.05	0.09	20
TU-2B03	VVH	250	344	127	3.08	0.04	20
TU-2B04	VVH	130	94	28	0.69	0.03	20
TU-2B05	VVH	150	184	57	1.37	0.03	20
TU-2B06	VVH	200	316	94	2.28	0.03	20
TU-2B07	VVH	250	514	257	6.22	0.09	20
TU-2B08	VVH	250	396	198	4.79	0.07	20
TU-2B09	VVH	130	61	31	0.74	0.03	20
TU-2B10	VVH	200	217	80	1.94	0.03	20
TU-2B11	VVH	200	193	97	2.34	0.03	20
TU-2B12	VVH	200	189	94	2.28	0.03	20
TU-2B13	VVH	250	344	127	3.08	0.04	20
TU-2B14	VVH	250	500	250	6.05	0.09	20
TU-2B15	VVH	300	557	278	6.73	0.10	20
TU-2B16	VVH	250	359	127	3.08	0.04	20
TU-2B17	CVH	200	467	467	11.25	0.16	20
TU-2B18	VVH	250	500	250	6.05	0.09	20
TU-2B19	VVH	250	344	127	3.08	0.04	20
TU-2B20	VVH	200	193	80	1.94	0.03	20
TU-2B21	CVH	200	297	297	7.16	0.10	20

MARK	TYPE	MIN INLET DIA (mm)	MAX L/S	MIN L/S	HOT WATER COIL CAPACITY (KW)	HOT WATER COIL L/S	HOT WATER COIL RUNOUT (mm)
TU-2B22	VVH	250	326	163	3.94	0.06	20
TU-2B23	VVH	250	472	236	5.70	0.08	20
TU-2B24	VVH	200	316	158	3.82	0.06	20
TU-2B25	VVH	250	359	127	3.08	0.04	20
TU-2B26	CVH	130	76	76	1.87	0.08	20
TU-2B27	VVH	250	500	250	6.05	0.09	20
TU-2B28	VVH	150	151	47	1.14	0.03	20
TU-2B29	VVH	250	326	163	3.94	0.06	20
TU-2B30	VVH	250	344	127	3.08	0.04	20
TU-2B31	CVH	130	123	123	2.95	0.10	20
TU-2B32	VVH	250	344	127	3.08	0.04	20
TU-2B33	VVH	250	500	250	6.05	0.09	20
TU-2B34	VVH	250	500	250	6.05	0.09	20
TU-2B35	VVH	250	326	163	3.94	0.06	20
TU-2B36	VVH	250	344	127	3.08	0.04	20
TU-2B37	VVH	130	94	28	0.69	0.03	20
TU-2B38	VVH	150	184	57	1.37	0.03	20
TU-2B39	VVH	250	472	236	5.71	0.08	20
TU-2B40	VVH	250	378	189	4.56	0.06	20
TU-2B41	VVH	200	208	80	1.94	0.03	20
TU-2B42	VVH	130	61	31	0.74	0.03	20
TU-2B43	VVH	130	66	28	0.69	0.03	20
TU-3A01	VVH	200	307	156	3.86	0.06	20
TU-3A02	VVH	250	458	231	5.73	0.08	20
TU-3A03	VVH	250	448	227	5.62	0.08	20
TU-3A04	VVH	200	297	151	3.75	0.05	20
TU-3A05	VVH	250	368	160	3.98	0.06	20
TU-3A06	VVH	250	434	132	3.28	0.05	20
TU-3A07	VVH	250	458	231	5.73	0.08	20
TU-3A08	VVH	200	307	156	3.86	0.06	20
TU-3A09	VVH	250	359	151	3.75	0.05	20
TU-3A10	VVH	130	66	33	0.82	0.03	20
TU-3A11	VVH	250	349	151	3.75	0.05	20
TU-3A12	CVH	200	274	274	6.79	0.10	20
TU-3A13	VVH	250	458	231	5.73	0.08	20
TU-3A14	VVH	200	307	156	3.86	0.06	20
TU-3A15	VVH	250	387	151	3.75	0.05	20
TU-3A16	VVH	250	434	217	5.38	0.08	20
TU-3A17	VVH	200	288	142	3.51	0.05	20
TU-3A18	VVH	250	387	118	2.93	0.04	20
TU-3A19	CVH	200	297	297	7.37	0.11	20
TU-3A20	VVH	300	647	326	8.08	0.12	20
TU-3A21	VVH	250	429	127	3.16	0.05	20
TU-3A22	VVH	250	467	208	5.15	0.07	20
TU-3A23	CVH	200	288	288	7.14	0.10	20
TU-3A24	VVH	300	538	297	7.37	0.11	20
TU-3A25	VVH	250	467	236	5.85	0.08	20
TU-3A26	VVH	250	467	236	5.85	0.08	20
TU-3A27	VVH	300	585	297	7.37	0.11	20
TU-3A28	CVH	300	585	297	7.37	0.11	20
TU-3A29	VVH	250	354	354	8.78	0.13	20
TU-3A30	VVH	250	467	236	5.85	0.08	20
TU-3A31	VVH	200	269	137	3.39	0.05	20
TU-3A32	VVH	250	330	165	4.10	0.06	20

NOTES:

1. HOT WATER COIL CAPACITIES SHALL BE BASED ON E.A.T. AS SHOWN AT END OF SCHEDULE, SHEET M6, AND 83°C E.W.T. WITH A 11°C TEMPERATURE DROP. COILS SHALL ALSO HAVE CAPACITY TO REHEAT THE MINIMUM AIRFLOW TO 22°C FROM THE AHU COOLING COIL L.A.T. WITH 44°C E.W.T.
2. WATER PRESSURE DROP SHALL NOT EXCEED 45 KPA.
3. TERMINAL UNIT TYPES ARE AS FOLLOWS: TYPE VV SHALL BE THROTTLING VARIABLE VOLUME: TYPE VVH SHALL BE VARIABLE VOLUME WITH HOT WATER COIL: TYPE CVH SHALL BE CONSTANT VOLUME WITH HOT WATER COIL.
4. MINIMUM INLET STATIC PRESSURE DROP AT THE INDICATED MAX L/S SHALL NOT EXCEED 125 PA.
5. SEE SHEET M38 FOR PIPING DETAIL.

ALL DIMENSIONS ARE MILLIMETERS UNLESS OTHERWISE SHOWN

NOTES THIS SHEET:

1. SEE SHEET M1 FOR LEGEND AND GENERAL NOTES.

REVISIONS: 1 REVISED SCHEDULE 6/98 ABC

H.S.M.M./C.C.A. HAYES, SEAY, MATTERN & MATTERN, INC./ CROXTON COLLABORATIVE ARCHITECTS

DEPARTMENT OF THE NAVY — NAVAL FACILITIES ENGINEERING COMMAND — ATLANTIC DIVISION — NORFOLK, VIRGINIA

NAVAL STATION NAVBASE NORFOLK NORFOLK, VA

RENOVATION OF BUILDING Z133

SCHEDULES

CODE ID. NO. 80091 SIZE D
SCALE: NONE
EFD NO. 471098
STA. PROJ. NO. P-871
SPEC. NO. 05966076
CONSTR. CONTR. NO. N62470-96-B-6075
NAVFAC DRAWING NO. 4371098
SHEET 202 OF 308

M4

6076M004 C1786 JU1798 REV. 0 ACAD KMV PLOT SCALE: 1:1 XREF: NONE

TERMINAL UNIT SCHEDULE

MARK	TYPE	MIN INLET DIA (mm)	MAX L/S	MIN L/S	HOT WATER COIL CAPACITY (KW)	HOT WATER COIL L/S	HOT WATER COIL RUNOUT (mm)
TU-3A33	VVH	150	132	66	1.64	0.03	20
TU-3A34	VVH	130	94	47	1.17	0.03	20
TU-3A35	VVH	130	94	47	1.17	0.03	20
TU-3A36	VVH	130	57	28	0.70	0.03	20
TU-3A37	VVH	150	137	71	1.77	0.03	20
TU-3B01	VVH	250	344	170	3.76	0.05	20
TU-3B02	VVH	250	373	184	4.07	0.06	20
TU-3B03	VVH	250	477	137	3.03	0.04	20
TU-3B04	CVH	250	335	335	7.42	0.11	20
TU-3B05	VVH	300	519	260	5.75	0.08	20
TU-3B06	VVH	300	519	260	5.75	0.08	20
TU-3B07	VVH	250	335	99	2.19	0.03	20
TU-3B08	VVH	130	80	33	0.73	0.03	20
TU-3B09	CVH	200	250	250	5.54	0.08	20
TU-3B10	VVH	250	354	175	3.87	0.06	20
TU-3B11	VVH	150	127	66	1.46	0.03	20
TU-3B12	VVH	130	90	42	0.94	0.03	20
TU-3B13	VVH	130	90	42	0.94	0.03	20
TU-3B14	VVH	130	94	38	0.84	0.03	20
TU-3B15	VVH	200	278	142	3.13	0.04	20
TU-3B16	VVH	250	477	137	3.03	0.04	20
TU-3B17	VVH	300	519	260	5.75	0.08	20
TU-3B18	VVH	250	382	208	4.60	0.07	20
TU-3B19	VVH	150	170	85	1.88	0.03	20
TU-3B20	VVH	250	458	227	5.01	0.07	20
TU-3B21	VVH	200	307	151	3.34	0.05	20
TU-3B22	VVH	250	330	109	2.40	0.03	20
TU-3B23	VVH	200	193	71	1.57	0.03	20
TU-3B24	CVH	130	85	85	1.88	0.03	20
TU-3B25	CVH	200	274	274	6.06	0.09	20
TU-3B26	VVH	300	585	293	6.48	0.09	20
TU-3B27	VVH	200	241	66	1.46	0.03	20
TU-3B28	VVH	200	293	99	2.19	0.03	20
TU-3B29	CVH	200	307	307	6.79	0.10	20
TU-3B30	CVH	200	307	307	6.79	0.10	20
TU-3B31	VVH	150	137	71	1.57	0.03	20
TU-3B32	VVH	150	137	71	1.57	0.03	20
TU-3B33	VVH	200	208	80	1.78	0.03	20
TU-3B34	CVH	250	354	354	7.83	0.11	20
TU-3B35	CVH	200	250	250	5.54	0.08	20
TU-3B36	VVH	150	127	66	1.46	0.03	20
TU-3B37	VVH	130	90	47	1.04	0.03	20
TU-3B38	VVH	130	90	47	1.04	0.03	20
TU-3B39	VVH	200	227	118	2.61	0.04	20
TU-3B40	VVH	250	467	132	2.92	0.04	20
TU-3B41	VVH	300	647	321	7.10	0.10	20
TU-3B42	VVH	250	472	137	3.03	0.04	20
TU-3B43	VVH	300	529	236	5.22	0.07	20
TU-3B44	VVH	300	585	293	6.48	0.09	20
TU-3B45	VVH	250	472	132	2.92	0.04	20
TU-3B46	VVH	130	118	38	0.84	0.03	20
TU-3B47	CVH	200	283	283	6.27	0.09	20

MARK	TYPE	MIN INLET DIA (mm)	MAX L/S	MIN L/S	HOT WATER COIL CAPACITY (KW)	HOT WATER COIL L/S	HOT WATER COIL RUNOUT (mm)
TU-4A01	VVH	250	514	260	6.42	0.09	20
TU-4A02	VVH	250	467	212	5.25	0.08	20
TU-4A03	VVH	250	340	170	4.20	0.06	20
TU-4A04	VVH	250	354	179	4.44	0.06	20
TU-4A05	VVH	250	467	212	5.25	0.08	20
TU-4A06	VVH	130	66	33	0.82	0.03	20
TU-4A07	VVH	300	529	264	6.54	0.09	20
TU-4A08	VVH	250	467	212	5.25	0.08	20
TU-4A09	CVH	200	274	274	6.77	0.10	20
TU-4A10	VVH	250	354	179	4.44	0.06	20
TU-4A11	VVH	300	529	264	6.54	0.09	20
TU-4A12	VVH	300	529	264	6.54	0.09	20
TU-4A13	VVH	250	354	179	4.44	0.06	20
TU-4A14	VVH	250	467	212	5.25	0.08	20
TU-4A15	VVH	250	500	250	6.19	0.09	20
TU-4A16	VVH	200	241	109	2.68	0.04	20
TU-4A17	VVH	150	132	66	1.63	0.03	20
TU-4A18	VVH	130	94	47	1.17	0.03	20
TU-4A19	VVH	130	94	47	1.17	0.03	20
TU-4A20	VVH	130	94	28	2.33	0.03	20
TU-4A21	VVH	200	326	98	8.05	0.12	20
TU-4A22	VVH	300	647	326	8.05	0.12	20
TU-4A23	VVH	250	467	212	5.25	0.08	20
TU-4A24	VVH	250	434	236	5.84	0.08	20
TU-4A25	CVH	200	278	278	6.89	0.10	20
TU-4A26	VVH	250	467	212	5.25	0.08	20
TU-4A27	VVH	300	543	274	6.77	0.10	20
TU-4A28	VVH	250	467	212	5.25	0.08	20
TU-4A29	VVH	300	585	293	7.24	0.10	20
TU-4A30	VVH	300	585	293	7.24	0.10	20
TU-4A31	VVH	250	467	212	5.25	0.08	20
TU-4A32	CVH	250	392	392	9.69	0.14	20
TU-4A33	VVH	250	359	179	4.44	0.06	20
TU-4A34	VVH	200	241	104	2.57	0.04	20
TU-4A35	VVH	150	132	66	1.63	0.03	20
TU-4A36	VVH	130	94	47	1.17	0.03	20
TU-4A37	VVH	130	94	47	1.17	0.03	20
TU-4A38	VVH	130	57	28	0.70	0.03	20
TU-4A39	VVH	150	142	71	1.83	0.03	20
TU-4A40	VVH	250	429	236	5.84	0.08	20
TU-4B01	VVH	250	467	156	3.82	0.05	20
TU-4B02	VVH	250	354	179	4.40	0.06	20
TU-4B03	VVH	300	529	264	6.48	0.09	20
TU-4B04	VVH	300	529	264	6.48	0.09	20
TU-4B05	VVH	250	354	179	4.40	0.06	20
TU-4B06	VVH	250	467	156	3.82	0.05	20
TU-4B07	VVH	250	472	236	5.79	0.08	20
TU-4B08	VVH	200	269	137	3.36	0.05	20
TU-4B09	VVH	130	127	66	1.62	0.03	20
TU-4B10	VVH	130	90	47	1.16	0.03	20
TU-4B11	VVH	130	90	47	1.16	0.03	20
TU-4B12	VVH	130	61	33	0.81	0.03	20
TU-4B13	VVH	200	269	137	3.36	0.05	20

MARK	TYPE	MIN INLET DIA (mm)	MAX L/S	MIN L/S	HOT WATER COIL CAPACITY (KW)	HOT WATER COIL L/S	HOT WATER COIL RUNOUT (mm)
TU-4B14	VVH	250	514	260	6.37	0.09	20
TU-4B15	VVH	250	467	156	3.82	0.05	20
TU-4B16	VVH	250	340	170	4.17	0.06	20
TU-4B17	VVH	250	354	179	4.40	0.06	20
TU-4B18	VVH	250	467	156	3.82	0.05	20
TU-4B19	CVH	250	387	387	9.49	0.14	20
TU-4B20	VVH	300	529	264	6.48	0.09	20
TU-4B21	VVH	250	467	189	4.63	0.07	20
TU-4B22	CVH	200	274	274	6.71	0.10	20
TU-4B23	VVH	300	585	293	7.18	0.10	20
TU-4B24	CVH	250	392	392	9.61	0.14	20
TU-4B25	VVH	300	585	293	7.18	0.10	20
TU-4B26	VVH	250	467	189	4.63	0.07	20
TU-4B27	VVH	250	330	165	4.05	0.06	20
TU-4B28	VVH	200	269	132	3.24	0.05	20
TU-4B29	VVH	130	127	66	1.62	0.03	20
TU-4B30	VVH	130	90	47	1.16	0.03	20
TU-4B31	VVH	130	90	47	1.16	0.03	25
TU-4B32	VVH	130	61	33	0.81	0.03	20
TU-4B33	VVH	150	146	76	1.88	0.03	20
TU-4B34	VVH	300	529	278	6.83	0.10	20
TU-4B35	VVH	250	467	231	5.67	0.08	20
TU-4B36	VVH	300	647	344	8.45	0.12	20
TU-4B37	VVH	130	118	47	1.16	0.03	20
TU-4B38	CVH	200	283	283	6.94	0.10	20
TU-4B39	VVH	250	467	189	4.63	0.07	20
TU-4B40	VVH	300	585	293	7.18	0.10	20
TU-4B41	CVH	130	85	85	2.08	0.03	20
TU-5A01	VVH	300	708	708	14.26	0.20	20
TU-5A02	VVH	360	793	793	15.97	0.23	20
TU-5A03	VVH	300	595	595	11.98	0.17	20
TU-5A04	VVH	360	859	859	17.30	0.25	20
TU-5B01	VVH	300	580	290	6.35	0.09	20
TU-5B02	VVH	130	94	47	0.95	0.03	20
TU-5B03	VVH	250	401	198	3.99	0.06	20
TU-5B04	VVH	130	94	47	0.95	0.03	20
TU-5B05	VVH	250	472	236	5.56	0.08	20
TU-5B06	VVH	130	90	45	0.90	0.03	20
TU-5B07	VVH	200	203	101	2.04	0.03	20
TU-5B08	VVH	200	255	127	3.99	0.06	20
TU-5B09	VVH	250	477	238	4.80	0.07	20
TU-5B10	VVH	250	472	236	5.10	0.08	20
TU-5B11	VVH	360	849	425	8.56	0.12	20
TU-5B12	VVH	300	689	344	6.94	0.10	20
TU-5B13	VVH	300	698	349	7.29	0.11	20
TU-5B14	VVH	250	444	222	4.47	0.06	20
TU-5B15	VVH	200	288	144	3.80	0.06	20
TU-5B16	VVH	300	731	366	7.37	0.11	20
TU-5B17	VVH	300	613	307	6.18	0.09	20
TU-5B18	VVH	300	697	349	7.05	0.10	20

NOTES:

1. HOT WATER COIL CAPACITIES SHALL BE BASED ON E.A.T. AS SHOWN AT END OF SCHEDULE, SHEET M6, AND 83°C E.W.T. WITH A 11°C TEMPERATURE DROP. COILS SHALL ALSO HAVE CAPACITY TO REHEAT THE MINIMUM AIRFLOW TO 22°C FROM THE AHU COOLING COIL L.A.T. WITH 44°C E.W.T.
2. WATER PRESSURE DROP SHALL NOT EXCEED 45 KPA.
3. TERMINAL UNIT TYPES ARE AS FOLLOWS: TYPE VV SHALL BE THROTTLING VARIABLE VOLUME: TYPE VVH SHALL BE VARIABLE VOLUME WITH HOT WATER COIL: TYPE CVH SHALL BE CONSTANT VOLUME WITH HOT WATER COIL.
4. MINIMUM INLET STATIC PRESSURE DROP AT THE INDICATED MAX L/S SHALL NOT EXCEED 125 PA.
5. SEE SHEET M38 FOR PIPING DETAIL.

ALL DIMENSIONS ARE MILLIMETERS UNLESS OTHERWISE SHOWN

NOTES THIS SHEET:

1. SEE SHEET M1 FOR LEGEND AND GENERAL NOTES.

REVISIONS: 1 — REVISED SCHEDULE — 6/98 — ABC

H.S.M.M./C.C.A.

DEPARTMENT OF THE NAVY — NAVAL FACILITIES ENGINEERING COMMAND — ATLANTIC DIVISION — NORFOLK, VIRGINIA

NAVAL STATION — NAVBASE NORFOLK — NORFOLK, VA

RENOVATION OF BUILDING 7133

SCHEDULES

CODE ID. NO. 80091 — SIZE D — SCALE: NONE — EFD NO. 471099 — STA. PROJ. NO. P-?71 — SPEC. NO. 0596?076 — CONSTR. CONTR. NO. N62470-96-?-6076 — NAVFAC DRAWING NO. 4371099 — SHEET 203 OF 308

M5

6076M005 C1786 JU1898 REV. 0 ACAD KMV PLOT SCALE: 1:1 XREF: NONE

ALL DIMENSIONS ARE MILLIMETERS UNLESS OTHERWISE SHOWN

NOTES THIS SHEET:

1. SEE SHEET M1 FOR LEGEND AND GENERAL NOTES.

SOUND ATTENUATOR SCHEDULE

MARK	TYPE	L/S	MAX PD (PA)	DIMENSIONS LG	DIMENSIONS WD	DIMENSIONS HGT	ATTENUATOR DUCT DIAMETER	BODY DIAMETER	MIN DYNAMIC INSERTION LOSS (DB REF 10^-12 WATTS) OCTAVE BAND 1	2	3	4	5	6	7	8	FLOW DIRECTION	MAX SELF-NOISE POWER LEVELS (DB REF 10^-12 WATTS) OCTAVE BAND 1	2	3	4	5	6	7	8
SA-1AS	CIRCULAR	7797	44.9	1520	–	–	760	1170	7	13	22	30	28	25	20	16	FORWARD	69	65	64	64	64	62	61	54
SA-1BS	CIRCULAR	6423	39.9	1420	–	–	710	1120	7	13	22	30	28	25	20	16	FORWARD	69	65	64	64	64	62	61	54
SA-2AS	CIRCULAR	10993	42.4	1830	–	–	910	1320	7	13	22	30	28	25	20	16	FORWARD	69	65	64	64	64	62	61	54
SA-2BS	CIRCULAR	11342	44.8	1830	–	–	910	1320	7	13	22	30	28	25	20	16	FORWARD	69	65	64	64	64	62	61	54
SA-3AS	CIRCULAR	11127	27.4	2030	–	–	1020	1420	7	13	22	30	28	25	20	16	FORWARD	69	65	64	64	64	62	61	54
SA-3BS	CIRCULAR	12227	52.3	1830	–	–	910	1320	7	13	22	30	28	25	20	16	FORWARD	69	65	64	64	64	62	61	54
SA-4AS	CIRCULAR	11878	49.8	1830	–	–	910	1320	7	13	22	30	28	25	20	16	FORWARD	69	65	64	64	64	62	61	54
SA-4BS	CIRCULAR	12071	32.4	2030	–	–	1020	1420	7	13	22	30	28	25	20	16	FORWARD	70	66	65	65	65	63	62	55
SA-5AS	CIRCULAR	2690	24.9	1120	–	–	560	970	6	12	20	24	32	25	21	17	FORWARD	65	61	60	60	60	58	57	50
SA-5BS	CIRCULAR	10421	37.4	1830	–	–	910	1320	7	13	22	30	28	25	20	16	FORWARD	71	67	66	66	66	64	63	56
SA-5CS	CIRCULAR	4493	44.8	1220	–	–	610	1020	6	12	20	24	32	25	21	17	FORWARD	66	62	61	61	61	59	58	51
SA-5DS	CIRCULAR	7773	44.8	1520	–	–	760	1170	6	12	20	24	32	25	21	17	FORWARD	68	64	63	63	63	61	60	53
SA-1AR	RECTANGULAR	4661	34.9	1520	1220	910	–	–	10	13	24	29	28	17	13	13	REVERSE	51	46	49	51	53	52	43	33
SA-1BR	RECTANGULAR	6036	39.9	1520	1520	910	–	–	10	13	24	29	28	17	13	13	REVERSE	51	46	49	51	53	52	43	33
SA-2AR	RECTANGULAR	8946	52.4	1520	1520	1220	–	–	10	13	24	29	28	17	13	13	REVERSE	53	48	51	53	55	54	45	35
SA-2BR	RECTANGULAR	9449	52.4	1520	1520	1220	–	–	10	13	24	29	28	17	13	13	REVERSE	53	48	51	53	55	54	45	35
SA-3AR	RECTANGULAR	9261	34.9	1520	1830	1220	–	–	10	13	24	29	28	17	13	13	REVERSE	54	49	52	54	56	55	48	36
SA-3BR	RECTANGULAR	10087	57.3	1520	1520	1220	–	–	10	13	24	29	28	17	13	13	REVERSE	53	48	51	53	55	54	45	35
SA-4AR	RECTANGULAR	9945	39.8	1520	1830	1220	–	–	10	13	24	29	28	17	13	13	REVERSE	54	49	52	54	56	55	48	36
SA-4BR	RECTANGULAR	9888	39.8	1520	1830	1220			10	13	24	29	28	17	13	13	REVERSE	54	49	52	54	56	55	48	36
SA-5AR	RECTANGULAR	2548	15.0	1520	1220	760	–	–	12	15	27	31	30	17	14	13	REVERSE	51	46	49	51	53	52	42	33
SA-5BR	RECTANGULAR	9091	44.8	910	1520	1220	–	–	7	8	17	20	18	13	11	11	REVERSE	44	49	52	54	56	55	46	36
SA-5CR	RECTANGULAR	4450	12.5	910	1520	1220	–	–	7	8	17	20	18	13	11	11	REVERSE	54	49	52	54	56	55	46	36
SA-5DR	RECTANGULAR	6193	22.4	1520	1520	1220	–	–	12	15	27	31	30	17	14	13	REVERSE	54	49	52	54	56	55	46	36

NOTES:

1. PRESSURE DROPS SCHEDULED APPLY TO SILENCERS INSTALLED WITH LONG STRAIGHT RUNS OF DUCT ATTACHED TO INLET AND OUTLET OF SILENCERS.
2. DYNAMIC INSERTION LOSS BASED ON +20.3 M/S FPM FOR FORWARD FLOW ON CIRCULAR TYPE SOUND ATTENUATORS. DYNAMIC INSERTION LOSS BASED ON -5.1 M/S ON RECTANGULAR TYPE SOUND ATTENUATORS.
3. SELF-NOISE POWER LEVELS BASED ON +20.3 M/S FOR FORWARD FLOW ON CIRCULAR TYPE SOUND ATTENUATORS. DYNAMIC INSERTION LOSS BASED ON -5.1 M/S FOR REVERSE FLOW ON RECTANGULAR TYPE SOUND ATTENUATOR.

SPLIT-SYSTEM AIR CONDITIONING UNIT SCHEDULE

MARK	FAN SECTION L/S	FAN SECTION MIN MOTOR KW	EXTERNAL SP (PA)	COOLING COIL CAPACITY SENSIBLE (KW)	COOLING COIL CAPACITY TOTAL (KW)	COOLING COIL E.A.T. (°C) DB	COOLING COIL E.A.T. (°C) WB	ELECTRICAL VOLTS	ELECTRICAL PHASE
AC-1	660	0.56	100	10.5	14	25.6	18.3	480	3
AC-2	660	0.56	112	13.2	17.6	25.1	18.3	480	3
AC-3	660	0.56	100	10.5	14	25.6	18.3	480	3

NOTES:

1. CAPACITY BASED ON INDOOR AND OUTDOOR UNITS OPERATING TOGETHER WITH AN OUTSIDE AMBIENT AIR TEMPERATURE OF 35°C.
2. REFRIGERANT PIPING BETWEEN THE INDOOR AND OUTDOOR UNIT SHALL BE SIZED BY AC-UNIT MANUFACTURER. ALL VALVES AND FITTINGS REQUIRED TO COMPLY WITH AC-UNIT MANUFACTURERS INSTALLATION INSTRUCTIONS SHALL BE PROVIDED.
3. EXTERNAL STATIC PRESSURE DOES NOT INCLUDE COILS, FILTERS, OR CASING LOSSES.
4. UNIT SHALL HAVE A MINIMUM SEER OF 10.

CABINET UNIT HEATER SCHEDULE

MARK	COIL CAPACITY (KW)	COIL L/S	COIL RUNOUTS (mm)	FAN L/S	FAN MIN MOTOR KW
CUH-1	1.5	0.03	20	104	0.02
CUH-2	1.5	0.03	20	104	0.02
CUH-3	1.5	0.03	20	104	0.02

NOTES:

1. CAPACITIES SHALL BE BASED ON 83°C E.W.T AND 21°C E.A.T. WATER PRESSURE DROP SHALL NOT EXCEED 30 KPA.
2. SEE SHEET M38 FOR PIPING DETAILS.

COMPUTER ROOM AIR CONDITIONING UNIT SCHEDULE

MARK	FAN SECTION L/S	FAN SECTION MIN MOTOR KW	COOLING COIL SENSIBLE (KW)	COOLING COIL TOTAL (KW)	COOLING COIL E.A.T. (°C) DB	COOLING COIL E.A.T. (°C) WB	GLYCOL L/S	HUMIDIFIER CAPACITY (KG/H)	HOT WATER REHEAT CAPACITY (KW)	HOT WATER REHEAT L/S	COND PUMP L/S	COND PUMP KPA	VOLTS	PHASE
CU-1 (NIC)	7173	7.46	82.4	83.9	23.9	16.7	4.91	10	30	NOTE 5	0.15	60	480	3
CU-2 (NIC)	7173	7.46	82.4	83.9	23.9	16.7	4.91	10	30	NOTE 5	0.15	60	480	3
CU-3 (NIC)	5663	5.6	73.2	74.7	23.9	16.7	4.22	10	30	NOTE 5	0.15	60	480	3
CU-4	1580	0.75	19.3	19.3	23.9	16.7	1.76	5	14.9	0.32	0.11	60	480	3
CU-5	318	0.149	3.8	4.7	26.7	19.4	0.32	1.1	4.6	NOTE 5	–	–	208	1
CU-6 (NIC)	2194	1.12	26.8	26.8	23.9	16.1	2	5	17	0.32	0.15	60	480	3
CU-7	318	0.149	3.8	4.7	23.9	16.9	0.32	1.1	4.6	NOTE 5	–	–	208	1

NOTES:

1. FAN L/S SHALL BE BASED ON AN EXTERNAL STATIC PRESSURE OF 124 PA EXTERNAL STATIC PREESURE DOES NOT INCLUDE COILS, FILTERS, OR CASING LOSSES.
2. COOLING CAPACITIES SHALL BE BASED ON 43.3 °C E.G.T. WITH 40 PERCENT ETHYLENE GLYCOL SOLUTION. MAXIMUM GLYCOL PRESSURE DROP SHALL BE 45 KPA, INCLUDING CONTROL VALVE.
3. REHEAT COIL CAPACITIES SHALL BE ON 82 °C E.W.T. MAXIMUM WATER PRESSURE DROP SHALL BE 45 KPA. INCLUDING CONTROL VALVE.
4. SEE SHEET M38 FOR PIPING DETAILS.
5. PROVIDE ELECTRIC HEAT.

DRYCOOLER SCHEDULE

MARK	DESCRIPTION	CAPACITY (KW)	BRINE FLOW (L/S)	MAX PRESSURE DROP (KPA)	PUMP MIN MOTOR (KW)	PUMP HEAD (KPA)	ELECTRICAL VOLTS	ELECTRICAL PHASE
DC-1	COMPUTER ROOM UNITS	132.7	8.77	45	3.7	203	480	3
DC-2	NATIONS BANK	38.7	2.52	21	1.12	165	480	3
DC-3 (NIC)	COMPUTER ROOM UNITS	200	9.84	45	5.6	269	480	3

NOTES:

1. CAPACITIES BASD ON 40% ETHYLENE GLYGOL SOLUTION WITH AN AVERAGE FLUID TEMPERATURE OF 46.1°C AND AN AMBIENT TEMPERATURE OF 35°C DB.
2. SEE SHEET M37 FOR PIPING DETAILS.

REVISIONS

H.S.M.M./C.C.A. — ATLANTIC DIVISION, NAVAL FACILITIES ENGINEERING COMMAND, NORFOLK, VIRGINIA — NAVAL STATION NORFOLK, NORFOLK, VA

RENOVATION OF BUILDING 2133

SCHEDULES

CODE ID. NO. 80091 | SIZE D | SCALE: NONE | DWG NO. 4/110 | STA. PROJ. NO. P-671 | SPEC. NO. 0596076 | CONSTR. CONT. NO. N62470-96-B-6076 | HVAC DRAWING NO. 43/110 | SHEET 225 OF 306 | M7

XREF: NONE | PLOT SCALE: 1:1 | KMV | ACAD | REV. M | JU2998 | C1786 | 6078M007

ALL DIMENSIONS ARE MILLIMETERS UNLESS OTHERWISE SHOWN

NOTES THIS SHEET:

1. SEE SHEET M1 FOR LEGEND AND GENERAL NOTES.
2. MOUNT DIFFUSERS 2740 ABOVE FINISHED FLOOR IN ALL EXPOSED AREAS.
3. 1 SLOT, 20 WIDE SLOTS, 1220 LONG CLSD.
4. 2 SLOT, 20 WIDE SLOTS, 610 LONG CLSD.
5. 330 L/S, 410x410 CR.
6. 3 SLOT, 20 WIDE SLOTS, 1220 LONG CLSD.
7. 300x250 CR.

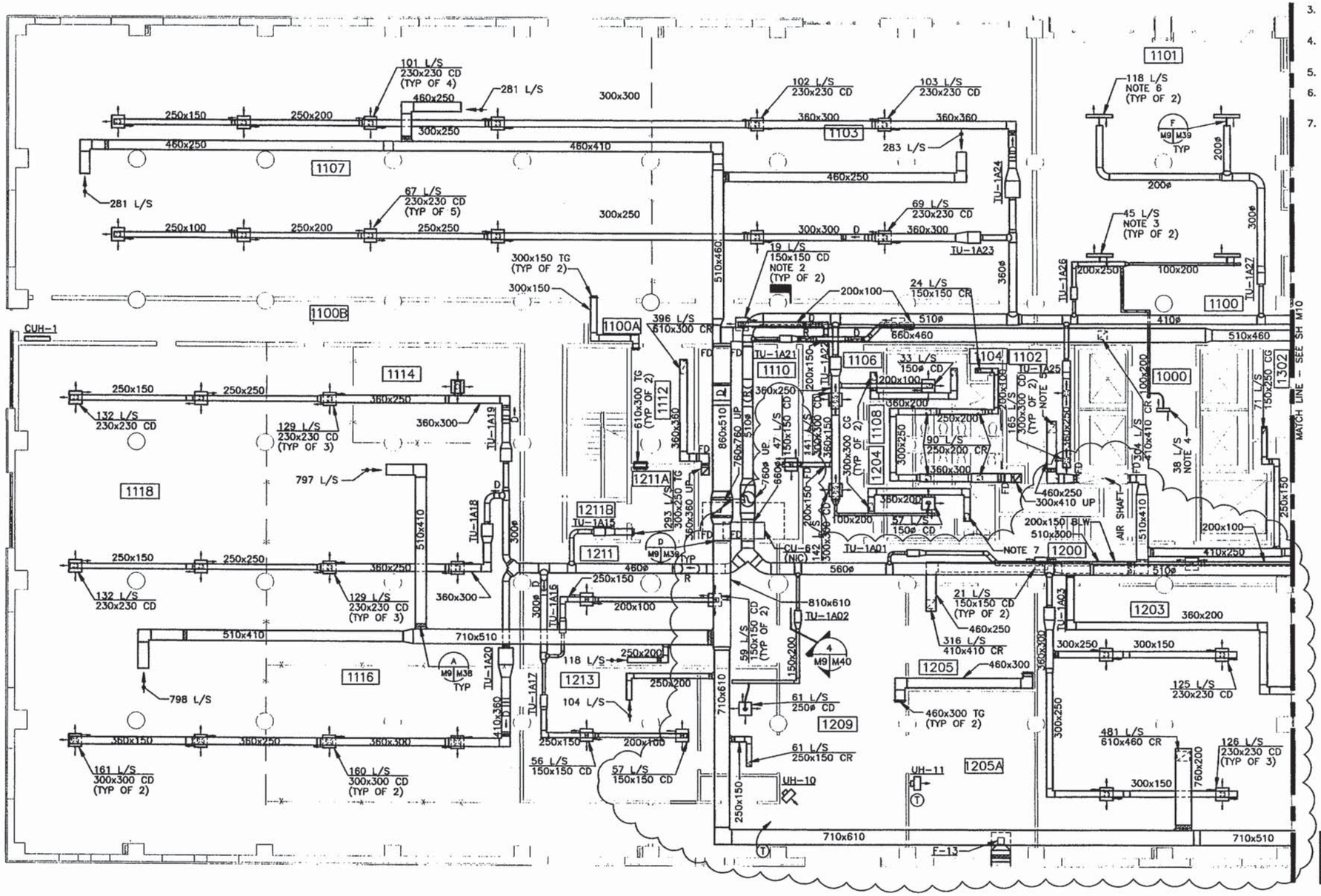

FIRST FLOOR PLAN - DUCTWORK - AREA A
SCALE: 1:100

KEYPLAN

1:100 0 1m 2m 3m 4m 5m 10m
GRAPHIC SCALE

REVISIONS

A	REVISED LAYOUT	4/98	ABC

H.S.M.M./C.C.A.
HAITCH, SIMS, MATSON & MATSON, INC./
CHRISTIAN, CHRISTIAN & ASSOCIATES
ARCHITECTS • ENGINEERS • PLANNERS • INTERIOR DESIGNERS

ATLANTIC DIVISION
NAVAL FACILITIES ENGINEERING COMMAND
NORFOLK, VIRGINIA
NAVBASE NORFOLK, VA

DEPARTMENT OF THE NAVY
NAVAL STATION
NAVBASE NORFOLK

RENOVATION OF BUILDING 7177

FIRST FLOOR PLAN - HVAC DUCTWORK - AREA A

CODE ID. NO. 00091 SIZE D
SCALE: AS NOTED
STD NO. 47 103
STA. PROJ. NO. P-471
SPEC. NO. 5596-076
CONSTR. CONTR NO. N62470-96-B-6076
NAVFAC DRAWING NO. 437 103
SHEET 20 OF 50

N9

6076M009 C1786 JU2998 REV. M ACAD KMV PLOT SCALE: 1=1 XREF: 6076-X01

ALL DIMENSIONS ARE MILLIMETERS UNLESS OTHERWISE SHOWN

NOTES THIS SHEET:

1. SEE SHEET M1 FOR LEGEND AND GENERAL NOTES.
2. MOUNT DIFFUSERS 2740 ABOVE FINISHED FLOOR IN ALL EXPOSED AREAS.
3. 3 SLOT, 20 WIDE SLOTS, 1220 LONG CLSD.
4. 118 L/S, 300x200 CG.
5. 111 L/S, 300x200 CG.
6. DIVIDED FLOW FITTING UP TO 910x1020.
7. 410x410 CG

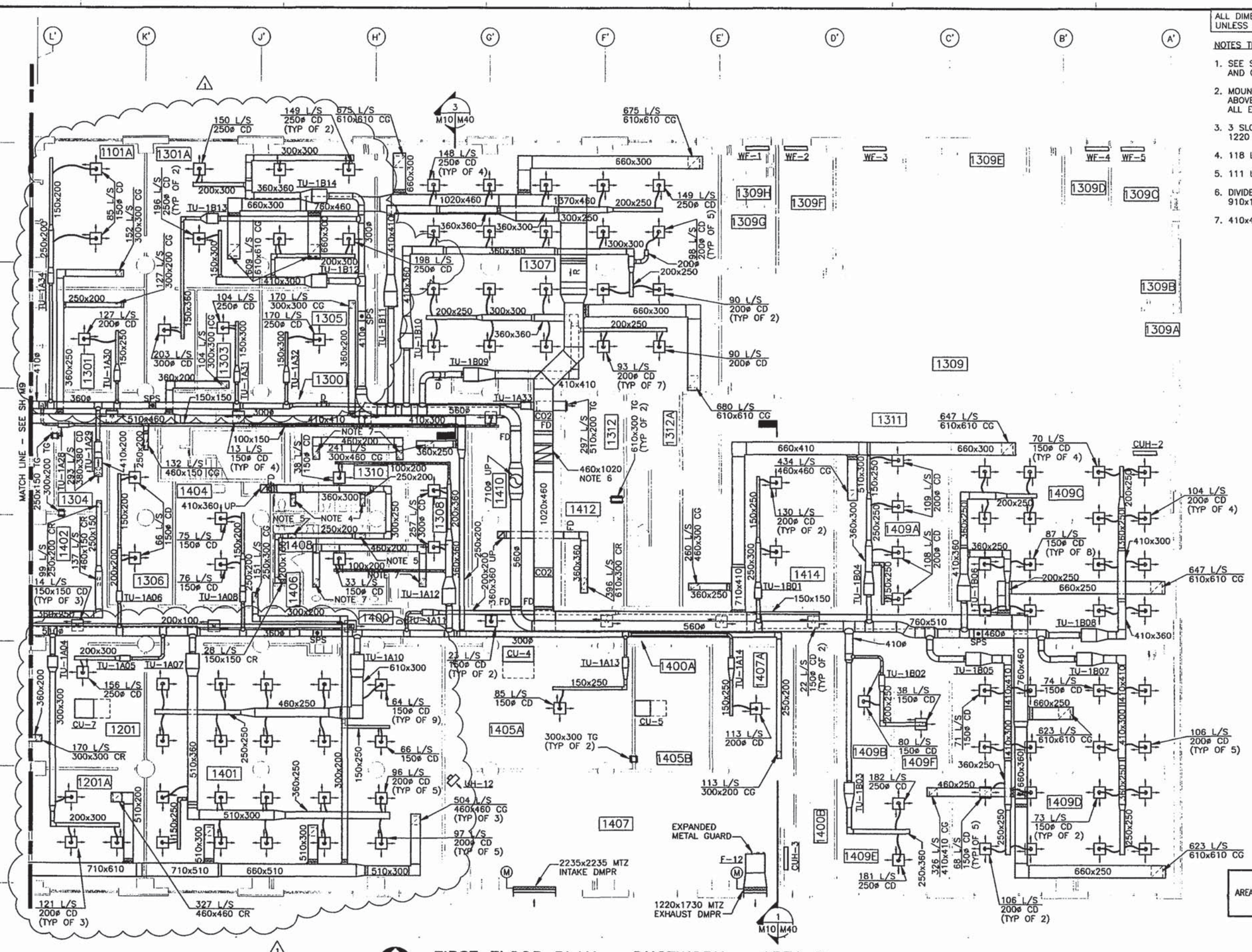

FIRST FLOOR PLAN - DUCTWORK - AREA B
SCALE: 1:100

REVISIONS

1	REVISED DATUM	6/96	ABC

H.S.M.M./C.C.A.
HUNTER SMITH MARTIN & ASSOCIATES, INC./ CAUTHEN COLLINGWOOD, ARCHITECTS

DATE 3-19-96

ACTIVITY - SATISFACTORY TO

NAVAL FACILITIES ENGINEERING COMMAND
ATLANTIC DIVISION
NORFOLK, VIRGINIA

DEPARTMENT OF THE NAVY
NAVAL STATION
NAVBASE NORFOLK
NORFOLK, VA

RENOVATION OF BUILDING 2733

FIRST FLOOR PLAN - HVAC DUCTWORK - AREA B

CODE ID. NO. 60028 SIZE D
SCALE: AS NOTED
EFD NO. 71164
STA. PROJ. NO. F-671
SPEC. NO. 05956076
CONTR. CONT. NO. N62470-96-B-6076
NAVFAC DRAWING NO. 4371164
SHEET 2 OF 3 OF 3
M10

6076M009 C1786 JU1798 REV: J ACAD KMV PLOT SCALE: 1=1 XREF: 6076-X01

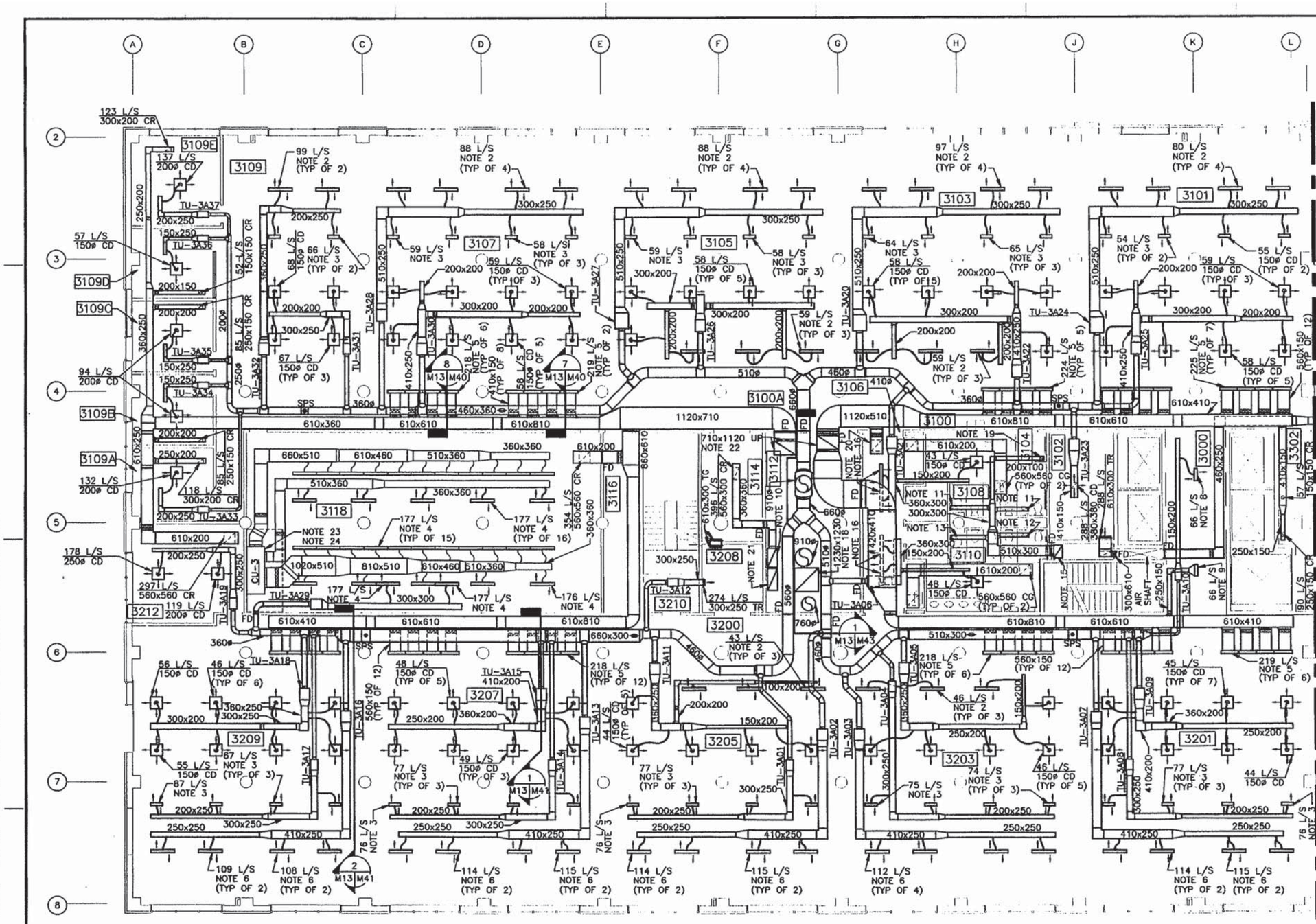

ALL DIMENSIONS ARE MILLIMETERS UNLESS OTHERWISE SHOWN

NOTES THIS SHEET:

1. SEE SHEET M1 FOR LEGEND AND GENERAL NOTES.
2. 2 SLOT, 20 WIDE SLOTS, 1220 LONG, CLSD.
3. 3 SLOT, 25 WIDE SLOTS, 610 LONG, CLSD.
4. 3 SLOT, 25 WIDE SLOTS, 1220 LONG, CLSD.
5. 3 SLOT, 25 WIDE SLOTS, 910 LONG, CLSR.
6. 3 SLOT, 20 WIDE SLOTS, 1220 LONG, CLSD.
7. NOT USED.
8. 2 SLOT, 25 WIDE SLOTS, 610 LONG, CLSD.
9. 2 SLOT, 25 WIDE SLOTS, 610 LONG, CLSR. TRANSITION TO FULL SIZE OF CLSR CONNECTION.
10. 610x510 DOWN TO 460x460.
11. 300x200 DUCT. 300x200 CR BALANCED AT 132 L/S.
12. 300x200 DUCT. 300x200 CR BALANCED AT 141 L/S.
13. 300x200 DUCT. 300x200 CR BALANCED AT 142 L/S.
14. 250x150 CR BALANCED AT 57 L/S.
15. 460x710 DOWN TO 460x510.
16. 4 SLOT, 25 WIDE SLOTS, 1220 LONG, CLSD BALANCED AT 193 L/S.
17. NOT USED.
18. TRANSITION DN TO 1740x870 IN VERTICAL.
19. 150x150 CR BALANCED AT 24 L/S.
20. 610x250 DUCT. 560x560 CR BALANCED AT 363 L/S.
21. 510x1130 DOWN TO 760x760.
22. CONNECT TWO 710x1120 DUCTS IN VERTICAL TO 1320x1270.
23. EXTEND RETURN PLENUM TO ABOVE CEILING.
24. CU-3 AND CONNECTING DUCTWORK AND DIFFUSERS ARE NIC.

ENTIRE SHEET REVISED

AREA A | MATCHLINE | AREA B

KEYPLAN

1:100 0 1m 2m 3m 4m 5m 10m

GRAPHIC SCALE

THIRD FLOOR PLAN - DUCTWORK - AREA A

SCALE: 1:100

REVISIONS			
1	ENTIRE SHEET REVISED	6/98	ABC

DRAWN KMV | REVIEW BJE | CHIEF ARCH/ ENGR. | PROJECT MANAGER | BRANCH MANAGER

H.S.M.M./C.C.A.
HANES, SEAH, MATSON & MATSON, INC./ CHRISTIANSEN & ASSOCIATES
ARCHITECTS & ENGINEERS • PLANNERS • INTERIOR DESIGNERS

APPROVED | DATE | ACTIVITY - SATISFACTORY TO

DEPARTMENT OF THE NAVY
NAVAL FACILITIES ENGINEERING COMMAND
ATLANTIC DIVISION
NAVAL STATION NORFOLK, VIRGINIA
NAVBASE NORFOLK
RENOVATION OF BUILDING Z133
THIRD FLOOR PLAN - HVAC DUCTWORK - AREA A

CODE ID. NO. 80091 | SIZE E
SCALE: AS NOTED
EFD NO. 471107
STA. PROJ. NO. P-679
SPEC. NO. 05966076
CONTR. CONTR. NO. N62470-96-B-5076
HVAC DRAWING NO. 4371107
SHEET 211 OF 308
M13

ALL DIMENSIONS ARE MILLIMETERS UNLESS OTHERWISE SHOWN

NOTES THIS SHEET:

1. SEE SHEET M1 FOR LEGEND AND GENERAL NOTES.
2. 2 SLOT, 20 WIDE SLOTS, 1220 LONG, CLSD.
3. 3 SLOT, 25 WIDE SLOTS, 610 LONG, CLSD.
4. NOT USED.
5. 3 SLOT, 25 WIDE SLOTS, 910 LONG, CLSR.
6. 3 SLOT, 20 WIDE SLOTS, 1220 LONG, CLSD.
7. 4 SLOT, 20 WIDE SLOTS, 1220 LONG, CLSD.
8. 610x300 TG LOCATED BELOW CEILING.
9. 760x510 DN TO 610x410.
10. 610x510 DN TO 460x460.
11. 1370x760 DN TO 1170x510.
12. 1020x910 UP AND DN.
13. 1120x970 UP AND DN.
14. 150ø CD BALANCED AT 80 L/S.
15. 250x150 DUCT. 250x150 CR BALANCED AT 80 L/S.
16. 200x150 DUCT. 200x150 CR BALANCED AT 61 L/S.
17. 610x150 DUCT. 560x560 CR BALANCED AT 236 L/S.
18. 150ø CD BALANCED AT 19 L/S.
19. 150ø CD BALANCED AT 80 L/S.
20. 300x250 DUCT. 250x250 CR BALANCED AT 165 L/S.

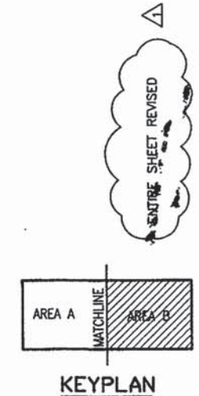

THIRD FLOOR PLAN – DUCTWORK – AREA B

SCALE: 1:100

1:100 0 1m 2m 3m 4m 5m 10m

GRAPHIC SCALE

REVISIONS

DESCRIPTION	DATE	APPROVED
ALL ENTIRE SHEET REVISED	5/20/98	

H.S.M.M./C.C.A.
HAYES, SEAY, MATTERN & MATTERN, INC./ CROXTON COLLABORATIVE ARCHITECTS

ACTIVITY – SATISFACTORY TO
FIRE PROTECTION ENGINEER
BRANCH MANAGER
DESIGN DIRECTOR
3-19-98

NAVAL FACILITIES ENGINEERING COMMAND
ATLANTIC DIVISION
NORFOLK, VIRGINIA
DEPARTMENT OF THE NAVY
NAVAL STATION
NAVBASE NORFOLK
NORFOLK, VA

RENOVATION OF BUILDING 2133

THIRD FLOOR PLAN – HVAC DUCTWORK – AREA B

CODE ID. NO. 60011 SIZE D
SCALE: AS NOTED
EFD NO. 4711B
SEA. PROJ. NO. P-671
SPEC. NO. 0596076
CONSTR. CONTR. NO. N62470-96-B-6076
HVAC DRAWING NO. 4311B
SHEET 21 OF 308

M14

6076M013 C1786 JU0998 REV. K ACAD KMV PLOT SCALE: 1=1 XREF: 6076-X03

MATCH LINE – SEE SH M13

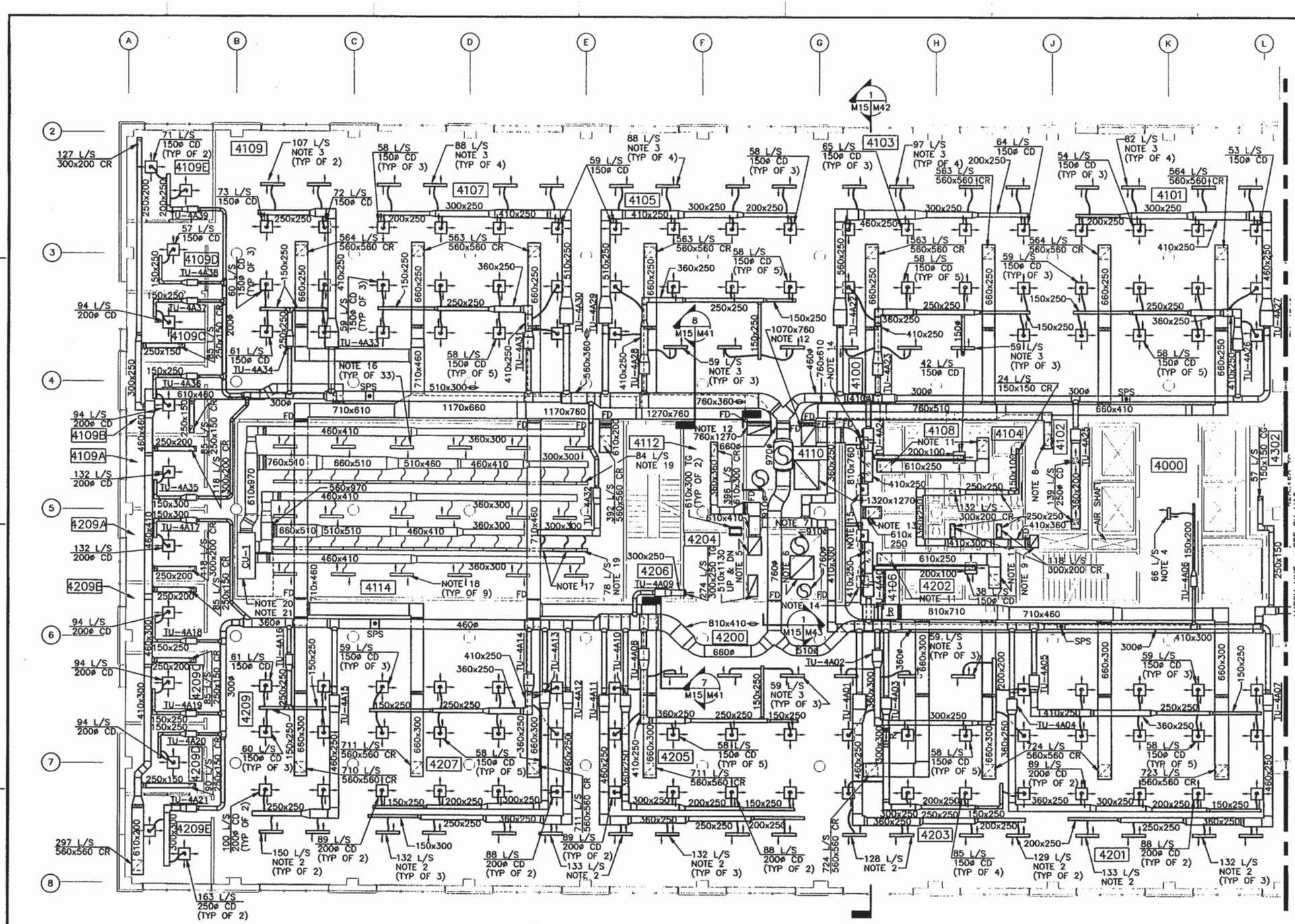

FOURTH FLOOR PLAN - DUCTWORK - AREA A

SCALE: 1:100

ALL DIMENSIONS ARE MILLIMETERS UNLESS OTHERWISE SHOWN

NOTES THIS SHEET:

1. SEE SHEET M1 FOR LEGEND AND GENERAL NOTES.
2. 4 SLOT, 20 WIDE SLOTS, 1220 LONG CLSD.
3. 2 SLOT, 20 WIDE SLOTS, 1220 LONG CLSD.
4. 2 SLOT, 25 WIDE SLOTS, 610 LONG CLSD.
5. 760x610 DN TO 610x510.
6. 1230x1230 UP & DN.
7. 510x360 EXHAUST.
8. 278 L/S, 610x300 CR.
9. 610x710 DN TO 460x710.
10. NOT USED.
11. 560x560 CG.
12. CONNECT 1070x760 & 760x1270 DUCTS IN VERTICAL TO 1520x1270.
13. 411 L/S, 560x560 CR.
14. 195 L/S, 300ø CD.
15. 196 L/S, 360ø CD.
16. 3 SLOT, 25 WIDE SLOTS, 1220 LONG CLSD BALANCED AT 169 L/S.
17. 3 SLOT, 25 WIDE SLOTS, 1220 LONG CLSD BALANCED AT 157 L/S.
18. 3 SLOT, 25 WIDE SLOTS, 1220 LONG CLSD BALANCED AT 168 L/S.
19. 3 SLOT, 25 WIDE SLOTS, 610 LONG CLSD.
20. EXTEND RETURN PLENUM TO ABOVE CEILING.
21. CU-1 AND CONNECTING DUCTWORK AND DIFFUSERS ARE NIC.

ENTIRE SHEET REVISED

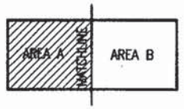

KEYPLAN

1:100 0 1m 2m 3m 4m 5m 10m

GRAPHIC SCALE

REVISIONS			
1	ENTIRE SHEET REVISED	6/98	ABC

H.S.M.M./C.C.A.

DEPARTMENT OF THE NAVY — NAVAL FACILITIES ENGINEERING COMMAND — ATLANTIC DIVISION — NORFOLK, VIRGINIA

NAVAL STATION — NAVBASE NORFOLK — NORFOLK, VA

RENOVATION OF BUILDING Z133

FOURTH FLOOR PLAN - HVAC DUCTWORK - AREA A

CODE ID. NO. 60000 — SCALE: AS NOTED

STD NO. 471109 — STA. PROJ. NO. F-67

SPEC. NO. 0566016

CONTR. CONTR. NO. N62470-96-B-6076

NAVFAC DRAWING NO. 437109

SHEET 215 OF 226

M15

XREF: 6076-X04 PLOT SCALE: 1=1 ACAD KMV REV. P JU2998 C1786 6076M015

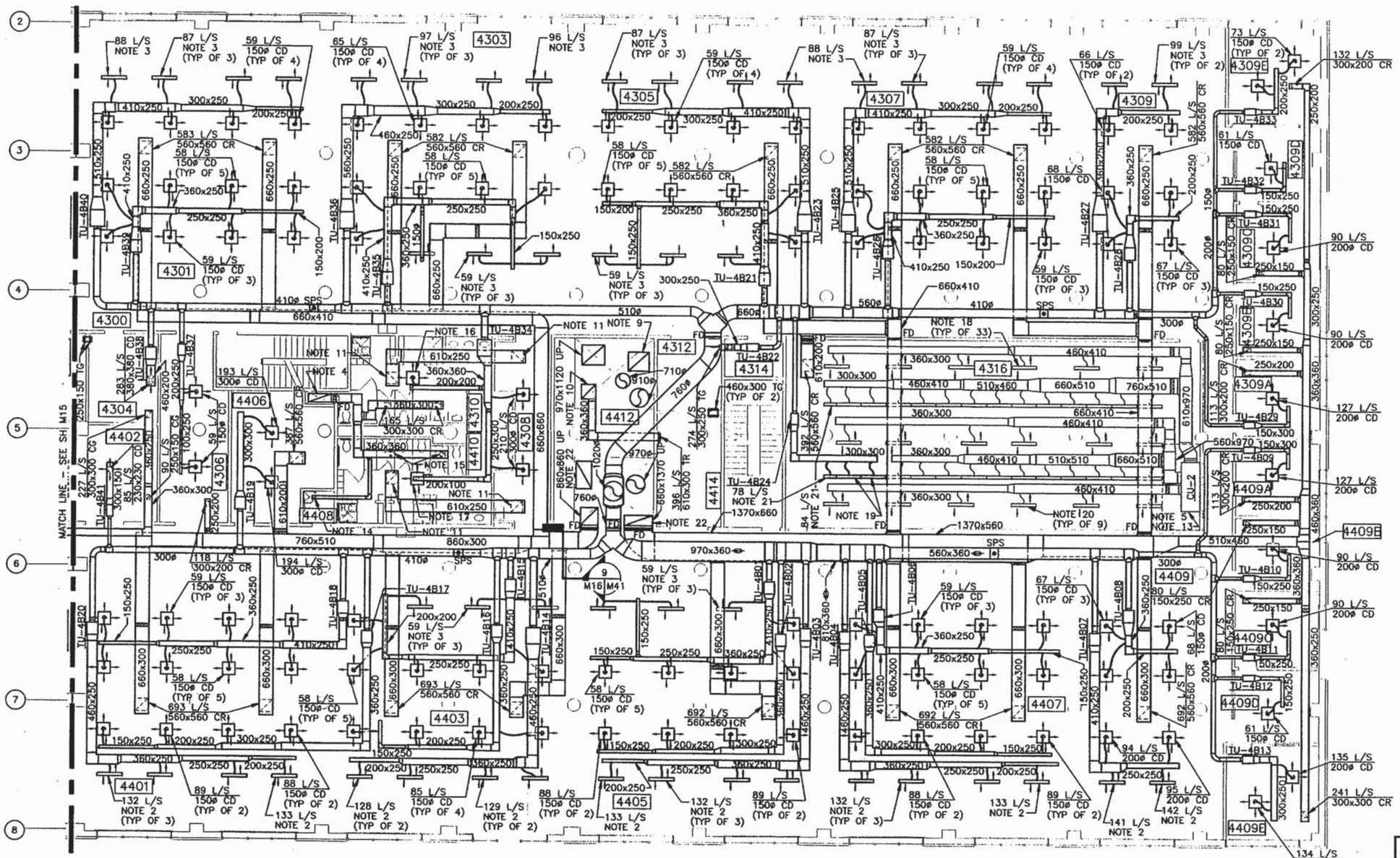

ALL DIMENSIONS ARE MILLIMETERS UNLESS OTHERWISE SHOWN

NOTES THIS SHEET:

1. SEE SHEET M1 FOR LEGEND AND GENERAL NOTES.
2. 4 SLOT, 20 WIDE SLOTS, 1220 LONG CLSD.
3. 2 SLOT, 20 WIDE SLOTS, 1220 LONG CLSD.
4. 1120x510 DN TO 760x510.
5. CU-2 AND CONNECTING DUCTWORK AND DIFFUSERS ARE NIC.
6. NOT USED.
7. NOT USED,
8. NOT USED.
9. 1020x910 UP.
10. 610x610 DN TO 610x510.
11. 560x560 CG.
12. NOT USED.
13. EXTEND RETURN PLENUM TO ABOVE CEILING.
14. 24 L/S, 150x150 CR IN BOTTOM OF 200x150 DUCT.
15. 175 L/S, 300x300 CR.
16. 52 L/S, 150ø CD.
17. 57 L/S, 150ø CD.
18. 3 SLOT, 25 WIDE SLOTS, 1220 LONG CLSD BALANCED AT 169 L/S.
19. 3 SLOT, 25 WIDE SLOTS, 1220 LONG CLSD BALANCED AT 157 L/S.
20. 3 SLOT, 25 WIDE SLOTS, 1220 LONG CLSD BALANCED AT 168 L/S.
21. 3 SLOT, 25 WIDE SLOTS, 610 LONG CLSD.
22. CONNECT 860x860 AND 660x1370 DUCTS TO 1520x1270 IN VERTICAL.

ENTIRE SHEET REVISED

AREA A | MATCHLINE | AREA B

KEYPLAN

1:100 0 1m 2m 3m 4m 5m 10m

GRAPHIC SCALE

FOURTH FLOOR PLAN - DUCTWORK - AREA B

SCALE: 1:100

REVISIONS

DATE	DESCRIPTION
5/30	ASB ENTIRE SHEET REVISED

DRAWN: KMV CHECKED: JTF
DATE: 3/19/99

H.S.M.M./C.C.A. HAYES, SIMS, MATSON & MATSON, INC./ CROXTON COLLABORATIVE, ARCHITECTS

APPROVED: ALABAMA ALLEN B. CROXTON PROFESSIONAL ENGINEER

DEPARTMENT OF THE NAVY — NAVAL FACILITIES ENGINEERING COMMAND, NORFOLK, VIRGINIA
NAVAL STATION NORFOLK — ATLANTIC DIVISION
NAVFAC NORFOLK, VA

RENOVATION OF BUILDING 7155

FOURTH FLOOR PLAN - HVAC DUCTWORK - AREA B

CODE ID. NO. 00001 SIZE D
SCALE: AS NOTED
EFD NO. 471110
STA. PROJ. NO. P-571
SPEC. NO. 05966076
CONTR. CONTR. NO. N62470-96-C-6076
NAVFAC DRAWING NO. 437118
SHEET 212 OF 308
M16

6076M015 C1786 JU2998 REV. P ACAD KMV PLOT SCALE: 1=1 XREF: 6076-X04

ALL DIMENSIONS ARE MILLIMETERS UNLESS OTHERWISE SHOWN

NOTES THIS SHEET:

1. SEE SHEET M1 FOR LEGEND AND GENERAL NOTES.
2. CU-6 AND CONNECTING PIPING ARE NIC.

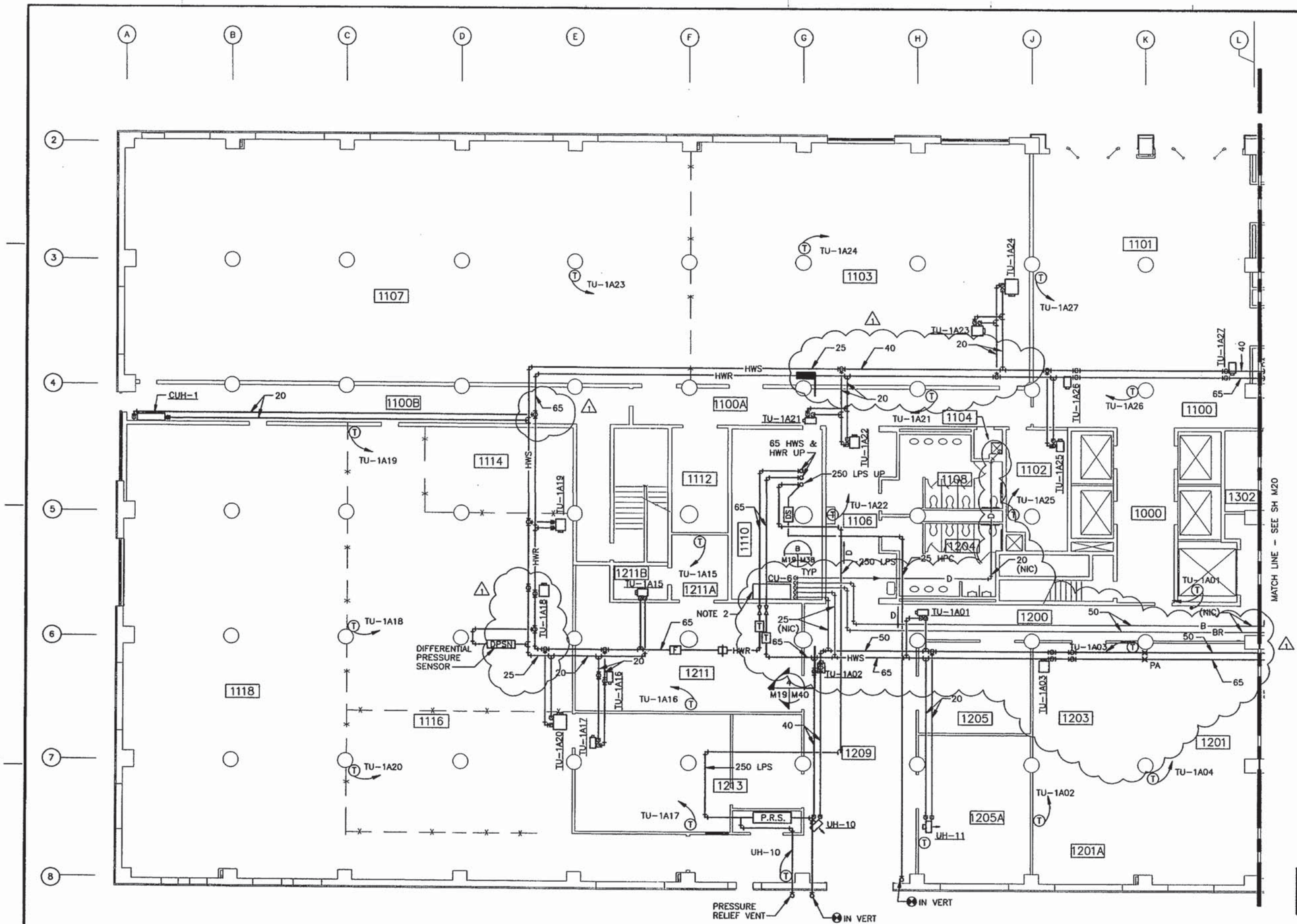

FIRST FLOOR PLAN - PIPING - AREA A

SCALE: 1:100

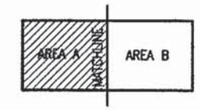

KEYPLAN

1:100 0 1m 2m 3m 4m 5m 10m

GRAPHIC SCALE

REVISIONS		
1	REVISED LAYOUT	6/98 ABC

DESIGN DTH
DRAWN KMV
REVIEW WED
QC BJE

PROJECT MANAGER JTT
BRANCH MANAGER STMA
DESIGN DIRECTOR

H.S.M.M./C.C.A.
HAYES, SEAY, MATTERN & MATTERN, INC./ CRAXTON COLLIGNON & ARCHITECTS
ARCHITECTS • ENGINEERS • PLANNERS • INTERIOR DESIGNERS

APPROVED
ACTIVITY - SATISFACTORY TO
DATE 3/31/99

NAVAL FACILITIES ENGINEERING COMMAND
ATLANTIC DIVISION
NORFOLK, VIRGINIA
DEPARTMENT OF THE NAVY
NAVAL STATION NORFOLK
NAVBASE NORFOLK, VA

RENOVATION OF BUILDING Z133

FIRST FLOOR PLAN - HVAC PIPING - AREA A

CODE ID. NO. 80021 | SIZE D
SCALE: AS NOTED
ETO NO. 471133
EFA PROJ. NO. 1-67
SPEC. NO. 05666076
CONTRS. CONTR. NO. N62470-95-B-4076
HVAC DRAWING NO. 4371113
SHEET 217 OF 228

M19

6076M019 C1786 JU2998 REV. M ACAD KMV PLOT SCALE: 1=1 XREF: 6076-X01

ALL DIMENSIONS ARE MILLIMETERS UNLESS OTHERWISE SHOWN

NOTES THIS SHEET:

1. SEE SHEET M1 FOR LEGEND AND GENERAL NOTES.
2. PROVIDE PIPE ANCHOR.
3. RUN PIPING BENEATH WINDOWS.
4. TEMPORARY LOCATION. RELOCATE TO ROOFTOP LOCATION DURING FINAL PHASE OF CONSTRUCTION. SEE SH M34.

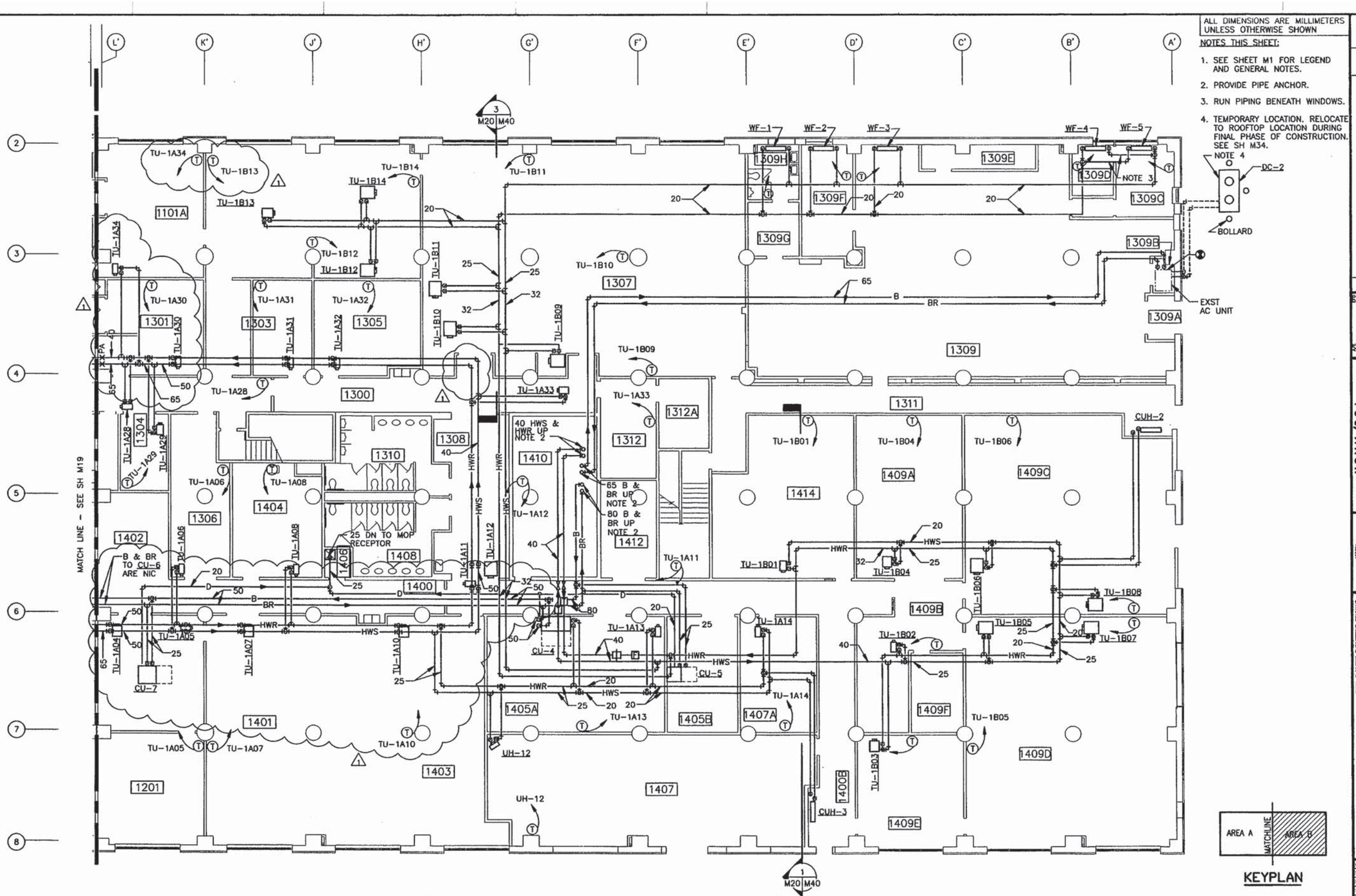

FIRST FLOOR PLAN – PIPING – AREA B

SCALE: 1:100

KEYPLAN

1:100 0 1m 2m 3m 4m 5m 10m

GRAPHIC SCALE

REVISIONS			
SYM.	DESCRIPTION	DATE	APPROVED
1	REVISED LAYOUT	07/30	ADC

DWN DTH; DSGN KMV; CHKD WRD; REVIEW JTT; DATE; PROJECT MANAGER; PRINCIPAL ENGINEER; DESIGN DIRECTOR

H.S.M.M./C.C.A. HUNTER SMITH MARSHALL & MARTIN, INC./ CROSTON CALLAGHAN, ARCHITECTS

APPROVED; DATE; ACTIVITY - SATISFACTORY TO; DATE; FOR BTL CONTROL USE

DEPARTMENT OF THE NAVY
NAVAL FACILITIES ENGINEERING COMMAND
ATLANTIC DIVISION
NORFOLK, VIRGINIA
NAVAL STATION
NAVBASE NORFOLK
NORFOLK, VA

RENOVATION OF BUILDING 2135

FIRST FLOOR PLAN – HVAC PIPING – AREA B

CODE ID. NO.	80091
SIZE	D
SCALE:	AS NOTED
EFD NO.	7114
EFA PROJ. NO.	P-671
SPEC. NO.	05866076
CONSTR. CONTR. NO.	N62470-96-B-6076
HVAC DRAWING NO.	47114
SHEET	2 OF 3 OF 308

M20

XREF: 6076-XO1 PLOT SCALE: 1=1 ACAD KMV REV. L JU2998 C1786 6076M019

ALL DIMENSIONS ARE MILLIMETERS UNLESS OTHERWISE SHOWN

NOTES THIS SHEET:

1. SEE SHEET M1 FOR LEGEND AND GENERAL NOTES.

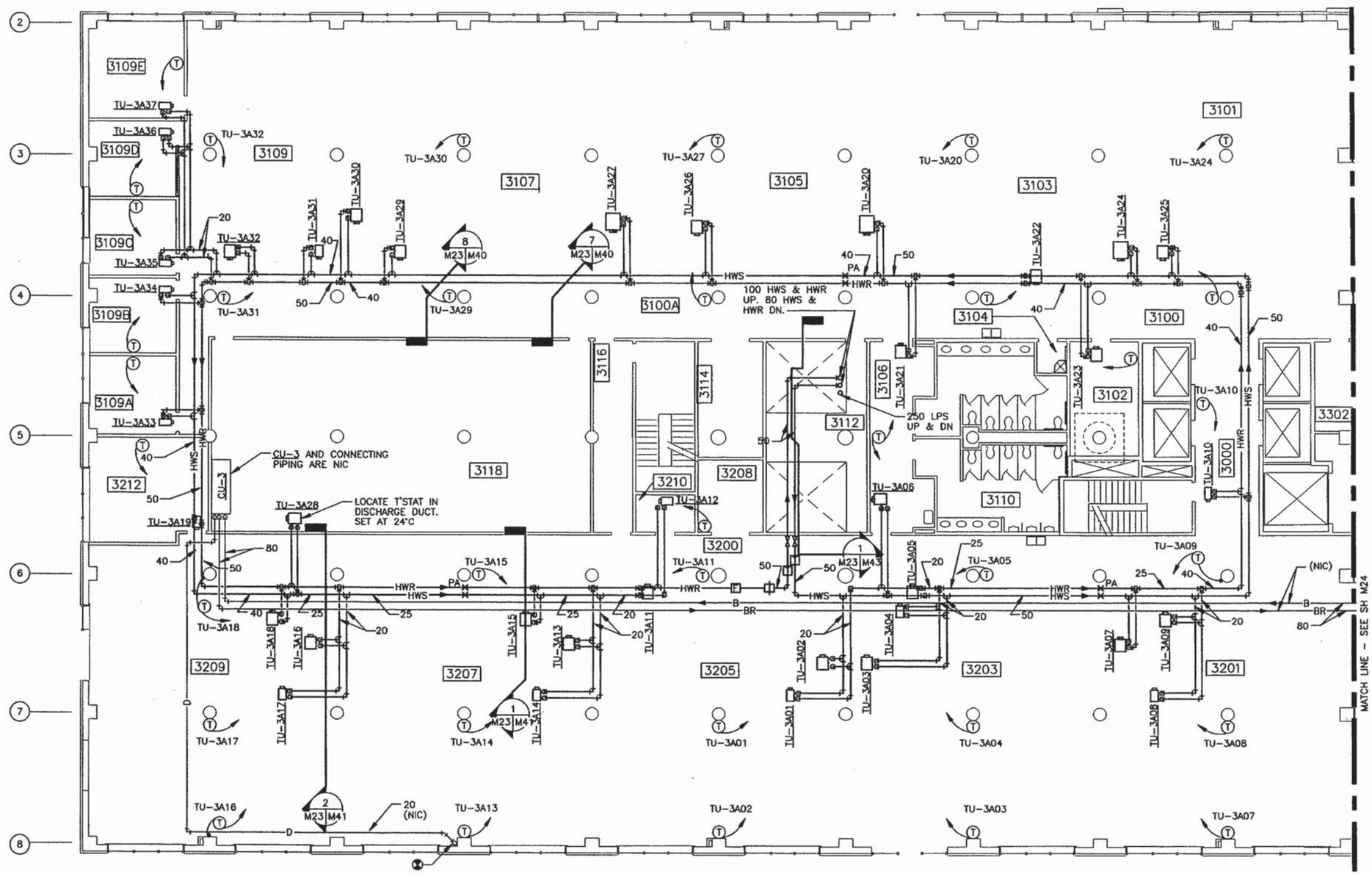

THIRD FLOOR PLAN – PIPING – AREA A

SCALE: 1:100

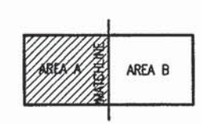

KEYPLAN

1:100 0 1m 2m 3m 4m 5m 10m

GRAPHIC SCALE

ENTIRE SHEET REVISED

REVISIONS			
	ENTIRE SHEET REVISED	6/98	ABC

DEPARTMENT OF THE NAVY — NAVAL FACILITIES ENGINEERING COMMAND
NAVAL STATION — ATLANTIC DIVISION — NORFOLK, VIRGINIA
NAVBASE NORFOLK — NORFOLK, VA

RENOVATION OF BUILDING 7133

THIRD FLOOR PLAN – HVAC PIPING – AREA A

H.S.M.M./C.C.A.

CODE ID. NO. 80091 — SIZE D
SCALE: AS NOTED
EFD NO. 471117
ESA PROJ. NO. P-571
SPEC. NO. 0596078
CONSTR. CONTR. NO. N62470-96-B-6016
NAVFAC DRAWING NO. 437111
SHEET 22 OF 302

M23

XREF: 6076-X03 PLOT SCALE: 1=1 ACAD KMV REV. L JU2998 C1786 6076M023

ALL DIMENSIONS ARE MILLIMETERS UNLESS OTHERWISE SHOWN

NOTES THIS SHEET:

1. SEE SHEET M1 FOR LEGEND AND GENERAL NOTES.
2. PROVIDE EXPANSION JOINT.
3. B & BR PIPING TO CU-3 ARE NIC.

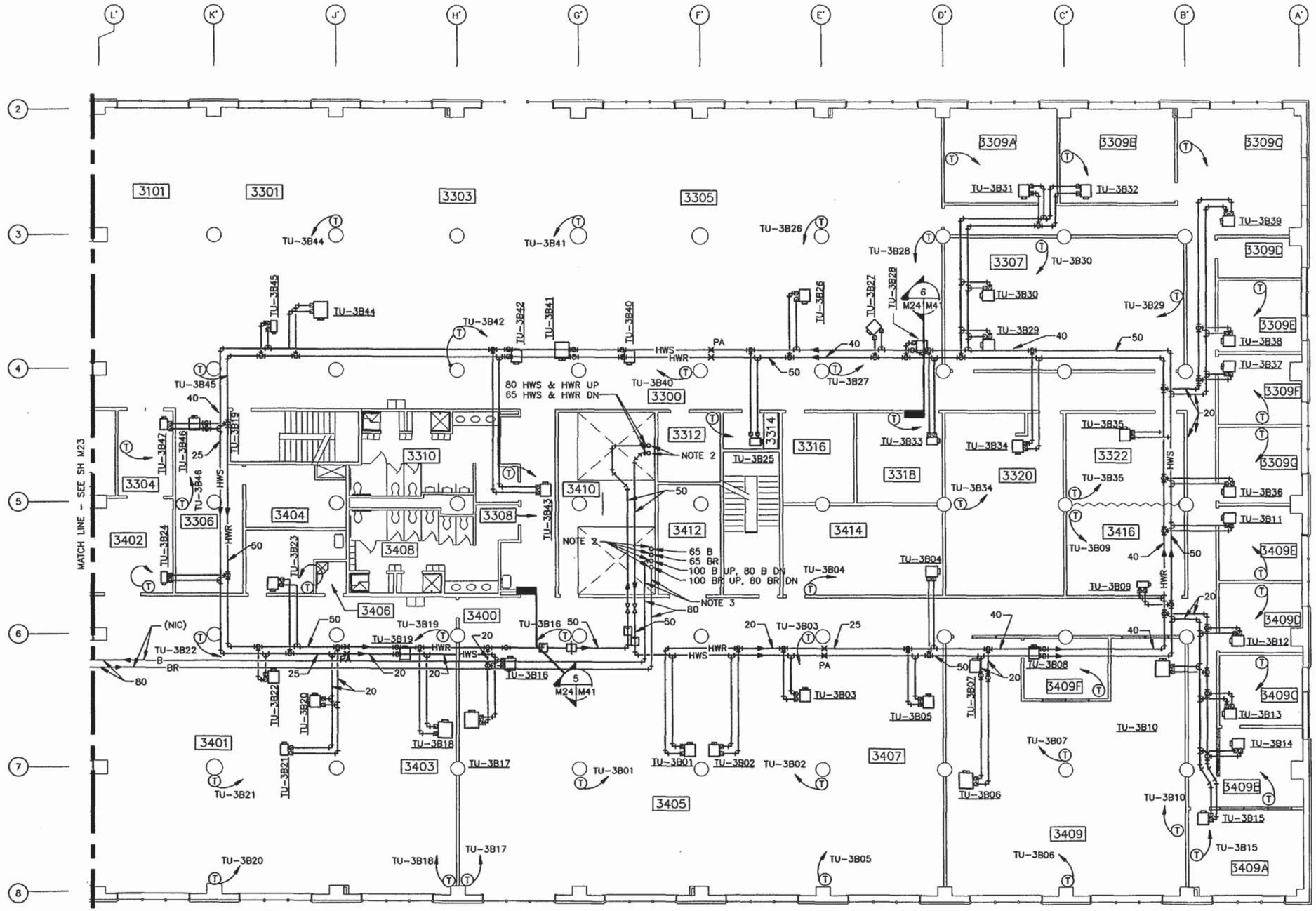

THIRD FLOOR PLAN - PIPING - AREA B
SCALE: 1:100

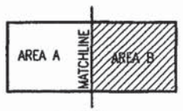

KEYPLAN

1:100 0 1m 2m 3m 4m 5m 10m

GRAPHIC SCALE

ENTIRE SHEET REVISED

1	ENTIRE SHEET REVISED	6/98	ABC

REVISIONS

DTH KMV JJK BJF

H.S.M.M./C.C.A.
HAYES, SEAY, MATTERN & MATTERN, INC./ CROSTON COLLIGNONE ARCHITECTS
ARCHITECTS • ENGINEERS • PLANNERS • INTERIOR DESIGNERS

ATLANTIC DIVISION
NAVAL FACILITIES ENGINEERING COMMAND
NORFOLK, VIRGINIA
DEPARTMENT OF THE NAVY
NAVAL STATION NORFOLK, VA
NAVBASE NORFOLK

RENOVATION OF BUILDING 7133

THIRD FLOOR PLAN - HVAC PIPING - AREA B

CODE IDENT. NO. 80091 SIZE D
SCALE: AS NOTED
EFD NO. 4371118
STA. PROJ. NO. P-621
SPEC. NO. 0396-96
CONTR. CONTR. NO. N62470-95-B-6076
HVAC DRAWING NO. 4371118
SHEET 222 OF 308
M24

6/26/98

XREF: 6076-X03 PLOT SCALE: 1=1 ACAD KMV REV. K JU2998 C1786 6076M023

ALL DIMENSIONS ARE MILLIMETERS UNLESS OTHERWISE SHOWN

NOTES THIS SHEET:

1. SEE SHEET M1 FOR LEGEND AND GENERAL NOTES.
2. FOR CONT SEE SH M23 AND M27.

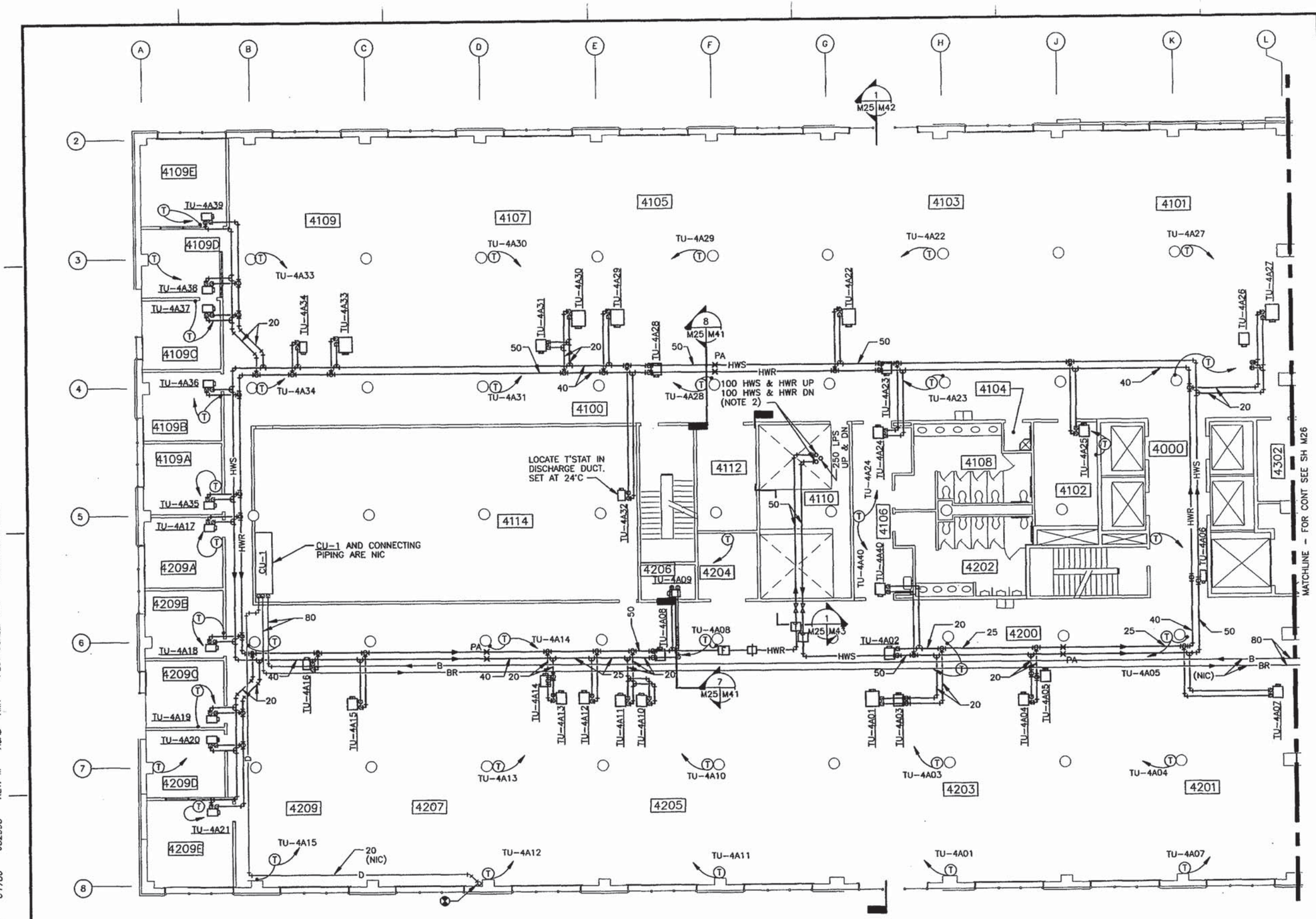

FOURTH FLOOR PLAN – PIPING – AREA A

SCALE: 1:100

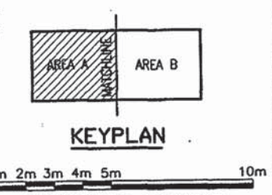

KEYPLAN

1:100 0 1m 2m 3m 4m 5m 10m

GRAPHIC SCALE

1	ENTIRE SHEET REVISED	6/98	ABC
	DESCRIPTION	DATE	APPROVED

REVISIONS

DTH KMV — DESIGN / DRAWN
BJE — REVIEW / QC
CHIEF ARCH/ DATE

H.S.M.M./C.C.A.
HAITE, SERF, MATSON & MATSON, INC. / CRUTCHER COLLABORATIVE ARCHITECTS
ARCHITECTS • ENGINEERS • PLANNERS • INTERIOR DESIGNERS
APPROVED DATE

ALABAMA REGISTERED ARCHITECT No. 2303 PROFESSIONAL SEAL

SUBMITTED - SATISFACTORY TO DATE
APPROVED DATE

DEPARTMENT OF THE NAVY — NAVAL FACILITIES ENGINEERING COMMAND
ATLANTIC DIVISION — NORFOLK, VIRGINIA
NAVAL STATION NAVBASE NORFOLK — NORFOLK, VA

RENOVATION OF BUILDING 2133

FOURTH FLOOR PLAN – HVAC PIPING – AREA A

CODE ID. NO. 80009	SIZE D
SCALE: AS NOTED	
E/D NO. 471119	
SEA PROJ. NO. P-671	
SPEC. NO. 0596600	
CONTR. CONTS. NO. N62470-96-B-8076	
NAVFAC DRAWING NO. 437119	
SHEET 223 OF 300	

M25

XREF: 6076-X04 PLOT SCALE: 1=1 KMV ACAD REV. M JU2998 C1786 6076M025

ALL DIMENSIONS ARE MILLIMETERS UNLESS OTHERWISE SHOWN

NOTES THIS SHEET:

1. SEE SHEET M1 FOR LEGEND AND GENERAL NOTES.

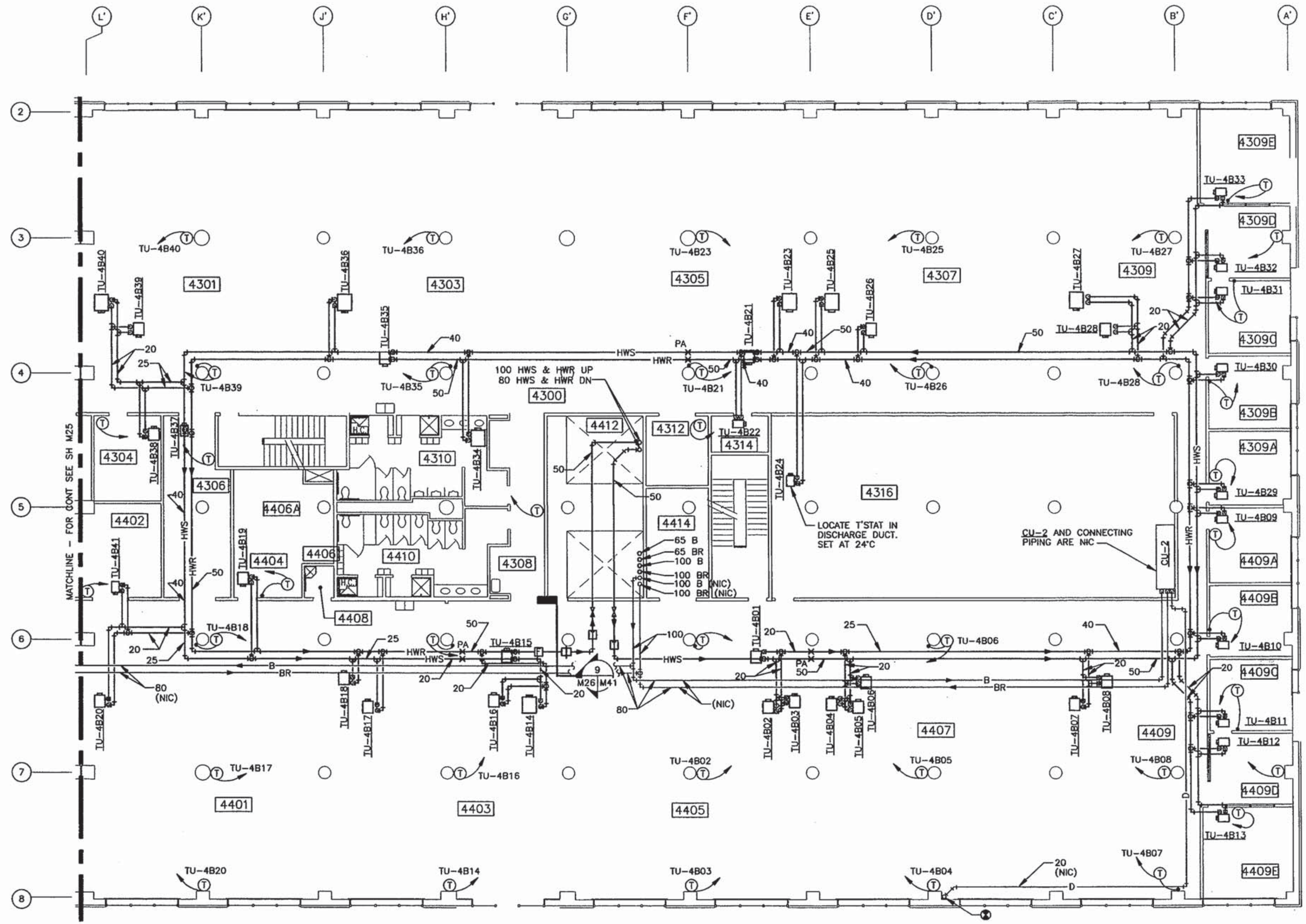

FOURTH FLOOR PLAN – PIPING – AREA B

SCALE: 1:100

ENTIRE SHEET REVISED

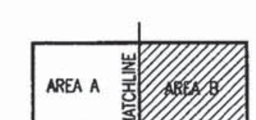

KEYPLAN

1:100 0 1m 2m 3m 4m 5m 10m

GRAPHIC SCALE

1	ENTIRE SHEET REVISED	6/98	ABC
SYM.	DESCRIPTION	DATE	APPROVED

REVISIONS

A/E: DTH DESIGN; KMV DRAWN; JTF REVIEW; BJF QC

H.S.M.M./C.C.A.
HAYES, SEAY, MATTERN & MATTERN, INC./ CROXTON COLLABORATIVE ARCHITECTS
ARCHITECTS • ENGINEERS • PLANNERS • INTERIOR DESIGNERS

DATE 3/19/98

ALABAMA PROFESSIONAL ENGINEER ALLEN B. CROOK

DEPARTMENT OF THE NAVY — NAVAL FACILITIES ENGINEERING COMMAND
ATLANTIC DIVISION — NORFOLK, VIRGINIA
NAVAL STATION NAVBASE NORFOLK — NORFOLK, VA

RENOVATION OF BUILDING Z133

FOURTH FLOOR PLAN – HVAC PIPING – AREA B

CODE ID. NO.	80091 SIZE D
SCALE:	AS NOTED
EFD NO.	47120
STA. PROJ. NO.	P-071
SPEC. NO.	05960076
CONSTR. CONTR. NO.	N62470-96-B-6076
NAVFAC DRAWING NO.	437120
SHEET	226 OF 308

M26

6076M025 C1786 JU2998 REV. K ACAD KMV PLOT SCALE: 1=1 XREF: 6076-X04

ALL DIMENSIONS ARE MILLIMETERS UNLESS OTHERWISE SHOWN

NOTES THIS SHEET:

1. SEE SHEET M1 FOR LEGEND AND GENERAL NOTES.
2. DUCT SILENCERS SHALL BE INSTALLED CENTERED IN THE LENGTH OF STRAIGHT RUN SHOWN.
3. DISCHARGE ELBOW SHALL BE FULL SIZE OF AH CONNECTION.
4. BLANK OFF ANY UNUSED LOUVER AREA WITH INSULATED PANELS (TYPICAL OF ALL).
5. OA INTAKE DUCT SHALL TRANSITION TO FULL SIZE OF AH CONNECTION.
6. VERIFY PIPE SIZE PER MANUFACTURER'S RECOMMENDATIONS. TERMINATE OUTSIDE WITH A DOWN TURNED ELBOW AND INSECT SCREEN.
7. TRANSITION TO FULL SIZE OF PENTHOUSE CONNECTION.
8. 610x1020 MTZ RELIEF DMPR.
9. 50 OZONE SUPPLY. SEE SH M33.
10. 80 OZONE RETURN. SEE SH M33.
11. VERIFY PIPE SIZE WITH OZONE SYSTEM MANUFACTURER.

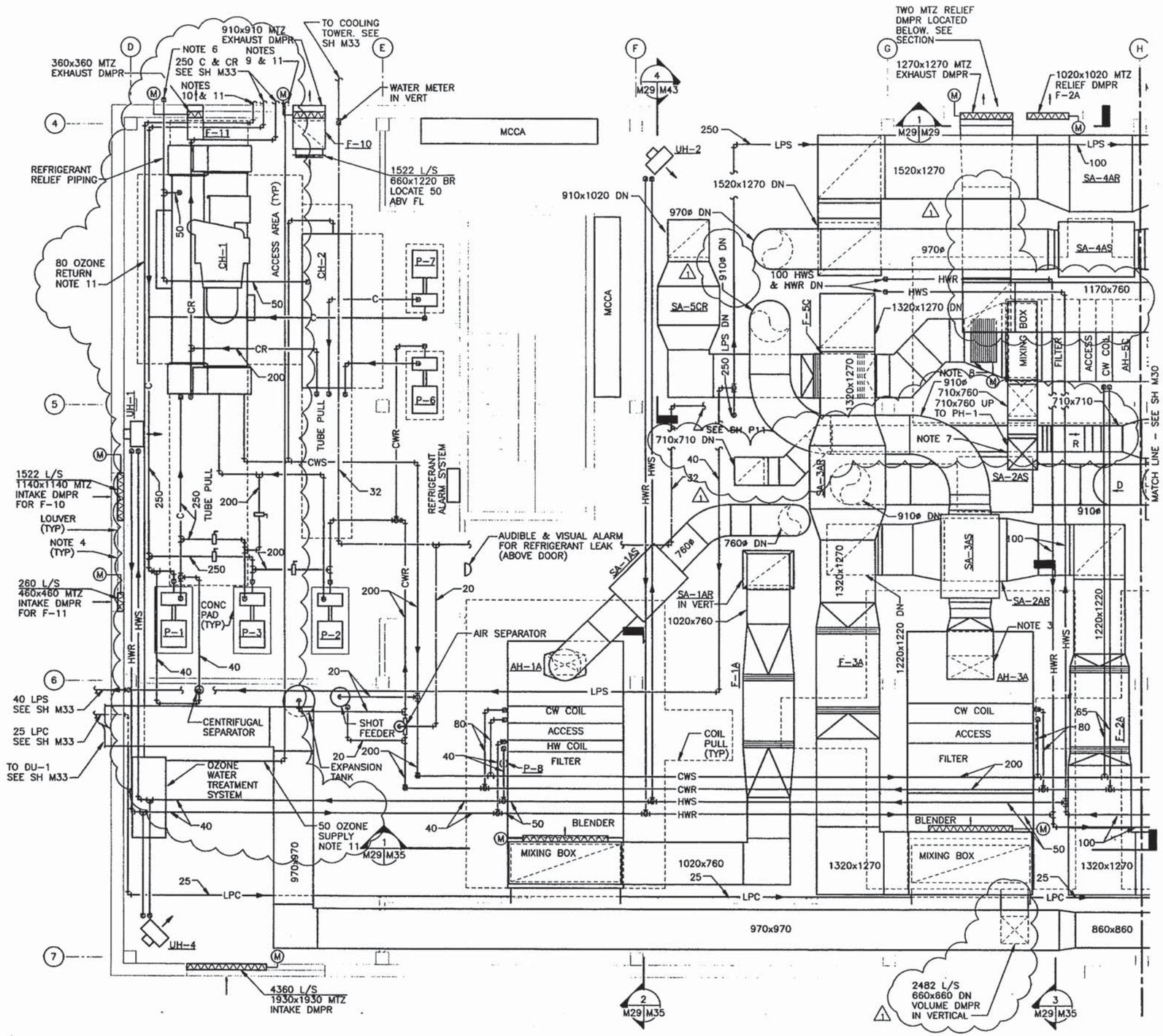

PENTHOUSE PARTIAL PLAN
SCALE: 1:50

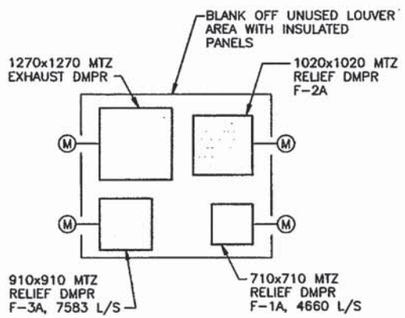

LOUVER SECTION 1
SCALE: 1:50

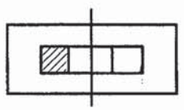

KEYPLAN

1:50 0 1m 5m

GRAPHIC SCALE

REVISIONS

	DATE	APPROVED
REVISED LAYOUT	6/98	ABC

H.S.M.M./C.C.A.

NAVAL FACILITIES ENGINEERING COMMAND NORFOLK, VIRGINIA

ATLANTIC DIVISION

DEPARTMENT OF THE NAVY NAVAL STATION NAVBASE NORFOLK

RENOVATION OF BUILDING 7133

PENTHOUSE PARTIAL PLAN

CODE ID. NO. 81091 SIZE D

SCALE: AS NOTED

CTG NO. 47123

SEA. PROJ. NO. P-971

SPEC. NO. 0968076

CONSTR. CONTR. NO. N62470-96-B-6076

HVAC DRAWING NO. 437123

SHEET 227 OF 229

M29

6076M029 C1786 JU1898 REV. M ACAD KMV PLOT SCALE: 1=1 XREF: 6076-X06

ALL DIMENSIONS ARE MILLIMETERS UNLESS OTHERWISE SHOWN

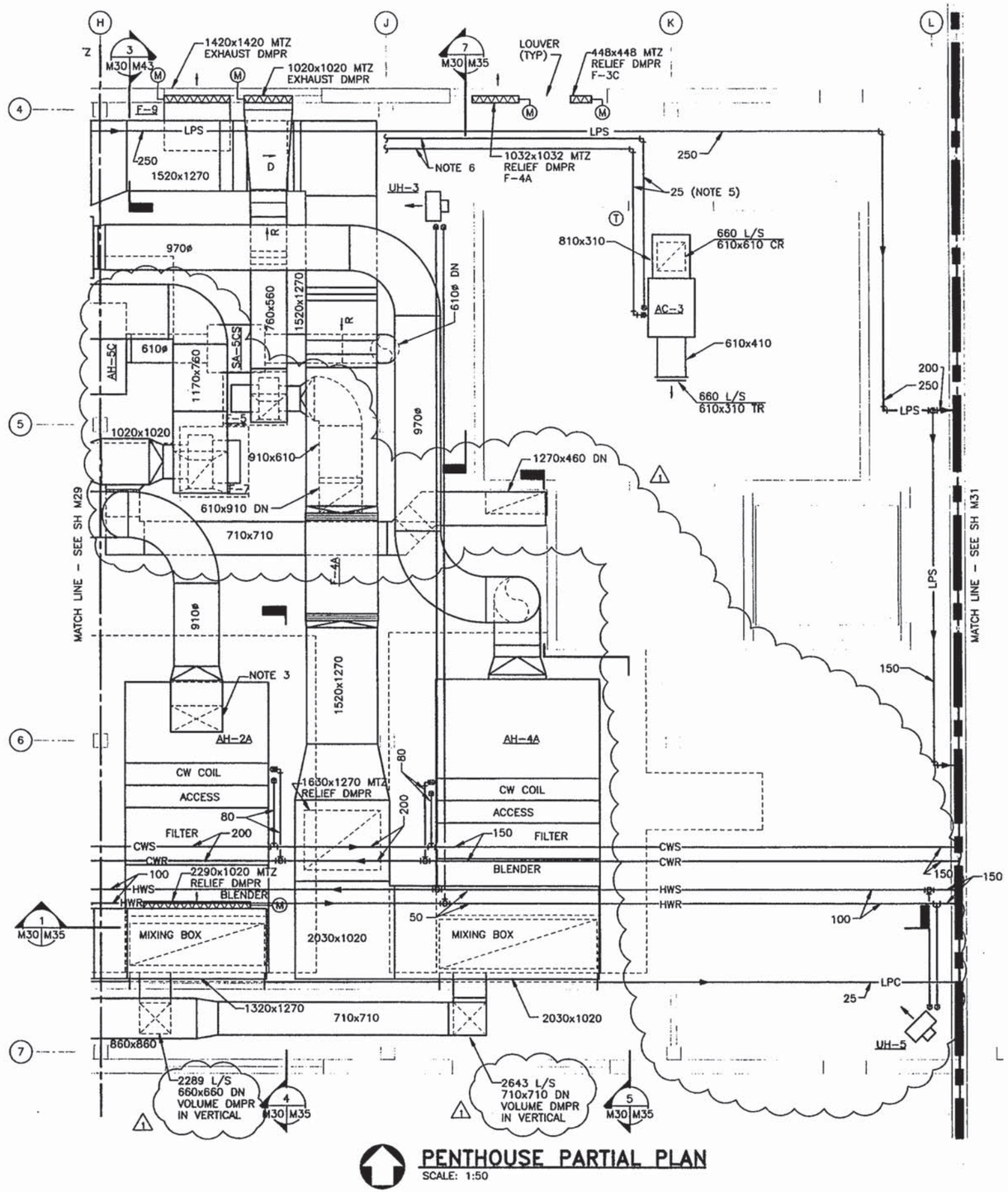

PENTHOUSE PARTIAL PLAN

SCALE: 1:50

NOTES:

1. SEE SHEET M1 FOR LEGEND AND GENERAL NOTES.
2. DUCT SILENCERS SHALL BE INSTALLED CENTERED IN THE LENGTH OF STRAIGHT RUN SHOWN.
3. DISCHARGE ELBOW SHALL BE FULL SIZE OF AH CONNECTION.
4. BLANK OFF ANY UNUSED LOUVER AREA WITH INSULATED PANELS (TYPICAL OF ALL).
5. REFRIGERANT PIPING. VERIFY PIPE SIZES WITH EQUIPMENT MANUFACTURER'S RECOMMENDATIONS.
6. SEE SHEET M33 FOR CONTINUATION.
7. OA INTAKE DUCT SHALL TRANSITION TO FULL SIZE OF AH CONNECTION.

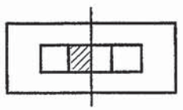

KEYPLAN

1:50 0 1m 5m

GRAPHIC SCALE

REVISIONS

1	REVISED LAYOUT	6/98	ABC

DEPARTMENT OF THE NAVY — NAVAL FACILITIES ENGINEERING COMMAND
ATLANTIC DIVISION, NORFOLK, VIRGINIA
NAVAL STATION NAVBASE NORFOLK

RENOVATION OF BUILDING Z133

PENTHOUSE PARTIAL PLAN

H.S.M.M./C.C.A.

CODE ID. NO. 80091 SIZE D
SCALE: AS NOTED
EFD NO. 471 24
EFA PROJ. NO. 2-69
SPEC. NO. 05986276
CONTR. CONTR. NO. N6247-91-B-3076
UNIFAC DRAWING NO. 4371 24
SHEET 228 OF 228

M30

6076M029 C1786 JU1898 REV. M ACAD KMV PLOT SCALE: 1=1 XREF: 6076-X06

ALL DIMENSIONS ARE MILLIMETERS UNLESS OTHERWISE SHOWN

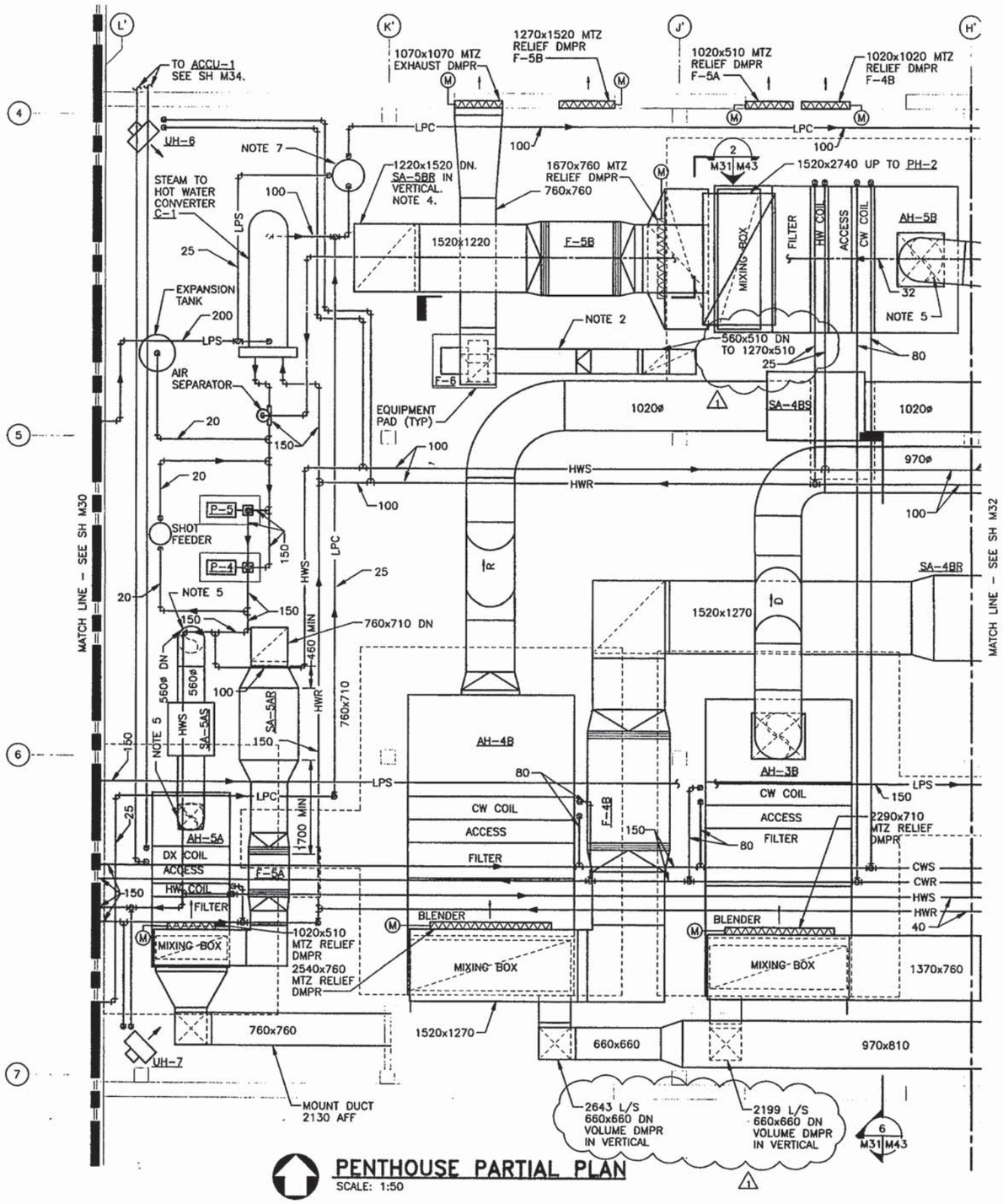

PENTHOUSE PARTIAL PLAN

SCALE: 1:50

NOTES:

1. SEE SHEET M1 FOR LEGEND AND GENERAL NOTES.
2. FULL SIZE OF FAN INLET. MINIMUM LENGTH OF ONE FAN DIAMETER.
3. BLANK OFF ANY UNUSED LOUVER AREA WITH INSULATED PANELS (TYPICAL OF ALL).
4. 1600 MIN BETWEEN SA-5BR INLET AND ELBOW UPSTREAM OF SA-5BR.
5. PROVIDE RADIUS ELBOW EQUAL TO DIAMETER OF DUCT.
6. OA INTAKE DUCT SHALL TRANSITION TO FULL SIZE OF AH CONNECTION CONNECTION.
8. PROVIDE PRESSURE POWERED PUMP FOR CONDENSATE FROM C-1 AND DU-1.

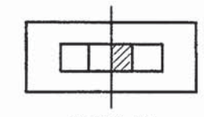

KEYPLAN

1:50 0 1m 5m

GRAPHIC SCALE

REVISIONS			
1	REVISED LAYOUT	6/98	ABC

DESIGN ABC, DRAWN RMV, REVIEW RSB, CHIEF DESIGNER BJF, PROJECT MANAGER, FIRE PROTECTION, BRANCH MANAGER

H.S.M.M./C.C.A. HAYES, SEAY, MATTERN & MATTERN, INC./ CROSTON COLLABORATIVE, ARCHITECTS
ARCHITECTS • ENGINEERS • PLANNERS • INTERIOR DESIGNERS

APPROVED ACTIVITY - SATISFACTORY TO DATE
POWER - DATE 5-13-98

DEPARTMENT OF THE NAVY — NAVAL FACILITIES ENGINEERING COMMAND — ATLANTIC DIVISION — NORFOLK, VIRGINIA
NAVAL STATION NAVBASE NORFOLK — NORFOLK, VA

RENOVATION OF BUILDING Z133

PENTHOUSE PARTIAL PLAN

CODE ID. NO. 80091 | SIZE D
SCALE: AS NOTED
EFD NO. 471125
SEA PROJ. NO. P-671
SPEC. NO. 05966075
CONSTR. CONTR. NO. N62470-96-B-6076
NAVFAC DRAWING NO. 4371125
SHEET 829 OF 300

M31

ALL DIMENSIONS ARE MILLIMETERS UNLESS OTHERWISE SHOWN

NOTES:

1. SEE SHEET M1 FOR LEGEND AND GENERAL NOTES.
2. DUCT SILENCERS SHALL BE INSTALLED CENTERED IN THE LENGTH OF STRAIGHT RUN SHOWN.
3. DISCHARGE ELBOW SHALL BE FULL SIZE OF AH CONNECTION.
4. BLANK OFF ANY UNUSED LOUVER AREA WITH INSULATED PANELS (TYPICAL OF ALL).
5. PROVIDE RADIUS ELBOW EQUAL TO DIAMETER OF DUCT.
6. OA INTAKE DUCT SHALL TRANSITION TO FULL SIZE OF AH CONNECTION CONNECTION.

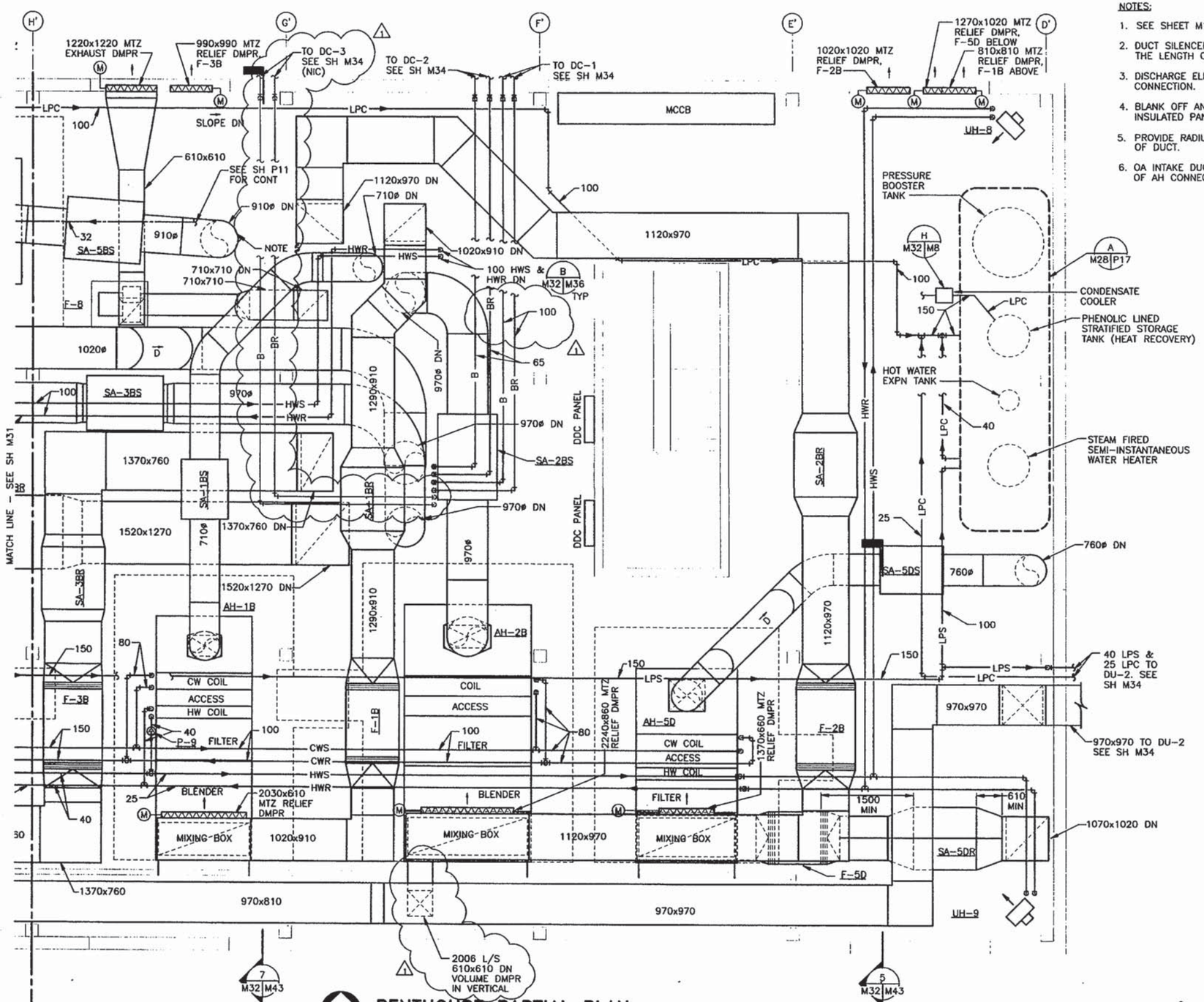

PENTHOUSE PARTIAL PLAN
SCALE: 1:50

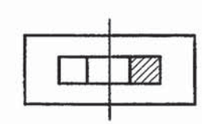

KEYPLAN

1:50 0 1m 5m

GRAPHIC SCALE

REVISIONS

DATE	DESCRIPTION	INIT.
9/99	REVISED DRAWING	

DESIGN ABC KMV RSB
DRAWN JTT
PROJECT MANAGER
FIRE PROTECTION
BRANCH MANAGER
DESIGN DIRECTOR

H.S.M.M./C.C.A.
HAYES, STAPE, MATSON & MATSON, INC./ CROXTON COLLABORATIVE, ARCHITECTS

ACTIVITY - SATISFACTORY TO
DATE 3/26/99

DEPARTMENT OF THE NAVY
NAVAL STATION
NAVBASE NORFOLK
ATLANTIC DIVISION
NAVAL FACILITIES ENGINEERING COMMAND
NORFOLK, VIRGINIA

RENOVATION OF BUILDING 2755

PENTHOUSE PARTIAL PLAN

CODE ID. NO. 86001 SIZE D
SCALE: AS NOTED
EFD NO. 4711126
SSA PROJ. NO. P-671
SPEC. NO. 0596076-
CONTR. CONTR. NO. N62470-96-B-6076
NAVFAC DRAWING NO. 4311126
SHEET 2 OF 206
M32

6076M031 C1786 JU2998 REV. L ACAD KMV PLOT SCALE: 1=1 XREF: 6076-X06

ALL DIMENSIONS ARE MILLIMETERS UNLESS OTHERWISE SHOWN

NOTES THIS SHEET:

1. SEE SHEET M1 FOR LEGEND AND GENERAL NOTES.
2. FD IN ROOF.
3. HEAT TRACE AND INSULATE ALL CONDENSATE PIPE LOCATED OUTDOORS.
4. DUCT SIZE IS APPROXIMATE. PROVIDE DUCT OF EQUIVALENT CROSS SECTIONAL AREA AS EXISTING.
5. DUCTWORK LOCATED BELOW PENTHOUSE FLOOR AND ABOVE FIFTH FLOOR ROOF.
6. REFRIGERANT PIPING. VERIFY PIPE SIZES WITH EQUIPMENT MANUFACTURER'S RECOMMENDATIONS.
7. SEE SH M30 FOR CONT.
8. SEE SH M27 FOR CONT.
9. RELOCATED EQUIPMENT AND ASSOCIATED DUCTWORK ARE FOR TEMPORARY AIR CONDITIONING OF THE FIFTH FLOOR. ALL EXISTING AND RELOCATED EQUIPMENT AND DUCTWORK SHALL BE REMOVED WHEN NEW FIFTH FLOOR HVAC IS IN PLACE. COORDINATE WITH PHASING PLANS.
10. PAINT COOLING TOWER TO MATCH PENTHOUSE WALL. ELEVATE COOLING TOWER ABOVE CONDENSER PUMP SUCTION.
11. HEAT TRACE AND INSULATE ALL EXTERIOR CONDENSER WATER AND MAKE-UP WATER PIPING LOCATED OUTDOORS.
12. VERIFY PIPE SIZE WITH OZONE SYSTEM MANUFACTURER.

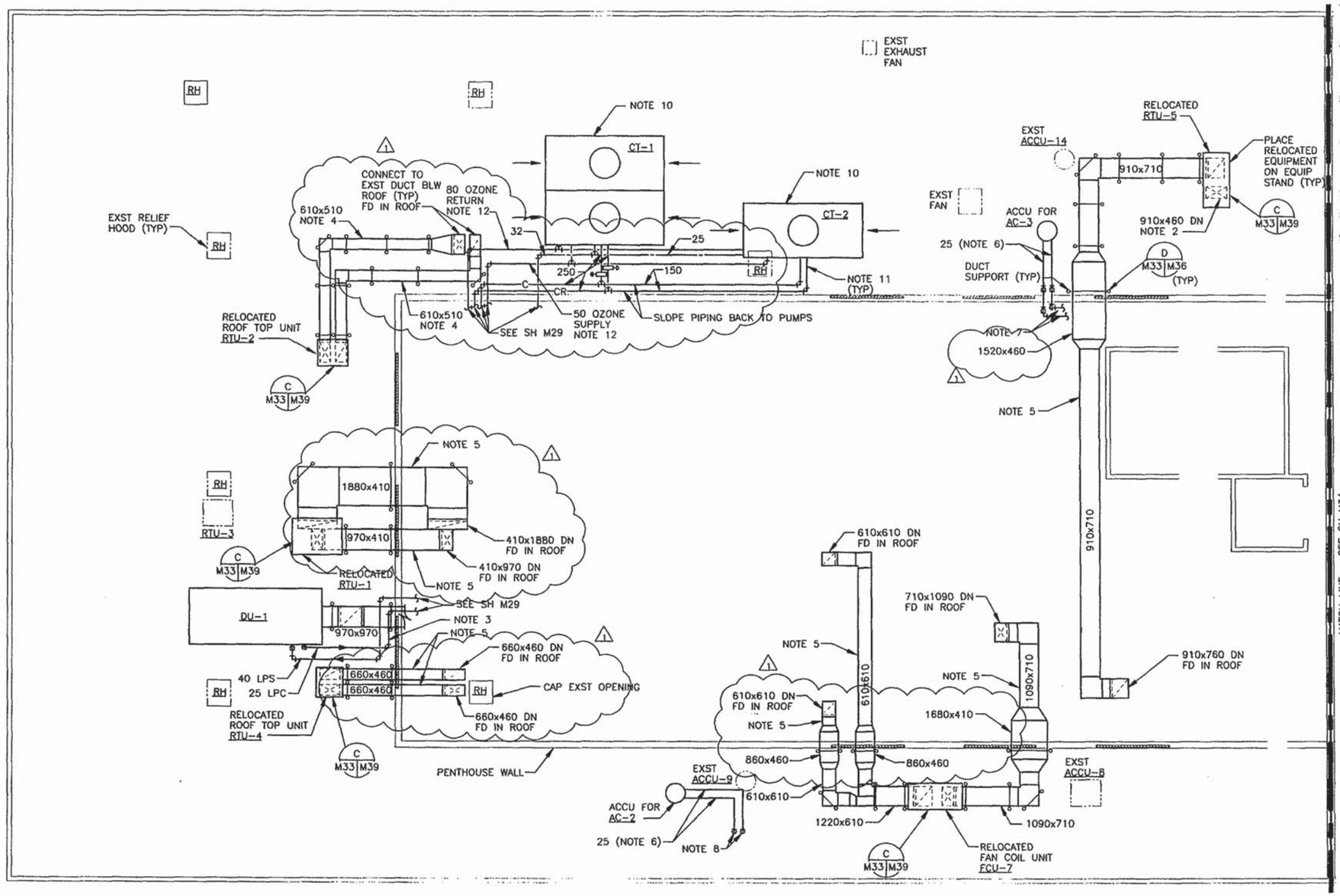

MECHANICAL ROOF PLAN - AREA A

SCALE: 1:100

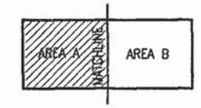

KEYPLAN

1:100 0 1m 2m 3m 4m 5m 10m

GRAPHIC SCALE

REVISIONS			
		6/98	ABC
1	REVISED LAYOUT		

ABC DESIGN · KMV DRAWN · RSB REVIEW · BJF QC · PROJECT MANAGER · BRANCH MANAGER · DESIGN DATE 3-19-98

H.S.M.M./C.C.A. HUNT, SLOY, MATHERS & MATSON, INC./ CROW, CUSHING & ASSOCIATES, INC. ARCHITECTS • ENGINEERS • PLANNERS • INTERIOR DESIGNERS

APPROVED · DATE · ACTIVITY - SATISFACTORY TO · FOR IFB FOR COMMAND USE

DEPARTMENT OF THE NAVY · NAVAL FACILITIES ENGINEERING COMMAND · ATLANTIC DIVISION · NORFOLK, VIRGINIA · NAVAL STATION NAVBASE NORFOLK · NORFOLK, VA

RENOVATION OF BUILDING Z133

MECHANICAL ROOF PLAN - AREA A

CODE ID. NO. 80091 · SIZE D · SCALE: AS NOTED · STD NO. 471127 · STA. PROJ. NO. Z-67 · SPEC. NO. 05866076 · CONSTR. CONTR. NO. N62470-96-B-0076 · NAVFAC DRAWING NO. 4371127 · SHEET Z37 OF 342

M33

XREF: 6076-XRF · PLOT SCALE: 1=1 · KMV · ACAD · REV. J · JU0198 · C1786 · 6076M033

ALL DIMENSIONS ARE MILLIMETERS UNLESS OTHERWISE SHOWN

NOTES THIS SHEET:

1. SEE SHEET M1 FOR LEGEND AND GENERAL NOTES.
2. DUCTWORK LOCATED BELOW PENTHOUSE FLOOR AND ABOVE FIFTH FLOOR ROOF.
3. REFRIGERANT PIPING. VERIFY PIPE SIZES WITH EQUIPMENT MANUFACTURER'S RECOMMENDATIONS.
4. SEE SH M28 FOR CONT.
5. REFRIGERANT PIPING. VERIFY PIPE SIZES WITH EQUIPMENT MANUFACTURER'S RECOMMENDATIONS.
6. RELOCATED EQUIPMENT AND ASSOCIATED DUCTWORK ARE FOR TEMPORARY AIR CONDITIONING OF THE FIFTH FLOOR. ALL EXISTING AND RELOCATED EQUIPMENT AND DUCTWORK SHALL BE REMOVED WHEN NEW FIFTH FLOOR HVAC IS IN PLACE. COORDINATE WITH PHASING PLANS.
7. HEAT TRACE AND INSULATE ALL CONDENSATE PIPE LOCATED OUTDOORS.

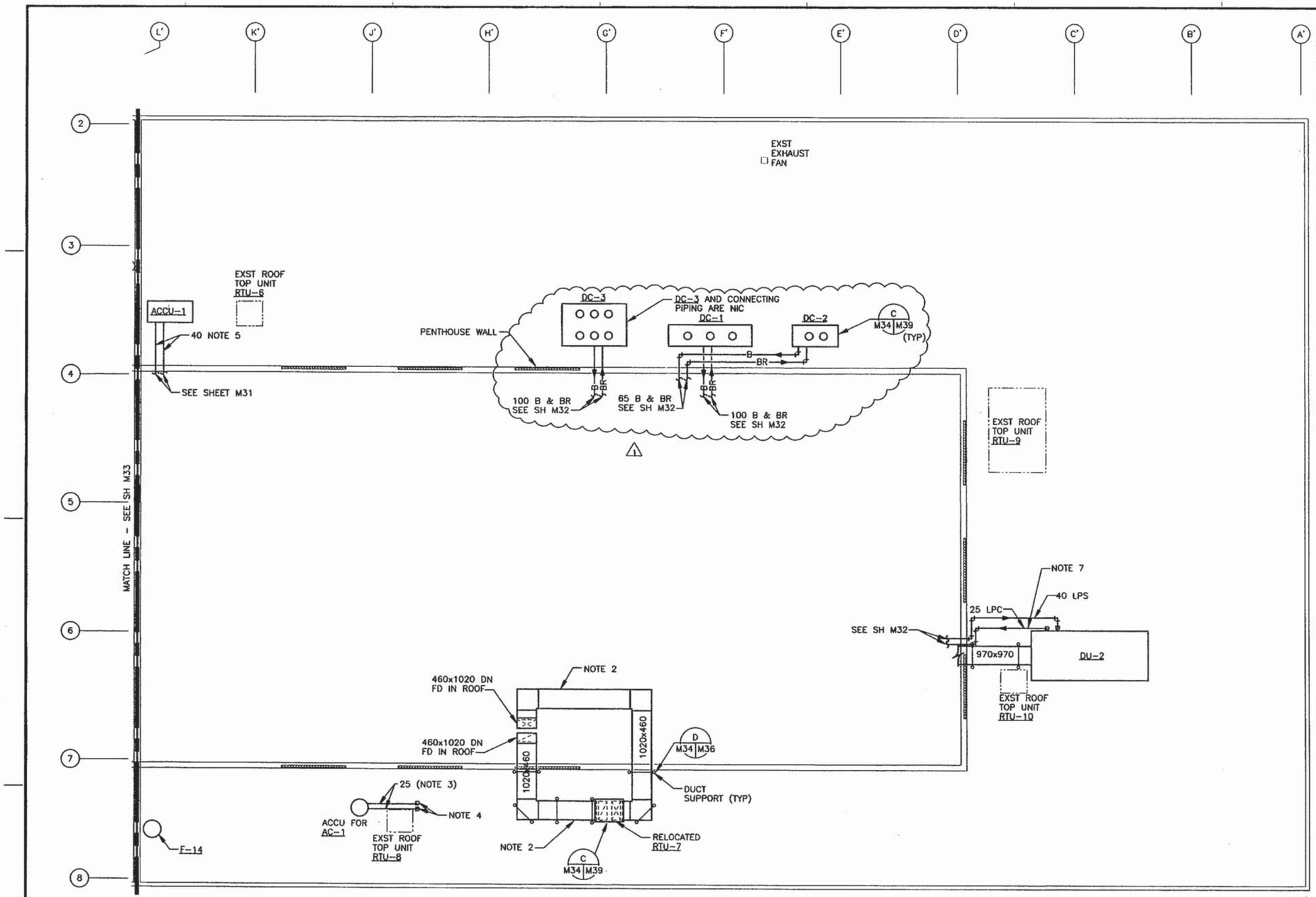

MECHANICAL ROOF PLAN – AREA B

SCALE: 1:100

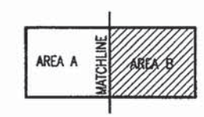

KEYPLAN

1:100 0 1m 2m 3m 4m 5m 10m

GRAPHIC SCALE

REVISIONS

1 REVISED LAYOUT 6/98 ABC

H.S.M.M./C.C.A. HUNTER SMITH MARTIN & MORROW, INC./ CROSTON COLLABORATIVE, ARCHITECTS

ARCHITECTS • ENGINEERS • PLANNERS • INTERIOR DESIGNERS

DEPARTMENT OF THE NAVY — NAVAL FACILITIES ENGINEERING COMMAND — ATLANTIC DIVISION — NAVAL STATION NORFOLK — NAVBASE NORFOLK, NORFOLK, VA

RENOVATION OF BUILDING Z133

MECHANICAL ROOF PLAN – AREA B

CODE ID. NO. 80009 SIZE D

SCALE: AS NOTED

DWG NO. 471128

EFD PROJ. NO. P-671

SPEC. NO. 05956005

CONTR. CONTR. NO. N62470-96-B-5076

MASTER DRAWING NO. 4371128

SHEET 242 OF 348

M34

6076M033 C1786 JU2998 REV. K ACAD KMV PLOT SCALE: 1=1 XREF: 6076-XRF

ALL DIMENSIONS ARE MILLIMETERS UNLESS OTHERWISE SHOWN

NOTES THIS SHEET:

1. SEE SHEET M1 FOR LEGEND AND GENERAL NOTES.

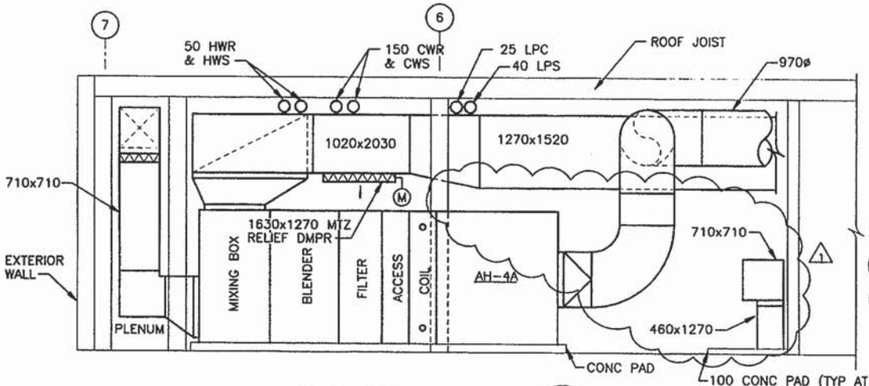

SECTION 5
SCALE: 1:50
M30 | M35

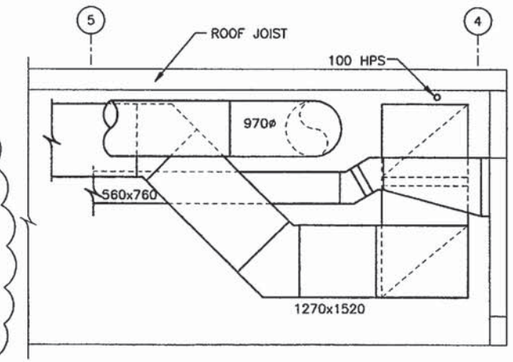

SECTION 7
SCALE: 1:50
M30 | M35

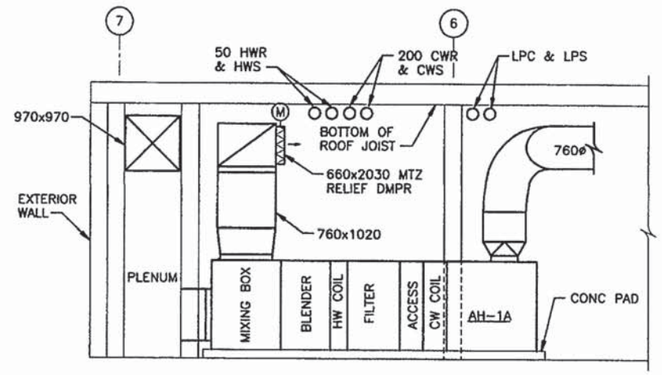

SECTION 2
SCALE: 1:50
M29 | M35

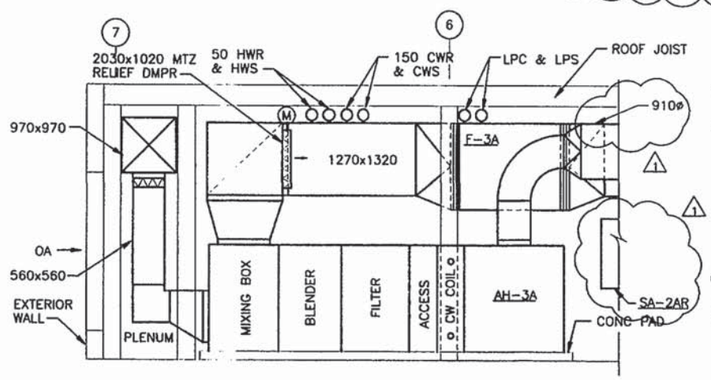

SECTION 3
SCALE: 1:50
M29 | M35

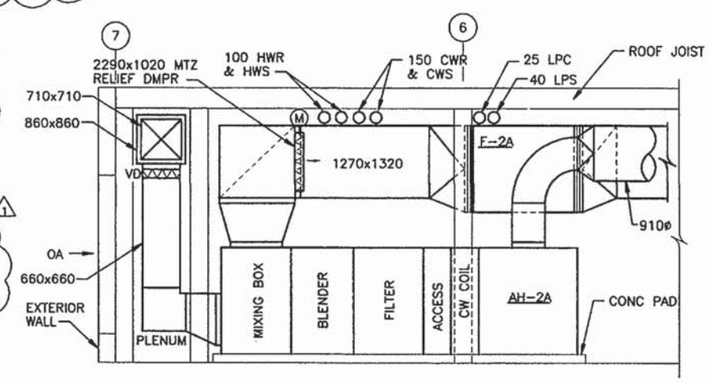

SECTION 4
SCALE: 1:50
M30 | M35

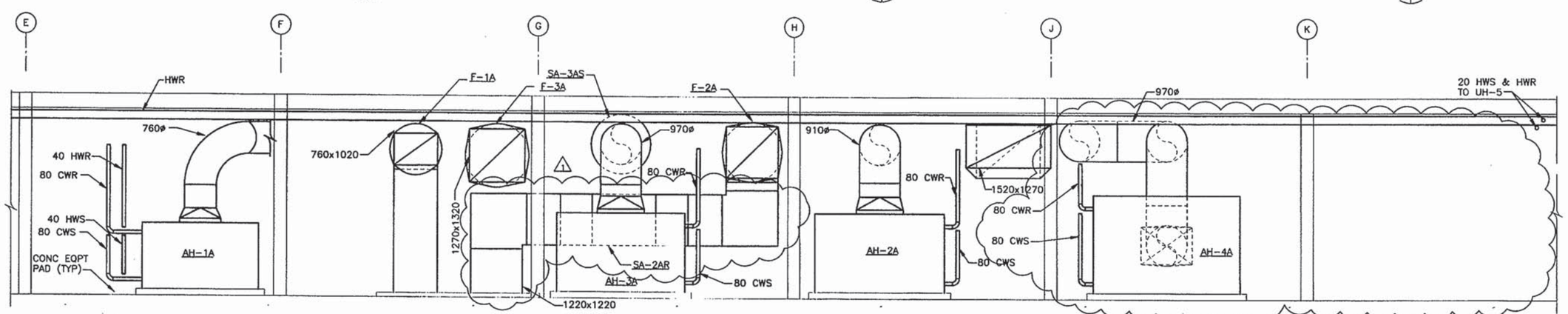

SECTION 1
SCALE: 1:50
M30 | M29 | M35

1:50 0 1m 5m
GRAPHIC SCALE

REVISIONS

DATE	DESCRIPTION	APPROVED
6/30	REVISED SECTIONS	ABC

DESIGN KMV
DRAWN KMV
REVIEW WTG
APPROVED ELF
CHIEF INDV DIV
FIRE PROTECTION
BRANCH MANAGER
DESIGN DIRECTOR

H.S.M.M./C.C.A.
HAYES, SEAY, MATTERN & MATTERN, INC./
CHAPPELLE, CLARKE & ASSOCIATES, INC.
ARCHITECTS • ENGINEERS • PLANNERS • INTERIOR DESIGNERS

DATE 3-19-98
FOR BID AND CONSTRUCTION

ALABAMA
PROFESSIONAL ENGINEER

NAVAL FACILITIES ENGINEERING COMMAND
NORFOLK, VIRGINIA
DEPARTMENT OF THE NAVY
ATLANTIC DIVISION
NAVAL STATION
NORFOLK, VA
NAVBASE NORFOLK

RENOVATION OF BUILDING 7433

PENTHOUSE SECTIONS

CODE ID. NO. 60091 SIZE D
SCALE: AS NOTED
EFD NO. 47 129
STA. PROJ. NO. P-671
SPEC. NO. 5966076
CONSTR. CONTR. NO. N62470-96-B-6076
NAVFAC DRAWING NO. 437 129
SHEET 233 OF 309

M35

XREF: NONE
PLOT SCALE: 1:1
ACAD KMV
REV. I
JU0998
C1786
6076M035

ALL DIMENSIONS ARE MILLIMETERS UNLESS OTHERWISE SHOWN

NOTES THIS SHEET:

1. SEE SHEET M1 FOR LEGEND AND GENERAL NOTES.

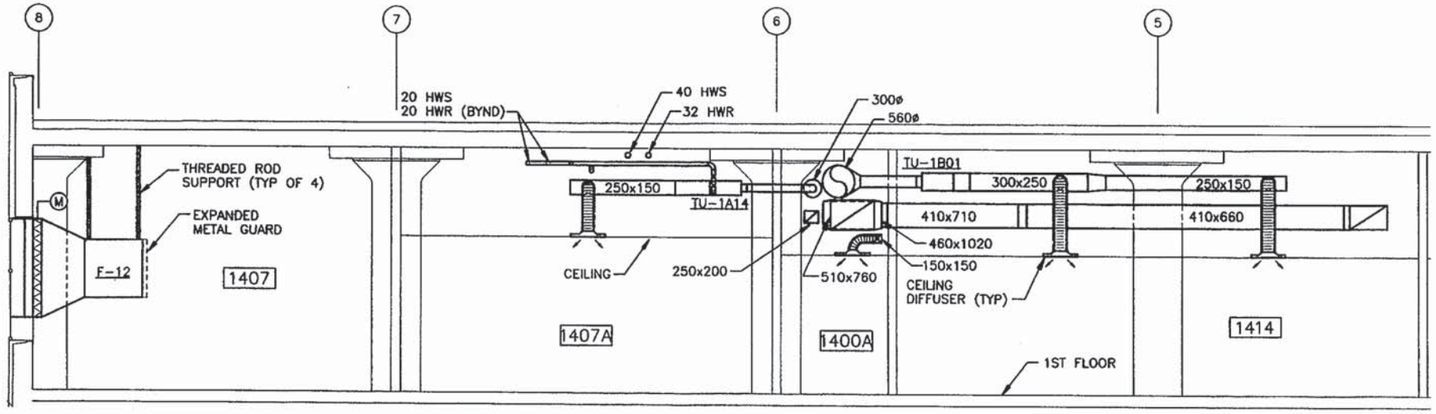

SECTION 1
SCALE: 1:50
M10 | M40
M20

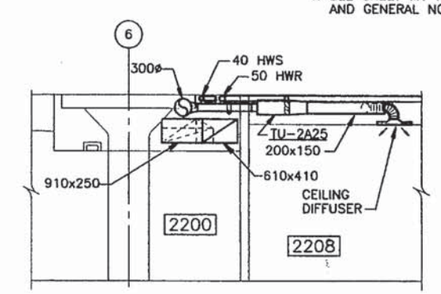

SECTION 2
SCALE: 1:50
M11 | M40
M21

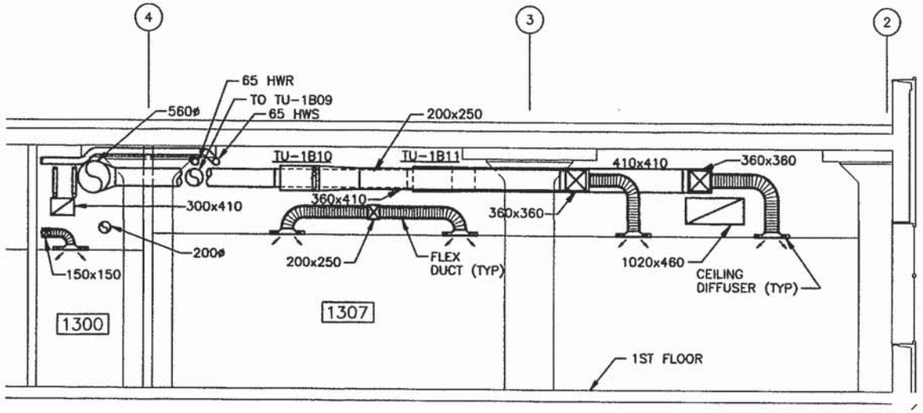

SECTION 3
SCALE: 1:50
M10 | M40
M20

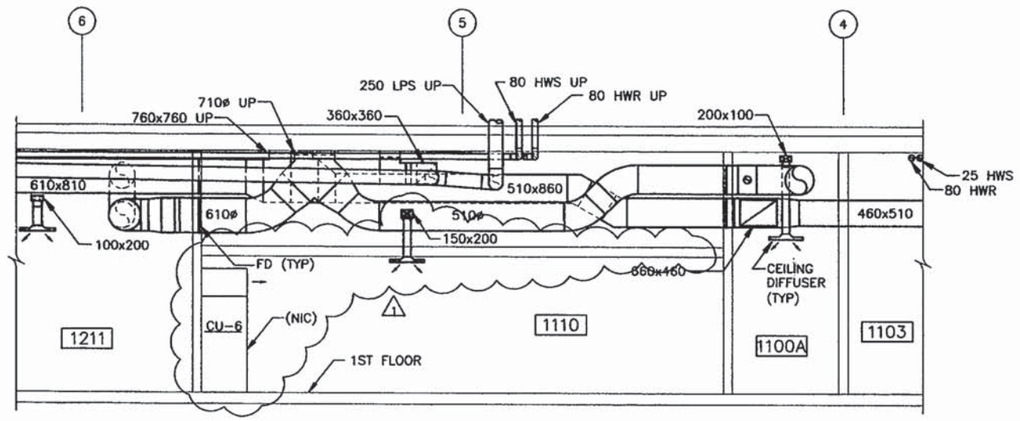

SECTION 4
SCALE: 1:50
M9 | M40
M19

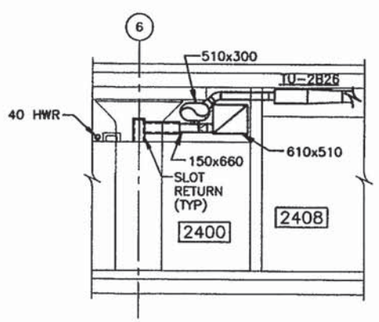

SECTION 5
SCALE: 1:50
M12 | M40
M22

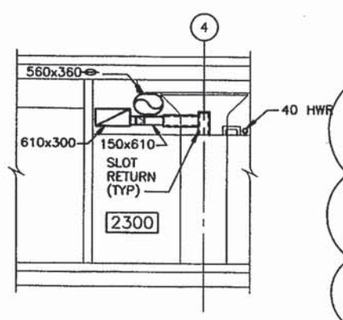

SECTION 6
SCALE: 1:50
M12 | M40
M22

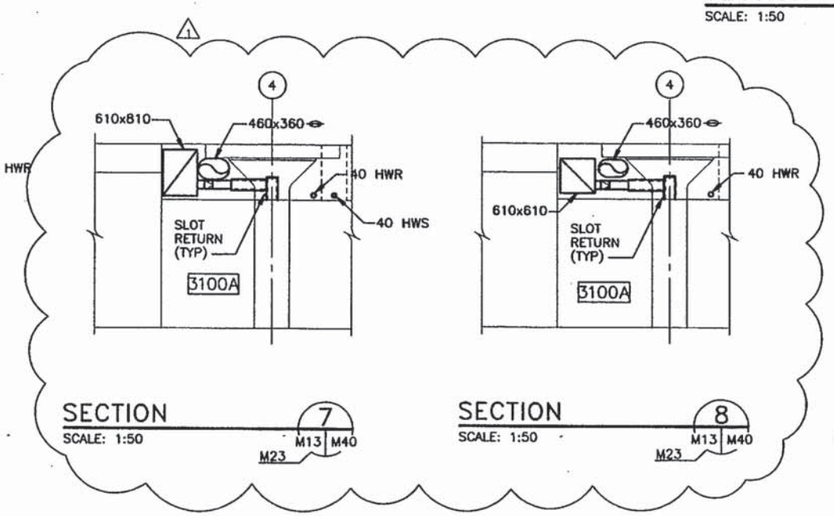

SECTION 7
SCALE: 1:50
M13 | M40
M23

SECTION 8
SCALE: 1:50
M13 | M40
M23

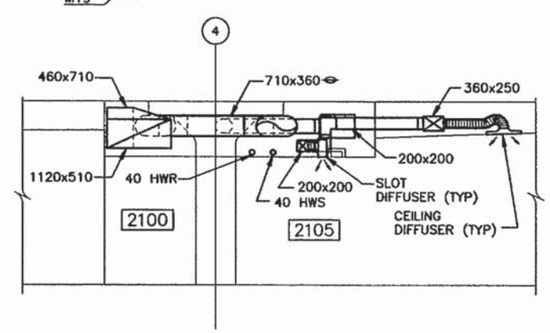

SECTION 9
SCALE: 1:50
M11 | M40
M21

1:50 0 1m 5m

GRAPHIC SCALE

REVISIONS			
1	REVISED SECTIONS	6/98	ABC

H.S.M.M./C.C.A.
HOFFMAN, STOTT, MOSKOWITZ, INC./ CONSTANT, CALDERONE, ASSOCIATES

ATLANTIC DIVISION, NAVAL FACILITIES ENGINEERING COMMAND, NORFOLK, VIRGINIA
DEPARTMENT OF THE NAVY
NAVAL STATION NAVBASE NORFOLK

RENOVATION OF BUILDING 2133

SECTIONS

CODE ID. NO. 80091 SIZE D
SCALE: AS NOTED
SYD NO. 7114
SYM. PROJ. NO. P-671
SPEC. NO. 05-66076
CONTRS. COMM. NO. N62470-96-B-6076
MAPTAC DRAWING NO. 437114
SHEET 25 OF 28

M40

XREF: 6076M040 C1786 JU2998 REV. G ACAD KMV PLOT SCALE: 1=1

ALL DIMENSIONS ARE MILLIMETERS UNLESS OTHERWISE SHOWN

NOTES THIS SHEET:

1. SEE SHEET M1 FOR LEGEND AND GENERAL NOTES.

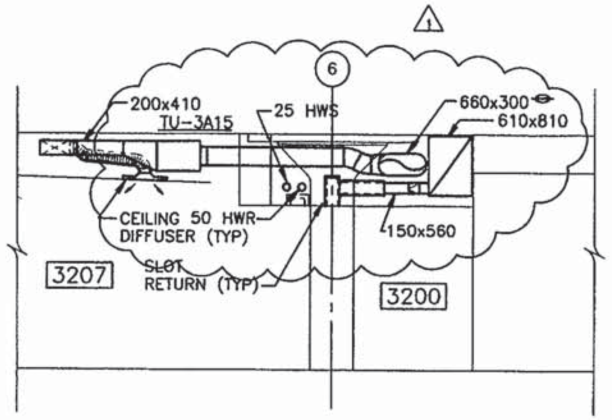

SECTION 1
SCALE: 1:50
M13 | M41
M23

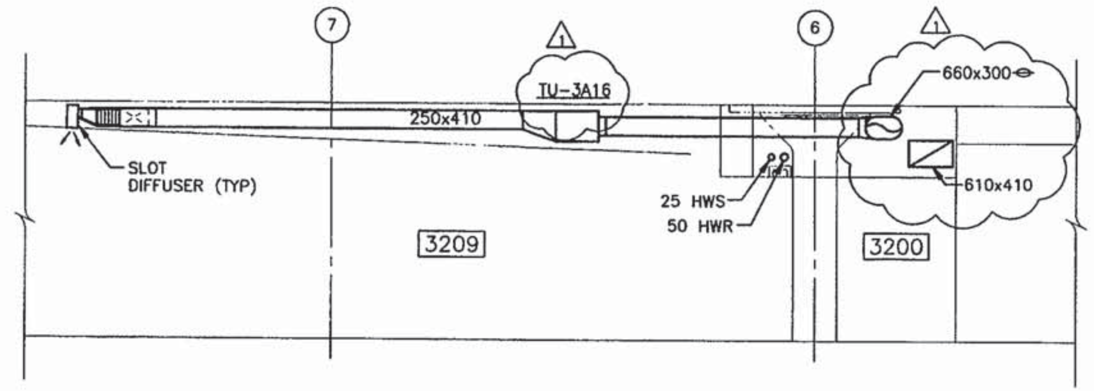

SECTION 2
SCALE: 1:50
M13 | M41
M23

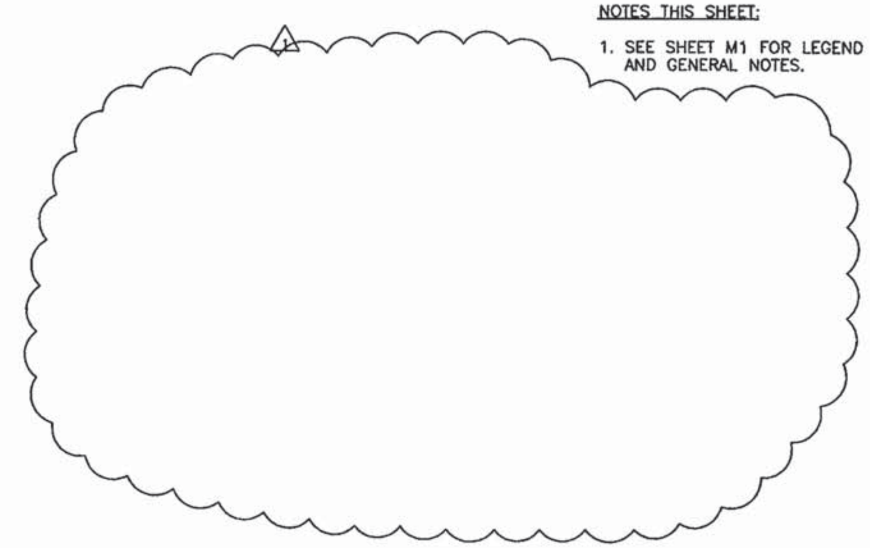

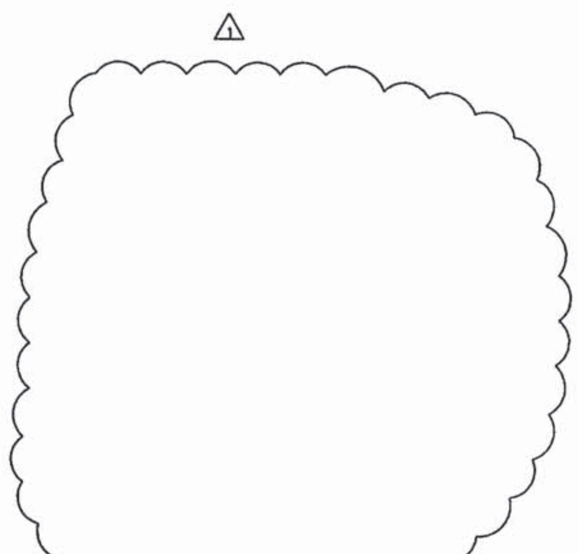

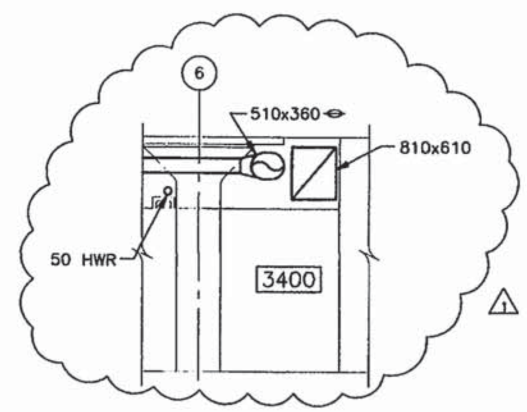

SECTION 5
SCALE: 1:50
M14 | M41
M24

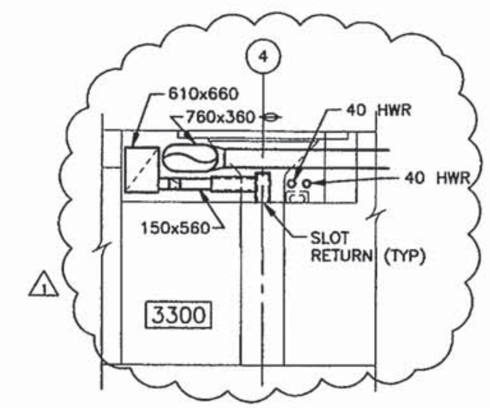

SECTION 6
SCALE: 1:50
M14 | M41
M24

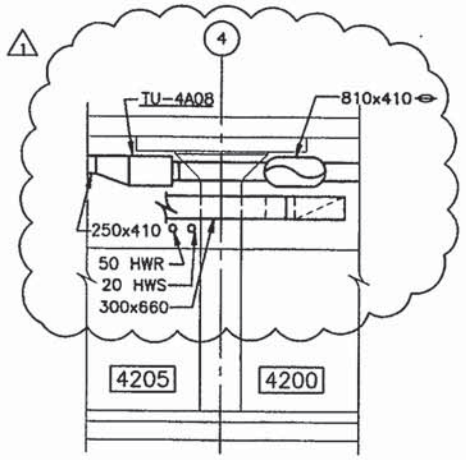

SECTION 7
SCALE: 1:50
M15 | M41
M25

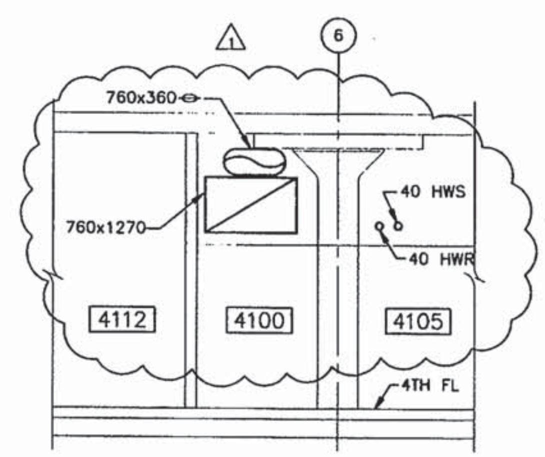

SECTION 8
SCALE: 1:50
M15 | M41
M25

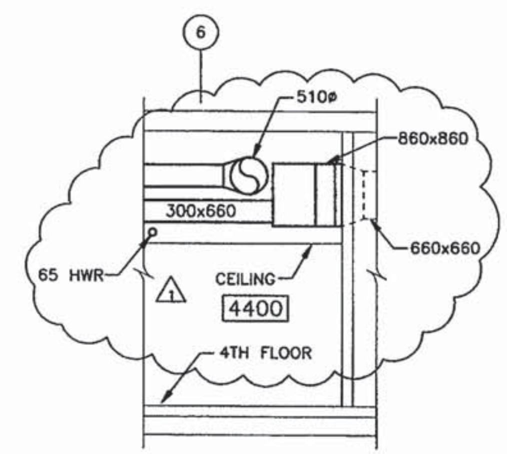

SECTION 9
SCALE: 1:50
M16 | M41
M26

1:50 0 1m 5m
GRAPHIC SCALE

REVISIONS
1 REVISED SECTIONS 6/98 ABC

JLK DESIGN
JLK DRAWN
RSB REVIEW JTT
BJF QC

H.S.M.M./C.C.A.
HAYES, SEAY, MATTERN & MATTERN, INC./ CROXTON COLLABORATIVE ARCHITECTS
ARCHITECTS • ENGINEERS • PLANNERS • INTERIOR DESIGNERS

DATE 3-19-98

DEPARTMENT OF THE NAVY
NAVAL FACILITIES ENGINEERING COMMAND
ATLANTIC DIVISION NORFOLK, VIRGINIA
NAVAL STATION
NAVBASE NORFOLK NORFOLK, VA
RENOVATION OF BUILDING Z133
SECTIONS

CODE ID. NO. 80091	SIZE D
SCALE: AS NOTED	
EFD NO. 471135	
STA. PROJ. NO. P-671	
SPEC. NO. 05986076	
CONSTR. CONTR. NO. N62470-96-B-6076	
NAVFAC DRAWING NO. 4371135	
SHEET 239 OF 308	
M41	

6076M041 C1786 JU099B REV. 1 ACAD KMV PLOT SCALE: 1=1 XREF:

ALL DIMENSIONS ARE MILLIMETERS UNLESS OTHERWISE SHOWN

NOTES THIS SHEET:

1. SEE SHEET M1 FOR LEGEND AND GENERAL NOTES.

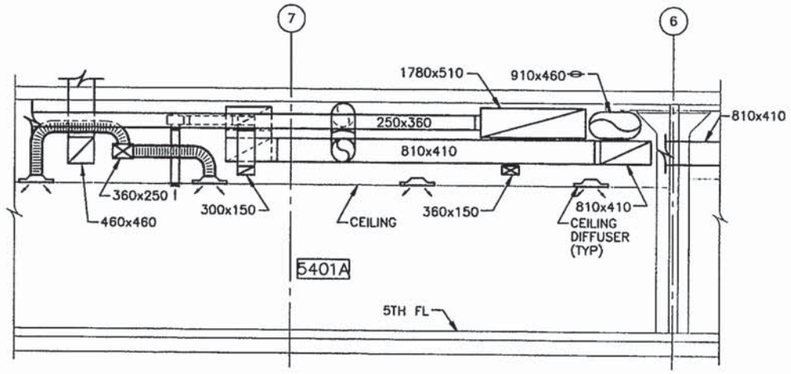

SECTION 6
SCALE: 1:50
M18 | M42
M28

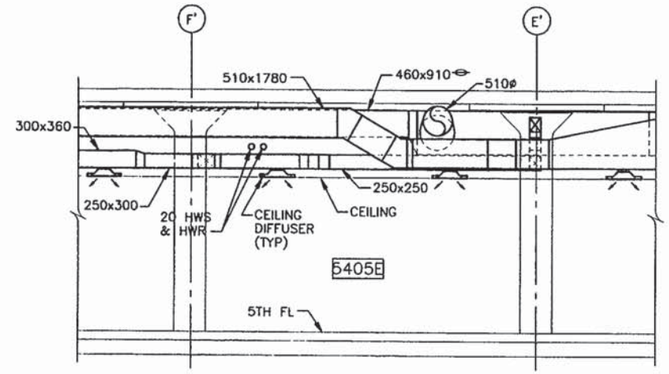

SECTION 7
SCALE: 1:50
M18 | M42
M28

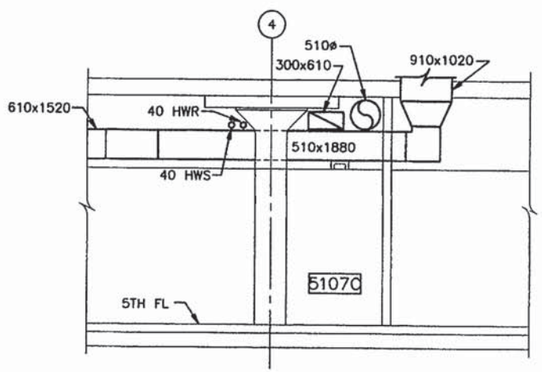

SECTION 2
SCALE: 1:50
M17 | M42
M27

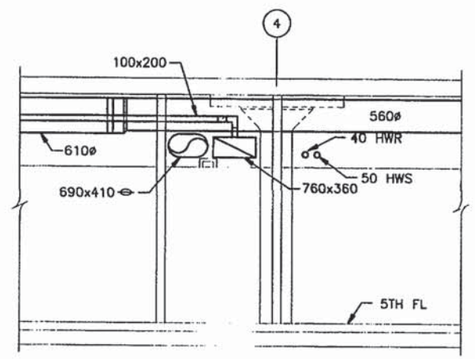

SECTION 3
SCALE: 1:50
M17 | M42
M27

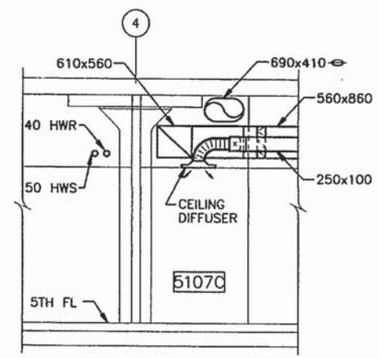

SECTION 4
SCALE: 1:50
M17 | M42
M27

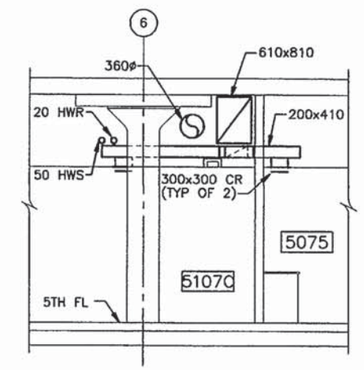

SECTION 5
SCALE: 1:50
M17 | M42
M27

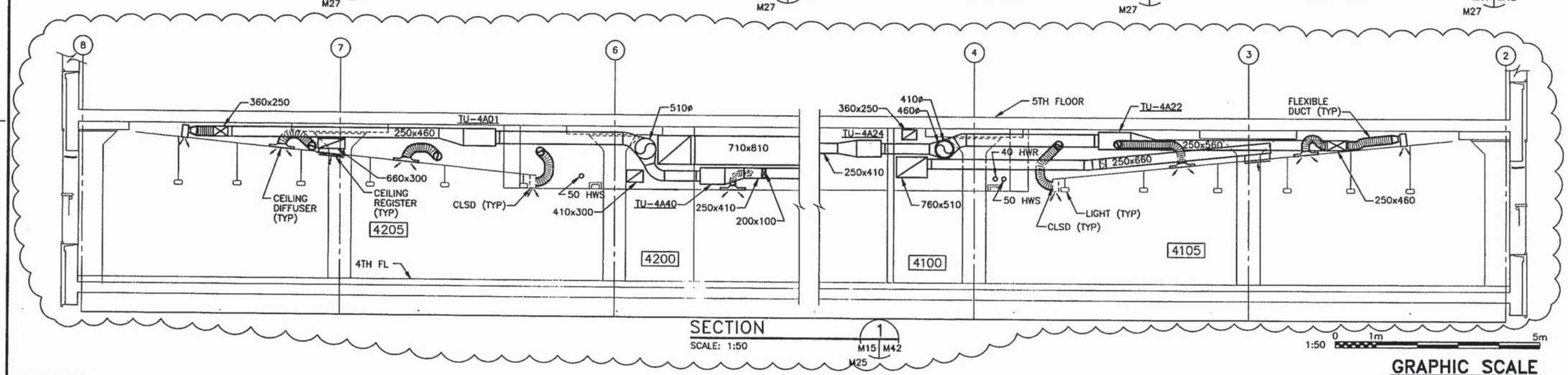

SECTION 1
SCALE: 1:50
M15 | M42
M25

1:50 0 1m 5m
GRAPHIC SCALE

REVISIONS			
1	REVISED SECTION	6/98	ABC
	DESCRIPTION	DATE	APPROVED

DSN KMV DRWN KMV REVIEW ESB CKD BJF PROJECT MANAGER / DESIGN MANAGER / DESIGN ARCHITECT

H.S.M.M./C.C.A.
HAYES, SEAY, MATTERN & MATTERN, INC. / CROSTON COLLABORATIVE, ARCHITECTS
ARCHITECTS • ENGINEERS • PLANNERS • INTERIOR DESIGNERS
APPROVED DATE
ACTIVITY – SATISFACTORY TO DATE
APPROVED
FOR ATLANTIC DIVISION, NAVFAC

NAVAL FACILITIES ENGINEERING COMMAND
ATLANTIC DIVISION
NORFOLK, VIRGINIA
DEPARTMENT OF THE NAVY
NAVAL STATION NORFOLK, VA
NAVBASE NORFOLK

RENOVATION OF BUILDING Z133

SECTIONS

CODE ID. NO. 80091 | SIZE D
SCALE: AS NOTED
EFD NO. 471135
EFA PROJ. NO. P-671
SPEC. NO. 059607
CONTRL CONTR. NO. N62470-96-B-6076
NAVFAC DRAWING NO. 4371136
SHEET 240 OF 201

M42

XREF: PLOT SCALE: 1=1 ACAD KMV REV. 1 JU0998 C1786 607GM042

ALL DIMENSIONS ARE MILLIMETERS UNLESS OTHERWISE SHOWN

NOTES THIS SHEET:

1. SEE SHEET M1 FOR LEGEND AND GENERAL NOTES.

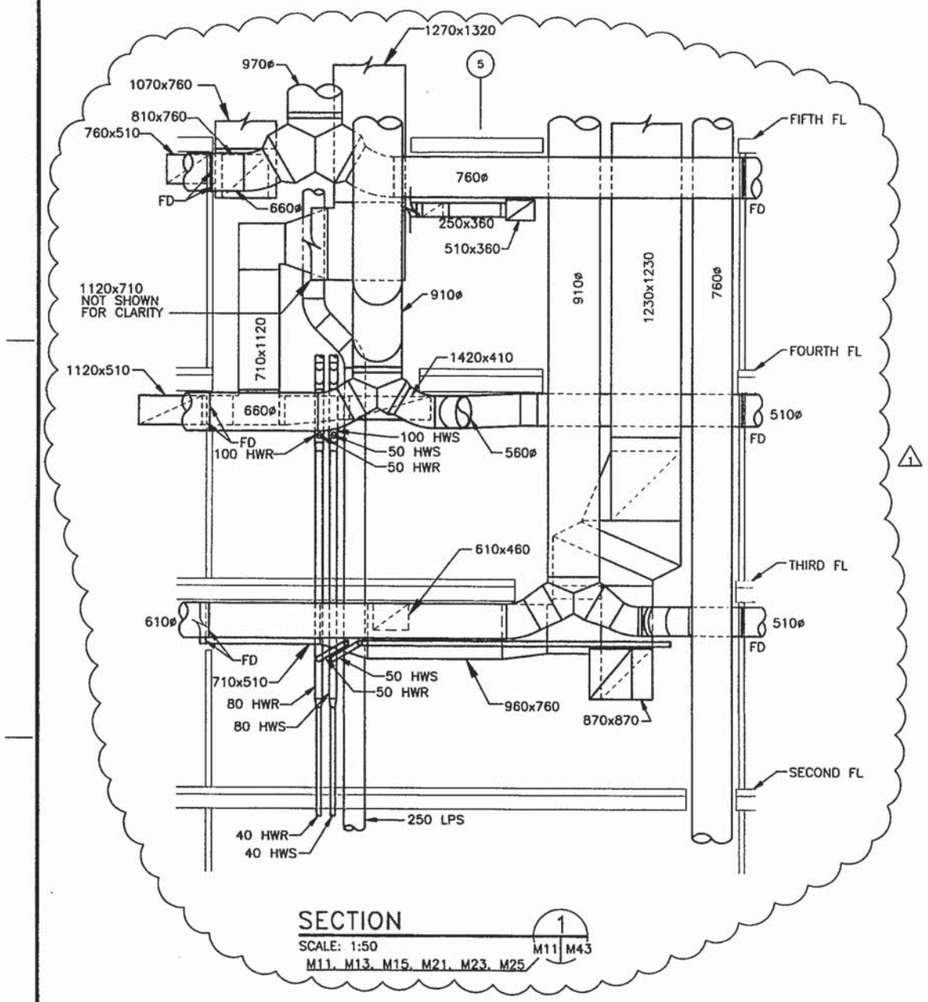

SECTION 1
SCALE: 1:50
M11, M13, M15, M21, M23, M25 | M11 | M43

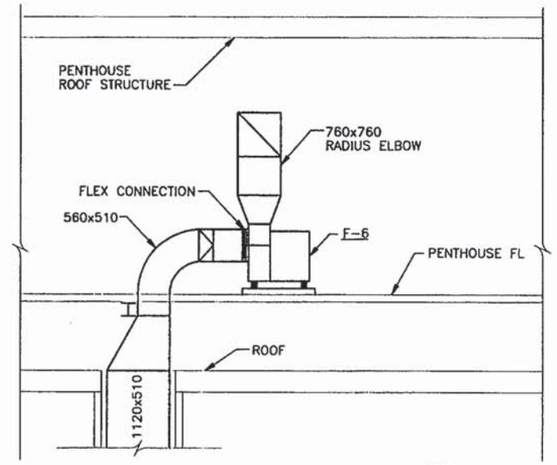

SECTION 2
SCALE: 1:50
M31 | M43

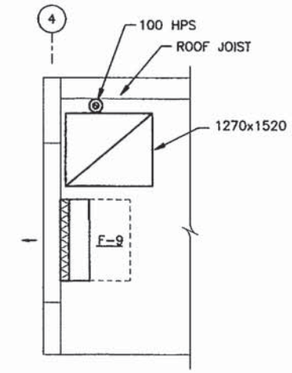

SECTION 3
SCALE: 1:50
M30 | M43

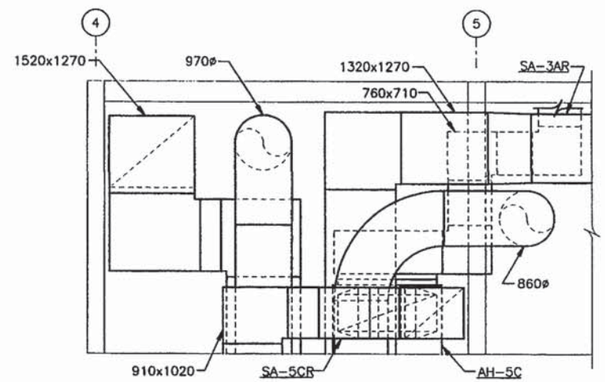

SECTION 4
SCALE: 1:50
M29 | M43

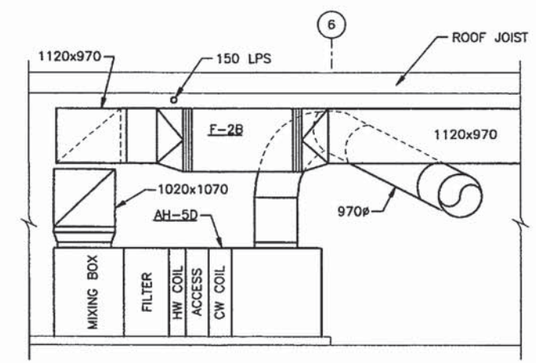

SECTION 5
SCALE: 1:50
M32 | M43

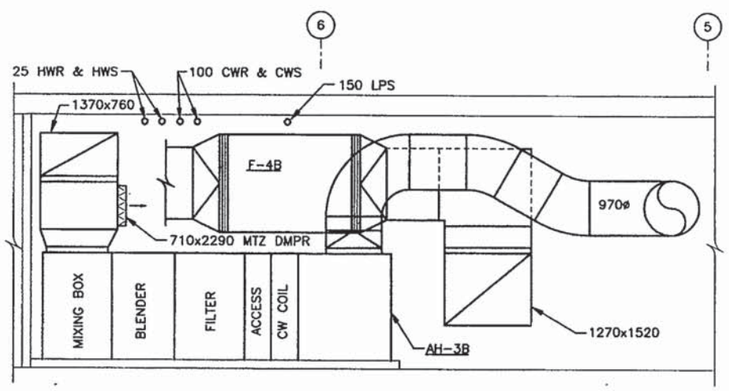

SECTION 6
SCALE: 1:50
M31 | M43

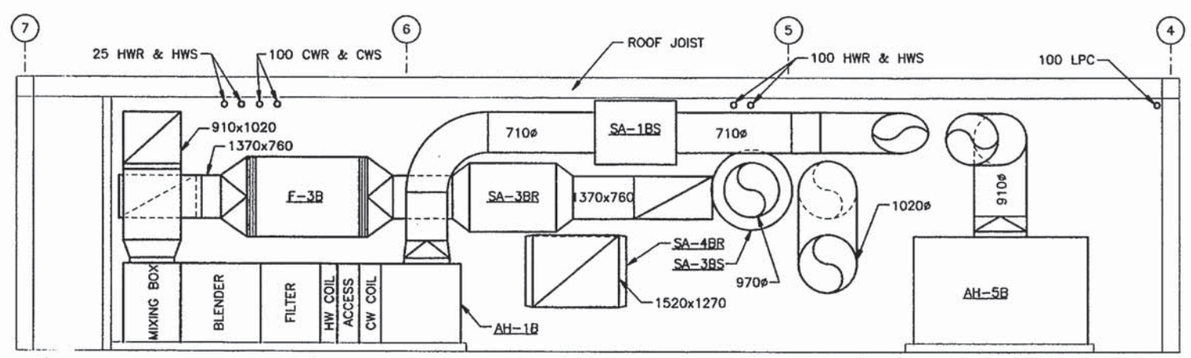

SECTION 7
SCALE: 1:50
M32 | M43

1:50 0 1m 5m
GRAPHIC SCALE

REVISIONS			
7	REVISED SECTION		07/30
DESCRIPTION		DATE	APPROVED

DESIGN JFW
DRAWN HSB
REVIEW WJG
QC RJF
ADV / DWG JTT

H.S.M.M./C.C.A.
HAYES, SEAY, MATTERN & MATTERN, INC. / CROUTCH COLLABORATIVE ARCHITECTS
ARCHITECTS • ENGINEERS • PLANNERS • INTERIOR DESIGNERS
APPROVED DATE

PROJECT MANAGER
CHIEF, DIVISION
MANAGER, NAVFAC
DESIGN DIRECTOR

ACTIVITY – SATISFACTORY TO
APPROVED DATE
CO STD DIRECTOR, NAVFAC

NAVAL FACILITIES ENGINEERING COMMAND
ATLANTIC DIVISION
NORFOLK, VIRGINIA
DEPARTMENT OF THE NAVY
NAVAL STATION NORFOLK
NAVBASE NORFOLK, VA

RENOVATION OF BUILDING 2133

SECTIONS

CODE ID. NO. 80091 | SIZE D
SCALE: AS NOTED
STD NO. 471137
STA. PROJ. NO. P 671
SPEC. NO. 05966076
CONTR. CONTR. NO. N62470-96-B-6876
NAVFAC DRAWING NO. 4371137
SHEET 241 OF 300

M43

XREF: 6076M043 C1786 JU0898 REV. G ACAD KMV PLOT SCALE: 1=1

ALL DIMENSIONS ARE MILLIMETERS UNLESS OTHERWISE SHOWN

SEQUENCE OF OPERATION

1 AH-1A AND F-1A CONTROL:
(TYPICAL FOR AH-1B AND F-1B)
(TYPICAL FOR AH-2A AND F-2A)
(TYPICAL FOR AH-2B AND F-2B)
(TYPICAL FOR AH-3A AND F-3A)
(TYPICAL FOR AH-3B AND F-3B)

(TYPICAL FOR AH-4A AND F-4A)
(TYPICAL FOR AH-4B AND F-4B)
(TYPICAL FOR AH-5B AND F-5B)
(TYPICAL FOR AH-5C AND F-5C)
(TYPICAL FOR AH-5D AND F-5D)

1.1 START/STOP: THE DDC SYSTEM SHALL ENERGIZE AH-1A AND F-1A ONLY AFTER BOTH SMOKE DAMPERS AND D-5 AND D-6 HAVE FULLY OPENED, F-1A SHALL BE ELECTRICALLY INTERLOCKED WITH AH-1A. INDICATED EXHAUST FANS SHALL OPERATE WHENEVER AH-1A IS IN OCCUPIED MODE. INDICATED EXHAUST FANS SHALL ALSO BE DE-ENERGIZED WHENEVER AH-1A IS DE-ENERGIZED. CURRENT RELAYS CR-1 AND CR-2 SHALL SIGNAL FAN STATUS TO THE DDC.

1.2 OPTIMUM START: THE DDC SYSTEM SHALL CONTROL THE AIR HANDLING UNIT FUNCTIONS FOR OCCUPIED AND UNOCCUPIED MODES OF OPERATION WITH ZONE OCCUPANCY SCHEDULE. AN OPTIMUM MORNING STARTUP SHALL BE PROVIDED. THE SUPPLY FAN (AH-1A AND RETURN FAN (F-1A) SHALL BE ENERGIZED UPON MORNING STARTUP. THE UNIT SHALL OPERATE TO ACHIEVE THE OCCUPIED ZONE SETPOINT (ADJUSTABLE) PRIOR TO ENTERING THE OCCUPIED MODE. MINIMUM OUTSIDE AIR DAMPER D-5 AND ECONOMIZER OUTSIDE AIR DAMPER D-1 SHALL BE CLOSED AND RETURN AIR DAMPER D-2 SHALL BE OPEN DURING THE MORNING STARTUP MODE. D-5 SHALL BE OPEN WHEN THE SPACE IS IN OCCUPIED MODE.

1.3 TEMPERATURE CONTROL: WHEN DISCHARGE AIR TEMPERATURE IS LOW, AS SENSED BY TEMPERATURE SENSOR TS-1, THE DDC SHALL MODULATE CHILLED WATER VALVE V-1 CLOSED. WHEN THE DISCHARGE AIR TEMPERATURE RISES ABOVE SETPOINT, MODULATE V-1 OPEN FOR COOLING. RESET SUPPLY AIR TEMPERATURE ONLY AS LOW AS REQUIRED TO SATISFY THE SETPOINT OF THE ROOM DEMANDING THE MOST COOLING, AS DETERMINED BY SAMPLING TERMINAL UNIT CONTROLLERS.

1.4 TEMPERATURE CONTROL: AH-1A, AH-1B, AH-5B, AH-5C, AND AH-5D ONLY. WHEN DISCHARGE AIR TEMPERATURE IS LOW, AS SENSED BY TEMPERATURE SENSOR TS-1, THE DDC SHALL POSITION CHILLED WATER VALVE V-1 CLOSED. POSITION HEATING VALVE V-2 OPEN. ON A RISE IN TEMPERATURE, MODULATE V-2 CLOSED. ON A FURTHER RISE IN SUPPLY AIR TEMPERATURE, MODULATE V-1 OPEN FOR COOLING.

1.5 ECONOMIZER CONTROL: WHEN THE DDC SENSES THAT THE OUTSIDE AIR ENTHALPY IS LESS THAN THE RETURN AIR ENTHALPY (AS SENSED BY TS-4, H-2, TS-3, AND H-1), THE DDC SHALL MODULATE ECONOMIZER OUTSIDE AIR DAMPER D-1 AND RELIEF AIR DAMPER D-3 OPEN AND RETURN AIR DAMPER D-2 CLOSED FOR UP TO 100-PERCENT OUTSIDE AIR FOR ECONOMISER OPERATION TO MAINTAIN SETPOINT AS SENSED BY TS-1. ON A RISE IN SUPPLY AIR TEMPERATURE ABOVE SETPOINT, AS SENSED BY TS-1, MODULATE CHILLED WATER VALVE V-1 OPEN FOR COOLING. ON A DROP IN RETURN AIR RELATIVE HUMIDITY BELOW 25-PERCENT, AS SENSED BY TS-3 AND H-1, DDC SHALL OVERRIDE THE ECONOMIZER AND POSITION D-1 CLOSED AND D-3 TO MINIMUM POSITION AND D-2 OPEN. WHEN OUTSIDE AIR ENTHALPY EXCEEDS RETURN AIR ENTHALPY, THE DDC SHALL POSITION D-1 CLOSED AND D-3 TO MINIMUM POSITION AND D-2 OPEN. ON A DROP IN SUPPLY AIR TEMPERATURE BELOW SETPOINT, THE DDC SHALL MODULATE D-1 AND D-3 CLOSED AND D-2 OPEN TO MAINTAIN SETPOINT.

1.5 VOLUME CONTROL: VARIABLE FREQUENCY DRIVE VFD-1 SHALL MODULATE SPEED OF SUPPLY FAN TO MAINTAIN SUPPLY-DUCT STATIC-PRESSURE SUBJECT TO STATIC-PRESSURE LIMIT CONTROLLER SPL-1. STATIC-PRESSURE SHALL BE SENSED BY SPS-1. SUPPLY-, AND RETURN-AIRFLOWS SHALL BE SENSED BY AIRFLOW MEASURING STATIONS (AFMS-1 AND 2) THE DDC SHALL MODULATE VFD-2 TO MAINTAIN A CONSTANT L/S DIFFERENTIAL BETWEEN THE SUPPLY AND RETURN AIRSTREAMS. THIS DIFFERENTIAL MAY BE REDUCED SHOULD EXCESSIVE SPACE PRESSURIZATION EXIST.

1.6 UNOCCUPIED MODE: DURING THE UNOCCUPIED MODE, AH-1A, F-1A AND INDICATED EXHAUST FANS SHALL BE DE-ENERGIZED, THE RETURN DAMPER D-2 SHALL BE OPEN AND THE OUTSIDE AIR DAMPERS D-1 AND D-5 SHALL BE CLOSED. IF THE AVERAGE SPACE TEMPERATURE, AS SENSED BY SPACE TEMPERATURE SENSOR TS-1 (TERMINAL UNIT CONTROL), FALLS BELOW THE SETBACK TEMPERATURE (13 DEGREES C), AH-1A AND F-1A SHALL BE ENERGIZED. WHEN THE SPACE TEMPERATURE RISES TO ONE DEGREE C ABOVE THE SETBACK TEMPERATURE, AH-1A AND F-1A SHALL BE DE-ENERGIZED. WHEN AN INTEGRAL PUSHBUTTON, SPACE TEMPERATURE SENSOR TS-1 (TERMINAL UNIT CONTROL), IS ACTIVATED, AH-1A AND F-1A SHALL BE ENERGIZED AND DAMPER D-1 SHALL MODULATE OPEN TO A MINIMUM OUTSIDE AIR POSITION AND OPERATE AS IN OCCUPIED MODE.

1.7 PREHEAT COIL PUMP (P-8, P-9, P-12 OR P-13): AH-1A, AH-1B, AH-5B, AND AH-5D ONLY. START PREHEAT COIL PUMP WHENEVER OUTDOOR AIR TEMPERATURE IS BELOW 10°C. DO NOT DE-ENERGIZE PUMP WHEN UNIT IS DE-ENERGIZED. CURRENT RELAYS CR-3 SHALL SIGNAL PUMP STATUS TO THE DDC SYSTEM.

1.8 SAFETIES: WHENEVER PRODUCTS OF COMBUSTION ARE DETECTED BY SMOKE DETECTOR(S) SD-1 OR SD-2 THEY SHALL DE-ENERGIZE AH-1A AND F-1A THROUGH HARD-WIRED INTERLOCKS AND SHALL SEND AN ALARM SIGNAL TO THE DDC SYSTEM AND THE BUILDING FIRE ALARM SYSTEM. WHENEVER AH-1A IS DE-ENERGIZED, F-1A AND INDICATED ASSOCIATED EXHAUST FANS SHALL ALSO BE DE-ENERGIZED, AND DAMPERS D-1 AND D-3 SHALL CLOSE AND D-4 AND D-5 SHALL CLOSE AFTER AN ADJUSTABLE TIME DELAY TO ALLOW THE SUPPLY AND RETURN FANS TO STOP. WHENEVER THE FIRE ALARM SIGNAL SERVING THE SAME ZONE THAT AH-1A SERVES IS ACTIVATED, AH-1A SHALL BE DE-ENERGIZED. IF THE MIXED AIR TEMPERATURE FALLS, AS SENSED BY TS-2, BELOW 4 DEGREES C, THE DDC SHALL MODULATE D-1 AND D-3 CLOSED AND D-2 OPEN. AN ALARM SHALL BE SENT TO THE DDC PANEL INDICATING THAT THE LOW LIMIT OVERRIDE HAS BEEN ENGAGED. IF THE MIXED AIR TEMPERATURE FALLS BELOW 2 DEGREES C, FREEZESTAT FZ-1 SHALL DE-ENERGIZE AH-1A.

1.9 MISCELLANEOUS ALARMS: THE DDC SYSTEM SHALL MONITOR ALL POINTS AND INDICATE AN ALARM CONDITION WHENEVER THE READINGS ARE OUT OF NORMAL OPERATING RANGES. THE DDC SYSTEM SHALL MONITOR FILTER LOADING THROUGH DPS-1 AND DPS-2 AND PROVIDE ALARMS. END SWITCHES ES-1 AND ES-2 SHALL INDICATE FULLY CLOSED OUTSIDE AIR DAMPERS.

1.10 CARBON DIOXIDE MONITORING FOR AH-1B: CARBON DIOXIDE MONITOR, LOCATION INDICATED, SHALL ADJUST OUTSIDE DAMPER D-1 AND RETURN AIR DAMPER D-2 AS NECESSARY TO MAINTAIN A MAXIMUM CARBON DIOXIDE CONTENT OF 950 PARTS PER MILLION SUBJECT TO MINIMUM OUTSIDE AIR QUANTITY OF 963 L/S FOR AH-1B.

2 TERMINAL UNIT CONTROL:

2.1 TYPE VVH: WHEN SPACE TEMPERATURE IS LOW, AS SENSED BY TS-1, HEATING HOT WATER CONTROL VALVE V-1 SHALL FULLY OPEN AND TERMINAL UNIT DAMPER D-1 SHALL BE AT ITS MINIMUM AIRFLOW POSITION. UPON A RISE IN SPACE TEMPERATURE V-1 SHALL MODULATE CLOSED. ON A CONTINUED RISE IN SPACE TEMPERATURE, AND AFTER PASSING THROUGH A DEAD BAND, DAMPER D-1 SHALL MODULATE OPEN. THE TERMINAL UNIT CONTROLLER SHALL MAINTAIN PRESSURE INDEPENDENT OPERATION OF THE TERMINAL UNIT AIR FLOW.

2.2 TYPE CVH: WHEN SPACE TEMPERATURE IS LOW, AS SENSED BY TS-1, HEATING HOT WATER CONTROL VALVE V-1 SHALL FULLY OPEN. UPON A RISE IN SPACE TEMPERATURE V-1 SHALL MODULATE CLOSED. THE TERMINAL UNIT CONTROLLER SHALL MAINTAIN PRESSURE INDEPENDENT OPERATION OF THE TERMINAL UNIT AIR FLOW.

2.3 TERMINAL UNITS SERVING THE CONFERENCE ROOMS SHALL OPERATE AS TYPE CVH UNITS AT THEIR MAXIMUM SCHEDULED AIR FLOW WHEN THE CONFERENCE ROOM OCCUPANCY SENSORS ARE ACTIVATED AND AS VVH UNITS WHEN THE ROOMS ARE UNOCCUPIED. UNITS SHALL BE ALLOWED TO TURN DOWN TO THEIR MINIMUM SCHEDULED AIR FLOW.

3 MECHANICAL AND ELECTRICAL ROOM CONTROL:

WHENEVER SPACE TEMPERATURE IS LOW AS SENSED BY THERMOSTAT T-1 UNIT HEATER FAN SHALL ENERGIZE AND HEATING HOT WATER VALVE V-1 SHALL BE FULLY OPEN. UPON A RISE IN SPACE TEMPERATURE, V-1 SHALL FULLY CLOSE AND UNIT HEATER FAN SHALL DE-ENERGIZE. UPON A FURTHER RISE IN SPACE TEMPERATURE, AND AFTER PASSING THROUGH A DEAD BAND, OUTSIDE AIR DAMPER D-2 AND EXHAUST AIR DAMPER D-1 SHALL OPEN AND EXHAUST FAN SHALL ENERGIZE. MONITOR FAN STATUS AND OUTSIDE AIR DAMPER STATUS WITH CR-1 AND ES-1, RESPECTIVELY.

4 CABINET HEATER CONTROL:
(TYPICAL FOR UNIT HEATERS)

WHENEVER SPACE TEMPERATURE IS LOW, AS SENSED BY THERMOSTAT T-1, CABINET HEATER FAN SHALL ENERGIZE AND HEATING HOT WATER VALVE V-1 SHALL FULLY OPEN. ON A RISE IN SPACE TEMPERATURE, V-1 SHALL FULLY CLOSE AND FAN SHALL DE-ENERGIZE.

5 CHILLER ROOM CONTROL:

5.1 MANUAL VENTILATION: CHILLER ROOM LIGHT SWITCH SHALL ENERGIZE F-11, OPEN EXHAUST AIR DAMPER D-3 AND OPEN OUTSIDE AIR DAMPER D-1.

5.2 SPACE TEMPERATURE CONTROL: WHENEVER SPACE TEMPERATURE IS LOW, AS SENSED BY THERMOSTAT T-3, UNIT HEATER FANS SHALL ENERGIZE AND HEATING HOT WATER CONTROL VALVES V-2 SHALL FULLY OPEN. ON A RISE IN SPACE TEMPERATURE, V-2 SHALL FULLY CLOSE AND UNIT HEATER FANS SHALL DE-ENERGIZE. ON A FURTHER RISE IN SPACE TEMPERATURE, AND AFTER PASSING THROUGH A DEAD BAND, OUTSIDE AIR DAMPER D-4 AND EXHAUST DAMPERS D-5 AND D-6 SHALL OPEN, D-7 SHALL CLOSE, AND F-10 SHALL ENERGIZE.

5.3 EMERGENCY OPERATION: UPON ACTIVATION OF THE REFRIGERATION LEAK DETECTOR OR MANUAL WALL SWITCH S-1, F-10 SHALL ENERGIZE, DAMPER D-6 SHALL CLOSE AND DAMPER D-7 SHALL OPEN TO ALLOW LOW INTAKE OF EXHAUST AIR. DAMPERS D-4 AND D-5 SHALL OPEN WHENEVER F-10 IS ENERGIZED.

5.4 MONITORING: CURRENT RELAYS CR-1 AND CR-2 SHALL SIGNAL FAN STATUS TO THE DDC SYSTEM.

6 HEATING HOT WATER SYSTEM CONTROL:

6.1 START/STOP: THE STARTING CIRCUIT FOR PUMPS P-4 AND P-5 SHALL BE ENERGIZED BY THE DDC SYSTEM. CURRENT RELAYS CR-1 AND CR-2 SHALL SIGNAL PUMP STATUS TO THE DDC SYSTEM. P-4 SHALL BE THE LEAD PUMP. P-4 AND P-5 SHALL ALTERNATE LEAD AT ONE MONTH INTERVALS (ADJUSTABLE). WHENEVER BOTH PUMPS ARE DE-ENERGIZED THE DDC SHALL FULLY CLOSE V-1 AND V-2.

6.2 TEMPERATURE CONTROL: WHEN HEATING HOT WATER SUPPLY TEMPERATURE IS BELOW SETPOINT, AS SENSED BY TEMPERATURE SENSOR TS-1, THE DDC SHALL MODULATE STEAM CONTROL VALVES V-1 AND V-2 OPEN ON A RISE IN TEMPERATURE, THE DDC SHALL MODULATE V-2 CLOSED. ON A FURTHER RISE IN TEMPERATURE AND AFTER V-2 IS FULLY CLOSED, THE DDC SHALL MODULATE V-1 CLOSED. WHEN THERE IS NO HOT WATER SUPPLY FLOW, WATER FLOW SWITCH WF-1 SHALL ACT THROUGH THE DDC SYSTEM TO FULLY CLOSE V-1 AND V-2. THE DDC SYSTEM SHALL RESET SUPPLY TEMPERATURE INVERSELY WITH OUTDOOR-AIR TEMPERATURE AS SENSED BY TS-1 ACCORDING TO RESET SCHEDULE INDICATED.

6.3 FLOW CONTROL: FLOW METER FM-1 SHALL MONITOR HEATING HOT WATER FLOW. WHEN DIFFERENTIAL PRESSURE IS LOW AS SENSED BY DIFFERENTIAL PRESSURE SENSOR DPSN-1, THE DDC SHALL DIRECT VARIABLE FREQUENCY DRIVE FOR THE LEAD PUMP (VFD-1 OR VFD-2) TO MODULATE SPEED OF PUMP TO MAINTAIN A CONSTANT DIFFERENTIAL PRESSURE. IF ONE PUMP CANNOT MAINTAIN DIFFERENTIAL PRESSURE AT DPSN-1 THEN THE DDC SHALL START THE LAG PUMP. THE VARIABLE SPEED DRIVE ON THE LAG PUMP SHALL OPERATE TO MAINTAIN A CONSTANT DIFFERENTIAL PRESSURE AT DPSN-1. WHEN THE FLOW IS LESS THAN 50 PERCENT OF DESIGN FLOW AND AFTER PASSING THROUGH A DEAD BAND RANGE, THE DDC SHALL SHUT OFF THE LAG PUMP.

6.4 EQUIPMENT FAILURE: IF THE LEAD PUMP FAILS, AN ALARM SHALL BE SENT TO THE DDC SYSTEM AND THE LAG PUMP SHALL ENERGIZE. IF THE LAG PUMP IS SET TO OPERATE BUT FAILS, AN ALARM SHALL BE SENT TO THE DDC SYSTEM INDICATING LAG PUMP FAILURE.

6.5 ENERGY CONSUMPTION: THE DDC SYSTEM SHALL MONITOR HEATING HOT WATER KW BY MONITORING SYSTEM FLOW THROUGH FM-1, SUPPLY WATER TEMPERATURE THROUGH TS-1 AND RETURN WATER TEMPERATURE THROUGH TS-2.

7 CHILLED WATER SYSTEM CONTROL:

7.1 WHENEVER CHILLED WATER IS REQUIRED, ENABLE THE LEAD CHILLER, (C-1 OR C-2), START LEAD CHILLED WATER PUMP (P-1 OR PUMP P-6), OPEN ASSOCIATED CHILLED WATER ISOLATION VALVE (V-1 OR V-6), START LEAD CONDENSER WATER PUMP (P-2 OR P-7) AND OPEN ASSOCIATED CONDENSER WATER ISOLATION VALVES (V-2 OR V-7, V-3 OR V-8 AND V-5 OR V-4). ONLY FLOWS ARE PROVEN BY FLOW SWITCHES (FS-1, FS-2 OR FS-3 AND FS-4), THE LEAD CHILLER SHALL START AND OPERATE UNDER ITS OWN CONTROLS.

7.2 MODULATE BYPASS VALVE (V-9) AS REQUIRED TO MAINTAIN ADJUSTABLE SETPOINT AT DIFFERENTIAL PRESSURE SENSOR (DPSN-1). WHEN BYPASS VALVE (V-9) CLOSES, START THE LAG CHILLED WATER AND CONDENSER WATER PUMPS, AND OPEN THE ASSOCIATED ISOLATON VALVES. ONCE FLOWS ARE PROVEN BY FLOW SWITCHES, THE LAG CHILLER SHALL START AND OPERATE UNDER ITS OWN CONTROL.

7.3 ONCE BYPASS VALVE (V-9) OPENS TO AN ADJUSTABLE PREDETERMINED SETPOINT WHICH INDICATES LEAD PUMP CAPACITY OF BELOW 90 PERCENT, DE-ENERGIZE THE LAG CHILLED WATER AND CONDENSER WATER PUMPS, CLOSE THE ASSOCIATED ISOLATION VALVES, AND DE-ENERGIZE THE LAG CHILLER.

7.4 COOLING TOWER(S): WHENEVER A TOWER'S RESPECTIVE ISOLATION VALVE (V-3 OR V-8 AND V-5 OR V-4) IS CLOSED, THE TOWER SHALL BE DE-ENERGIZED WHENEVER A TOWER'S RESPECTIVE ISOLATION VALVE IS OPEN, THE TOWER SHALL BE ACTIVE. SEQUENTIALLY CYCLE THE FAN SPEEDS OF ACTIVE TOWERS TO MAINTAIN COLD CONDENSER WATER TEMPERATURE AT TS-3. WHEN DROPPING FROM HIGH SPEED TO LOW SPEED, PROVIDE A TIME DELAY AS RECOMMENDED BY THE TOWER MANUFACTURER PRIOR TO ENERGIZING LOW SPEED. MODULATE VALVE V-10 AS REQUIRED TO MAINTAIN COLD CONDENSER WATER SET AT TS-2. ENERGIZE ELECTRIC BASIN HEATER AS REQUIRED TO MAINTAIN BASIN ABOVE FREEZING. ENERGIZE HEAT TRACING ON EXPOSED PIPING WHEN TEMPERATURE DROPS BELOW 4 DEGREES C. DE-ENERGIZE HEAT TRACING WHEN TEMPERATURE RISES ABOVE 7 DEGREES C. FLOW METER (FM-3) SHALL MEASURE CAPACITY OF MAKE-UP WATER TO TOWERS.

7.5 CHILLER GATEWAY: CONNECT EACH CHILLER CONTROL PANEL TO DDC SYSTEM THRU A GATEWAY. ALLOW ENERGIZE/DE-ENERGIZE FUNCTION LOAD LIMIT AND CHILLED WATER SUPPLY TEMPERATURE RESET THRU GATEWAY. ALLOW MONITORING OF STATUS, SYSTEM KW, CHILLED WATER SUPPLY SETPOINT, ENTERING AND LEAVING CHILLED WATER TEMPERATURES, ENTERING AND LEAVING CONDENSER WATER TEMPERATURES, HIGH AND LOW SIDE REFRIGERANT PRESSURES, OIL PRESSURE, OIL TEMPERATURE, MOTOR AMPS, INLET VANE POSITION, AND CHILLER ALARMS.

7.6 MISCELLANEOUS MONITORING: MONITOR TEMPERATURE, FLOWS, STATUS, AND ALARMS AS INDICATED.

7.7 COORDINATION WITH CHILLER MANUFACTURER'S REQUIREMENTS: PROVIDE ALL CONTROL WIRING, INTERLOCKS, AND SEQUENCE OF CONTROL MODIFICATIONS REQUIRED BY CHILLER MANUFACTURER TO PROVIDE A COMPLETE AND OPERABLE CHILLED WATER SYSTEM.

7.8 DUAL PURPOSE CHILLED WATER/CONDENSER WATER STAND-BY PUMP (P-3) SHALL BE A STAND-BY PUMP FOR CHILLED WATER PUMP P-1, AND CONDENSER WATER PUMP P-3. P-3 SHALL HAVE THE SAME DDC CONTROLS AS THE CHILLED WATER PUMP AND THE CONDENSER WATER PUMP. P-3 SHALL BE MANUALLY VALVED INTO EITHER PUMP PIPING. CURRENT RELAYS CR-3 SHALL SIGNAL PUMP STATUS TO THE DDC SYSTEM.

7.9 ENERGY CONSUMPTION: THE DDC SYSTEM SHALL MONITOR CHILLED WATER KW BY MONITORING SYSTEM FLOW THROUGH FM-1 OR FM-2, SUPPLY WATER TEMPERATURE THROUGH TS-1 OR FUTURE TS-6 AND RETURN WATER TEMPERATURE THROUGH TS-5 OR FUTURE TS-7.

NOTES THIS SHEET:

1. SEE SHEET M1 FOR LEGEND AND GENERAL NOTES.
2. SEE SHEET M44, M45, AND M46 FOR CONTROL DIAGRAMS.

REVISIONS: 1 REVISED SEQUENCES 6/98 ABC

H.S.M.M./C.C.A.
HAYES, SEAY, MATTERN & MATTERN, INC./ CROXTON COLLABORATIVE ARCHITECTS

DEPARTMENT OF THE NAVY — NAVAL FACILITIES ENGINEERING COMMAND — ATLANTIC DIVISION — NORFOLK, VIRGINIA
NAVAL STATION NAVBASE NORFOLK, NORFOLK, VA
RENOVATION OF BUILDING Z133
TEMPERATURE CONTROL SEQUENCES OF OPERATIONS

CODE ID. NO.	80091
SIZE	D
SCALE	NONE
EFD NO.	471141
STA. PROJ. NO.	P-671
SPEC. NO.	05966076
CONSTR. CONTR. NO.	N62470-96-B-6076
NAVFAC DRAWING NO.	4371141
SHEET	245 OF 308

M47