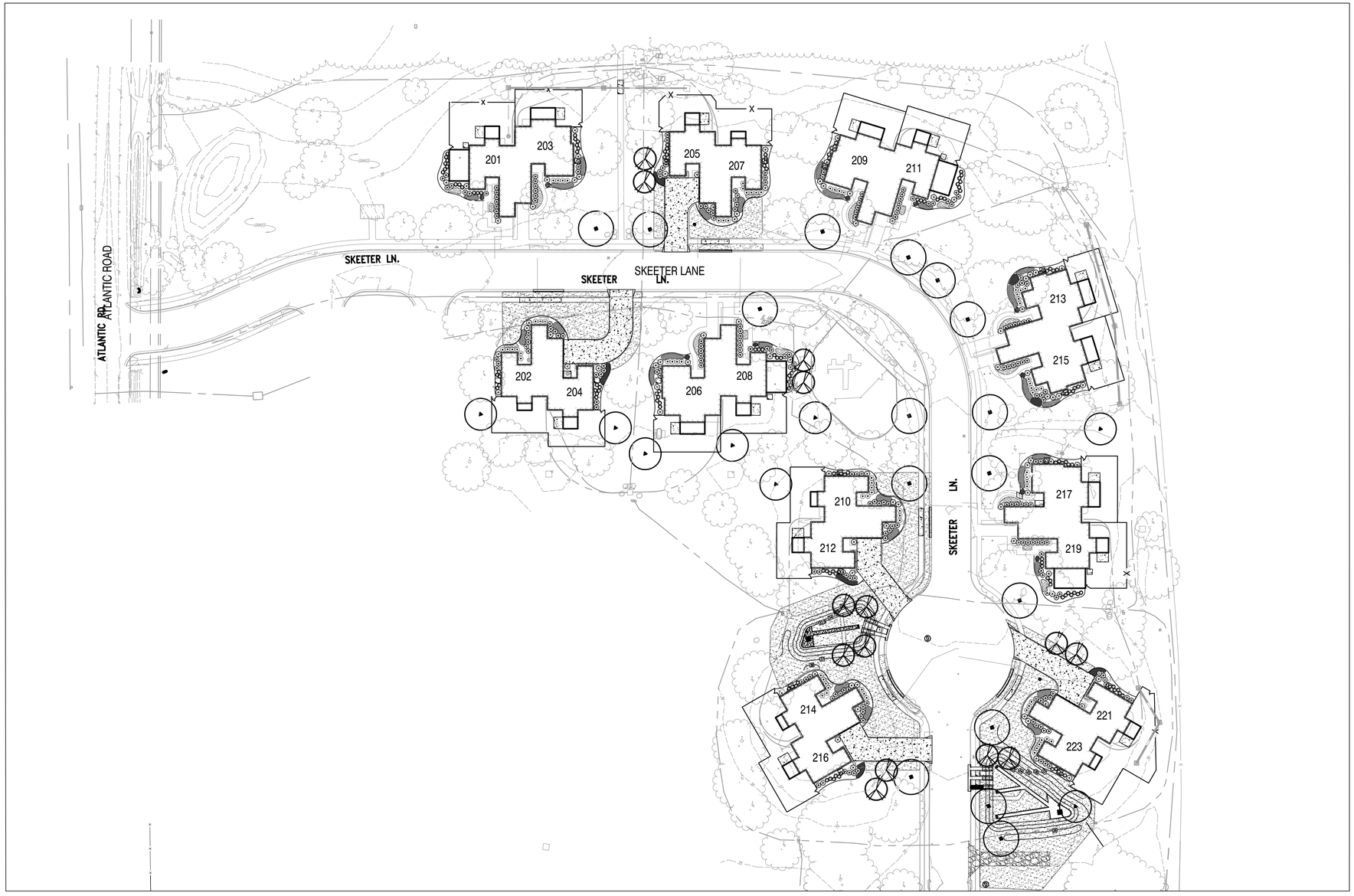

LANDSCAPE PLANTING PLAN - OVERALL SITE

SCALE: 1" = 50'

PLAN NORTH

GENERAL SHEET NOTES

1 COORDINATE LANDSCAPE SITE WORK WITH CIVIL, STRUCTURAL, ARCHITECTURAL, MECHANICAL AND ELECTRICAL DRAWINGS.

2 VERIFY ALL EXISTING SITE IMPROVEMENTS FOR REMOVAL/SALVAGED, STORED DURING CONSTRUCTION, REINSTALLED/OR PROTECTED IN PLACE WITH CONTRACTING OFFICER PRIOR TO CONSTRUCTION

3. ALL PLANTING BEDS TO HAVE 3" OF LOCAL RIVER STONE FOR MULCH.

1 REVISED ENTIRE SHEET

GRAPHICAL SCALE

0 50' 100'

1" = 50'

1	GENERAL REVISIONS 01	01/21/16		APPR

NAVFAC

APPROVED

FOR COMMANDER NAVFAC

ACTIVITY

HERM ROLLINGS

SATISFACTORY TO DATE MM/DD/YY

DES: BTG DRW: BTG CHK: BTG

JTL/APK: JTL/APK

BRANCH MANAGER

CHIEF ENG/ARCH: RLW

FIRE PROTECTION: DPS

DEPARTMENT OF THE NAVY
NAVAL FACILITIES ENGINEERING COMMAND
HAMPTON ROADS IPT

NAVAL FACILITIES ENGINEERING COMMAND
NORFOLK NAVAL STATION

SURFACE COMBAT SYSTEM CENTER
WALLOPS ISLAND, VA

P1602 - CONVERSION AND RENOVATION OF MILITARY FAMILY HOUSING

LANDSCAPE PLANTING PLAN – OVERALL SITE

SCALE: AS SHOWN

EPROJECT NO.: 1366573

CONSTR. CONTR. NO.:

NAVFAC DRAWING NO. 12708270

SHEET 18 OF 124

LP100

DRAWFORM REVISION: 10 MARCH 2009

FILE NAME: P:\VA\Wallops Island\WLCOM\2016_1366573_P1602_DBB_SkeeterLineRenovation&Conversion\8_Design\Drawings\Sheet Files\06_Landscape\P1602-1366573-LP100.dwg LAYOUT NAME: LP100 PLOTTED: Thursday, January 28, 2016 - 1:12pm USER: taylor.gould

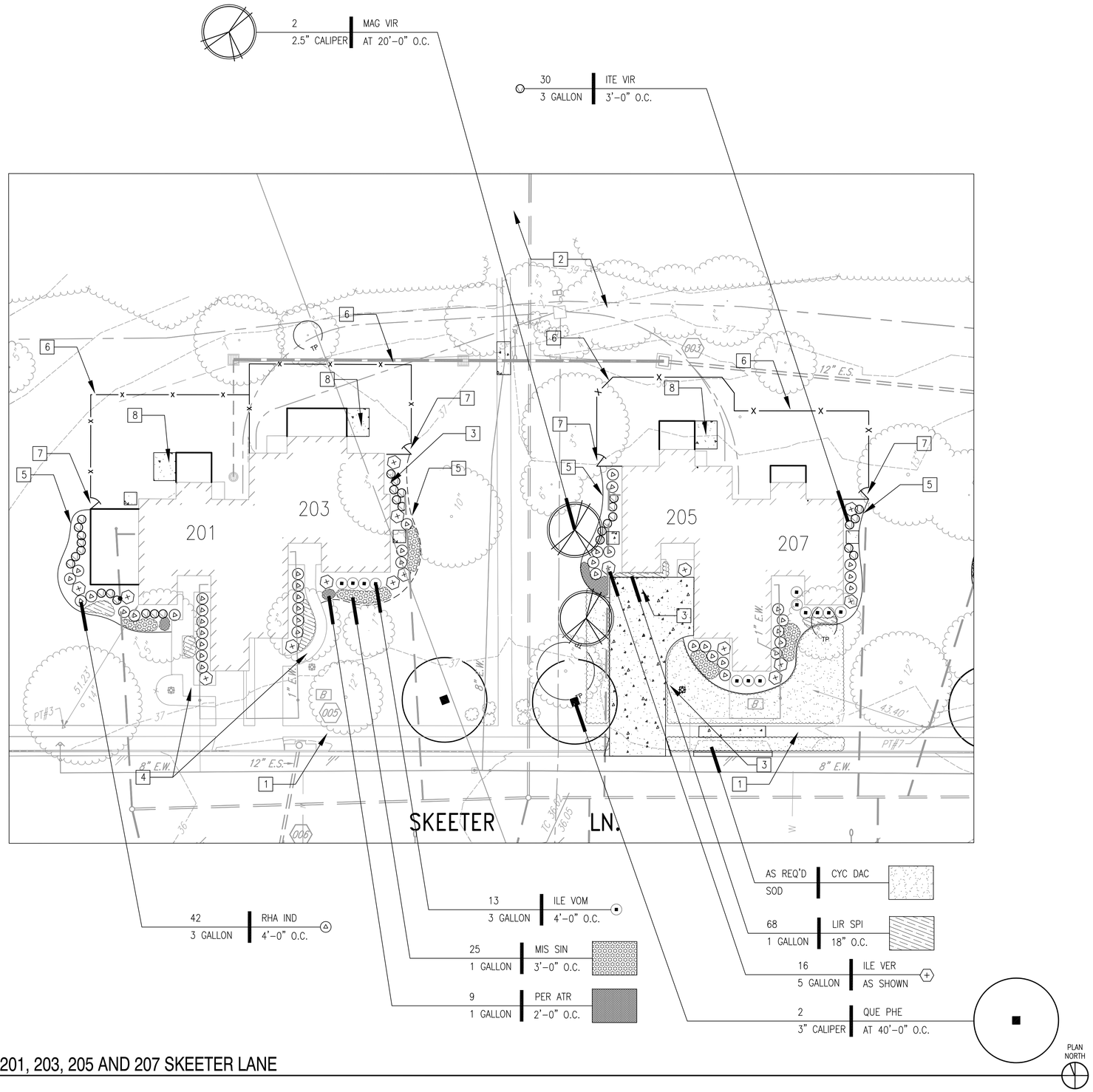

PLANTING PLAN 201, 203, 205 AND 207 SKEETER LANE

SCALE: 1" = 20'

GENERAL SHEET NOTES

1. COORDINATE LANDSCAPE SITE WORK WITH CIVIL, STRUCTURAL, ARCHITECTURAL, MECHANICAL AND ELECTRICAL DRAWINGS.
2. VERIFY ALL EXISTING SITE IMPROVEMENTS FOR REMOVAL/SALVAGED, STORED DURING CONSTRUCTION, REINSTALLED/OR PROTECTED IN PLACE WITH CONTRACTING OFFICER PRIOR TO CONSTRUCTION
3. ALL PLANTING BEDS TO HAVE 3" OF LOCAL RIVER STONE FOR MULCH.
4. PLANT QUANTITIES SHOWN ARE FOR UNITS SHOWN ON THIS PLAN SHEET ONLY. TOTAL PLANT QUANTITIES FOR PROJECT ARE SHOWN ON LP501.

1 REVISED ENTIRE SHEET

NEW WORK LEGEND AND KEYNOTES

1. EXISTING SIDEWALK ALONG SKEETER LANE TO REMAIN (PROTECT IN PLACE)(SEE CIVIL DRAWINGS)
2. EXISTING WOODS TO REMAIN (PROTECT IN PLACE)
3. EXISTING TREE(S) TO BE REMOVED. SEE CIVIL DRAWINGS
4. EXISTING WALK TO REMAIN (PROTECT IN PLACE) (SEE CIVIL DRAWINGS)
5. STEEL LANDSCAPE EDGING BETWEEN PLANT BEDS AND TURF AREAS TYPICAL (SEE DETAIL A2/LP501)
6. REPLACE EXISTING WOODEN FENCE WITH 6' VINYL PRIVACY FENCE. COORDINATE WITH CONTRACTING OFFICER ON THE REVISED LIMITS OF THE FENCING
7. INSTALL 4' WIDE VINYL PRIVACY FENCE GATE. SEE CIVIL DRAWINGS
8. 8' X 10' CONCRETE PATIO. SEE CIVIL DRAWINGS

GRAPHICAL SCALE

1" = 20' 0 10' 20' 40'

SYM	DESCRIPTION	DATE	APPR
1	GENERAL REVISIONS 01	01/21/16	---

NAVFAC

SEAL

A/E INFO

APPROVED

FOR COMMANDER NAVFAC

ACTIVITY: HERM ROLLINGS

SATISFACTORY TO DATE MM/DD/YY

DES BTG DRW BTG CHK BTG

JTL/APK JTL/APK

BRANCH MANAGER

CHIEF ENG/ARCH RLW

FIRE PROTECTION DPS

DEPARTMENT OF THE NAVY
NAVAL FACILITIES ENGINEERING COMMAND
NAVAL FACILITIES ENGINEERING COMMAND
NORFOLK NAVAL STATION
HAMPTON ROADS IPT
SURFACE COMBAT SYSTEM CENTER
WALLOPS ISLAND, VA

P1602 - CONVERSION AND RENOVATION OF MILITARY FAMILY HOUSING

PLANTING PLAN
201, 203, 205, AND 207 SKEETER LANE

SCALE: AS SHOWN

EPROJECT NO.: 1366573

CONSTR. CONTR. NO.

NAVFAC DRAWING NO. 12708271

SHEET 19 OF 124

LP101

DRAWFORM REVISION: 10 MARCH 2009

FILE NAME: P:\VA\Wallops Island\MILCON\2016_1366573_P1602_DBB_SkeeterLaneRenovation&Conversion\B_Design\Drawings\Sheet Files\06_Landscape\P1602-136673-LP101.dwg LAYOUT NAME: LP101 PLOTTED: Thursday, January 28, 2016 - 2:41pm USER: taylor.gould

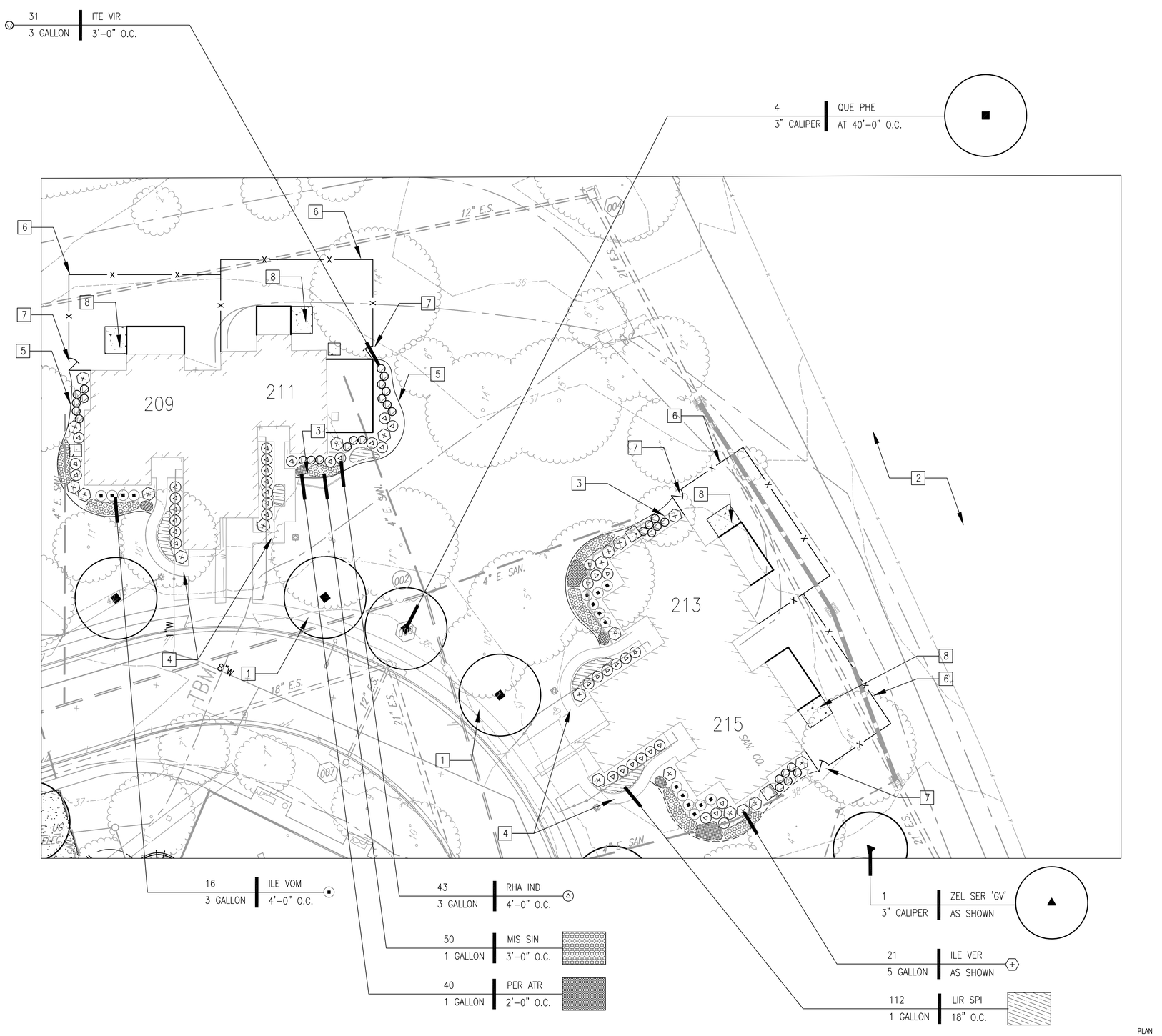

PLANTING PLAN 209, 211, 213 AND 215 SKEETER LANE

SCALE: 1" = 20'

GENERAL SHEET NOTES

1. COORDINATE LANDSCAPE SITE WORK WITH CIVIL, STRUCTURAL, ARCHITECTURAL, MECHANICAL AND ELECTRICAL DRAWINGS.
2. VERIFY ALL EXISTING SITE IMPROVEMENTS FOR REMOVAL/SALVAGED, STORED DURING CONSTRUCTION, REINSTALLED/OR PROTECTED IN PLACE WITH CONTRACTING OFFICER PRIOR TO CONSTRUCTION
3. ALL PLANTING BEDS TO HAVE 3" OF LOCAL RIVER STONE FOR MULCH.
4. PLANT QUANTITIES SHOWN ARE FOR UNITS SHOWN ON THIS PLAN SHEET ONLY. TOTAL PLANT QUANTITIES FOR PROJECT ARE SHOWN ON LP501.

1 REVISED ENTIRE SHEET

NEW WORK LEGEND AND KEYNOTES

1. EXISTING SIDEWALK ALONG SKEETER LANE TO REMAIN (PROTECT IN PLACE)(SEE CIVIL DRAWINGS)
2. EXISTING WOODS TO REMAIN (PROTECT IN PLACE)
3. EXISTING TREE TO BE REMOVED
4. EXISTING WALK TO REMAIN (PROTECT IN PLACE) (SEE CIVIL DRAWINGS)
5. STEEL LANDSCAPE EDGING BETWEEN PLANT BEDS AND TURF AREAS TYPICAL (SEE DETAIL A2/LP501)
6. REPLACE EXISTING WOODEN FENCE WITH 6' VINYL PRIVACY FENCE. COORDINATE WITH CONTRACTING OFFICER ON THE REVISED LIMITS OF THE FENCING
7. INSTALL 4' WIDE VINYL PRIVACY FENCE GATE. SEE CIVIL DRAWINGS
8. 8' X 10' CONCRETE PATIO. SEE CIVIL DRAWINGS

GRAPHICAL SCALE

1" = 20' 0 10' 20' 40'

SYM	DESCRIPTION	DATE	APPR
1	GENERAL REVISIONS 01	01/21/16	---

NAVFAC

SEAL

A/E INFO

APPROVED

FOR COMMANDER NAVFAC

ACTIVITY: HERM ROLLINGS

SATISFACTORY TO DATE MM/DD/YY

DES BTG DRW BTG CHK BTG

JTL/APK JTL/APK

BRANCH MANAGER

CHIEF ENG/ARCH RLW

FIRE PROTECTION DPS

DEPARTMENT OF THE NAVY
NAVAL FACILITIES ENGINEERING COMMAND
NORFOLK NAVAL STATION
HAMPTON ROADS IPT
WALLOPS ISLAND, VA

SURFACE COMBAT SYSTEM CENTER

P1602 - CONVERSION AND RENOVATION OF MILITARY FAMILY HOUSING

PLANTING PLAN
209, 211, 213, AND 215 SKEETER LANE

SCALE: AS SHOWN

EPROJECT NO.: 1366573

CONSTR. CONTR. NO.

NAVFAC DRAWING NO. 12708272

SHEET 20 OF 124

LP102

DRAWFORM REVISION: 10 MARCH 2009

FILE NAME: P:\VA\Wallops Island\MILCON\2016_1366573_P1602_DBB_SkeeterLaneRenovation&Conversion\B_Design\Drawings\Sheet Files\06_Landscape\P1602-136673-LP102.dwg LAYOUT NAME: LP102 PLOTTED: Thursday, January 28, 2016 - 2:47pm USER: taylor.gould

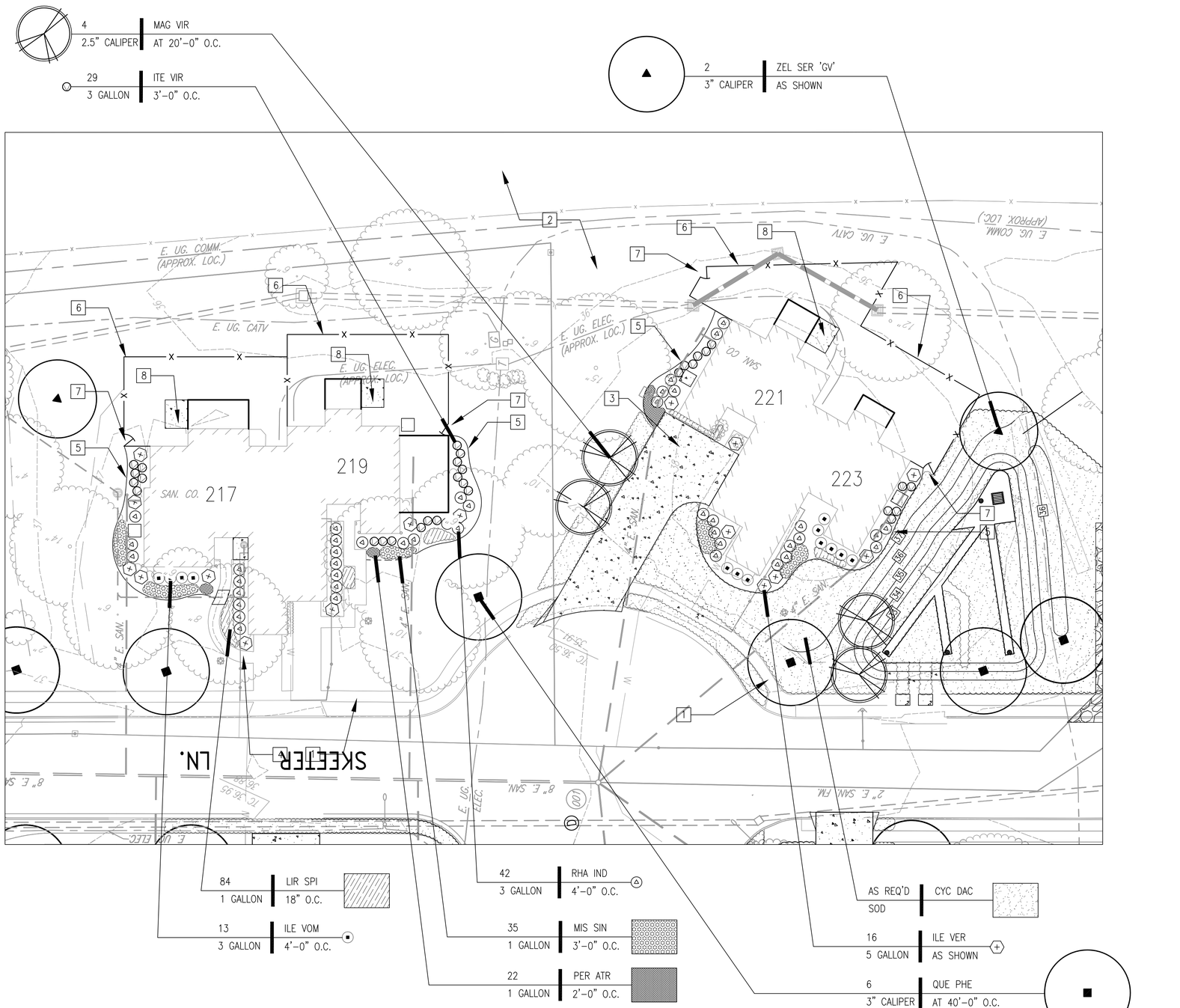

PLANTING PLAN 217, 219, 221 AND 223 SKEETER LANE

SCALE: 1" = 20'

GENERAL SHEET NOTES

1. COORDINATE LANDSCAPE SITE WORK WITH CIVIL, STRUCTURAL, ARCHITECTURAL, MECHANICAL AND ELECTRICAL DRAWINGS.
2. VERIFY ALL EXISTING SITE IMPROVEMENTS FOR REMOVAL/SALVAGED, STORED DURING CONSTRUCTION, REINSTALLED/OR PROTECTED IN PLACE WITH CONTRACTING OFFICER PRIOR TO CONSTRUCTION
3. ALL PLANTING BEDS TO HAVE 3" OF LOCAL RIVER STONE FOR MULCH.
4. PLANT QUANTITIES SHOWN ARE FOR UNITS SHOWN ON THIS PLAN SHEET ONLY. TOTAL PLANT QUANTITIES FOR PROJECT ARE SHOWN ON LP501.

1 REVISED ENTIRE SHEET

NEW WORK LEGEND AND KEYNOTES

1. EXISTING SIDEWALK ALONG SKEETER LANE TO REMAIN (PROTECT IN PLACE)(SEE CIVIL DRAWINGS)
2. EXISTING WOODS TO REMAIN (PROTECT IN PLACE)
3. EXISTING TREE TO BE REMOVED (SEE CIVIL DRAWINGS)
4. EXISTING WALK TO REMAIN (PROTECT IN PLACE) (SEE CIVIL DRAWINGS)
5. STEEL LANDSCAPE EDGING BETWEEN PLANT BEDS AND TURF AREAS TYPICAL (SEE DETAIL A2/LP501)
6. REPLACE EXISTING WOODEN FENCE WITH 6' VINYL PRIVACY FENCE. COORDINATE WITH CONTRACTING OFFICER ON THE REVISED LIMITS OF THE FENCING
7. INSTALL 4' WIDE VINYL PRIVACY FENCE GATE. SEE CIVIL DRAWINGS
8. 8' X 10' CONCRETE PATIO. SEE CIVIL DRAWINGS

GRAPHICAL SCALE

1" = 20' 0 10' 20' 40'

SYM	DESCRIPTION	DATE	APPR
1	GENERAL REVISIONS 01	01/21/16	---

NAVFAC

SEAL

A/E INFO

APPROVED

FOR COMMANDER NAVFAC

ACTIVITY: HERM ROLLINGS

SATISFACTORY TO DATE MM/DD/YY

DES BTG DRW BTG CHK BTG

JTL/APK JTL/APK

BRANCH MANAGER

CHIEF ENG/ARCH RLW

FIRE PROTECTION DPS

DEPARTMENT OF THE NAVY
NAVAL FACILITIES ENGINEERING COMMAND
NAVAL FACILITIES ENGINEERING COMMAND
NORFOLK NAVAL STATION
HAMPTON ROADS IPT
WALLOPS ISLAND, VA

SURFACE COMBAT SYSTEM CENTER

P1602 - CONVERSION AND RENOVATION OF MILITARY FAMILY HOUSING

PLANTING PLAN
217, 219, 221 AND 223 SKEETER LANE

SCALE: AS SHOWN

EPROJECT NO.: 1366573

CONSTR. CONTR. NO.

NAVFAC DRAWING NO. 12708273

SHEET 21 OF 124

LP103

DRAWFORM REVISION: 10 MARCH 2009

FILE NAME: P:\VA\Wallops Island\MILCON\2016_1366573_P1602_DBB_SkeeterLaneRenovation&Conversion\B_Design\Drawings\Sheet Files\06_Landscape\P1602-136673-LP103.dwg LAYOUT NAME: LP103 PLOTTED: Wednesday, January 27, 2016 - 7:17pm USER: taylor.gould

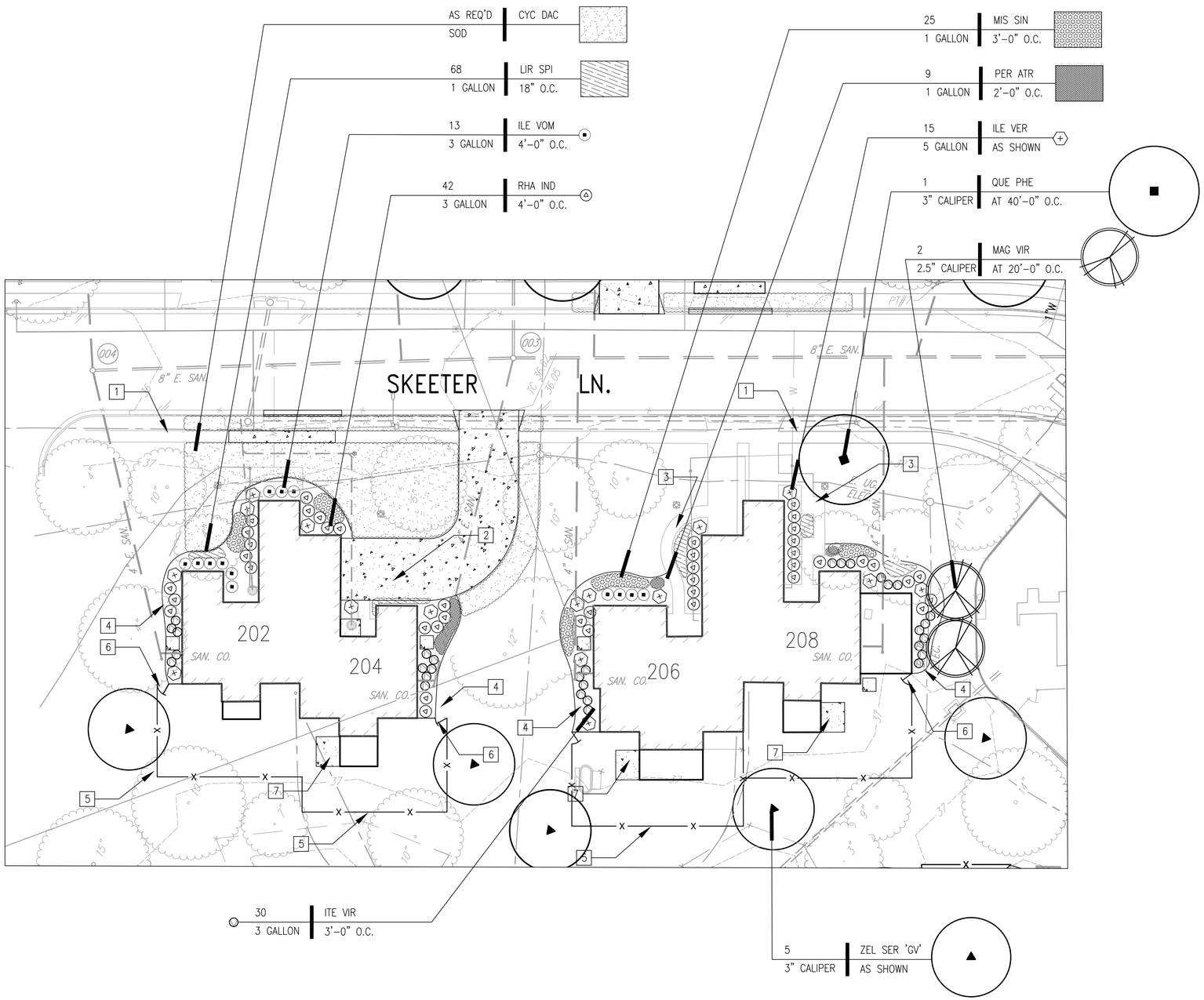

PLANTING PLAN 202, 204, 206 AND 208 SKEETER LANE

SCALE: 1" = 20'

PLAN NORTH

GENERAL SHEET NOTES

1. COORDINATE LANDSCAPE SITE WORK WITH CIVIL, STRUCTURAL, ARCHITECTURAL, MECHANICAL AND ELECTRICAL DRAWINGS.
2. VERIFY ALL EXISTING SITE IMPROVEMENTS FOR REMOVAL/SALVAGED, STORED DURING CONSTRUCTION, REINSTALLED/OR PROTECTED IN PLACE WITH CONTRACTING OFFICER PRIOR TO CONSTRUCTION
3. ALL PLANTING BEDS TO HAVE 3" OF LOCAL RIVER STONE FOR MULCH.
4. PLANT QUANTITIES SHOWN ARE FOR UNITS SHOWN ON THIS PLAN SHEET ONLY. TOTAL PLANT QUANTITIES FOR PROJECT ARE SHOWN ON LP501.

1 REVISED ENTIRE SHEET

NEW WORK LEGEND AND KEYNOTES

1. EXISTING SIDEWALK ALONG SKEETER LANE TO REMAIN (PROTECT IN PLACE)(SEE CIVIL DRAWINGS)
2. EXISTING TREE TO BE REMOVED (SEE CIVIL DRAWINGS)
3. EXISTING WALK TO REMAIN (PROTECT IN PLACE) (SEE CIVIL DRAWINGS)
4. STEEL LANDSCAPE EDGING BETWEEN PLANT BEDS AND TURF AREAS TYPICAL (SEE DETAIL A2/LP501)
5. REPLACE EXISTING WOODEN FENCE WITH 6' VINYL PRIVACY FENCE. COORDINATE WITH CONTRACTING OFFICER ON THE REVISED LIMITS OF THE FENCING
6. INSTALL 4' WIDE VINYL PRIVACY FENCE GATE. SEE CIVIL DRAWINGS
7. 8' X 10' CONCRETE PATIO. SEE CIVIL DRAWINGS

GRAPHICAL SCALE

1" = 20'

0 10' 20' 40'

SYM	DESCRIPTION	DATE	APPR
1	GENERAL REVISIONS 01	01/21/16	---

NAVFAC

SEAL

A/E INFO

APPROVED

FOR COMMANDER NAVFAC

ACTIVITY: HERM ROLLINGS

SATISFACTORY TO DATE MM/DD/YY

DES BTG DRW BTG CHK BTG

JTL/APK JTL/APK

BRANCH MANAGER

CHIEF ENG/ARCH RLW

FIRE PROTECTION DPS

DEPARTMENT OF THE NAVY
NAVAL FACILITIES ENGINEERING COMMAND
HAMPTON ROADS IPT
NAVAL FACILITIES ENGINEERING COMMAND
NORFOLK NAVAL STATION
WALLOPS ISLAND, VA

SURFACE COMBAT SYSTEM CENTER
P1602 - CONVERSION AND RENOVATION OF MILITARY FAMILY HOUSING

PLANTING PLAN
202, 204, 206 AND 208 SKEETER LANE

SCALE: AS SHOWN

EPROJECT NO.: 1366573

CONSTR. CONTR. NO.

NAVFAC DRAWING NO. 12708274

SHEET 22 OF 124

LP104

DRAWFORM REVISION: 10 MARCH 2009

FILE NAME: P:\VA\Wallops Island\MILCON\2016_1366573_P1602_DBB_SkeeterLaneRenovation&Conversion\B_Design\Drawings\Sheet Files\06_Landscape\P1602-1366573-LP104.dwg LAYOUT NAME: LP104 PLOTTED: Wednesday, January 27, 2016 - 7:22pm USER: taylor.gould

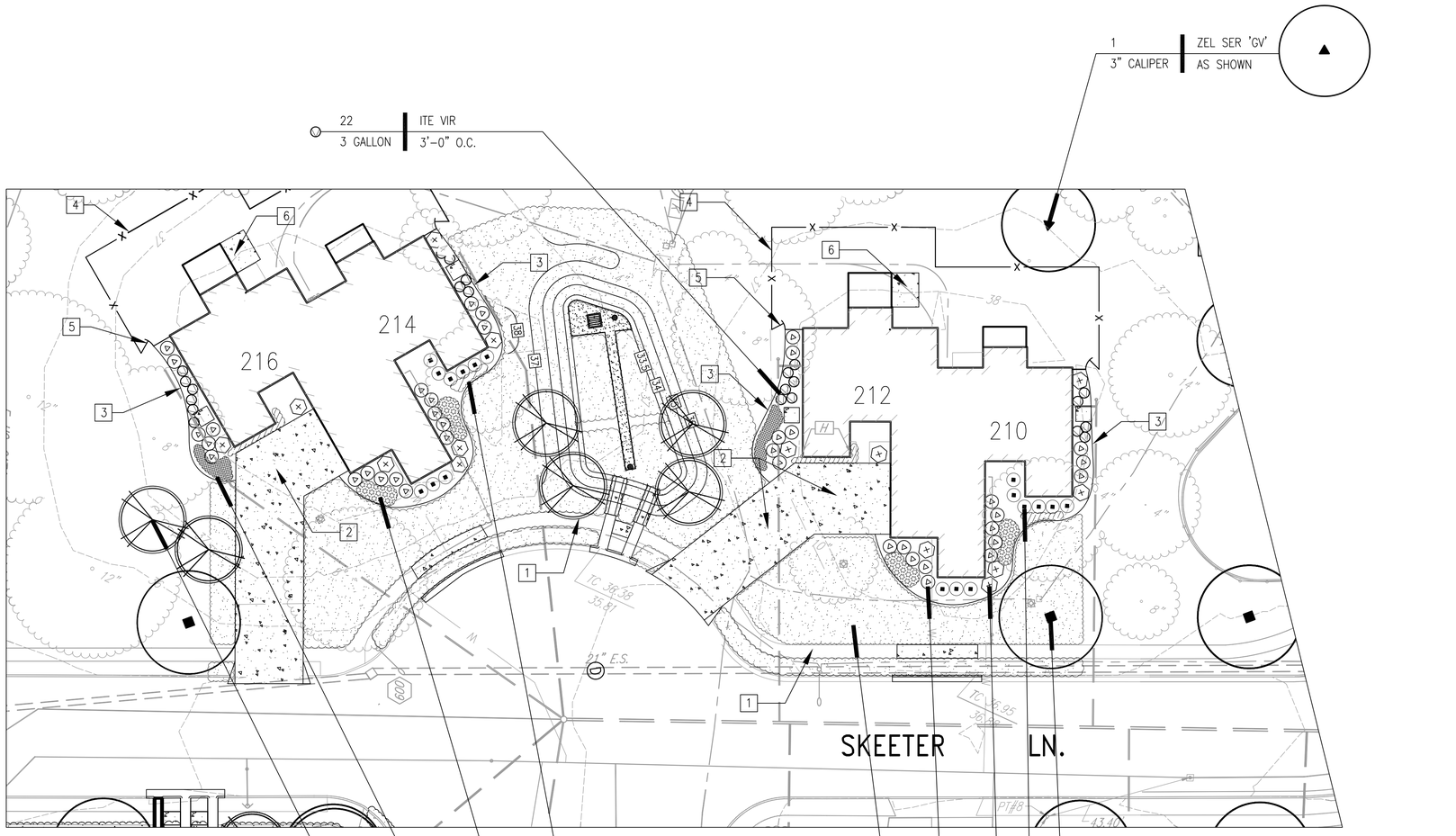

22 | ITE VIR
3 GALLON | 3'–0" O.C.

1 | ZEL SER 'GV'
3" CALIPER | AS SHOWN

68 | LIR SPI
1 GALLON | 18" O.C.

25 | MIS SIN
1 GALLON | 3'–0" O.C.

9 | PER ATR
1 GALLON | 2'–0" O.C.

6 | MAG VIR
2.5" CALIPER | AT 20'–0" O.C.

3 | QUE PHE
3" CALIPER | AT 40'–0" O.C.

18 | ILE VOM
3 GALLON | 4'–0" O.C.

14 | ILE VER
5 GALLON | AS SHOWN

38 | RHA IND
3 GALLON | 4'–0" O.C.

AS REQ'D | CYC DAC
SOD

PLAN NORTH

PLANTING PLAN 210, 212, 214 AND 216 SKEETER LANE

SCALE: 1" = 20'

GENERAL SHEET NOTES

1. COORDINATE LANDSCAPE SITE WORK WITH CIVIL, STRUCTURAL, ARCHITECTURAL, MECHANICAL AND ELECTRICAL DRAWINGS.
2. VERIFY ALL EXISTING SITE IMPROVEMENTS FOR REMOVAL/SALVAGED, STORED DURING CONSTRUCTION, REINSTALLED/OR PROTECTED IN PLACE WITH CONTRACTING OFFICER PRIOR TO CONSTRUCTION
3. ALL PLANTING BEDS TO HAVE 3" OF LOCAL RIVER STONE FOR MULCH.
4. PLANT QUANTITIES SHOWN ARE FOR UNITS SHOWN ON THIS PLAN SHEET ONLY. TOTAL PLANT QUANTITIES FOR PROJECT ARE SHOWN ON LP501.

1 REVISED ENTIRE SHEET

NEW WORK LEGEND AND KEYNOTES

1. EXISTING SIDEWALK ALONG SKEETER LANE TO REMAIN (PROTECT IN PLACE)(SEE CIVIL DRAWINGS)
2. EXISTING TREE TO BE REMOVED (SEE CIVIL DRAWINGS)
3. STEEL LANDSCAPE EDGING BETWEEN PLANT BEDS AND TURF AREAS TYPICAL (SEE DETAIL A2/LP501)
4. REPLACE EXISTING WOODEN FENCE WITH 6' VINYL PRIVACY FENCE. COORDINATE WITH CONTRACTING OFFICER ON THE REVISED LIMITS OF THE FENCING
5. INSTALL 4' WITH VINYL PRIVACY FENCE GATE. SEE CIVIL DRAWINGS
6. 8' X 10' CONCRETE PATIO. SEE CIVIL DRAWINGS

GRAPHICAL SCALE

1" = 20'

0 10' 20' 40'

				APPR
1	01/21/16	GENERAL REVISIONS 01	STM	DATE

DESCRIPTION

NAVFAC

SEAL

A/E INFO

APPROVED

FOR COMMANDER NAVFAC

ACTIVITY

HERM ROLLINGS

SATISFACTORY TO DATE MM/DD/YY

DES BTG DRW BTG CHK BTG

JTL/APK: JTL/APK

BRANCH MANAGER

CHIEF ENG/ARCH RLW

FIRE PROTECTION DPS

DEPARTMENT OF THE NAVY
NAVAL FACILITIES ENGINEERING COMMAND
HAMPTON ROADS IPT
SURFACE COMBAT SYSTEM CENTER
NORFOLK NAVAL STATION
WALLOPS ISLAND, VA

P1602 - CONVERSION AND RENOVATION OF MILITARY FAMILY HOUSING

PLANTING PLAN
210, 212, 214 AND 216 SKEETER LANE

SCALE: AS SHOWN
EPROJECT NO.: 1366573
CONSTR. CONTR. NO.
NAVFAC DRAWING NO. 12708275
SHEET 23 OF 124

LP105

DRAWFORM REVISION: 10 MARCH 2009

FILE NAME: P:\VA\Wallops Island\MILCON\2016_1366573_P1602_DBB_SkeeterLaneRenovationAndConversion\B_Design\Drawings\Sheet Files\06_Landscape\P1602-1366573-LP105.dwg LAYOUT NAME: LP105
PLOTTED: Thursday, January 28, 2016 - 1:46pm USER: taylor.gould

PLANT MATERIAL SCHEDULE

	KEY	BOTANICAL NAME	COMMON NAME	QTY	HEIGHT	SPREAD	CALIPER	DETAIL	SIZE	REMARKS
TREES	ZEL SER 'GV'	ZELKOVA SERRATA 'GREEN VASE'	GREEN VASE JAPANESE ZELKOVA	9	14–16'	6–8'	3" MIN.	A5 & C5	BALL AND BURLAP	FULL BRANCHING, REGULAR SHAPE, 4' CLEAR TRUNK
	QUE PHE	QUERCUS PHELLOS	WILLOW OAK	16	14–16'	6–8'	3" MIN.	A5 & C5	BALL AND BURLAP	FULL BRANCHING, REGULAR SHAPE, 4' CLEAR TRUNK
	MAG VIR	MAGNOLIA VIRGINIANA	SWEETBAY MAGNOLIA	14	10–12'	4–6'	2.5" MIN.	A5 & C5	BALL AND BURLAP	FULL BRANCHING, REGULAR SHAPE, SINGLE 4' CLEAR TRUNK
SHRUBS/ GROUNDCOVERS	RHA IND	RHAPHIOLEPIS INDICA 'MONTO'	INDIAN PRINCESS INDIAN HAWTHORNE	207	30"	24"		A3	3 GALLON	PLANT 4'–0" O.C.
	ITE VIR	ITEA VIRGINICA 'SPRICH'	LITTLE HENRY DWARF VA SWEETSPIRE	142	20"	20"		A3	3 GALLON	PLANT 3'–0" O.C.
	ILE VER	ILEX VERTICILLATA 'SPRIBER'	BERRY NICE WINTERBERRY HOLLY	82	36"	24"		A3	5 GALLON	ACCENT PLANTING AS SHOWN
	MIS SIN	MISCANTHUS SINENSIS 'LITTLE KITTEN'	LITTLE KITTEN MAIDEN GRASS	160	18"	18"		B3	1 GALLON	PLANT 3'–0" O.C.
	PER ATR	PEROVSKIA ATRIPLICIFOLIA 'LITTLE SPIRE'	LITTLE SPIRE RUSSIAN SAGE	89	12"	12"		B3	1 GALLON	PLANT 2'–0" O.C.
	ILE VOM	ILEX VOMITORIA 'STOKE'S DWARF'	STOKE'S DWARF YAUPON HOLLY	73	30"	24"		A3	3 GALLON	PLANT 4'–0" O.C.
	LIR SPI	LIRIOPE SPICATA	CREEPING LILY–TURF	400	10"	12"		B3	1 GALLON	PLANT 16" O.C.
TURF	CYN DAC	CYNODON DACTYLON 'TIFWAY 419'	TIFWAY 419––BURMUDA	AS REQ'D					SOD	SOD AREA AS SHOWN ON PLANS

PLANTING NOTES

1. ALL PLANTING BEDS WITH SLOPES LESS THAN 2:1 SHALL RECEIVE A MINIMUM 3" THICK LAYER OF LOCAL RIVER STONE. STONE SHALL BE 2–3 INCHES IN SIZE AND LIGHT TAN OR GRAY IN COLOR. (SUBMIT 1/4 C.F. SAMPLE FOR APPROVAL)
2. ALL PLANT MATERIALS SHALL BE SPOTTED IN–PLACE BY THE CONTRACTING OFFICER PRIOR TO CONTRACTOR DIGGING THE PLANTING PITS. CONTRACTOR SHALL NOTIFY THE CONTRACTING OFFICER 10 WORKING DAYS PRIOR TO DELIVERY OF PLANT MATERIALS.
3. ALL ROCK AND DEBRIS LARGER THAN ONE INCH (1") SHALL BE REMOVED FROM THE SIDES. BOTTOM, AND BACKFILL SOIL OF THE PLANTING PITS OF ALL PLANT MATERIALS. DISPOSE OF ALL DEBRIS OFF SITE.
4. ROOT BARRIERS SHALL BE INSTALLED PER DETAIL ON THIS SHEET FOR ALL TREES LOCATED WITHIN 8'–0" IN ANY DIRECTION OF ADJACENT HARDSCAPE OR AS INDICATED ON THE PLANT MATERIAL SCHEDULE. ROOT BARRIER SHALL EXTEND LINEAR ALONG FACE OF ADJACENT HARDSCAPE FOR A DISTANCE OF 8'–0" ON EACH SIDE OF TREE TRUNK. DO NOT ENCIRCLE TREE. ROOT BARRIERS SHALL BE .90" (MIN) THICK X 24" DEEP, LINEAR TYPE WITH INTERLOCKING ENDS. MUST CONTAIN ULTRA–VIOLET (UV) INHIBITORS AND HAVE A 3/8" (MIN.) WIDE T–TOP EDGE AND GROUND ANCHORING FLANGE. NDS (#EP–2450) OR APPROVED EQUAL.
5. CONTRACTOR SHALL SUBMIT A MINIMUM OF (3) 1–PINT SOIL SAMPLES (2 IN TURF AREAS AND 1 IN PLANTING BEDS) FOR AGRICULTURAL SUITABILITY SOILS TESTING (STANDARD TEST A05–N) AT A QUALIFIED SOILS TESTING LABORATORY. COLLECT SOIL SAMPLES WITHIN PROPOSED PLANTING AREAS (PA), AFTER THE COMPLETION OF GRADING OPERATIONS. KEEP TURF AREA AND SHRUB/GROUND COVER AREA SAMPLES SEPARATE. PROVIDE (1) COPY OF THE SOIL REPORTS AND RECOMMENDATIONS TO THE CONTRACTING OFFICER PRIOR TO CARRYING OUT CORRECTIVE MEASURES PER THE ANALYSIS.
6. FINAL LOCATION OF STEEL EDGING SHALL BE COORDINATED WITH LANDSCAPE ARCHITECT AND CONTRACTING OFFICER.
7. CONTRACTOR SHALL MAINTAIN ALL PLANTING AREAS FOR A PERIOD OF ONE YEAR AND A MINIMUM OF ONE COMPLETE GROWING SEASON.

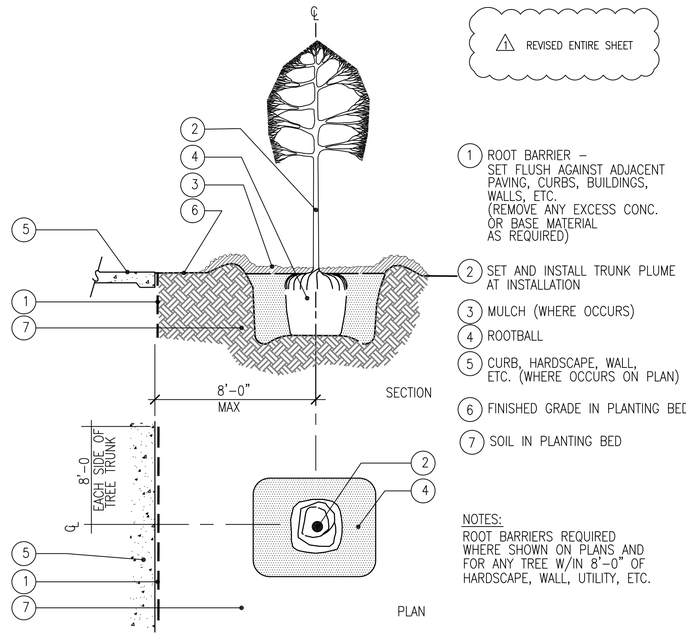

1 ROOT BARRIER – SET FLUSH AGAINST ADJACENT PAVING, CURBS, BUILDINGS, WALLS, ETC. (REMOVE ANY EXCESS CONC. OR BASE MATERIAL AS REQUIRED)
2 SET AND INSTALL TRUNK PLUME AT INSTALLATION
3 MULCH (WHERE OCCURS)
4 ROOTBALL
5 CURB, HARDSCAPE, WALL, ETC. (WHERE OCCURS ON PLAN)
6 FINISHED GRADE IN PLANTING BED
7 SOIL IN PLANTING BED

NOTES:
ROOT BARRIERS REQUIRED WHERE SHOWN ON PLANS AND FOR ANY TREE W/IN 8'–0" OF HARDSCAPE, WALL, UTILITY, ETC.

C5 ROOT BARRIER
NO SCALE

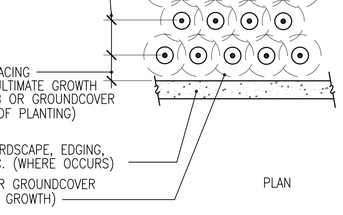

B3 PLANT SPACING
NO SCALE

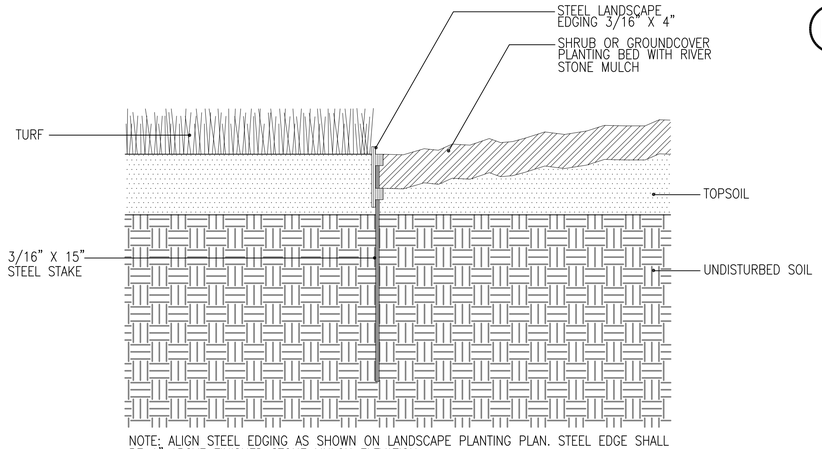

A2 STEEL EDGING DETAIL
NO SCALE

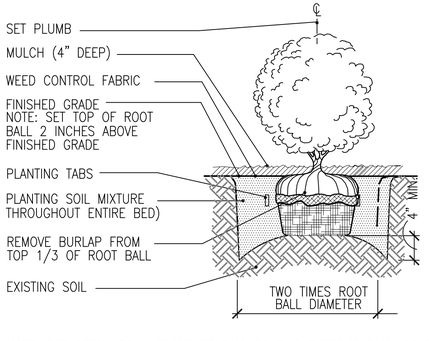

A3 SHRUB PLANTING
NO SCALE

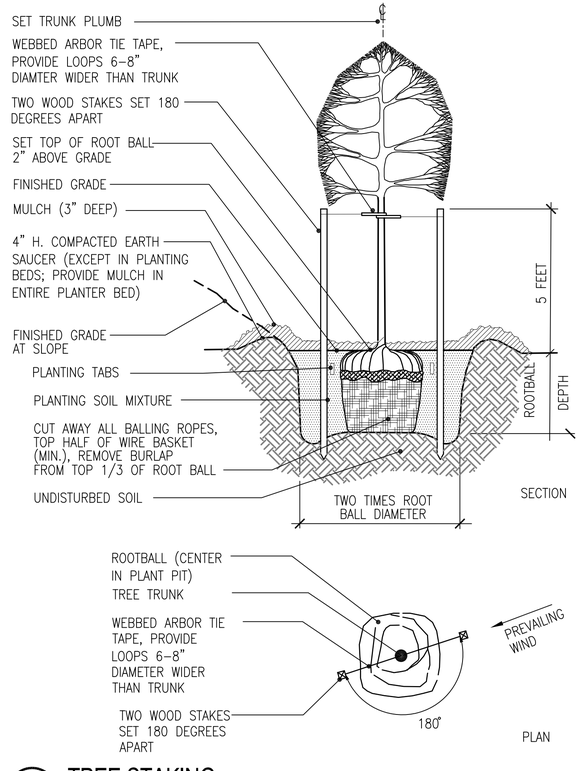

A5 TREE STAKING
NO SCALE

01/21/16	1 REVISED ENTIRE SHEET
	GENERAL REVISIONS 01

NAVFAC

A/E INFO
APPROVED
FOR COMMANDER NAVFAC
ACTIVITY
HERM ROLLINGS
SATISFACTORY TO DATE MM/DD/YY
DES: BTG DRW: BTG CHK: BTG
JTL/APK: JTL/APK
BRANCH MANAGER
CHIEF ENG/ARCH: RLW
FIRE PROTECTION: DPS

DEPARTMENT OF THE NAVY
NAVAL FACILITIES ENGINEERING COMMAND
NAVAL FACILITIES ENGINEERING COMMAND NORFOLK NAVAL STATION
HAMPTON ROADS IPT
SURFACE COMBAT SYSTEM CENTER
WALLOPS ISLAND, VA
P1602 - CONVERSION AND RENOVATION OF MILITARY FAMILY HOUSING
PLANT MATERIAL SCHEDULE, DETAILS AND NOTES

SCALE:
EPROJECT NO.: 1366573
CONSTR. CONTR. NO.:
NAVFAC DRAWING NO. 12708276
SHEET 24 OF 124
LP501
DRAWFORM REVISION: 10 MARCH 2009

FILE NAME: P:\VA\Wallops Island\MILCON\2016_1366573_P1602_08B_SkeetletLineRenovation&Conversion\B_Design\Drawings\Sheet Files\06_Landscape\P1602–1366573–LP501.dwg LAYOUT NAME: LP501 PLOTTED: Thursday, January 28, 2016 – 1:57pm USER: taylor.gould