STANDARD ARCHITECTURAL SYMBOLS

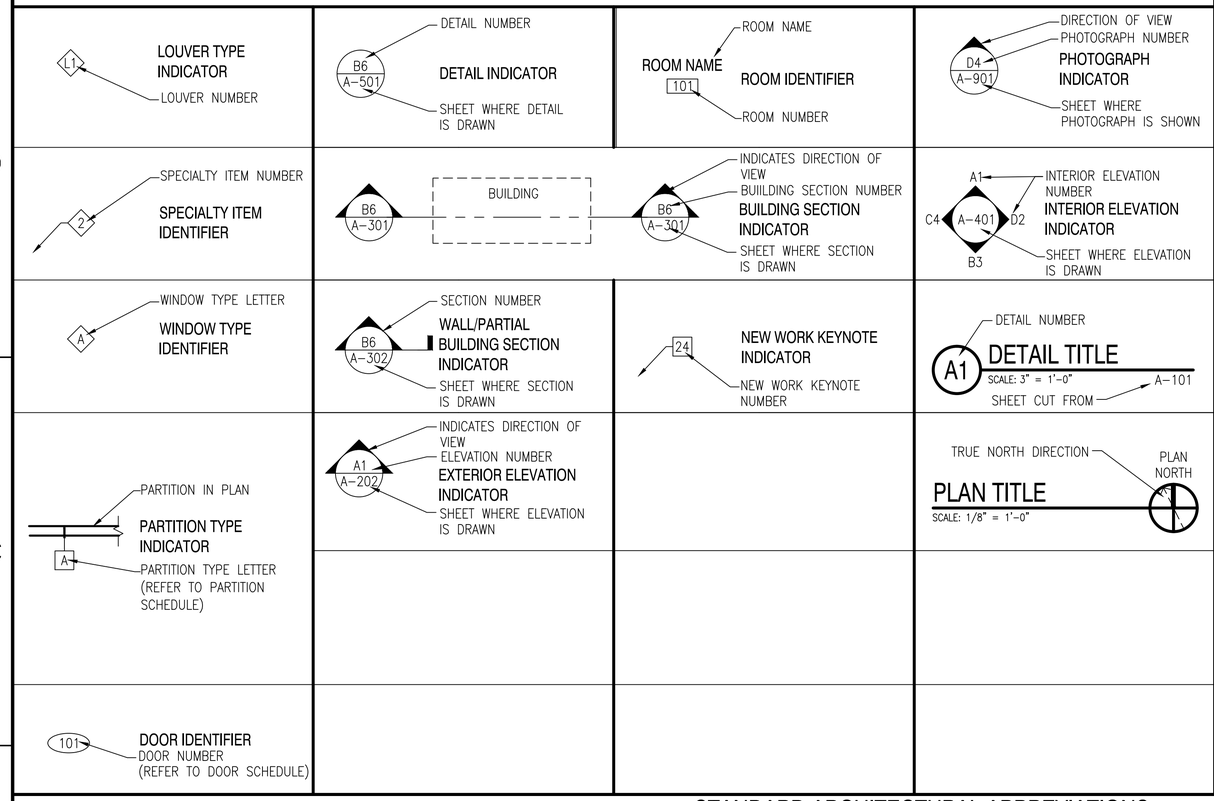

STANDARD MATERIALS LEGEND

SECTION VIEW		WOOD – ROUGH		WOOD BLOCKING
		CONCRETE MASONRY UNIT		BRICK
		CAST-IN-PLACE CONCRETE		PLYWOOD-LARGE SCALE
		STEEL		GLASS-LARGE SCALE
		EARTH/COMPACT FILL		ACOUSTICAL TILE
		BATT/LOOSE FILL INSULATION		PLYWOOD-SMALL SCALE
		POROUS FILL/GRAVEL		CERAMIC TILE-LARGE SCALE
		RIGID INSULATION		SAND/MORTAR/PLASTER
		GYPSUM BOARD		
		RESILIENT FLOORING/ PLASTIC LAMINATE		
		ALUMINUM		
		FINISHED WOOD		
		MARBLE		
ELEVATION/PLAN VIEW		CONCRETE/GYPSUM BOARD		
		SHEET METAL-LARGE SCALE		
		GLASS		

GENERAL ARCHITECTURAL NOTES

1. ALL ITEMS INDICATED TO BE REMOVED SHALL BE DISPOSED OF OFF SITE BY THE CONTRACTOR UNLESS OTHERWISE NOTED.
2. ALL MATERIALS SHALL BE NEW AND PROVIDED BY THE CONTRACTOR UNLESS SPECIFICALLY NOTED AS PROVIDED BY THE GOVERNMENT.
3. ALL WOOD BLOCKING AND MISCELLANEOUS STEEL SHOWN IN DETAILS AND SECTIONS SHALL BE CONTINUOUS UNLESS SPECIFICALLY NOTED OTHERWISE.
4. THE CONTRACTOR SHALL VERIFY ALL FIELD CONDITIONS AND DIMENSIONS PRIOR TO PROCEEDING WITH THE WORK. ALL DISCREPANCIES SHALL BE BROUGHT TO THE IMMEDIATE ATTENTION OF THE CONTRACTING OFFICER IN WRITING.
5. DIMENSIONS INDICATED FOR NEW WORK ARE TO FACE OF STUD, FACE OF MASONRY OR FACE OF EXISTING SURFACES UNLESS OTHERWISE NOTED.

STANDARD ARCHITECTURAL ABBREVIATIONS

AB	ANCHOR BOLT	CNSTR	CONSTRUCTION	FIN	FNISH	MTL	METAL	PEJ	PREMOLDED EXPANSION JOINT	STD	STANDARD
ACS PNL	ACCESS PANEL	CONT	CONTINUE	FG	FIGURE	MFG	MANUFACTURING	PL	PROPERTY LINE	STOR	STORAGE
ADJ	ADJUSTABLE	CORR	CORRIDOR	FIN FLR	FINISHED FLOOR	MIN	MINIMUM, MINUTE	PLAS	PLASTER, PLASTIC	STR	STRAIGHT STRIKE, STRINGERS
ALUM	ALUMINUM	CPT	CARPET	FOF	FACE OF FINISH	MISC	MISCELLANEOUS	PLYWD	PLYWOOD	SUSP	SUSPEND
ALT	ALTERNATE, ALTITIUDE	CT	CERAMIC TILE	FOM	FACE OF MASONRY	MO	MOTOR OPERATED, MASONRY OPENING	PNL	PANEL	T&B	TOP AND BOTTOM
ANOD	ANODIZED	CTR	CENTER	FOS	FACE OF STUD, FACE OF SLAB			PRELIM	PRELIMINARY	TEL	TELEPHONE
APPROX	APPROXIMATE	D	DEPTH, DEEP	FR	FRAME, FIRE RATING, FIRE RESISTANT	MTD	MOUNTED	PSF	POUNDS PER SQUARE FOOT	TOS	TOP OF SLAB/STEEL
ARCH	ARCHITECT	DEG	DEGREE	FRTW	FIRE RETARDANT TREATED WOOD	MTG	MOUNTNG, MEETING	PSI	POUNDS PER SQUARE INCH	THRES	THRESHOLD
ASPH	ASPHALT	DEMO	DEMOLITION	FT	FOOT, FEET	MWP	MEMBRANE WATERPROOFING	PT	PAINT	THRU	THROUGH
ATC	ACOUSTICAL TILE CEILING	DET	ETAIL	FTG	FOOTING	N	NORTH	QT	QUARRY TILE	TYP	TYPICAL
BD	BOARD	DIA	DIAMETER	GA	GAGE	NIC	NOT IN CONTRACT	R	RADIUS, RISER	UON	UNLESS OTHERWISE NOTED
BLDG	BUILDING	DIM	DIMENSION	GALV	GALVANIZED	NO	NUMBER	RA	RETURN AIR	V	VOLT
BLW	BELOW	DS	DOWNSPOUT	GFCI	GOVERNMENT FURNISHED GOVERNMENT INSTALLED	NOM	NOMINAL	RAD	RETURN AIR DUCT	VAR	VARIATION
BM	BEAM	DW	DISHWASHER			NTS	NOT TO SCALE	RB	RESILIENT BASE	VB	VINYL BASE
BOT	BOTTOM	DR	DRAIN	GL	GLASS, GROUND LEVEL	OA	OUTSIDE AIR	RD	ROOF DRAIN, ROAD	VCT	VINYL COMPOSITION TILE
BOS	BOTTOM OF SLAB/STEEL	DWG	DRAWING	GR	GROSS	OC	ON CENTER	REFL	REFLECT	VENT	VENTILATION, VENTILATOR
BRG	BEARING	E	EAST	GSU	GLAZED STRUCTURAL UNIT	OD	OUTSIDE DIAMETER/DIMENSION	REFR	REFRIGERATION	VERT	VERTICAL
BSMT	BASEMENT	EA	EACH	GYP	GYPSUM			REINF	REINFORCE	VEST	VESTIBULE
BTWN	BETWEEN	EIFS	EXTERIOR INSULATION & FINISH	HB	HOSE BIB	OPH	OPPOSITE HAND	REQD	REQUIRED	VS	VENT STACK
C TO C	CENTER TO CENTER			HDW	HARDWARE	OPNG	OPENING	REV	REVISION	VTR	VENT THROUGH ROOF
CAB	CABINET	EJ	EXPANSION JOINT	HM	HOLLOW METAL	OPP	OPPOSITE	RF	RESILIENT FLOORING	VWC	VINYL WALL COVERING
CEM	CEMENT	EL	ELEVATION	HORIZ	HORIZONTAL	OPT	OPTIONAL	RL	ROOF LEADER	W	WASTE, WATT, WEST, WIDE
CER	CERAMIC	ELEC	ELECTRIC	HT	HEIGHT	PCT	PERCENT	RM	ROOM	W/	WITH
CI	CAST IRON	EPDM	ETHLENE PROPYLENE DIENE MONOMER	HW	HOT WATER HEATER	PEJ	PREMOLDED EXPANSION JOINT	RND	ROUND	W/O	WITHOUT
CIP	CAST IRON PIPE			HVY	HEAVY	PL	PROPERTY LINE	RO	ROUGH OPENING	WC	WATER CLOSET, WALL COVERING
CJ	CONTROL JOINT,CONSTRUCTION JOINT	EQ	EQUAL	ID	INSIDE DIAMETER	PLAS	PLASTER, PLASTIC	RS	ROUGH SAWN	WD	WOOD
CLG	CEILING	EQUIP	EQUIPMENT	INSUL	INSULATION, INSULATED	PLYWD	PLYWOOD	RT	RIGHT	WH	WATER HEATER
CLG REG	CEILING REGISTER	EW	EACH WAY	INT	INTERIOR	PNL	PANEL	S	SOUTH	WP	WATERPROOFING, WEATHERPROOF, WORKING POINT
CLR	CLEAR	EWC	ELECTRIC WATER COOLER	J-BOX	JUNCTION BOX	PRELIM	PRELIMINARY	SAPC	SUSPENDED ACOUSTICAL PANEL CEILING		
CMU	CONCRETE MASORY UNIT	EXH	EXHAUST	JAN CLA	JANITOR CLOSET	PSF	POUNDS PER SQUARE FOOT	SCHED	SCHEDULE	WSCT	WAINSCOT
CND	CONDUIT	EXIST	EXISTING	LAV	LAVATORY	PSI	POUNDS PER SQUARE INCH	SECT	SECTION	WT	WEIGHT
CNDS	CONDENSATE	EXP	ESPANSION, EXPOSED, EXPAND	LB	POUND	PT	PAINT	SF	SQUARE FOOT	WWF	WELDED WIRE FABRIC
CNTR	COUNTER	EXT	EXTERIOR	LT	LIGHT	OPH	OPPOSITE HAND	SH	SHINGLES, SINGLE HUNG	XRMR	TRANSFORMER
CO	CLEANOUT	FD	FLOOR DRAIN	MACH	MACHINE	OPNG	OPENING	SIM	SIMILAR		
COL	COLUMN	FDTN	FOUNDATION	MATL	MATERIAL	OPP	OPPOSITE	SPC	SUSPENDED PLASTER CEILING		
CONC	CONCRETE	FF	FINISH FACE	MAX	MAXIMUM	OPT	OPTIONAL	SPEC	SPECIFICATION		
CONN	CONNECT	FHC	FIRE HOSE CABINET	MECH	MECHANICAL	PCT	PERCENT	SQ	SQUARE		

SYM	DESCRIPTION	DATE	APPR

NAVFAC

SEAL

A/E INFO

APPROVED

FOR COMMANDER NAVFAC

ACTIVITY
HERM RAWLINGS

SATISFACTORY TO DATE MM/DD/YY
DES -- DRW -- CHK --
PM/DM JTL/APK
BRANCH MANAGER TLD TLD
CHIEF ENG/ARCH RLW RLW
FIRE PROTECTION SLW DPS

DEPARTMENT OF THE NAVY
NAVAL FACILITIES ENGINEERING COMMAND
NAVAL FACILITIES ENGINEERING COMMAND NORFOLK, VA
HAMPTON ROADS IPT
SURFACE COMBAT SYSTEM CENTER
WALLOPS ISLAND, VA
HOUSING WELCOME CENTER
ARCHITECTURAL SYMBOLS, LEGENDS, ABBREVIATIONS & NOTES

SCALE: N/A
EPROJECT NO.: 1366574
CONSTR. CONTR. NO.
NAVFAC DRAWING NO.
12708205
SHEET 33 OF 70
A-001

DRAWFORM REVISION: 10 MARCH 2009

FILE NAME: P:\VA\Wallops Island\ME\CON\2016_1366574_P238_DBB_HousingWelcomeCenter\B_Design\Drawings\Sheet Files\08_Architectural\V238-1366574-A-001.dwg LAYOUT NAME: A-001 PLOTTED: Monday, December 07, 2015 - 8:53am USER: allen.kline
FILE NAME: P:\VA\Wallops Island\ME\CON\2016_1366574_P238_DBB_HousingWelcomeCenter\B_Design\Drawings\Sheet Files\08_Architectural\V238-1366574-A-001.dwg LAYOUT NAME: A-001 PLOTTED: Monday, December 07, 2015 - 8:53am USER: allen.kline

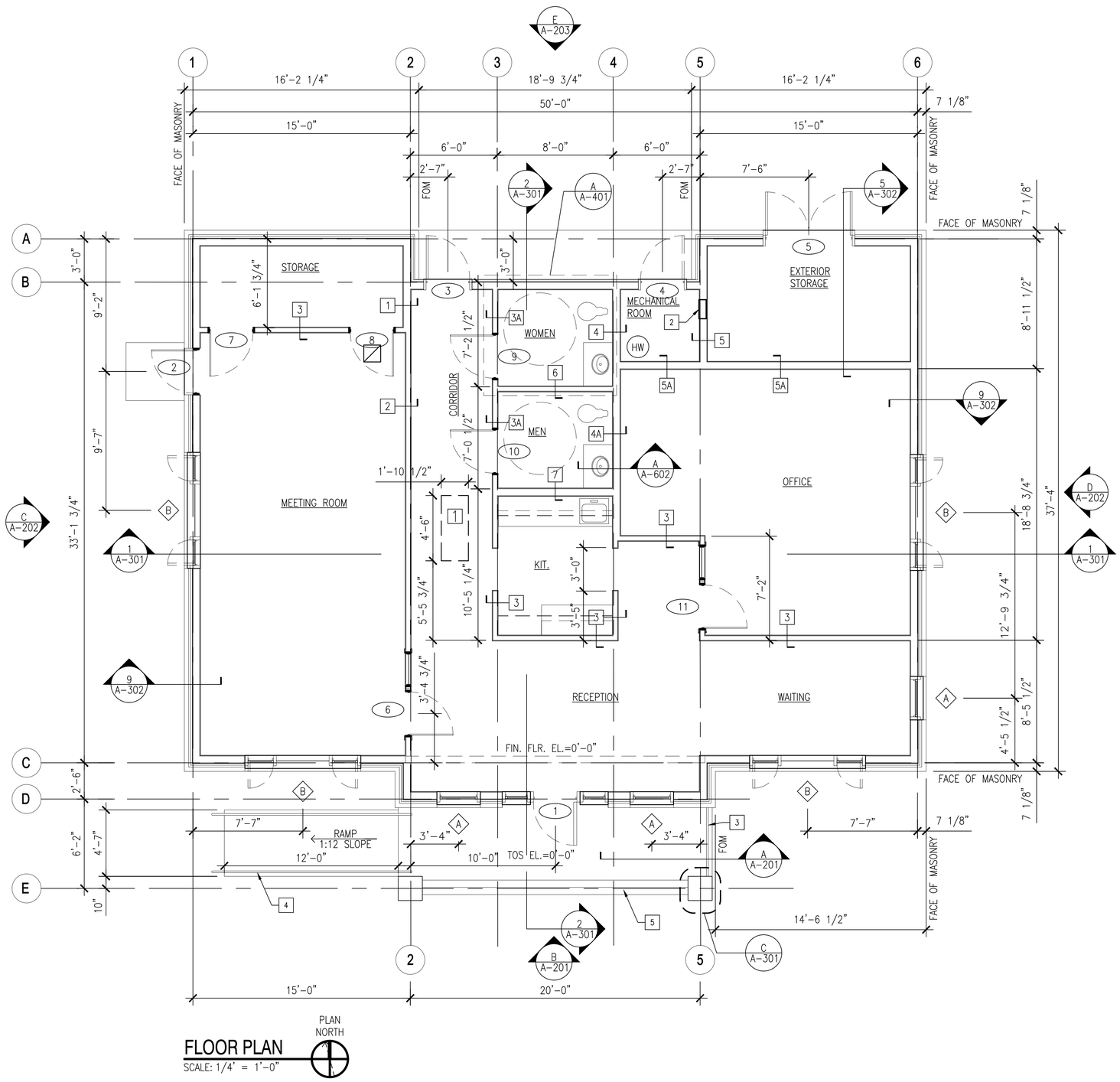

FLOOR PLAN

SCALE: 1/4" = 1'-0"

PLAN NORTH

GENERAL SHEET NOTES

1. REFER TO SHEET A-601 FOR DOOR SCHEDULE AND DETAILS.
2. REFER TO SHEET A-602 FOR WINDOW SCHEDULE AND DETAILS.
3. REFER TO SHEET A-303 FOR INTERIOR PARTITION TYPES.
4. ALIGN FACE OF STUD WITH GRID.
5. UNLESS OTHERWISE NOTED, DIMENSIONS ARE TO FACE OF STUD AND CENTERLINE OF DOORS AND WINDOWS.

NEW WORK KEYNOTES

1. ATTIC ACCESS HATCH WITH PULL DOWN STAIR.
2. ELECTRICAL PANEL BOX.
3. GUARDRAIL.
4. HANDRAIL.
5. PORCH STEPS.

GRAPHIC SCALE

1/4" = 1'-0" 0 1/2" 1" 2"

SYM	DESCRIPTION	DATE	APPR

NAVFAC

SEAL

A/E INFO

APPROVED

FOR COMMANDER NAVFAC

ACTIVITY: HERM RAWLINGS

SATISFACTORY TO DATE MM/DD/YY

DES DAY DRW AK CHK TLD

PM/DM JTL/APK

BRANCH MANAGER TLD

CHIEF ENG/ARCH RLW

FIRE PROTECTION DPS

DEPARTMENT OF THE NAVY
NAVAL FACILITIES ENGINEERING COMMAND
HAMPTON ROADS IPT

NAVAL FACILITIES ENGINEERING COMMAND
NORFOLK, VA

WALLOPS ISLAND, VA

SURFACE COMBAT SYSTEM CENTER

HOUSING WELCOME CENTER

FLOOR PLAN

SCALE: AS NOTED

EPROJECT NO.: 1366574

CONSTR. CONTR. NO.

NAVFAC DRAWING NO. 12708206

SHEET 34 OF 70

A-101

DRAWFORM REVISION: 10 MARCH 2009

FILE NAME: P:\VA\Wallops Island\MILCON\2016_1366574_P238_DBB_HousingWelcomeCenter\B_Design\Drawings\Sheet Files\08_Architecture\V238-1366574-A-101.dwg LAYOUT NAME: A-101 PLOTTED: Monday, December 07, 2015 - 8:55am USER: allen.kline

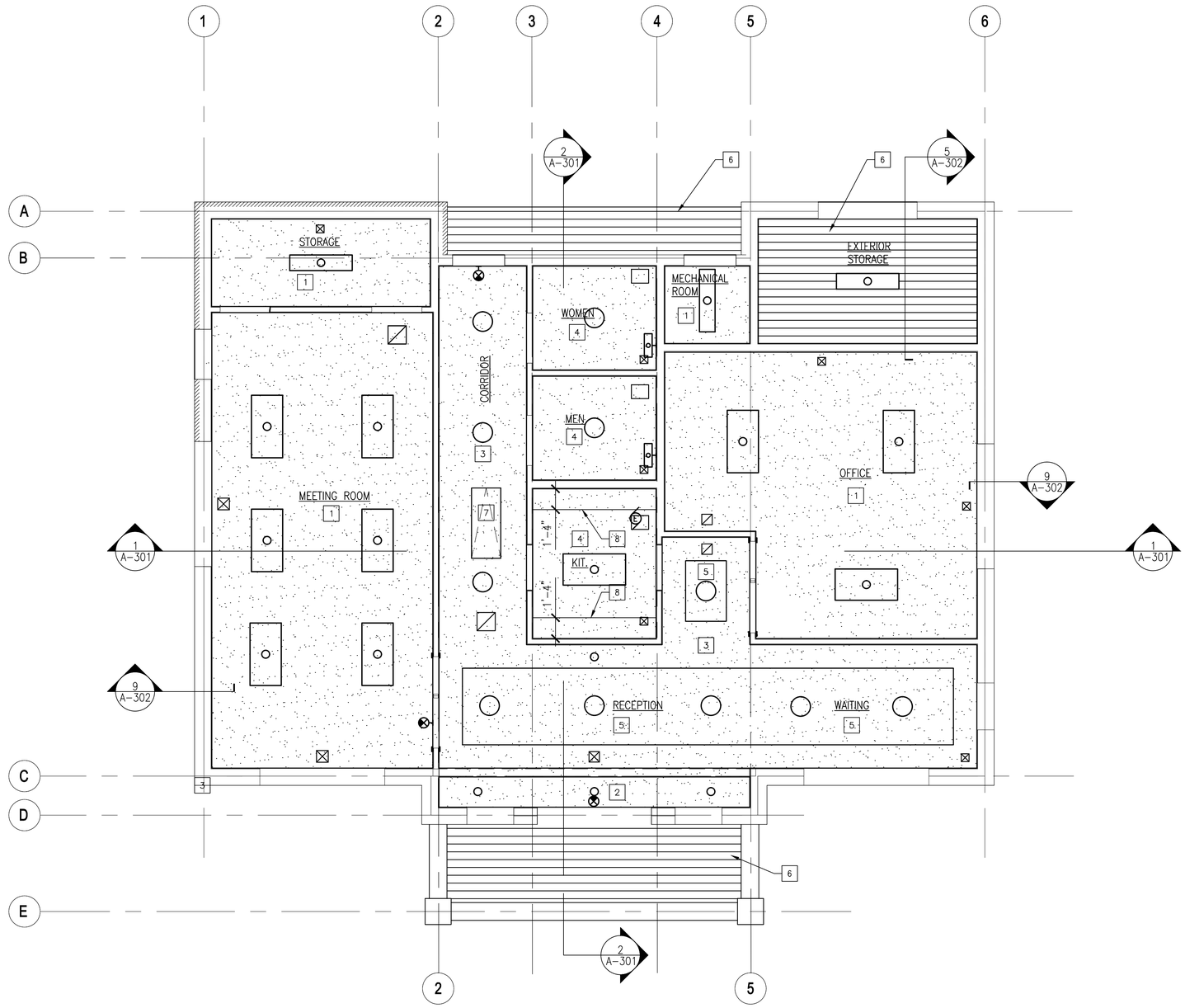

REFELCTED CEILING PLAN

SCALE: 1/4" = 1'-0"

GENERAL SHEET NOTES

NEW WORK KEYNOTES

1. 5/8" GYPSUM BOARD CEILING AT 10'-0" AFF.
2. 5/8" GYPSUM BOARD SOFFIT AT 9'-5" AFF. REFER TO DETAIL B/A-301.
3. 5/8" GYPSUM BOARD CEILING AT 9'-5" AFF.
4. 5/8" GYPSUM BOARD CEILING AT 8'-0" AFF.
5. 5/8" GYPSUM BOARD SOFFIT. REFER TO SOFFIT DETAIL A/A-301.
6. CEMENTITIOUS SOFFIT/CEILING. REFER TO 2/A-301 FOR ELEVATION.
7. ATTIC ACCESS HATCH. FRAMING AS REQUIRED.
8. 5/8" GYPSUM BOARD SOFFIT ABOVE WALL HUNG CABINETS. FRAMING AS REQUIRED.

PLAN NORTH

GRAPHIC SCALE

1/4" = 1'-0" 0 1/2" 1" 2"

SYM	DESCRIPTION	DATE	APPR

NAVFAC

SEAL

A/E INFO:

APPROVED

FOR COMMANDER NAVFAC

ACTIVITY: HERM RAWLINGS

SATISFACTORY TO DATE MM/DD/YY

DES DAY DRW AK CHK TLD

PM/DM JTL/APK

BRANCH MANAGER TLD

CHIEF ENG/ARCH RLW

FIRE PROTECTION DPS

DEPARTMENT OF THE NAVY
NAVAL FACILITIES ENGINEERING COMMAND
HAMPTON ROADS IPT
NAVAL FACILITIES ENGINEERING COMMAND NORFOLK, VA
SURFACE COMBAT SYSTEM CENTER WALLOPS ISLAND, VA

HOUSING WELCOME CENTER

REFLECTED CEILING PLAN

SCALE: AS NOTED

EFPROJECT NO.: 1366574

CONSTR. CONTR. NO.

NAVFAC DRAWING NO. 12708207

SHEET 35 OF 70

A-102

DRAWFORM REVISION: 10 MARCH 2009

FILE NAME: P:\VA\Wallops Island\MILCON\2016_1366574_P238_DBB_HousingWelcomeCenter\B_Design\Drawings\Sheet Files\08_Architecture\V238-1366574-A-102.dwg LAYOUT NAME: A-102 PLOTTED: Monday, December 07, 2015 - 8:57am USER: allen.kline

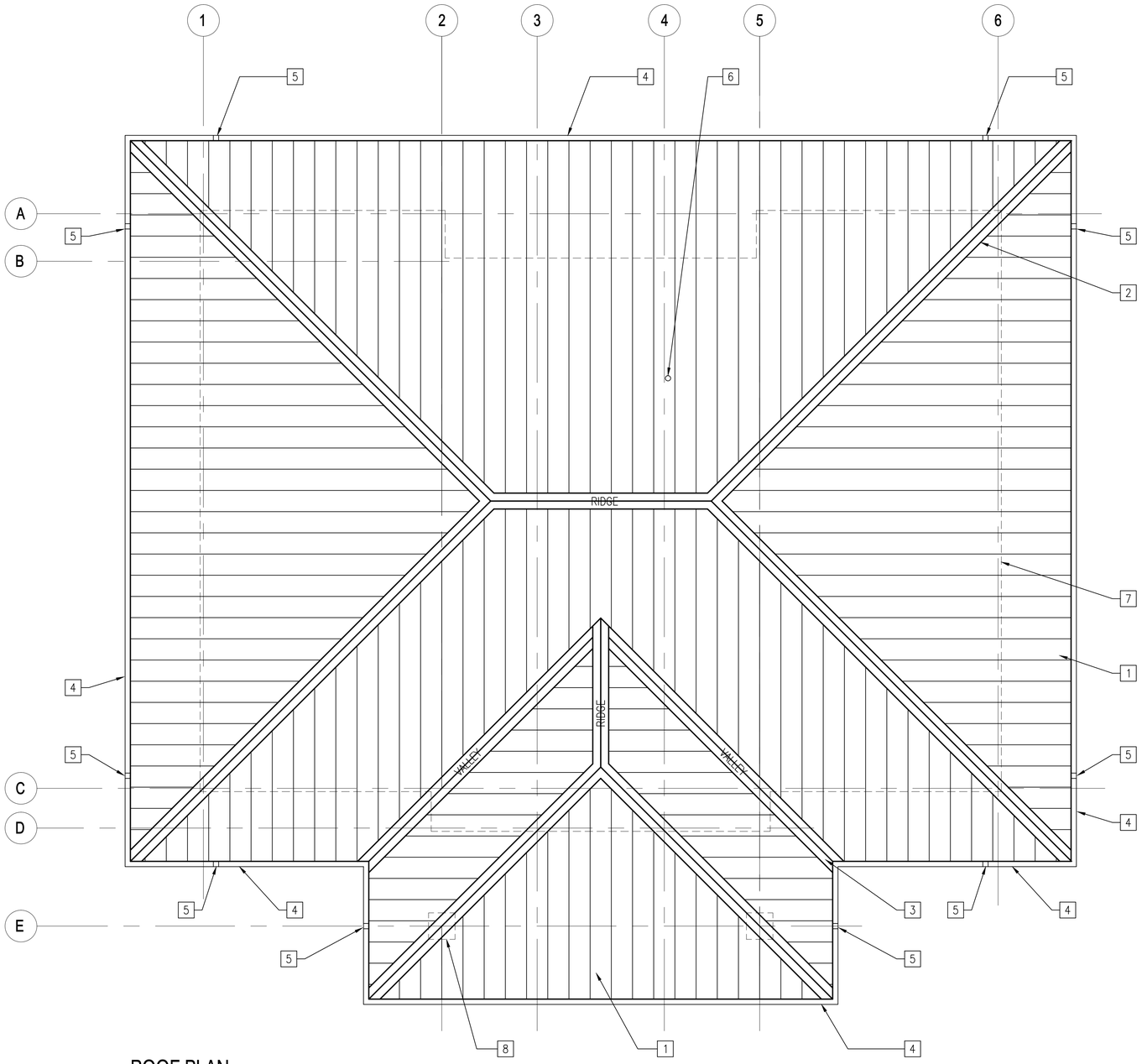

ROOF PLAN

SCALE: 1/4" = 1'-0"

GENERAL SHEET NOTES

1. REFER TO SHEET A-203 FOR EXTERIOR COLOR LEGEND.

NEW WORK KEYNOTES

1. STANDING SEAM METAL ROOF.
2. RIDGE CAP. TYPICAL UNLESS OTHERWISE NOTED.
3. VALLEY FLASHING.
4. ALUMINUM GUTTER.
5. ALUMINUM DOWNSPOUT.
6. PLUMBING VENT. FLASH PER MANUFACTURER'S DETAIL.
7. BUILDING OUTLINE BELOW.
8. COLUMN BELOW.

PLAN NORTH

GRAPHIC SCALE

1/4"=1'-0" 0' 2' 4' 8'

SYM	DESCRIPTION	DATE	APPR

NAVFAC

SEAL

A/E INFO

APPROVED

FOR COMMANDER NAVFAC

ACTIVITY: HERM RAWLINGS

SATISFACTORY TO DATE MM/DD/YY

DES DAY DRW AK CHK TLD

PM/DM JTL/APK

BRANCH MANAGER TLD TLD

CHIEF ENG/ARCH RLW RLW

FIRE PROTECTION SLW DPS

DEPARTMENT OF THE NAVY
NAVAL FACILITIES ENGINEERING COMMAND
HAMPTON ROADS IPT
NAVAL FACILITIES ENGINEERING COMMAND
NORFOLK, VA
SURFACE COMBAT SYSTEM CENTER
WALLOPS ISLAND, VA

HOUSING WELCOME CENTER

ROOF PLAN

SCALE: 1/4"=1'-0"

EPROJECT NO.: 1366574

CONSTR. CONTR. NO.

NAVFAC DRAWING NO. 12708208

SHEET 36 OF 70

A-103

DRAWFORM REVISION: 10 MARCH 2009

FILE NAME: P:\VA\Wallops Island\MILCON\2016_1366574_P238_DBB_HousingWelcomeCenter\B_Design\Drawings\Sheet Files\08_Architecture\V238-1366574-A-103.dwg LAYOUT NAME: A-103 PLOTTED: Monday, December 07, 2015 - 8:58am USER: allen.kline

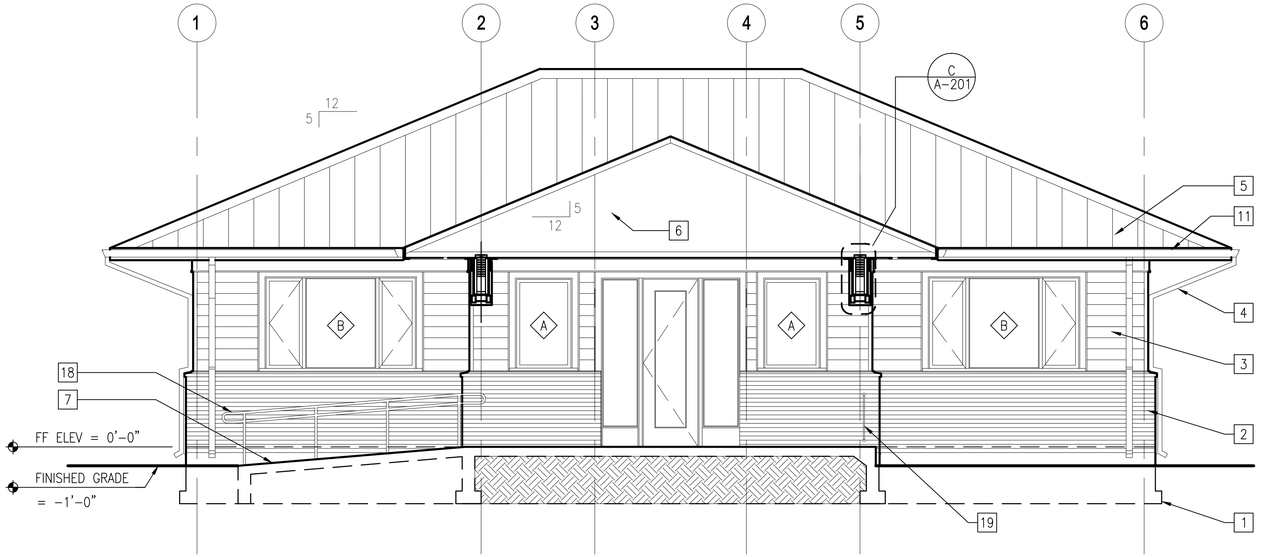

A SOUTH ELEVATION
SCALE: 1/4" = 1'-0" A-101

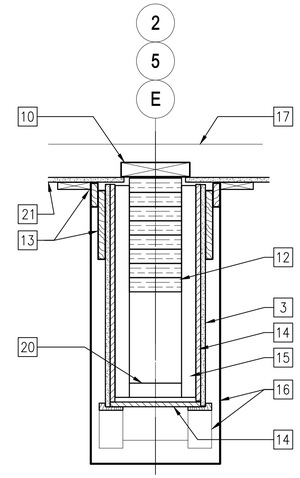

C BEAM DETAIL
SCALE: 1 1/2" = 1'-0" A-201, A-301

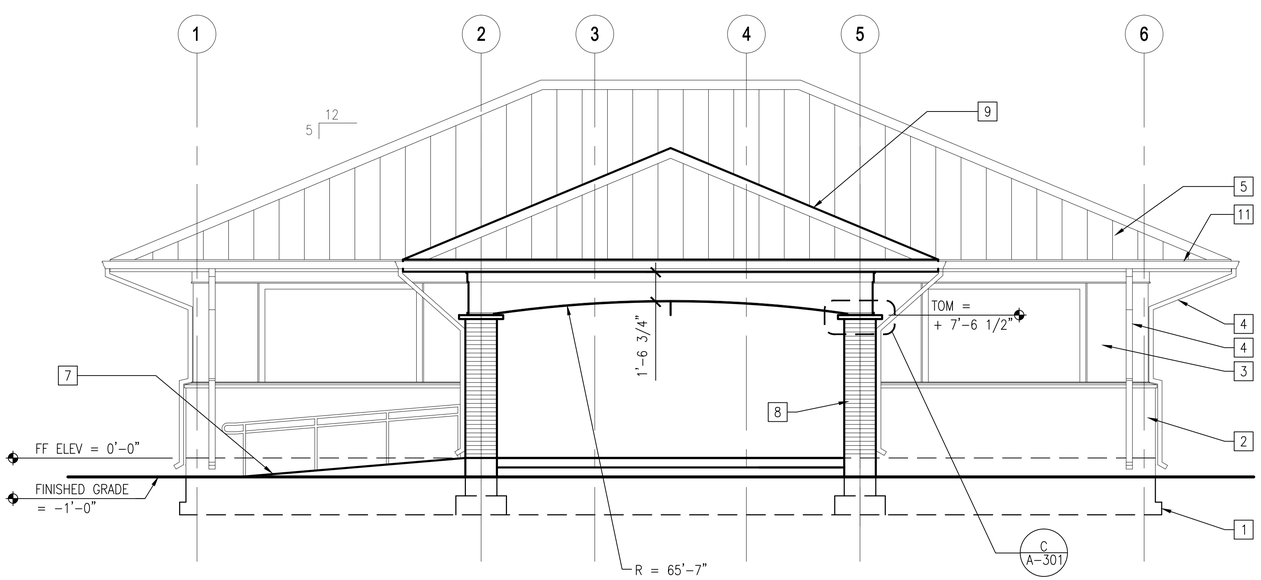

B SOUTH ELEVATION
SCALE: 1/4" = 1'-0" A-101

GENERAL SHEET NOTES

1. REFER TO SHEET A-203 FOR EXTERIOR COLOR LEGEND.

NEW WORK KEYNOTES

1. OUTLINE OF FOUNDATION. REFER TO S-101.
2. MASONRY VENEER.
3. CEMENTITIOUS SIDING.
4. ALUMINUM DOWNSPOUT.
5. STANDING SEAM METAL ROOFING.
6. SECTION THROUGH CANOPY, FRAMING NOT SHOWN FOR CLARITY.
7. HANDICAP ACCESS RAMP. SLOPE 1:12.
8. MASONRY COLUMN. REFER TO DETAIL D/A-301.
9. ENTRANCE CANOPY.
10. 2 x 8 PLATE BETWEEN TRUSS BOTTOM CHORDS.
11. ALUMINUM GUTTER. REFER TO 1/A-302.
12. GLUE LAMINATED BEAM. REFER TO NOTE 3 ON S-102..
13. 1 X 2 1/2 AND 1 X 7 MDO TRIM.
14. 1/2" PLYWOOD SUBSTRATE.
15. 2 X FURRING STRIP AT 16" O.C.
16. DECORATIVE 1X CEDAR TRIM AT WALL.
17. BOTTOM CHORD OF TRUSS.
18. RAMP HANDRAIL. REFER TO 1/A-203.
19. GUARDRAIL.
20. 2X BRACE AT 16" O.C.
21. CEMENTITIOUS SOFFIT.

GRAPHIC SCALE

1/4"=1'-0" 0' 2' 4' 8'

1-1/2"=1'-0" 0 6" 1' 1'-6"

SYM	DESCRIPTION	DATE	APPR

NAVFAC

SEAL

A/E INFO

APPROVED

FOR COMMANDER NAVFAC

ACTIVITY
HERM RAWLINGS

SATISFACTORY TO DATE MM/DD/YY

DES DAY DRW AK CHK TLD
PM/DM JTL/APK
BRANCH MANAGER TLD TLD
CHIEF ENG/ARCH RLW RLW
FIRE PROTECTION SLW DPS

DEPARTMENT OF THE NAVY
NAVAL FACILITIES ENGINEERING COMMAND
HAMPTON ROADS IPT
NAVAL FACILITIES ENGINEERING COMMAND NORFOLK, VA
SURFACE COMBAT SYSTEM CENTER WALLOPS ISLAND, VA
HOUSING WELCOME CENTER
BUILDING ELEVATIONS

SCALE: AS NOTED
EFPROJECT NO. 1366574
CONSTR. CONTR. NO.
NAVFAC DRAWING NO. 12708209
SHEET 37 OF 70
A-201

DRAWFORM REVISION: 10 MARCH 2009

FILE NAME: P:\VA\Wallops Island\WLCON\2016_1366574_P238_DBB_HousingWelcomeCenter\B_Design\Drawings\Sheet Files\08_Architecture\v238-1366574-A-201.dwg LAYOUT NAME: A-201 PLOTTED: Monday, December 07, 2015 - 8:59am USER: allen.kline

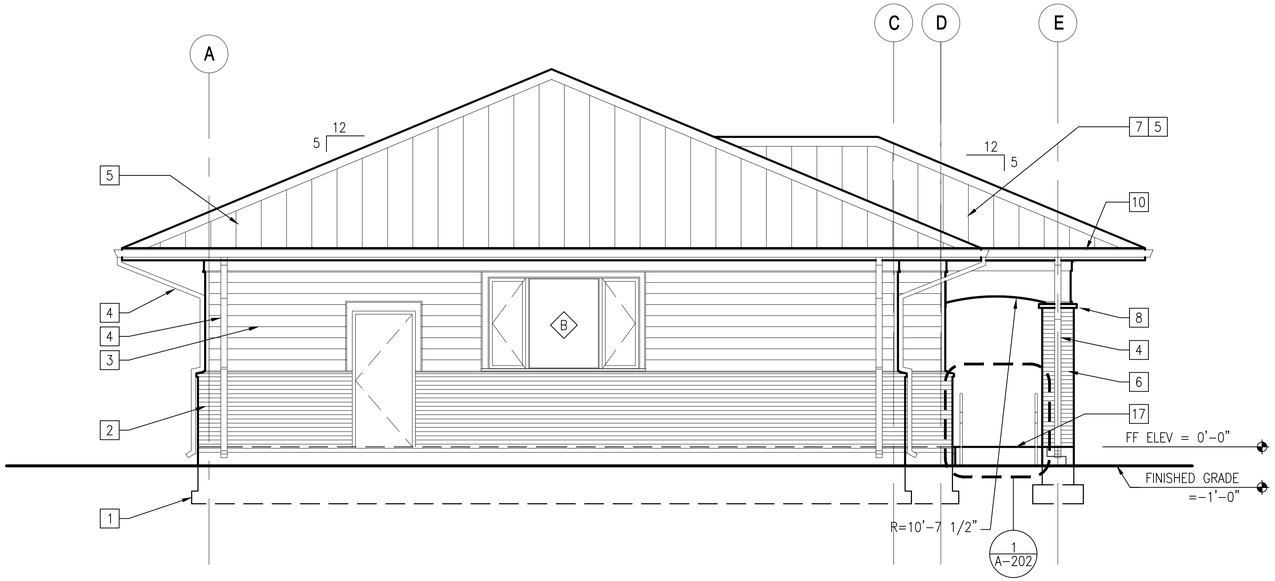

C WEST ELEVATION
SCALE: 1/4" = 1'-0" A-101

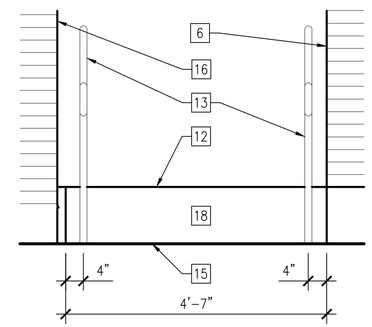

1 RAMP RAILING DETAIL
SCALE: 3/4" = 1'-0" A-202

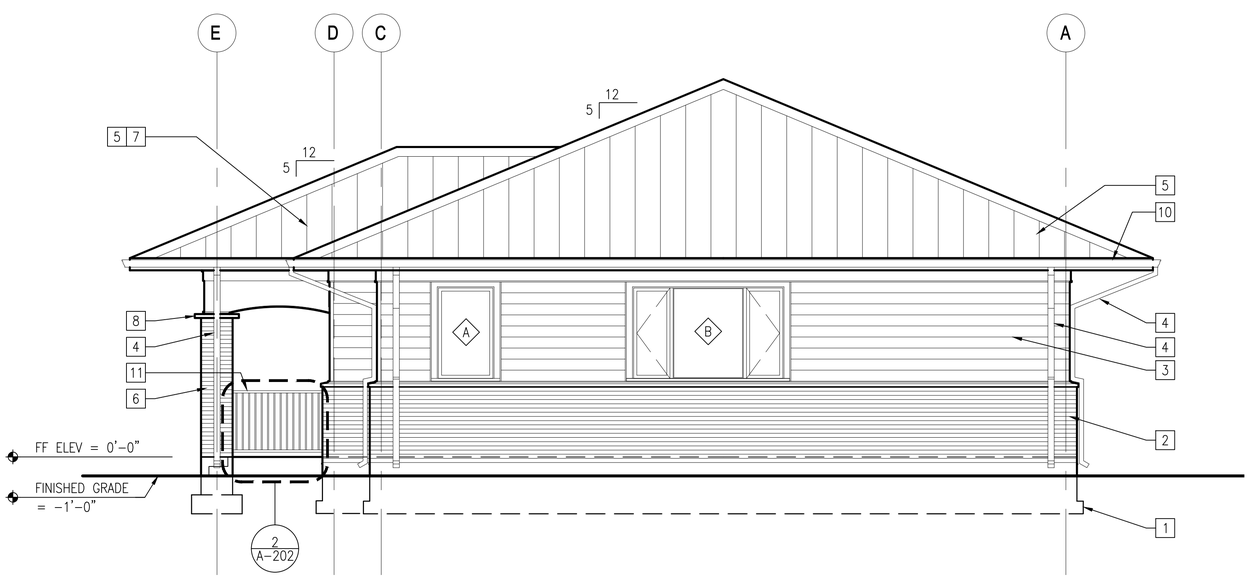

D EAST ELEVATION
SCALE: 1/4" = 1'-0" A-101

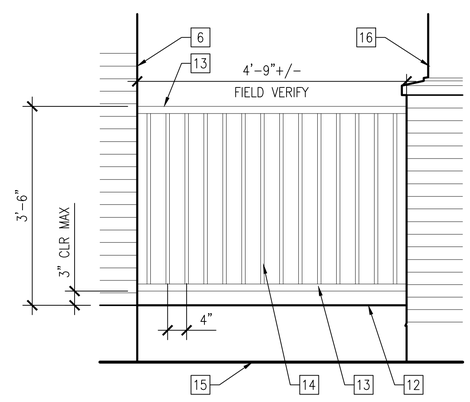

2 PORCH GUARDRAIL DETAIL
SCALE: 3/4" = 1'-0" A-202

GENERAL SHEET NOTES

1. REFER TO SHEET A-203 FOR EXTERIOR COLOR LEGEND.

NEW WORK KEYNOTES

1. OUTLINE OF FOUNDATION. REFER TO S-101.
2. MASONRY VENEER.
3. CEMENTITIOUS SIDING.
4. ALUMINUM GUTTER AND DOWNSPOUT.
5. STANDING SEAM METAL ROOFING.
6. MASONRY COLUMN.
7. ENTRANCE CANOPY.
8. PRECAST CONCRETE COLUMN CAP. REFER TO C/A-301.
9. NOT USED.
10. ALUMINUM GUTTER, REFER TO 1/A-302.
11. GUARDRAIL. REFER TO 2/A-202.
12. PORCH SURFACE.
13. 1 1/2" DIA PIPE (NOM.).
14. 3/4" DIA PICKETS.
15. FINISHED GRADE.
16. OUTLINE OF BUILDING.
17. ACCESSIBLE RAMP. REFER TO 1/A-202.
18. RAMP SURFACE.

GRAPHIC SCALE

1/4"=1'-0" 0' 2' 4' 8'

3/4"=1'-0" 0 1' 2' 3'

SYM	DESCRIPTION	DATE	APPR

NAVFAC

SEAL

A/E INFO

APPROVED

FOR COMMANDER NAVFAC

ACTIVITY
HERM RAWLINGS

SATISFACTORY TO DATE MM/DD/YY

DES DAY DRW AK CHK TLD

PM/DM JTL/APK

BRANCH MANAGER TLD

CHIEF ENG/ARCH RLW

FIRE PROTECTION DPS

DEPARTMENT OF THE NAVY
NAVAL FACILITIES ENGINEERING COMMAND
HAMPTON ROADS IPT

NAVAL FACILITIES ENGINEERING COMMAND
NORFOLK, VA

SURFACE COMBAT SYSTEM CENTER
WALLOPS ISLAND, VA

HOUSING WELCOME CENTER

BUILDING ELEVATIONS

SCALE: AS NOTED

EPROJECT NO.: 1366574

CONSTR. CONTR. NO.

NAVFAC DRAWING NO.
12708210

SHEET 38 OF 70

A-202

DRAWFORM REVISION: 10 MARCH 2009

FILE NAME: P:\VA\Wallops Island\MLCON\2016_1366574_P238_DRB_HousingWelcomeCenter\B_Design\Drawings\Sheet Files\V8_Architectural\H238-1366574-A-202.dwg LAYOUT NAME: A-201 PLOTTED: Monday, December 07, 2015 - 9:00am USER: allen.kline

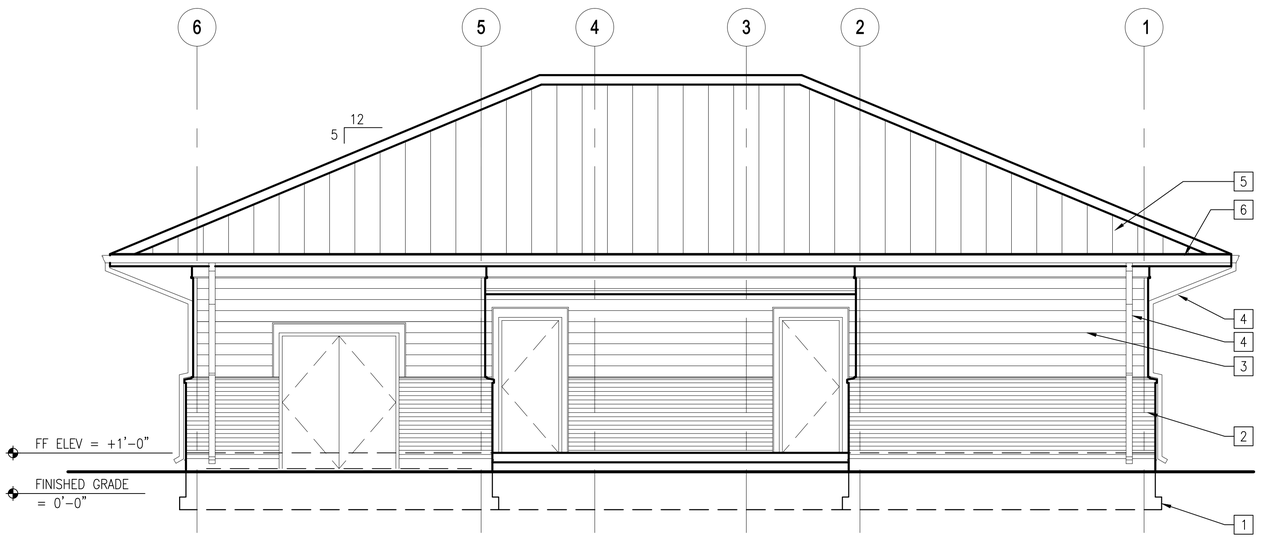

E REAR ELEVATION
SCALE: 1/4" = 1'-0" A-101

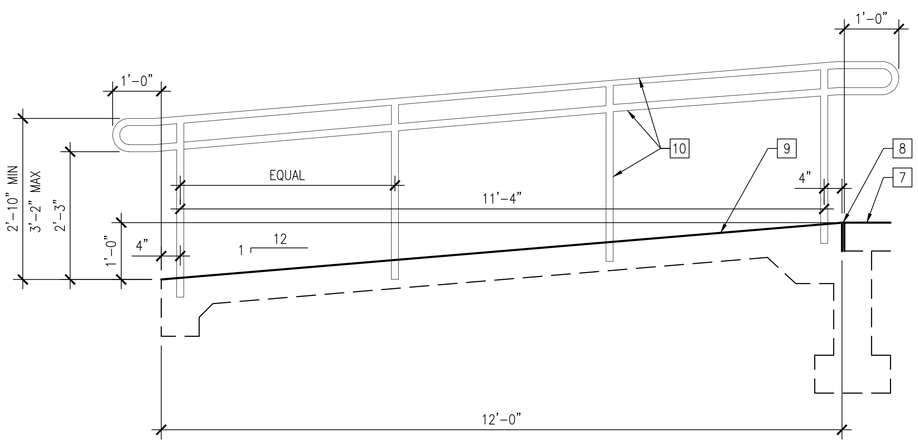

1 RAMP HANDRAIL DETAIL
SCALE: 3/4" = 1'-0" A-101

NEW WORK KEYNOTES

1. OUTLINE OF FOUNDATION. REFER TO S-101.
2. MASONRY VENEER.
3. CEMENTITIOUS SIDING.
4. ALUMINUM GUTTER AND DOWNSPOUT.
5. STANDING SEAM METAL ROOFING.
6. ALUMINUM GUTTER. REFER TO 1/A-302.
7. PORCH SLAB.
8. 1/2" EXPANSION JOINT FILLER MATERIAL.
9. RAMP SLAB. REFER TO
10. 1 1/2" DIA PIPE (NOM.) HANDRAIL AND POSTS. EMBED POSTS INTO SLAB..

COLOR LEGEND

WINDOWS – WHITE

GUTTERS AND DOWNSPOUTS – WHITE

PRECAST CONCRETE – ROCKCAST, WHEATSTONE

BRICK – GENERAL SHALE, COLONY POINT

MORTAR – WORKRITE, COLOR #2906

SIDING – JAMES HARDIE, TIMBER BARK

STANDING SEAM ROOF – CENTRIA, LEE IVORY

CEDAR TRIM – NATURAL (UNFINISHED)

NOTE:
FINISHES INDICATED ARE THE APPROVED BASIS OF DESIGN TO CONVEY COLOR, PATTERN, TEXTURE, AND SALIENT CHARACTERISTICS ONLY. THE LISTING OF MANUFACTURER INFORMATION IS NOT INTENDED TO LIMIT THE SELECTION OF PRODUCTS PROVIDED BY OTHER MANUFACTURERS. PRODUCT SUBSTITUTIONS MEETING THESE CRITERIA WILL BE CONSIDERED AND MUST BE REVIEWED BY THE ARCHITECT OF RECORD AND APPROVED BY THE CONTRACTING OFFICER.

GRAPHIC SCALE

1/4"=1'-0" 0' 2' 4' 8'
3/4"=1'-0" 0 1' 2' 3'

SYM	DESCRIPTION	DATE	APPR

NAVFAC

SEAL

A/E INFO

APPROVED

FOR COMMANDER NAVFAC

ACTIVITY
HERM RAWLINGS

SATISFACTORY TO DATE MM/DD/YY
DES DAY DRW AK CHK TLD
PM/DM JTL/APK
BRANCH MANAGER TLD
CHIEF ENG/ARCH RLW
FIRE PROTECTION DPS

DEPARTMENT OF THE NAVY
NAVAL FACILITIES ENGINEERING COMMAND
NAVAL FACILITIES ENGINEERING COMMAND
NORFOLK, VA
HAMPTON ROADS IPT
SURFACE COMBAT SYSTEM CENTER
WALLOPS ISLAND, VA
HOUSING WELCOME CENTER
BUILDING ELEVATION

SCALE: AS NOTED
EPROJECT NO.: 1366574
CONSTR. CONTR. NO.
NAVFAC DRAWING NO.
12708211
SHEET 39 OF 70
A-203

DRAWFORM REVISION: 10 MARCH 2009

FILE NAME: P:\VA\Wallops Island\MILCON\2016_1366574_PZ38_DBB_HousingWelcomeCenter\B_Design\Drawings\Sheet Files\08_Architectural\H238-1366574-A-203.dwg LAYOUT NAME: A-203 PLOTTED: Monday, December 07, 2015 - 9:01am USER: allen.kline

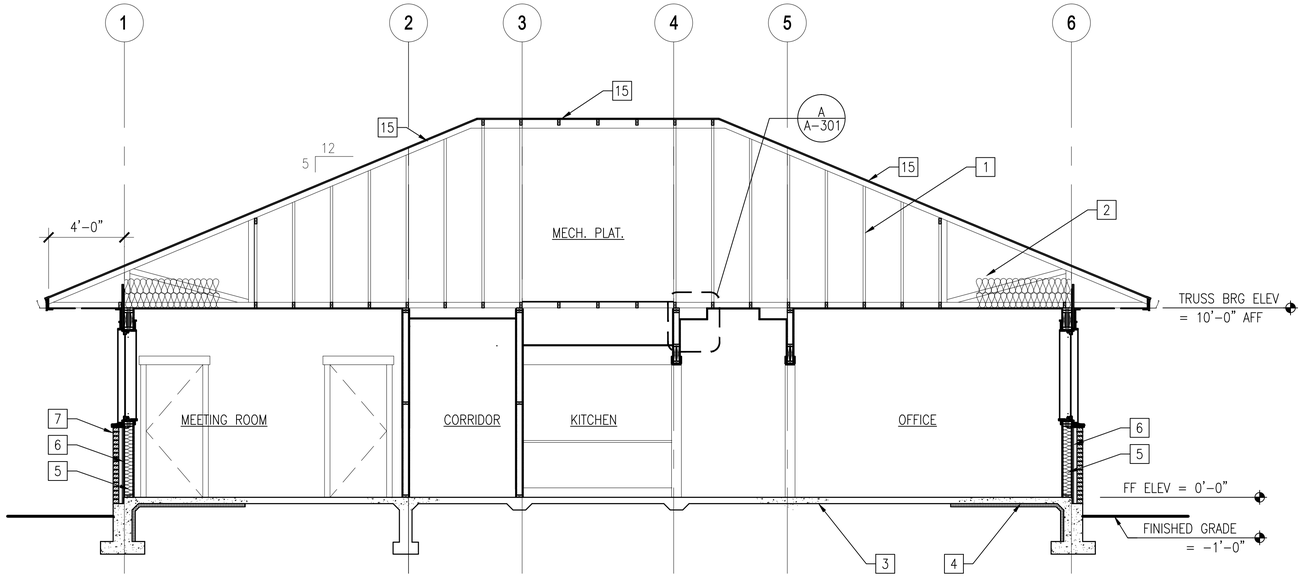

1 BUILDING SECTION
SCALE: 1/4' = 1'-0" A-101, A-102

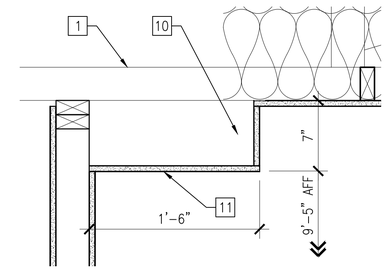

A SOFFIT DETAIL
SCALE: 1 1/2' = 1'-0" A-301

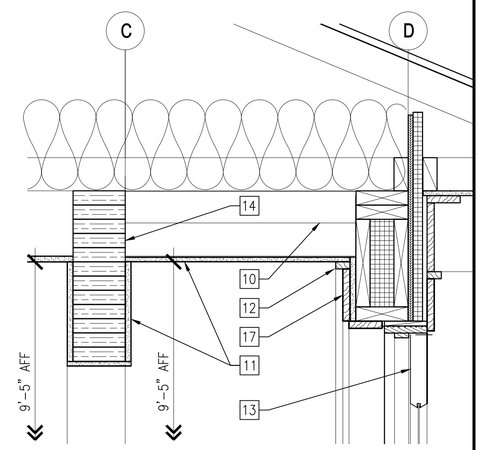

B SOFFIT DETAIL
SCALE: 1 1/2" = 1'-0" A-301

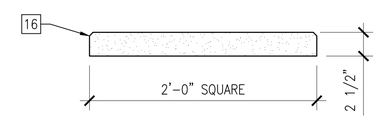

C COLUMN DETAIL
SCALE: 1 1/2' = 1'-0" A-201

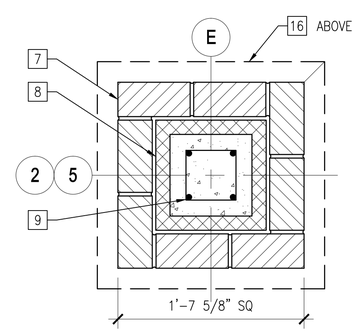

D COLUMN DETAIL
SCALE: 1 1/2' = 1'-0" A-301

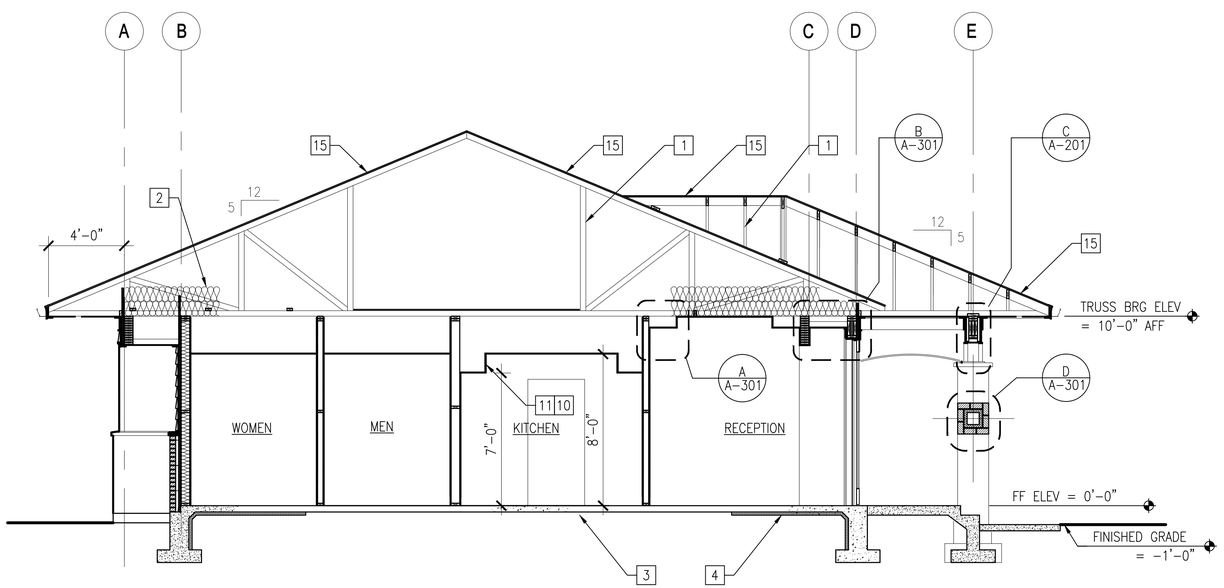

2 BUILDING SECTION
SCALE: 1/4' = 1'-0" A-101, A102

NEW WORK KEYNOTES

1. TRUSS FRAMING. REFER TO S-102.
2. R-38 BATT INSUALTION.
3. CONCRETE FLOOR SLAB. REFER TO S-101.
4. R-5 RIGID INSULATION CONTINUOUS UNDER SLAB.
5. R-21 BATT INSULATION.
6. 1" RIGID INSULATION IN WALL CAVITY.
7. MASONRY VENEER.
8. 12 X 12 CMU COLUMN BLOCK.
9. COLUMN. RERFER TO S-502 FOR REINFORCEMENT.
10. SOFFIT FRAMING AS REQUIRED.
11. 5/8" GYPSUM WALLBOARD.
12. 3/4" X 2 1/2" MDO TRIM.
13. ENTRY DOOR. REFER TO DOOR DETAILS ON A-601.
14. GLUE LAMINATED BEAM. REFER TO NOTE 2 ON S-102
15. PLYWOOD SHEATHING. REFER TO NOTE 4 ON S-002.
16. PRECAST CONCRETE COLUMN CAP WITH 3/8" CHAMFER.
17. 3/4" X 5 1/2" MDO TRIM.

GRAPHIC SCALE

1/4"=1'-0" 0' 2' 4' 8'
1"=1'-0" 0' 1/2' 1' 2'
1-1/2"=1'-0" 0 6" 1' 1'-6"

SYM	DESCRIPTION	DATE	APPR

NAVFAC

SEAL

A/E INFO

APPROVED
FOR COMMANDER NAVFAC
ACTIVITY
HERM RAWLINGS
SATISFACTORY TO DATE MM/DD/YY
DES DAY DRW AK CHK TLD
PM/DM JTL/APK
BRANCH MANAGER TLD TLD
CHIEF ENG/ARCH RLW RLW
FIRE PROTECTION SLW DPS

DEPARTMENT OF THE NAVY
NAVAL FACILITIES ENGINEERING COMMAND
HAMPTON ROADS IPT
NAVAL FACILITIES ENGINEERING COMMAND
NORFOLK, VA
SURFACE COMBAT SYSTEM CENTER
WALLOPS ISLAND, VA
HOUSING WELCOME CENTER
BUILDING SECTIONS

SCALE: AS NOTED
EPROJECT NO.: 1366574
CONSTR. CONTR. NO.
NAVFAC DRAWING NO.
12708212
SHEET 40 OF 70
A-301
DRAWFORM REVISION: 10 MARCH 2009

FILE NAME: P:\VA\Wallops Island\WLCON\2016_1366574_P238_DRB_JHousingWelcomeCenter\B_Design\Drawings\Sheet Files\08_Architectural\H238-1366574-A-301.dwg LAYOUT NAME: A-301 PLOTTED: Monday, December 07, 2015 - 9:03am USER: allen.kline

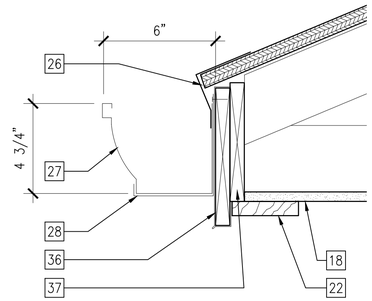

1 GUTTER DETAIL
SCALE: 3" = 1'-0" A-302

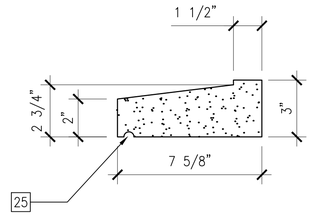

2 PRECAST SILL DETAIL
SCALE: 3" = 1'-0" A-302

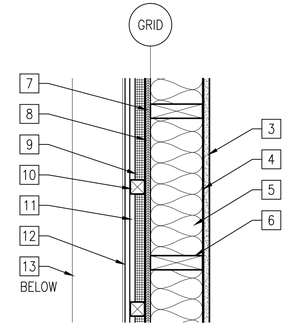

3 WALL DETAIL (PLAN)
SCALE: 1 1/2" = 1'-0" A-302

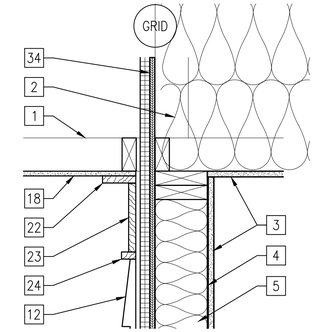

4 WALL SECTION
SCALE: 1 1/2" = 1'-0" A-302

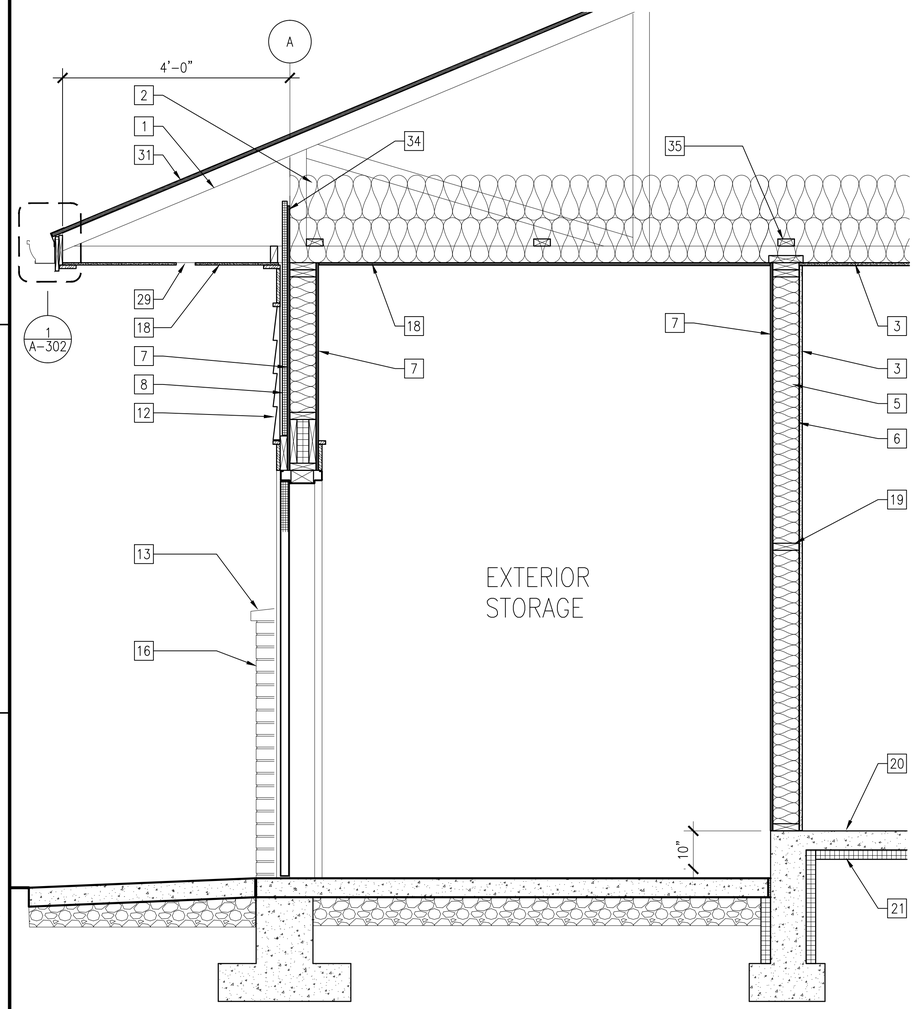

5 PARTIAL BUILDING SECTION
SCALE: 3/4" = 1'-0" A-101, A102

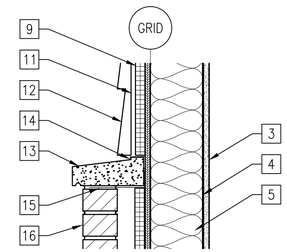

6 WALL DETAIL
SCALE: 1 1/2" = 1'-0" A-302

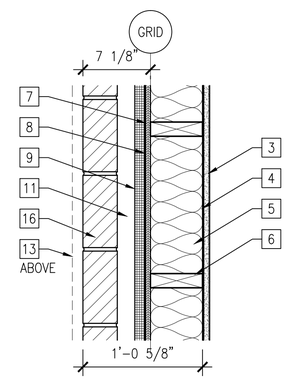

7 WALL DETAIL (PLAN)
SCALE: 1 1/2" = 1'-0" A-302

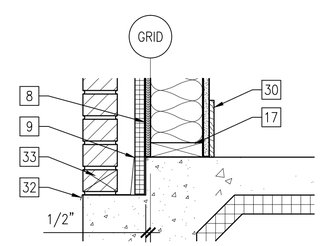

8 WALL SILL DETAIL
SCALE: 1 1/2" = 1'-0" A-302

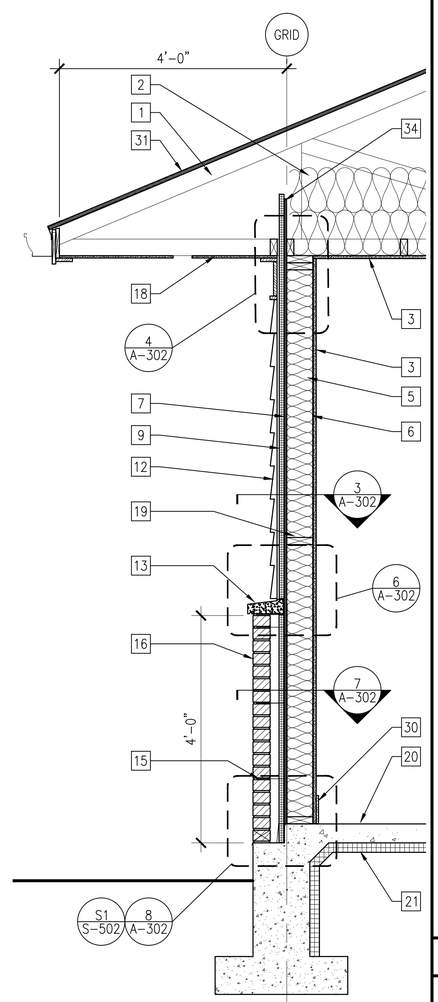

9 WALL SECTION
SCALE: 3/4" = 1'-0"101, A-102

GENERAL SHEET NOTES

1. ALIGN FACE OF STUD WITH GRID LINE.
2. NAIL CEMENTITIOUS SIDING TO 2 X 2 FURRING. LOCATE AND FASTEN FURRING TO SHEATHING MIDWAY BETWEEN STUDS.

NEW WORK KEYNOTES

1. TRUSS FRAMING.
2. R-38 BATT INSULATION CONTINUOUS.
3. 5/8" GYPSUM WALLBOARD.
4. MOISTURE BARRIER.
5. R-21 BATT INSULATION.
6. 6" STUD AT 16" O.C.
7. 1/2" PLYWOOD OR OSB SHEATHING.
8. VAPOR RETARDER OVER SHEATHING.
9. 1" RIGID INSULATION.
10. 2X2 FURRING ATTACHED BETWEEN STUDS.
11. AIR SPACE.
12. CEMENTITIOUS SIDING.
13. PRECAST SILL. REFER TO DETAIL 2/A-302.
14. SILL FLASHING, 4" MIN. VERTICAL LEG ATTACHED TO SHEATHING.
15. BRICK WALL TIE.
16. MASONRY VENEER.
17. 2X6 PLATE.
18. CEMENTITIOUS SOFFIT.
19. BLOCKING CONTINUOUS.
20. CONCRETE FLOOR SLAB.
21. R-5 RIGID INSULATION CONTINUOUS UNDER SLAB.
22. 3/4" x 3 1/2" CEDAR TRIM.
23. 3/4" X 7 1/4" CEDAR TRIM.
24. 3/4" X 1 1/2" CEDAR TRIM.
25. DRIP GROOVE.
26. FLASHING.
27. ALUMINUM GUTTER.
28. ALUMINUM GUTTER BRACKET AT 48" O.C.
29. 4" WIDE CONTINUOUS SOFFIT VENT / INSECT SCREEN.
30. 1/2' X 6" MDO PAINTED BASE TRIM.
31. PLYWOOD SHEATHING. REFER TO NOTE 1 ON S-102.
32. SILL FLASHING/TERMITE SHIELD. EXTEND INTERIOR VERTICAL LEG 4".
33. BRICK WEEP.
34. EXTEND PLYWOOD SHEATHING 12" ABOVE BOTTOM CHORD OF TRUSS TO SUPPORT RIGID INSULATION.
35. PERMANENT BOTTOM CHORD TRUSS BRACE.
36. WRAP 2X8 WITH BRAKE METAL. COLOR TO MATCH GUTTER.
37. 2X WOOD BLOCKING.

GRAPHIC SCALE

3/4"=1'-0" 0 1' 2' 3'
1-1/2"=1'-0" 0 6" 1' 1'-6"
3"=1'-0" 0 3" 6" 9"

SYM	DESCRIPTION	DATE	APPR

NAVFAC

SEAL

A/E INFO

APPROVED
FOR COMMANDER NAVFAC

ACTIVITY
HERM RAWLINGS

SATISFACTORY TO DATE MM/DD/YY
DES DAY DRW AK CHK TLD
PM/DM JTL/APK
BRANCH MANAGER TLD
CHIEF ENG/ARCH RLW
FIRE PROTECTION SLW DPS

DEPARTMENT OF THE NAVY
NAVAL FACILITIES ENGINEERING COMMAND
HAMPTON ROADS IPT
NAVAL FACILITIES ENGINEERING COMMAND
NORFOLK, VA
WALLOPS ISLAND, VA
SURFACE COMBAT SYSTEM CENTER
HOUSING WELCOME CENTER
PARTIAL BUILDING SECTION AND WALL SECTION

SCALE: AS NOTED
EPROJECT NO.: 1366574
CONSTR. CONTR. NO.
NAVFAC DRAWING NO.
12708213
SHEET 41 OF 70
A-302

DRAWFORM REVISION: 10 MARCH 2009

FILE NAME: P:\VA\Wallops Island\MILCON\2016_1366574_P238_DBB_HousingWelcomeCenter\B_Design\Drawings\Sheet Files\08_Architectural\H238-1366574-A-302.dwg LAYOUT NAME: A-302 PLOTTED: Monday, December 07, 2015 - 9:04am USER: allen.kline

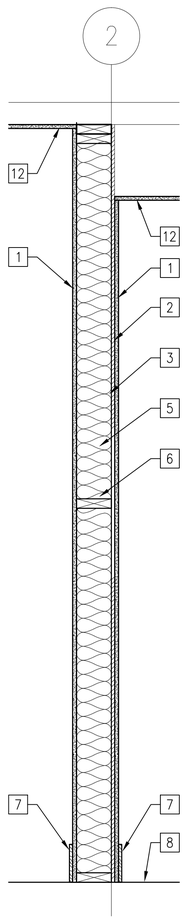

TYPE 1

SCALE: 1"=1'-0"

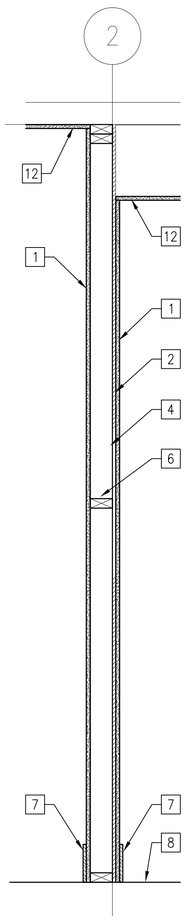

TYPE 2

SCALE: 1"=1'-0"

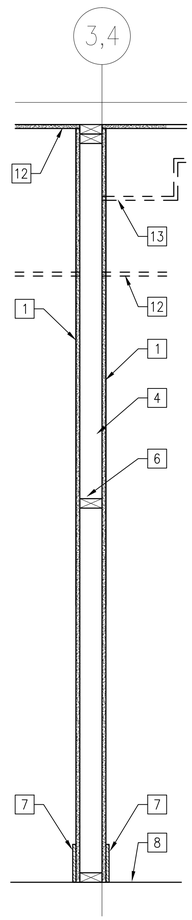

TYPE 3 / 3A

SCALE: 1"=1'-0"

*3A SUBSTITUTE 1/2" CEMENTITIOUS BACKER UNITS FOR 5/8" GYPSUM WALLBOARD AND ADD PORCELAIN TILE FULL HEIGHT AT RESTROOM SIDE.

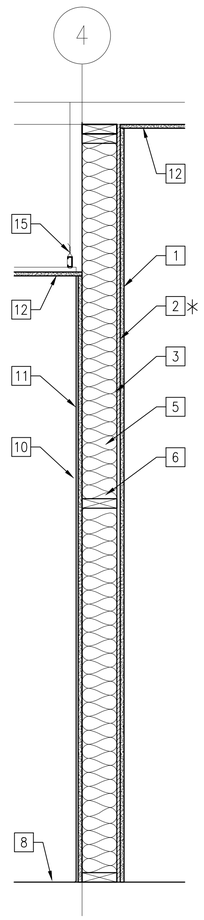

TYPE 4 / 4A

SCALE: 1"=1'-0"

*4A OMIT 1/2" PLYWOOD AT OFFICE

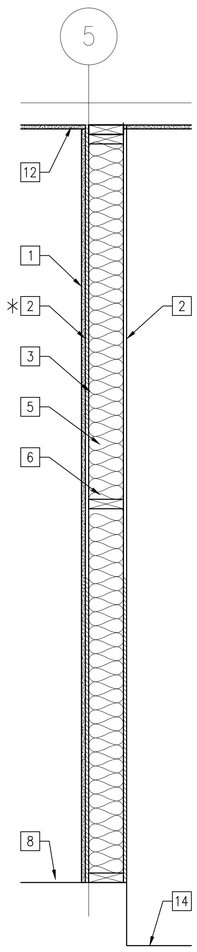

TYPE 5 / 5A

SCALE: 1"=1'-0"

*5A OMIT 1/2" PLYWOOD AT OFFICE

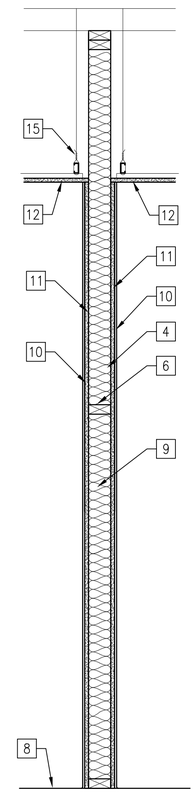

TYPE 6

SCALE: 1"=1'-0"

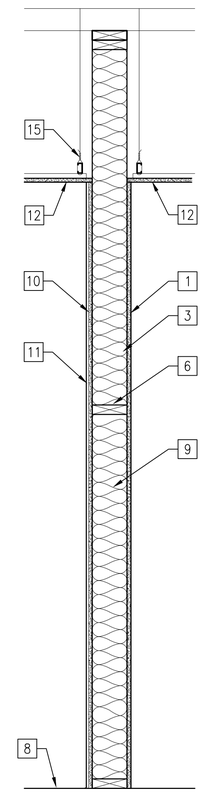

TYPE 7

SCALE: 1"=1'-0"

GENERAL SHEET NOTES

1. REFER TO SHT A-101 FOR LOCATIONS OF PARTITION TYPES.

NEW WORK KEYNOTES

1. 5/8" GYPSUM WALLBOARD.
2. 1/2" PLYWOOD OR OSB SHEATHING.
3. 2X6 STUD AT 16" O.C.
4. 2X4 STUD AT 16" O.C.
5. R-21 BATT INSULATION.
6. BLOCKING CONTINUOUS AS REQUIRED.
7. 1/2" X 6" MDO PAINTED BASE TRIM.
8. FLOOR FINISH, REFER TO ROOM FINISH SCHEDULE ON I-601.
9. SOUND ATTENUATION BATTS.
10. 1/2" CEMENTITIOUS BACKER UNITS.
11. PORCELAIN WALL TILE.
12. 5/8" GYPSUM WALLBOARD CEILING. REFER TO A-102 FOR CEILING ELEVATION.
13. GYPSUM WALLBOARD SOFFIT WHERE INDICATED.
14. DEPRESSED SLAB AT EXTERIOR STORAGE.
15. HANGER SUSPENSION SYSTEM.

GRAPHIC SCALE

1"=1'-0" 0' 1/2' 1' 2'

SYM	DESCRIPTION	DATE	APPR

NAVFAC

SEAL

A/E INFO

APPROVED

FOR COMMANDER NAVFAC

ACTIVITY: HERM RAWLINGS

SATISFACTORY TO DATE MM/DD/YY

DES DAY DFW AK CHK TLD

PM/DM JTL/APK

BRANCH MANAGER TLD

CHIEF ENG/ARCH RLW

FIRE PROTECTION DPS

DEPARTMENT OF THE NAVY
NAVAL FACILITIES ENGINEERING COMMAND
HAMPTON ROADS IPT
NAVAL FACILITIES ENGINEERING COMMAND NORFOLK, VA
SURFACE COMBAT SYSTEM CENTER WALLOPS ISLAND, VA

HOUSING WELCOME CENTER

INTERIOR PARTITION TYPES

SCALE: AS NOTED

EPROJECT NO.: 1366574

CONSTR. CONTR. NO.

NAVFAC DRAWING NO. 12708214

SHEET 42 OF 70

A-303

DRAWFORM REVISION: 10 MARCH 2009

FILE NAME: P:\VA\Wallops Island\MILCON\2016_1366574_P238_DRB_HousingWelcomeCenter\B_Design\Drawings\Sheet Files\08_Architectural\H238-1366574-A-303.dwg LAYOUT NAME: A-303 PLOTTED: Monday, December 07, 2015 - 9:06am USER: allen.kline

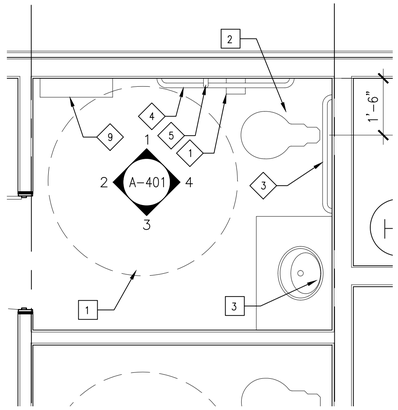

A ENLARGED TOILET PLAN (TYP)
SCALE: 1/2"=1'-0" A-101

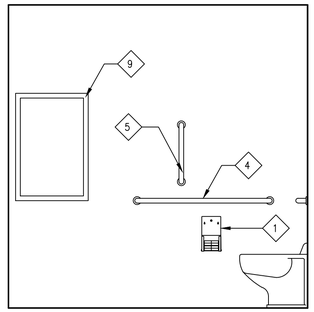

1 TOILET ELEVATION
SCALE: 1/2"=1'-0" A-401

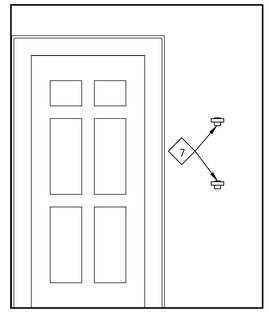

2 TOILET ELEVATION
SCALE: 1/2"=1'-0" A-401

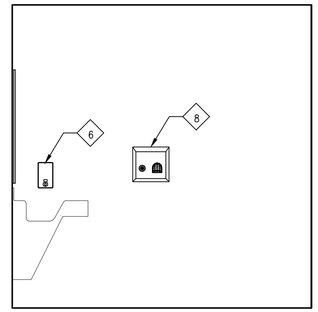

3 TOILET ELEVATION
SCALE: 1/2"=1'-0" A-401

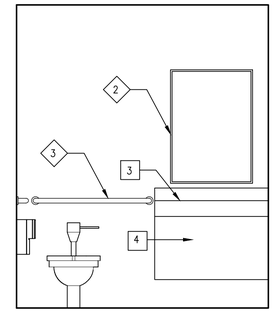

4 TOILET ELEVATION
SCALE: 1/2"=1'-0" A-401

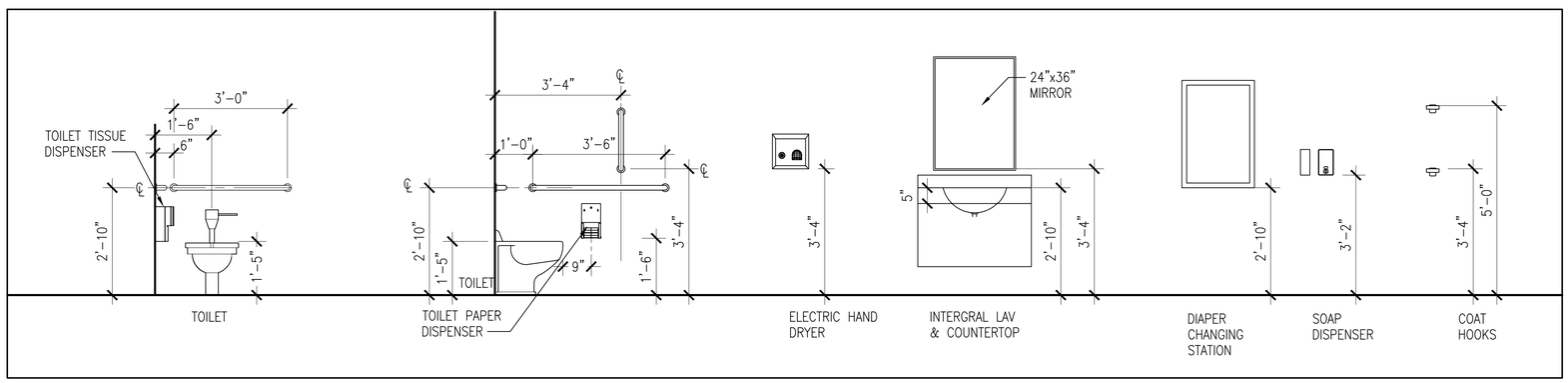

B FIXTURE MOUNTING HEIGHTS
SCALE: 1/2"=1'-0"

TOILET ACCESSORIES LEGEND

MK	DESCRIPTION
1	TOILET TISSUE DISPENSER
2	24" X 36" MIRROR, GLASS
3	ACCESSIBLE GRAB BAR – 36"
4	ACCESSIBLE GRAB BAR – 42"
5	ACCESSIBLE GRAB BAR – 18"
6	SOAP DISPENSER
7	COAT HOOK
8	ELECTRIC HAND DRYER
9	DIAPER CHANGING STATION – VERTICAL

GENERAL SHEET NOTES

1. SEE SHEET I-401 FOR FINISH ELEVATIONS.
2. PROVIDE BACKING AS REQUIRED TO SUPPORT AND MOUNT WALL ATTACHED FIXTURES/ACCESSORIES PER MANUFACTURERS RECOMMENDATIONS.

NEW WORK KEYNOTES

1. MAINTAIN 60" DIAMETER ACCESSIBLE FLOOR CLEARANCE.
2. TOILET – SEE PLUMBING SCHEDULE.
3. SOLID SURFACE TOP WITH INTEGRAL SINK. SEE FINISH SCHEDULE.
4. PLASTIC LAMINATE COUNTER SUPPORT AND APRON. SEE SECTION A SHEET A-602.

GRAPHIC SCALE

1/2" = 1'-0" 0 1/2" 1" 2"

SYM	DESCRIPTION	DATE	APPR

NAVFAC

SEAL

A/E INFO.

APPROVED

FOR COMMANDER NAVFAC

ACTIVITY
HERM RAWLINGS

SATISFACTORY TO DATE MM/DD/YY

DES DAY DRW CBM CHK TLD
PM/DM JTL/APK
BRANCH MANAGER TLD
CHIEF ENG/ARCH RLW
FIRE PROTECTION SLW DPS

DEPARTMENT OF THE NAVY
NAVAL FACILITIES ENGINEERING COMMAND
NAVAL FACILITIES ENGINEERING COMMAND NORFOLK, VA
HAMPTON ROADS IPT
SURFACE COMBAT SYSTEM CENTER WALLOPS ISLAND, VA
HOUSING WELCOME CENTER
TOILET ROOM ELEVATIONS

SCALE: AS NOTED
EPROJECT NO.: 1366574
CONSTR. CONTR. NO.
NAVFAC DRAWING NO.
12708215
SHEET 43 OF 70

A-401

DRAWFORM REVISION: 10 MARCH 2009

FILE NAME: P:\VA\Wallops Island\MILCON\2016_1366574_P238_DBB_HousingWelcomeCenter\B_Design\Drawings\Sheet Files\D8_Architectural\W238-1366574-A-401.dwg LAYOUT NAME: A-401 PLOTTED: Monday, December 07, 2015 - 9:07am USER: allen.kline

DOOR SCHEDULE

(SEE SPECIFICATIONS SECTION 08710 FOR HARDWARE SCHEDULE)

DOOR NO	DOOR SIZE W X H X THK	DOOR TYPE	DOOR MATERIAL	HEAD DETAIL	JAMB DETAIL	SILL DETAIL	REMARKS
1	3'–0" X 8'–9" X 1 3/4"	1	WOOD/GLASS	H–1	J–1, 2	S–1	
2	3'–0" X 7'–0" X 1 3/4"	5	INSUL/MTL	H–2	J–3, 4	S–2	1
3	3'–0" X 7'–0" X 1 3/4"	5	INSUL/MTL	H–2	J–3, 4	S–2	
4	3'–0" X 7'–0" X 1 3/4"	5	INSUL/MTL	H–2	J–3, 4	S–2	
5	2–3'–0" X 7'–0" X 1 3/4"	4	INSUL/MTL	H–2	J–3, 4	S–2	
6	3'–0" X 6'–8" X 1 3/8"	3	SCWD	H–3	J–5	S–3	
7	3'–0" X 6'–8" X 1 3/8"	3	SCWD	H–3	J–5	S–3	
8	3'–0" X 6'–8" X 1 3/8"	3	SCWD	H–3	J–5	S–3	
9	3'–0" X 6'–8" X 1 3/8"	3	SCWD	H–3	J–5	S–4	
10	3'–0" X 6'–8" X 1 3/8"	3	SCWD	H–3	J–5	S–4	
11	3'–0" X 6'–8" X 1 3/8"	2	SCWD	H–3	J–5	S–3	

NOTE:

1. OMIT EXTERIOR DOOR HARDWARE.

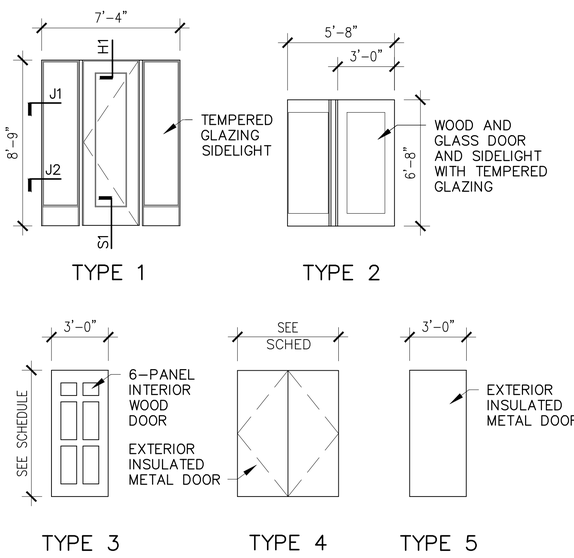

DOOR TYPES

SCALE: 1/4" = 1'–0"

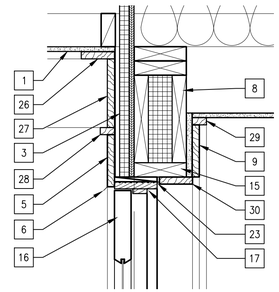

H1 HEAD

SCALE: 1 1/2" = 1'–0" A–601

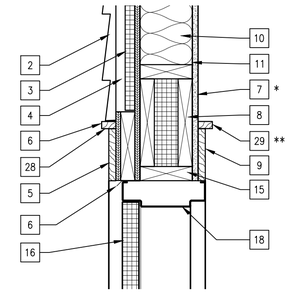

H2 HEAD

SCALE: 1 1/2" = 1'–0" A–601

* PLYWOOD AT DOOR 5
** OMIT AT DOORS 4 AND 5

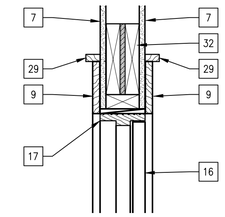

H3 HEAD

SCALE: 1 1/2" = 1'–0" A–601

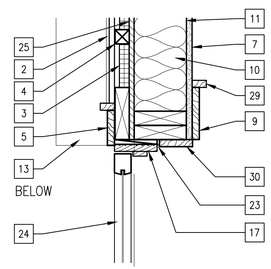

J1 JAMB (UPPER)

SCALE: 1 1/2" = 1'–0" A–601

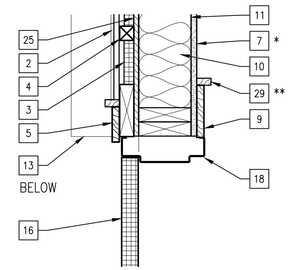

J3 JAMB (UPPER)

SCALE: 1 1/2" = 1'–0" A–601

* PLYWOOD AT DOOR 5
** OMIT AT DOORS 4 AND 5

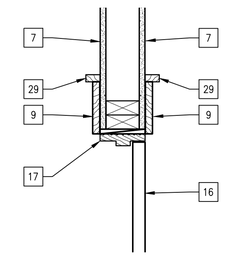

J5 JAMB

SCALE: 1 1/2" = 1'–0" A–601

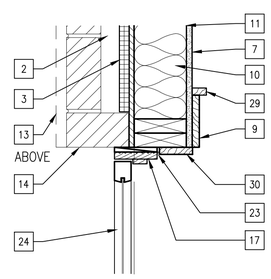

J2 JAMB (LOWER)

SCALE: 1 1/2" = 1'–0" A–601

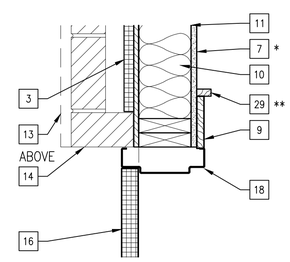

J4 JAMB (LOWER)

SCALE: 1 1/2" = 1'–0" A–601

* PLYWOOD AT DOOR 5
** OMIT AT DOORS 4 AND 5

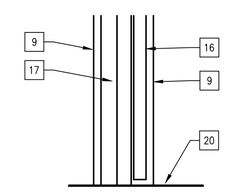

S3 SILL

SCALE: 1 1/2" = 1'–0" A–601

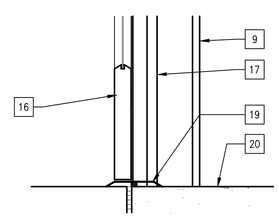

S1 SILL

SCALE: 1 1/2" = 1'–0" A–601

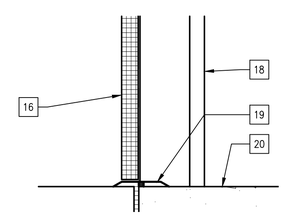

S2 SILL

SCALE: 1 1/2" = 1'–0" A–601

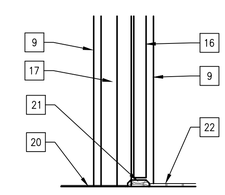

S4 SILL

SCALE: 1 1/2" = 1'–0" A–601

GENERAL SHEET NOTES

1. COORDINATE AND VERIFY FRAMING OPENINGS PRIOR TO ORDERING DOORS.
2. EXTERIOR TRIM SHALL BE CEDAR.
3. INTERIOR TRIM SHALL BE MDO.
4. NAIL CEMENTITOUS SIDING TO 2 X 2 FURRING. LOCATE AND FASTEN FURRING TO SHEATHING MIDWAY BETWEEN STUDS.

NEW WORK KEYNOTES

1. CEMENTITIOUS SOFFIT.
2. CEMENTITIOUS SIDING.
3. 1" RIGID INSULATION.
4. 2X2 WOOD FURRING (VERTICAL) AT 16"O.C. ATTACHED BETWEEN STUDS.
5. 1" X 5 1/2" CEDAR TRIM.
6. METAL THRU–WALL FLASHING.
7. 5/8" GYPSUM WALLBOARD.
8. DOUBLE 2 X 10 LINTEL WITH RIGID INSULATION SPACER.
9. 3/4" X 5 1/2" MDO TRIM.
10. R–21 BATT INSULATION.
11. MOISTURE BARRIER.
12. NOT USED.
13. PRECAST SILL.
14. MASONRY VENEER.
15. 2X6 PLATE TOP AND BOTTOM.
16. DOOR, REFER TO DOOR SCHEDULE.
17. WOOD DOOR FRAME.
18. METAL DOOR FRAME.
19. METAL SADDLE WITH THERMAL BREAK.
20. FLOOR FINISH. REFER TO ROOM FINISH SCHEDULE ON I–601.
21. MARBLE THRESHOLD 1/2" MAX HEIGHT PER ADA.
22. PORCELAIN TILE.
23. SEALANT CONTINUOUS.
24. SIDE LITE.
25. VAPOR RETARDER OVER SHEATHING.
26. 3/4" X 3 1/2" CEDAR TRIM.
27. 3/4" X 7 1/4" CEDAR TRIM.
28. 3/4" x 1 1/2" CEDAR TRIM.
29. 3/4" X 1 1/2" MDO TRIM.
30. 3/4" X 3 1/2" MDO TRIM.
31. NOT USED.
32. 2X8 LINTEL WITH PLYWOOD SPACER.
33. RAIN DRIP.

GRAPHIC SCALE

1/4"=1'–0" 0' 2' 4' 8'

1–1/2"=1'–0" 0 6" 1' 1'–6"

SYM	DESCRIPTION	DATE	APPR

NAVFAC

SEAL

A/E INFO

APPROVED

FOR COMMANDER NAVFAC

ACTIVITY: HERM RAWLINGS

SATISFACTORY TO DATE MM/DD/YY

DES DAY DRW AK CHK TLD

PM/DM JTL/APK

BRANCH MANAGER TLD

CHIEF ENG/ARCH RLW

FIRE PROTECTION DPS

DEPARTMENT OF THE NAVY
NAVAL FACILITIES ENGINEERING COMMAND
HAMPTON ROADS IPT
NAVAL FACILITIES ENGINEERING COMMAND NORFOLK, VA
SURFACE COMBAT SYSTEM CENTER WALLOPS ISLAND, VA
HOUSING WELCOME CENTER
DOOR SCHEDULE, TYPES AND DETAILS

SCALE: AS NOTED

EPROJECT NO.: 1366574

CONSTR. CONTR. NO.

NAVFAC DRAWING NO. 12708216

SHEET 44 OF 70

A-601

DRAWFORM REVISION: 10 MARCH 2009

FILE NAME: P:\VA\Wallops Island\MILCON\2016_1366574_P238_DBB_HousingWelcomeCenter\B_Design\Drawings\Sheet Files\08_Architecture\H238-1366574-A-601.dwg LAYOUT NAME: A-601 PLOTTED: Monday, December 07, 2015 - 9:08am USER: allen.kline

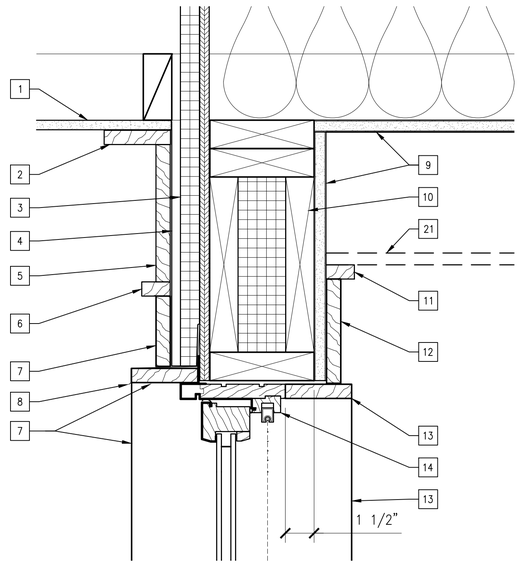

H1 HEAD
SCALE: 3" = 1'-0" A-601

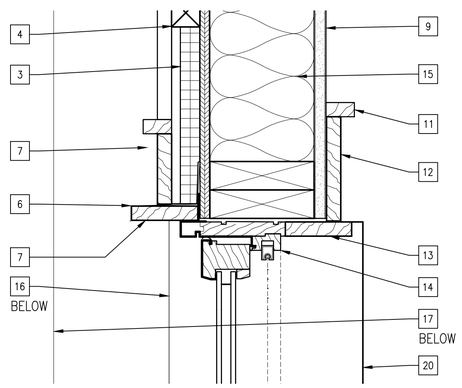

J1 JAMB
SCALE: 3" = 1'-0" A-601

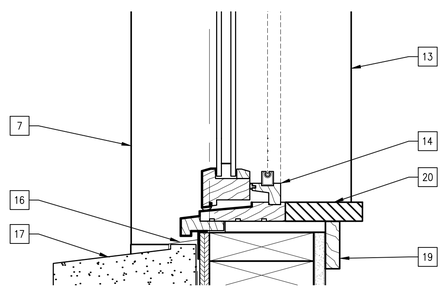

S1 SILL
SCALE: 3" = 1'-0" A-601

WINDOW SCHEDULE

MARK	UNIT DESIGNATION	UNIT SIZE W x H	ROUGH OPENING W x H	MARK
A	P3050	2'-11 15/16" x 4'-11 7/8"	3'-0 1/2" x 5'-0 3/8"	FIXED
B	C15 (PAIR)	2'-0 1/8" x 4'-11 7/8"	2'-0 5/8" x 5'-0 3/8"	OPERABLE
	P4050	4'-0" x 4'-11 7/8"	4'-0 1/2" x 5'-0 3/8"	FIXED

NOTE: WINDOW UNIT DESIGNATIONS SELECTED FROM ANDERSEN CORP. 400 SERIES. OTHER MANUFACTURERS' PRODUCTS MAY BE SUBMITTED FOR APPROVAL PROVIDED THEY CLOSELY APPROXIMATE COLOR, SIZE AND STYLE AND CONFORM TO ALL OTHER REQUIREMENTS SPECIFIED.

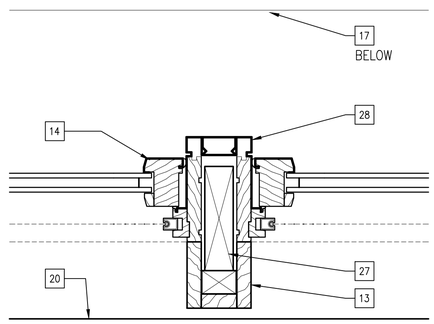

M1 MULLION
SCALE: 3" = 1'-0" A-601

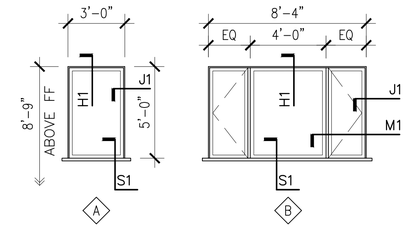

WINDOW TYPES
SCALE: 1/4" = 1'-0"

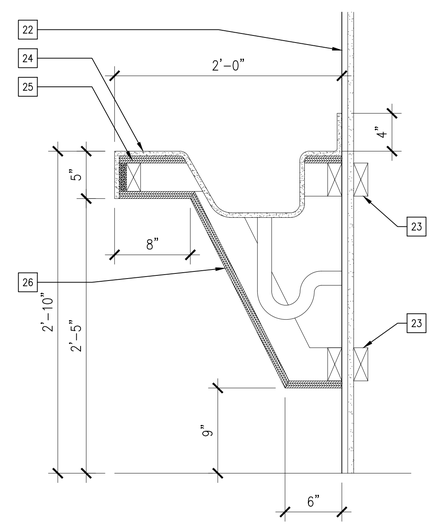

A VANITY SECTION
SCALE: 1 1/2" = 1'-0" A-101

GENERAL SHEET NOTES

1. COORDINATE AND VERIFY FRAMING OPENINGS PRIOR TO ORDERING WINDOWS.
2. EXTERIOR TRIM SHALL BE CEDAR.
3. INTERIOR TRIM SHALL BE MDO.

NEW WORK KEYNOTES

1. CEMENTITIOUS SOFFIT.
2. 3/4" X 3 1/2" CEDAR TRIM.
3. 1" RIGID INSULATION.
4. 2 X 2 FURRING (VERTICAL).
5. 3/4" X 7 1/4" CEDAR TRIM.
6. 3/4" X 1 1/2" CEDAR TRIM.
7. 3/4" X 3 3/4" CEDAR TRIM.
8. METAL THRU-WALL FLASHING.
9. 5/8" GYPSUM WALLBOARD.
10. DOUBLE 2 X 10 LINTEL WITH RIGID INSULATION SPACER.
11. 3/4" X 1 1/2" MDO TRIM.
12. 3/4" X 5 1/2" MDO TRIM.
13. 3/4" X 3 1/2" MDO TRIM.
14. VINYL-CLAD WOOD WINDOW WITH INSULATED GLAZING AND INSECT SCREEN.
15. R-21 BATT INSULATION.
16. SILL FLASHING.
17. PRECAST SILL. REFER TO DETAIL 2/A302.
18. 3/4" X 2 1/2" CEDAR TRIM.
19. 3/4" X 2 1/2" MDO APRON.
20. 1" X 4" MDO STOOL.
21. GYPSUM WALLBOARD CEILING WHERE INDICATED. REFER TO SHT A-102.
22. PORCELAIN WALL TILE.
23. CONTINUOUS BLOCKING AS REQUIRED.
24. SOLID SURFACE COUNTERTOP, BACKSPLASH AND INTEGRAL SINK.
25. 3/4" PLYWOOD SUBSTRATE.
26. REMOVABLE PANEL.
27. TREATED WOOD BLOCKING AS REQUIRED.
28. TRIM BY WINDOW MANUFACTURER.

GRAPHIC SCALE

1/4"=1'-0" 0' 2' 4' 8'
1-1/2"=1'-0" 0 6" 1' 1'-6"
3"=1'-0" 0 3" 6" 9"

SYM	DESCRIPTION	DATE	APPR

NAVFAC

SEAL

A/E INFO.

APPROVED

FOR COMMANDER NAVFAC

ACTIVITY
HERM RAWLINGS

SATISFACTORY TO DATE MM/DD/YY
DES DAY DRW AK CHK TLD
PM/DM JTL/APK
BRANCH MANAGER TLD
CHIEF ENG/ARCH RLW
FIRE PROTECTION SLW DPS

DEPARTMENT OF THE NAVY
NAVAL FACILITIES ENGINEERING COMMAND
HAMPTON ROADS IPT
NAVAL FACILITIES ENGINEERING COMMAND
NORFOLK, VA
SURFACE COMBAT SYSTEM CENTER
WALLOPS ISLAND, VA
HOUSING WELCOME CENTER
WINDOW SCHEDULE, TYPES, WINDOW AND MISCELLANEOUS DETAILS

SCALE: AS NOTED
EPROJECT NO.: 1366574
CONSTR. CONTR. NO.
NAVFAC DRAWING NO.
12708217
SHEET 45 OF 70
A-602

DRAWFORM REVISION: 10 MARCH 2009

FILE NAME: P:\VA\Wallops Island\MILCON\2016_1366574_P238_DBB_HousingWelcomeCenter\B_Design\Drawings\Sheet Files\08_Architectural\H238-1366574-A-602.dwg LAYOUT NAME: A-602 PLOTTED: Monday, December 07, 2015 - 9:09am USER: allen.kline

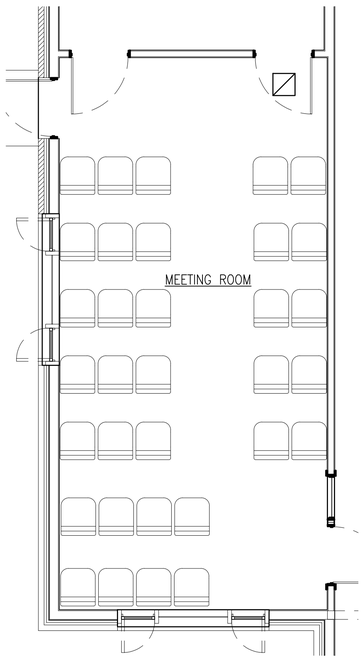

ALTERNATE FURNITURE PLAN
MEETING ROOM

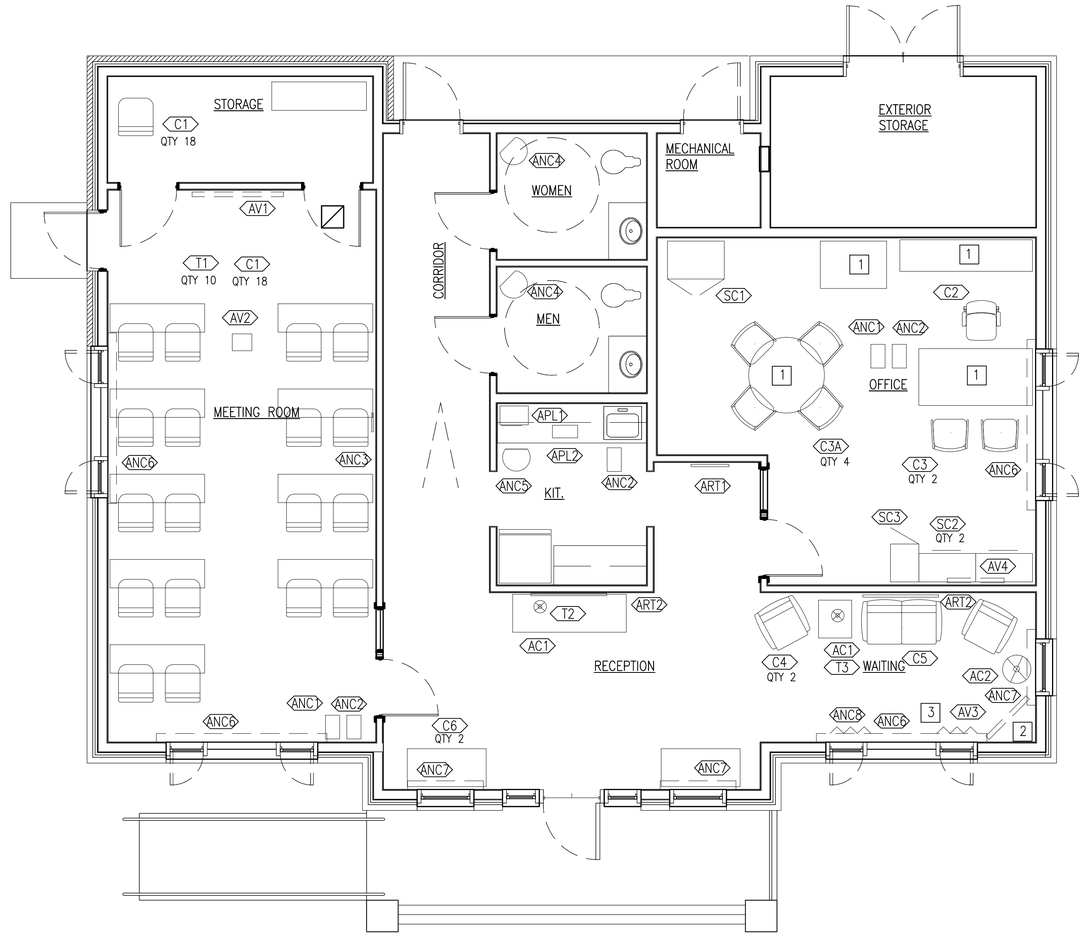

1 FURNITURE PLAN
SCALE: 1/4" = 1'-0"

A/V SCHEDULE

MARK	NAME	NOTES
AV1	PROJ SCREEN	WALL HUNG
AV2	PROJECTOR	CEIL MOUNT
AV3	FLAT SCREEN	CEIL HUNG
AV4	FLAT SCREEN	WALL MOUNT

PLAN NORTH

GENERAL SHEET NOTES

1. FURNITURE (FF&E AND A/V) SHOWN IS NOT PART OF CONSTRUCTION AND SHALL BE FUNDED SEPARATELY AND PROCURED VIA A PLANNED MOD TO THE CONSTRUCTION CONTRACT. SEE SPEC SECTION 01 30 01.00 22 – DEIGN, PROCUREMENT, AND INSTALLATION OF FURNITURE, FIXTUES, AND EQUIPMENT.

NEW WORK KEYNOTES

1. FURNITURE TO BE RELOCATED FROM EXISTING HOUSING OFFICE BY GOVERNMENT.
2. FLAT SCREEN TELEVISION TO BE CEILING HUNG.
3. CORNICE BOARDS TO BE INSTALLED ON ALL WINDOWS; DRAPERY PANELS TO BE INSTALLED ON 8'–0" WINDOW IN WAITING AREA ONLY.
4. MATCH FINISH ON NEW FURNITURE AS CLOSE AS POSSIBLE TO EXISTING FURNTURE BEING RE–USED.

FF&E SCHEDULE

MARK	NAME	NOTES
AC1	ACCESSORY	TABLE LAMP
AC2	ACCESSORY	FLOOR LAMP
ANC1	TRASH	DESK SIDE
ANC2	RECYCLE	DESK SIDE
ANC3	CLOCK	--
ANC4	TRASH	TOILETS
ANC5	TRASH	KITCHEN
ANC6	CORNICE	8' WINDOW
ANC7	CORNICE	3' WINDOW
ANC8	DRAPERY	--
APL1	MICROWAVE	--
APL2	COFFEE	POUR OVER
ART1	ARTWORK	MID SCALE
ART2	ARTWORK	LG SCALE
C1	STACK CHAIR	POLY
C2	TASK CHAIR	--
C3	SIDE CHAIR	--
C3A	SIDE CHAIR	ARMLESS
C4	CHAIR	LOUNGE
C5	SOFA	--
C6	BENCH	--
SC1	STORAGE CAB	36"
SC2	36" FILE CAB	3 DRAWER
SC3	WARDROBE	18"
T1	TABLE	18" X 60"
T2	TABLE	DISPLAY
T3	TABLE	SIDE

GRAPHIC SCALE

1/4" = 1'-0" 0 1/2" 1" 2"

SYM	DESCRIPTION	DATE	APPR

NAVFAC

SEAL

A/E INFO

APPROVED

FOR COMMANDER NAVFAC

ACTIVITY
HERM RAWLINGS

SATISFACTORY TO DATE MM/DD/YY

DES ??? DRW ??? CHK ???

PM/DM JTL/APK

BRANCH MANAGER TLD

CHIEF ENG/ARCH RLW

FIRE PROTECTION SCW DPS

DEPARTMENT OF THE NAVY
NAVAL FACILITIES ENGINEERING COMMAND
HAMPTON ROADS IPT
NAVAL FACILITIES ENGINEERING COMMAND
NORFOLK, VA
SURFACE COMBAT SYSTEM CENTER
WALLOPS ISLAND, VA
HOUSING WELCOME CENTER
FURNITURE PLAN

SCALE: AS NOTED

EPROJECT NO.: 1366574

CONSTR. CONTR. NO.

NAVFAC DRAWING NO.
12708218

SHEET 46 OF 70

I-101

DRAWFORM REVISION: 10 MARCH 2009

FILE NAME: P:\VA\Wallops Island\WLCON\2016_1366574_P238_DBB_HousingWelcomeCenter\B_Design\Drawings\Sheet Files\09_Interiors\I-101.dwg LAYOUT NAME: I-101 PLOTTED: Wednesday, December 02, 2015 – 5:36pm USER: donna.presnell

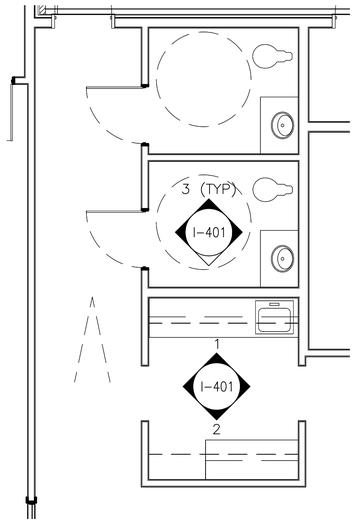

TOILET/KITCHEN PLAN

SCALE: 1/4" = 1'-0"

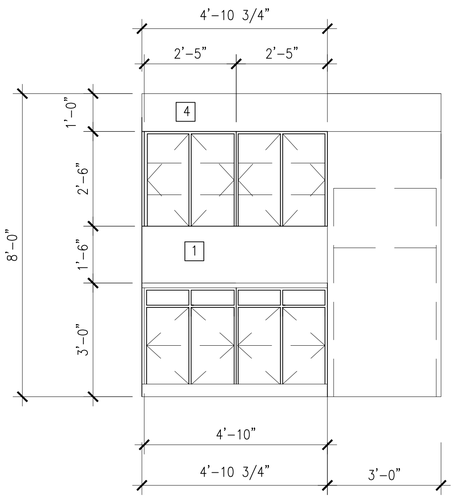

1 CABINET ELEVATION

SCALE: 1/2" = 1'-0"

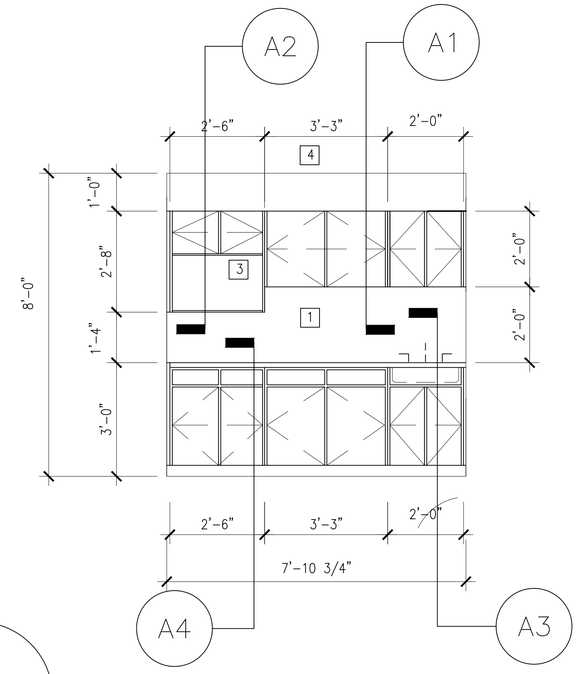

2 CABINET ELEVATION

SCALE: 1/2" = 1'-0"

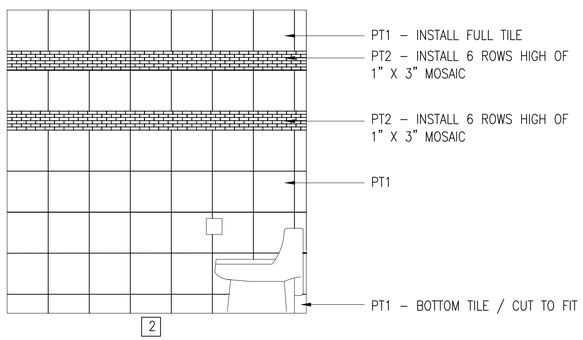

3 ELEVATION -TILE PATTERN (TYP)

SCALE: 1/2" = 1'-0"

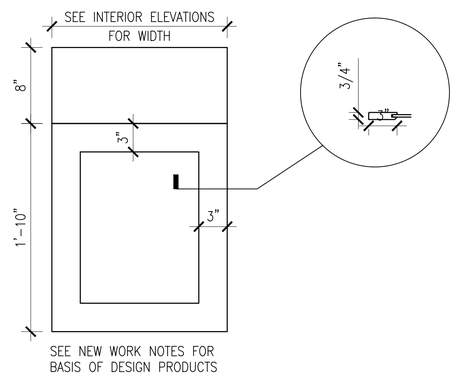

4 CABINET DOOR ELEVATION

SCALE: 1/2" = 1'-0"

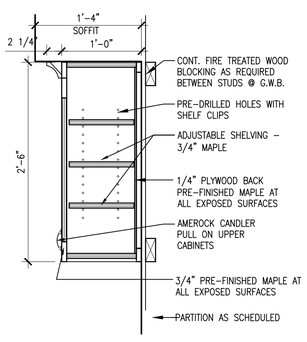

A1 WALL CABINET

SCALE: 1"=1'-0"

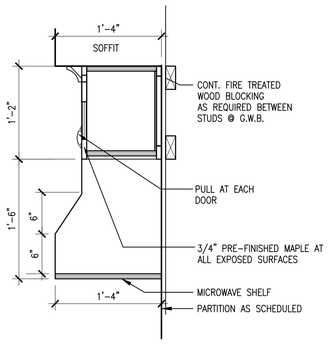

A2 MICROWAVE CABINET

SCALE: 1"=1'-0"

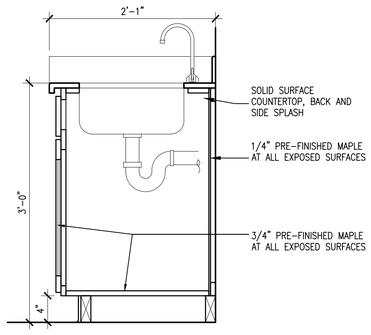

A3 SINK BASE

SCALE: 1"=1'-0"

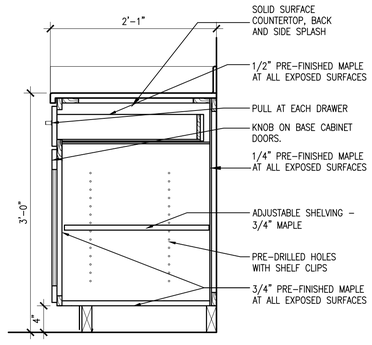

A4 BASE CABINET

SCALE: 1"=1'-0"

GENERAL SHEET NOTES

1. DIMENSIONS ARE SHOWN TO FACE OF FINISH AND ARE APPROXIMATE. FIELD VERIFY PRIOR TO CONSTRUCTION.
2. REFERENCE I-601 FOR INTERIOR FINISH LEGEND.

NEW WORK KEYNOTES

1. FULL HEIGHT BACK AND END SPLASHES.
2. INSTALL WALL TILE FLUSH WITH FLOOR TILE; ALIGN JOINTS BETWEEN FLOOR AND WALL.
3. MICROWAVE CABINET.
4. SOFFIT ABAOVE.

NEW WORK NOTES

1. BASIS OF DESIGN FOR KITCHEN CABINETS:
   MFR: SHILHOH CABINETRY
   DOOR STYLE: LANCASTER / SHAKER WITH SLAB DRAWER
   CONSTRUCTION: FULL OVERLAY
   COLOR: SILAS WITH HIGHLIGHT GRAPHITE
   WOOD SPECIES: MAPLE
2. BASIS OF DESIGN FOR CABINETRY HARDWARE:
   MFR: AMEROCK
   COLLECTION: CANDLER
   TYPE: PULL
   SIZE: 3"
   MODEL: BP29349G10
   FINISH: SATIN NICKEL
   NOTE: USE ON ALL DOORS AND DRAWERS

PLAN NORTH

GRAPHIC SCALE

1/2" = 1'-0" 0 1/2" 1" 2"

1" = 1'-0" 0 1/2" 1" 2"

SYM	DESCRIPTION	DATE	APPR

NAVFAC

SEAL

A/E INFO

APPROVED

FOR COMMANDER NAVFAC

ACTIVITY: HERM RAWLINGS

SATISFACTORY TO DATE MM/DD/YY

DES: ??? DRW: ??? CHK: ???

PM/DM: JTL/APK

BRANCH MANAGER: TLD

CHIEF ENG/ARCH: RLW

FIRE PROTECTION: DPS

DEPARTMENT OF THE NAVY
NAVAL FACILITIES ENGINEERING COMMAND
HAMPTON ROADS IPT
NAVAL FACILITIES ENGINEERING COMMAND NORFOLK, VA
SURFACE COMBAT SYSTEM CENTER WALLOPS ISLAND, VA
HOUSING WELCOME CENTER
INTERIOR ELEVATIONS

SCALE: AS NOTED

EPROJECT NO.: 1366574

CONSTR. CONTR. NO.

NAVFAC DRAWING NO. 12708219

SHEET 47 OF 70

I-401

DRAWFORM REVISION: 10 MARCH 2009

FILE NAME: P:\VA\Wallops Island\MILCON\2016_1366574_P238_DBB_HousingWelcomeCenter\B_Design\Drawings\Sheet Files\09_Interiors\H238-1366574-I-401.dwg LAYOUT NAME: I-401 PLOTTED: Wednesday, December 02, 2015 - 5:36pm USER: donna.presnell

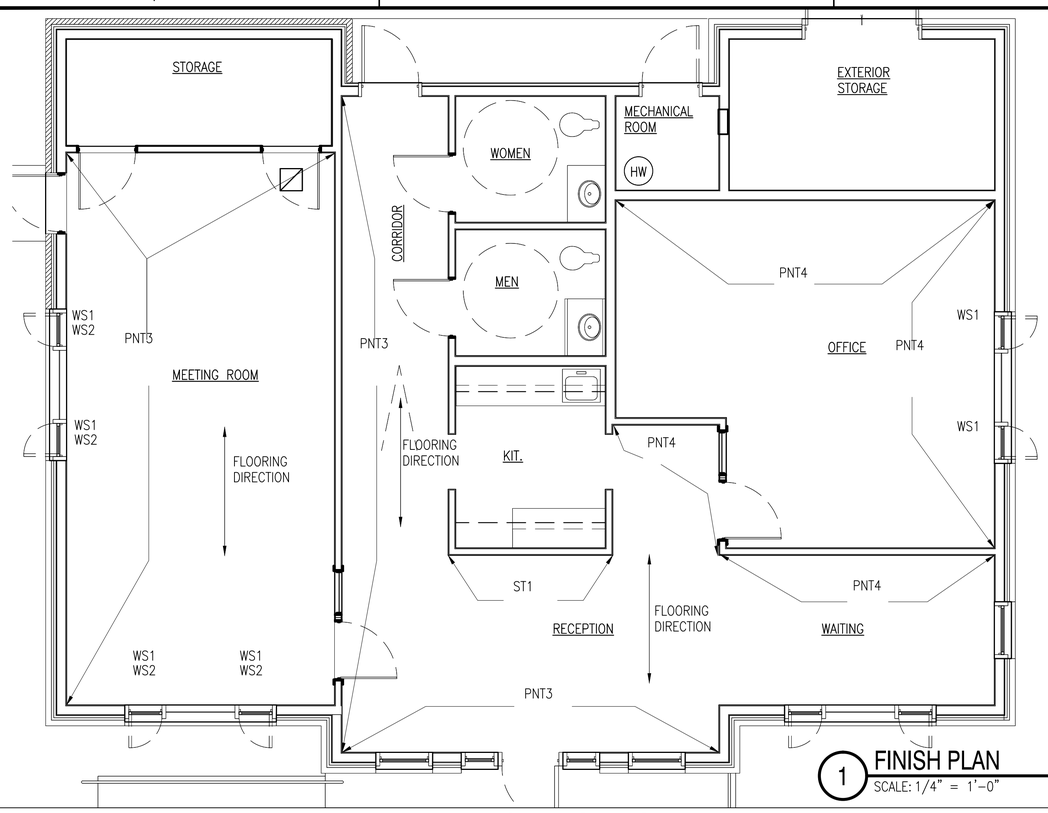

1 FINISH PLAN
SCALE: 1/4" = 1'-0"

INTERIOR FINISH ABBREVIATIONS

CPT –	CARPET
GT –	GROUT
GWB –	GYPSUM WALLBOARD
PNT –	PAINT
PT –	PORCELAIN TILE
SC –	SEALED CONCRETE
ST –	NATURAL STONE
SS –	SOLID SURFACE
WD –	WOOD FLOOR
WS –	WINDOW SHADE
* –	INDICATES ADDITIONAL INFORMATION

NEW WORK NOTES

1. FINISHES INDICATED ARE THE APPROVED BASIS OF DESIGN TO CONVEY COLOR, PATTERN, TEXTURE, AND SALIENT CHARACTERISTICS ONLY. THE LISTING OF MANUFACTURER INFORMATION IS NOT INTENDED TO LIMIT THE SELECTION OF PRODUCTS PROVIDED BY OTHER MANUFACTURERS. PRODUCT SUBSTITUTIONS MEETING THESE CRITERIA WILL BE CONSIDERED AND MUST BE REVIEWED BY THE INTERIOR DESIGNER OF RECORD (IDOR) AND THE NAVFAC INTERIOR DESIGNER AND APPROVED BY THE CONTRACTING OFFICER.
2. NO FINISH MATERIALS SHALL BE SUBSTITUTED DUE TO ORDERING LEAD TIMES. IT IS THE CONTRACTOR'S RESPONSIBILITY TO ORDER ALL MATERIALS IN A TIMELY FASHION TO AVOID DELAYS.
3. PROVIDE CLEAR CORNER GUARDS ON ALL OUTSIDE CORNERS EXCEPT WHERE ST–1 OCCURS. CORNER GUARDS SHALL SPAN FULL HEIGHT FROM BASE TO CEILING. BASIS OF DESIGN: KOROGUARD LEXAN.
4. ALL GYPSUM BOARD SURFACES (WALLS & CEILINGS) TO BE FINISHED WITH A LEVEL 5 FINISH.
5. ALL SURFACE PREPARATION AND CLEANING PROCEDURES SHALL BE IN STRICT ACCORDANCE WITH THE INSTRUCTIONS AND SPECIFICATIONS OF THE PAINT MANUFACTURER WHOSE PRODUCTS ARE BEING USED.
6. FOR DARKER/SATURATED PAINT COLORS, FOLLOW MANUFACTURERS RECOMMENDATION FOR PROPER APPLICATION AND COVERAGE.
7. ACCESS PANELS SHALL BE SPRAY PAINTED TO MATCH THE ADJACENT WALL COLOR. PANELS PAINTED BY BRUSH ARE NOT ACCEPTABLE.
8. PAINT SHEENS: CEILINGS SHALL BE FLAT, SOFFITS, AND WALLS IN ALL ROOMS SHALL BE EGGSHELL, METAL AND WOOD DOORS AND ALL INTERIOR TRIM SHALL BE SEMI–GLOSS.
9. ALL TRANSITIONS OCCURRING UNDER DOORS SHALL BE CENTERED UNDER DOOR.
10. ALL TRANSITIONS SHALL MEET ABA REQUIREMENTS.
11. PROVIDE BLOCKING AS REQUIRED AT ALL EQUIPMENT AND ACCESSORY LOCATIONS, INCLUDING THOSE LISTED AS FF&E.
13. WHERE WS–1 AND WS–2 ARE INDICATED, A DOUBLE ROLLER SHADE SHALL BE INSTALLED.
14. PAINT ALL WOOD DOORS, DOOR TRIM, WINDOW TRIM AND WOOD BASE PPG 1024–6 PATCHES.
15. FINAL GROUT COLOR TO BE SELECTED FROM FULL LINE OF MANUFACTURER'S OFFERINGS FOR GROUT TYPE PROVIDED.
16. TRIM OUT EXPOSED ENDS OF ST–1 AT WALL EDGES USING WOOD TRIM. TRIM TO MATCH VERTICAL MEMBER OF WOOD TRIM STYLE USED AT DOOR CASINGS. STAIN TO MATCH.

INTERIOR FINISH LEGEND

TAG	MATERIAL	SIZE	MANUFACTURER	STYLE– TYPE	COLOR	FINISH	INSTALLATION	REMARKS/LOCATION
CPT1	CARPET TILE	24" X 24"	BOYLU	SAWGRASS	SWG12 WINTER'S LACE	--	MONOLITHIC	WITH ILOC ES CUSHION RE
PL1	PLASTIC LAMINATE		WILSONART	7960K–18	STUDIO TEAK	LINEARITY WITH AEON	--	SINK APRONS UNDER BATHROOM LAVATORIES
PNT1	PAINT		PPG	1006–1	GYPSUM	FLAT	--	CEILING PAINT
PNT 2	PAINT		PPG	1098–3	SAND FOSSIL	EGGSHELL	--	GENERAL WALL PAINT
PNT 3	PAINT		PPG	1086–5	EARTHY OCHER	EGGSHELL	--	ACCENT PAINT
PNT 4	PAINT		PPG	10–19	FAVORITE FLANNEL	EGGGHSELL	--	ACCENT PAINT
PNT 5	PAINT		PPG	1024–6	PATCHES	FLAT	--	DOOR/TRIM PAINT; ACCENT CEILING PAINT
PT1	PORCELAIN TILE	13" X 13"	TRINITY TILE	PURE	JOY	--	SEE ELEVATION	FLOOR TILE / FIELD WALL TILE /RESTROOM
PT2	PORCELAIN TILE	13"X13" 1X3 BRICK MOSAIC	TRINITY TILE	PURE	LIFE	--	SEE ELEVATION	WALL TILE/ACCENT/RESTROOM
SC	SEALED CONCRETE	--	---	NATURAL COLOR		SMOOTH FINISH		BACK OF HOUSE SPACES
ST1	MANUFACTURED STONE	--	ELDORADO STONE	STACKED STONE	NANTUCKET	--	FULL WALL	*SEE NEW WORK NOTE #16 FOR EDGE FINISH TREATMENT
SS1	SOLID SURFACE	--	ZODIAQ	QUARTZ	SAVORY	--	--	KITCHEN/COUNTERTOP/FULL HEIGHT BACKSPLASH
SS2	SOLID SURFACE	--	AVONITE	F1–7501	MOON CRYSTAL	SATIN	--	BATHROOM COUNTERS
SS3	SOLID SURFACE		AVONITE	F1–8106	IVORY	SATIN	INTEGRAL	LAV WITH COUNTER SS2; BOWL STYLE VS–1815
WD1	STRANDED BAMBOO	5" X 72"	PLYBOO	STILETTO FL–P5872CV/CL–NAUF/FSC	CANVAS	--	SEE FINISH PLAN	---
WS1	WINDOW SHADE		MECHOSYSTEMS	EUROTWILL	6004 SAND	LIGHT FILTERING	--	MANUAL OPERATION
WS2	WINDOW SHADE		MECHOSYSTEMS	MIDNITE	0208 NAPA	BLACKOUT SHADECLOTH	--	MANUAL OPERATION

ROOM FINISH SCHEDULE

ROOM NAME	FLOOR	BASE	WALL	CEILING	NOTES
STORAGE (INT)	WD1	WOOD	P2	GWB/P1	
MEETING ROOM	WD1	WOOD	P2/P3	GWB/P1	
CORRIDOR	WD1	WOOD	P2	GWB/P1	
WOMEN	PT1	---	PT2/PT3*	GWB/P1	*SEE ELEVATIONS / SS2 @ LAVS
MEN	PT1	---	PT2/PT3*	GWB/P1	*SEE ELEVATIONS / SS2 @ LAVS
KITCHEN	WD1	WOOD	P2	GWB/P1	*SS1 @ KITCHEN COUNTERS & BACKSPLASH
RECEPTION	WD1	WOOD	ST1/P2/P3*	GWB/P1/P5**	*SEE FINISH PLAN *PAINT RECESSED CEILING P5
WAITING	WD1	WOOD	P2/P4	GWB/P1/P5*	*PAINT RECESSED CEILING P5
OFFICE	CPT1	WOOD	P2/P4	GWB/P1	
MECHANICAL	SC	---	P2	P1*	*CEMENTITIOUS CEILING
STORAGE (EXT)	SC	---	P2	P1	

GRAPHIC SCALE

1/4" = 1'-0" 0 1/2" 1" 2"

SYM	DESCRIPTION	DATE	APPR

NAVFAC

SEAL

A/E INFO

APPROVED

FOR COMMANDER NAVFAC

ACTIVITY: HERM RAWLINGS

SATISFACTORY TO DATE MM/DD/YY

DES ??? DRW ??? CHK ???

PM/DM JTL/APK

BRANCH MANAGER TLD

CHIEF ENG/ARCH RLW

FIRE PROTECTION DPS

DEPARTMENT OF THE NAVY
NAVAL FACILITIES ENGINEERING COMMAND
NAVAL FACILITIES ENGINEERING COMMAND NORFOLK, VA
HAMPTON ROADS IPT
SURFACE COMBAT SYSTEM CENTER WALLOPS ISLAND, VA

HOUSING WELCOME CENTER

FINISH PLAN

SCALE: AS NOTED

EPROJECT NO.: 1366574

CONSTR. CONTR. NO.

NAVFAC DRAWING NO. 12708220

SHEET 48 OF 70

I-601

DRAWFORM REVISION: 10 MARCH 2009

FILE NAME: P:\VA\Wallops Island\MILCON\2016_1366574_P238_DBB_HousingWelcomeCenter\B_Design\Drawings\Sheet Files\09_Interiors\H238-1366574-I-601.dwg LAYOUT NAME: I-601 PLOTTED: Wednesday, December 02, 2015 - 5:36pm USER: donna.presnell

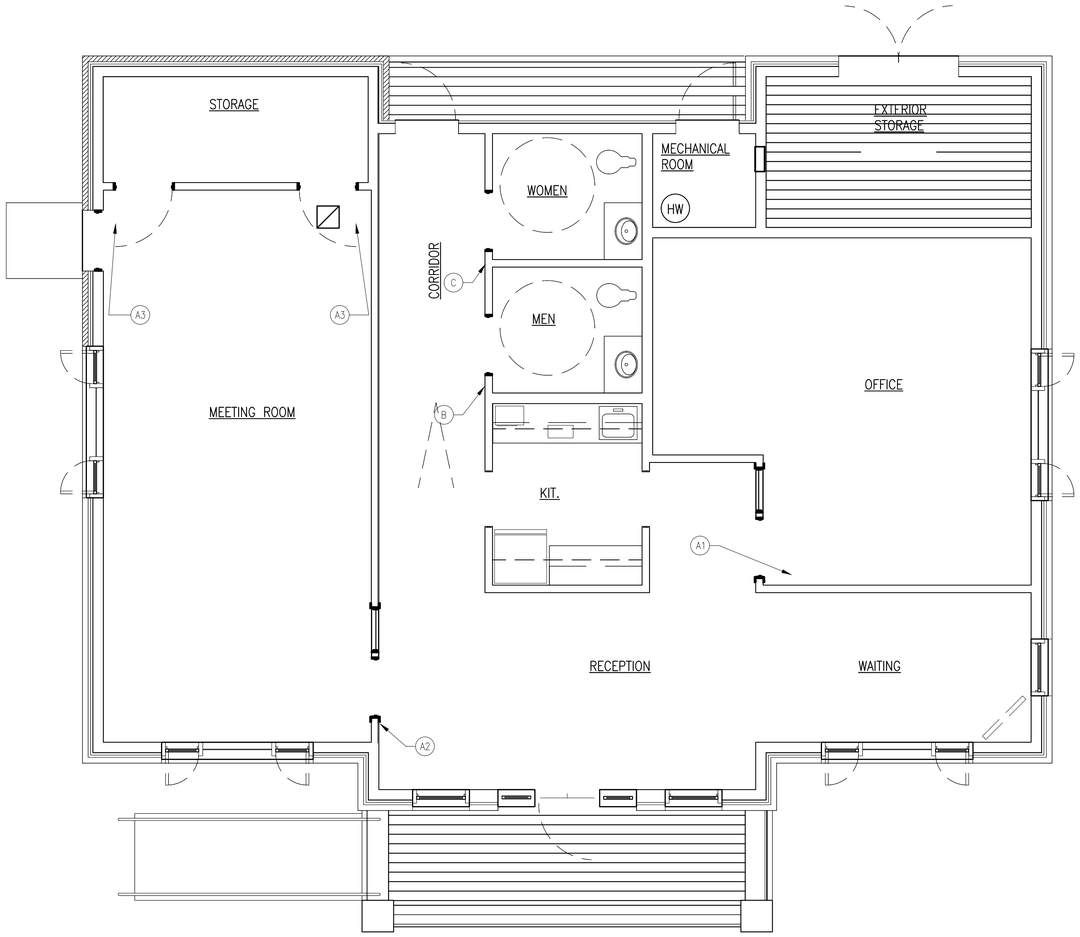

1 SIGNAGE PLAN
SCALE: 1/4" = 1'-0"

SIGNAGE KEY	
SIGN TYPE	LABEL
A1	FAMILY HOUSING MANAGER
A2	MEETING ROOM
A3	STORAGE ROOM
B	WOMEN
C	MEN

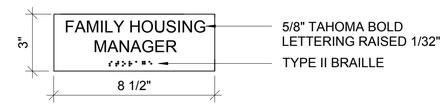

A1, A2, A3

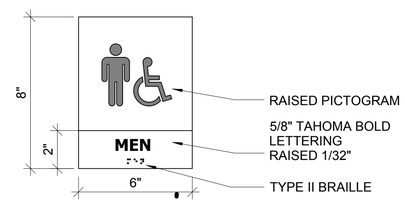

B

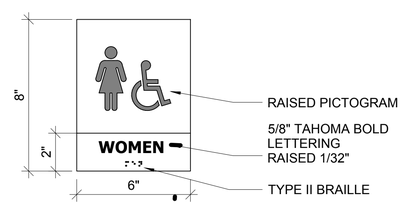

C

2 SIGNAGE TYPES
SCALE: NTS

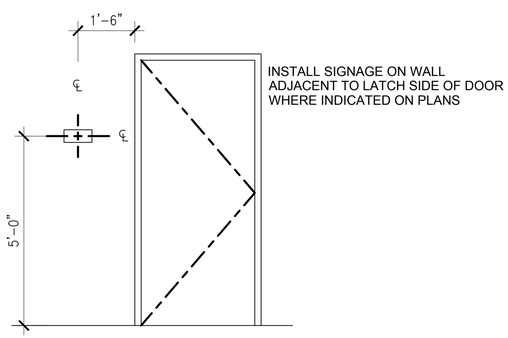

3 SIGNAGE MOUNTING LOCATION
SCALE: NTS

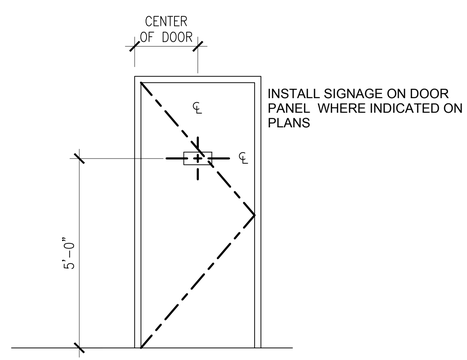

4 SIGNAGE MOUNTING LOCATION
SCALE: NTS

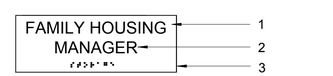

1 - INSERT COLOR: #706 TAN
2- COPY COLOR: #734 DARK GREY
3 - END CAP/EDGE RAIL COLOR: #734 DARK GREY
BASIS OF DESIGN: SYSTEM 290 MODULAR

5 SIGNAGE BASIS OF DESIGN
SCALE: NTS

GENERAL SHEET NOTES

1. REFER TO SIGN TYPES AND ASSOCIATED AREAS FOR SPECIFIC GRAPHICS.
2. MOUNTING OF THE MODULAR SIGNAGE SYSTEM SHALL INCLUDE SURFACE MOUNTING WITH SCREW-IN APPLICATIONS FOR INTERIOR WALLS.

PLAN NORTH

GRAPHIC SCALE
1/4" = 1'-0" 0 1/2" 1" 2"

SYM	DESCRIPTION	DATE	APPR

SEAL

A/E INFO

APPROVED
FOR COMMANDER NAVFAC

ACTIVITY: HERM RAWLINGS

SATISFACTORY TO DATE MM/DD/YY
DES CBM | DRW CBM | CHK ???
PM/DM JTL/APK
BRANCH MANAGER TLD
CHIEF ENG/ARCH RLW
FIRE PROTECTION DPS

DEPARTMENT OF THE NAVY
NAVAL FACILITIES ENGINEERING COMMAND
HAMPTON ROADS IPT
NAVAL FACILITIES ENGINEERING COMMAND
NORFOLK, VA
SURFACE COMBAT SYSTEM CENTER
WALLOPS ISLAND, VA
HOUSING WELCOME CENTER
SIGNAGE PLAN AND DETAILS

SCALE: AS NOTED
EPROJECT NO.: 1366574
CONSTR. CONTR. NO.
NAVFAC DRAWING NO. 12708221
SHEET 49 OF 70
I-701

DRAWFORM REVISION: 10 MARCH 2009

FILE NAME: P:\VA\Wallops Island\WLCON\2016_1366574_P238_DBB_JHousingWelcomeCenter\B_Design\Drawings\Sheet Files\09_Interiors\I-701.dwg LAYOUT NAME: I-701 PLOTTED: Wednesday, December 02, 2015 - 5:36pm USER: donna.presnell

FIRE ALARM/MASS NOTIFICATION GENERAL NOTES

1. CONTRACTOR SHALL PROVIDE A COMPLETE, COMBINED ADDRESSABLE FIRE ALARM AND MASS NOTIFICATION SYSTEM THROUGHOUT THE BUILDING. SYSTEM SHALL INCLUDE MANUAL PULL STATIONS, SPEAKERS, STROBES, EVACUATE/ANNOUNCEMENT DISPLAYS, WIRING, CONDUIT AND ALL OTHER ASSOCIATED EQUIPMENT. ALL WORK AND INSTALLATION SHALL CONFORM WITH, BUT IS NOT LIMITED TO THE APPLICABLE PROVISIONS OF THE CODES AND STANDARDS ON THIS SHEET AND THE CONTRACT DOCUMENTS.

2. CONTRACTOR SHALL PROVIDE ADDRESSABLE CLASS B SIGNALING LINE CIRCUITS, CLASS B NOTIFICATION APPLIANCE CIRCUITS AND CLASS B INITIATING DEVICE CIRCUITS. PROVIDE ALL EQUIPMENT, SOFTWARE, PROGRAMMING, ACCESSORIES WHETHER MENTIONED OR NOT, INCLUDING SMOKE SENSORS, ADDRESSABLE INTERFACE AND RELAY DEVICES, TERMINAL CABINETS, CONDUIT, WIRE, JUNCTION BOXES, FASTENERS, HANGERS, ETC.

3. FIRE ALARM/MASS NOTIFICATION SYSTEM PANELS AND CABINETS SHALL BE RECESSED-MOUNTED IN FINISHED AREAS WITH THE TOP OF THE PANEL AT 72 INCHES ABOVE FINISHED FLOOR OR CENTER OF PANEL AT 60 INCHES ABOVE FINISH FLOOR, WHICHEVER IS LOWER. NOTIFICATION APPLIANCE CIRCUIT PANELS MAY BE SURFACE-MOUNTED IN ELECTRICAL ROOMS.

4. ALL FIRE ALARM WIRING SHALL BE INSTALLED IN CONDUIT. MINIMUM CONDUIT SIZE SHALL BE ¾".

5. CONDUIT SHALL BE RUN CONCEALED WHERE POSSIBLE.

6. PAINT ALL FIRE ALARM JUNCTION BOXES AND COVERS RED IN UNFINISHED AREAS. IN FINISHED AREAS WHERE CONDUIT CANNOT BE CONCEALED, CONDUIT AND JUNCTION BOXES CAN BE PAINTED TO MATCH THE ROOM FINISH, THE INSIDE COVER OF THE JUNCTION BOX MUST BE IDENTIFIED AS "FIRE ALARM" AND THE CONDUIT MUST HAVE PAINTED RED BANDS ¾" INCH WIDE AT 20 FOOT INTERVALS AND ON BOTH SIDES OF A FLOOR, WALL OR CEILING PENETRATION.

7. INSTALL ALL NEW WALL MOUNTED STROBES AND SPEAKER/STROBES 6-INCHES BELOW CEILINGS OR 80-INCHES AFF, WHICHEVER IS LOWER, TO THE CENTERLINE OF LIGHT APPARATUS.

8. PULL STATIONS SHALL BE DOUBLE-ACTION TYPE. THE TOP OF THE PULL STATION SHALL BE INSTALLED AT 48-INCHES AFF.

9. ALL EQUIPMENT AND DEVICES SHALL BE UL LISTED FOR USE IN FIRE ALARM/MASS NOTIFICATION SYSTEMS.

10. FIRE ALARM MASS NOTIFICATION SYSTEM MUST UNDERGO INTELLIGIBILITY TESTING IN ACCORDANCE WITH UFC 3-600-01 AND UFC 4-021-01. COMMERCIALLY AVAILABLE TEST INSTRUMENTATION SHALL BE USED TO MEASURE THE INTELLIGIBILITY. ENSURE THAT A CIS SCORE OF AT LEAST 0.7 IS ACHIEVED IN EACH AREA WHERE BUILDING OCCUPANTS MAY TYPICALLY BE FOUND. AREAS OF THE BUILDING PROVIDED WITH HARD WALL AND CEILING SURFACES (SUCH AS METAL OR CONCRETE) THAT ARE FOUND TO CAUSE EXCESSIVE SOUND REFLECTIONS MAY BE PERMITTED TO HAVE A CIS SCORE LESS THAN THE MINIMUM REQUIRED VALUE IF APPROVED BY THE NAVFAC FIRE PROTECTION ENGINEER.

FIRE ALARM/MASS NOTIFICATION SYMBOLS LEGEND

FAMN	FIRE ALARM/MNS CONTROL PANEL
TEXT	EVACUATE/ANNOUNCEMENT SIGN
BATT	FIRE ALARM BATTERY CABINET
FATR	DATA GATHERING MODULE/TRANSMITTER
SS	TRANSIENT VOLTAGE SURGE SUPPRESSER
P	MANUAL PULL STATION
	PHOTOELECTRIC SMOKE DETECTOR
XX	CEILING-MOUNTED SPEAKER/STROBE (XX INDICATES CANDELA)
XX	CEILING-MOUNTED STROBE (XX INDICATES CANDELA)

APPLICABLE CODES AND STANDARDS

NFPA 1, UNIFORM FIRE CODE, (2012)

NFPA 70, NATIONAL ELECTRIC CODE, (2011)

NFPA 72, NATIONAL FIRE ALARM AND SIGNALING CODE, (2013)

NFPA 90A, INSTALLATION OF AIR-CONDITIONING AND VENTILATING SYSTEMS, (2012)

NFPA 101, LIFE SAFETY CODE, (2012)

UFC 1-200-01, DESIGN: GENERAL BUILDING REQUIREMENTS, (CHANGE 1, 2013)

UFC 3-600-01, FIRE PROTECTION ENGINEERING FOR FACILITIES, (CHANGE 3, 2013)

UFC 3-600-10N, FIRE PROTECTION ENGINEERING, (2007)

UFC 4-010-01 DOD MINIMUM ANTITERRORISM STANDARDS FOR BUILDINGS, (CHANGE 1, 2013)

UFC 4-021-01, DESIGN AND O&M MASS NOTIFICATION SYSTEMS, (CHANGE 1, 2010)

IBC, INTERNATIONAL BUILDING CODE, (2012)

SYM	DESCRIPTION	DATE	APPR

NAVFAC

SEAL

A/E INFO

APPROVED

FOR COMMANDER NAVFAC

ACTIVITY: HERM RAWLINGS

SATISFACTORY TO DATE MM/DD/YY

DES ERZ DRW ERZ CHK DPS

PM/DM JTL/APK

BRANCH MANAGER SLW DPS

CHIEF ENG/ARCH RLW RLW

FIRE PROTECTION SLW DPS

DEPARTMENT OF THE NAVY
NAVAL FACILITIES ENGINEERING COMMAND
HAMPTON ROADS IPT

NAVAL FACILITIES ENGINEERING COMMAND
NORFOLK, VA

SURFACE COMBAT SYSTEM CENTER
WALLOPS ISLAND, VA

HOUSING WELCOME CENTER

FIRE ALARM NOTES, SYMBOLS & LEGEND

SCALE: AS SHOWN

EPROJECT NO.: 1366574

CONSTR. CONTR. NO.

NAVFAC DRAWING NO.
12708222

SHEET 50 OF 70

F-001

DRAWFORM REVISION: 10 MARCH 2009

FILE NAME: P:\VA\Wallops Island\MILCON\2016_1366574_P238_DBB_HousingWelcomeCenter\B_Design\Drawings\Sheet Files\11_Fire Protection\F238-1366574-F-001.dwg LAYOUT NAME: F-001 PLOTTED: Friday, December 04, 2015 - 2:06pm USER: eric.zdanikiewicz

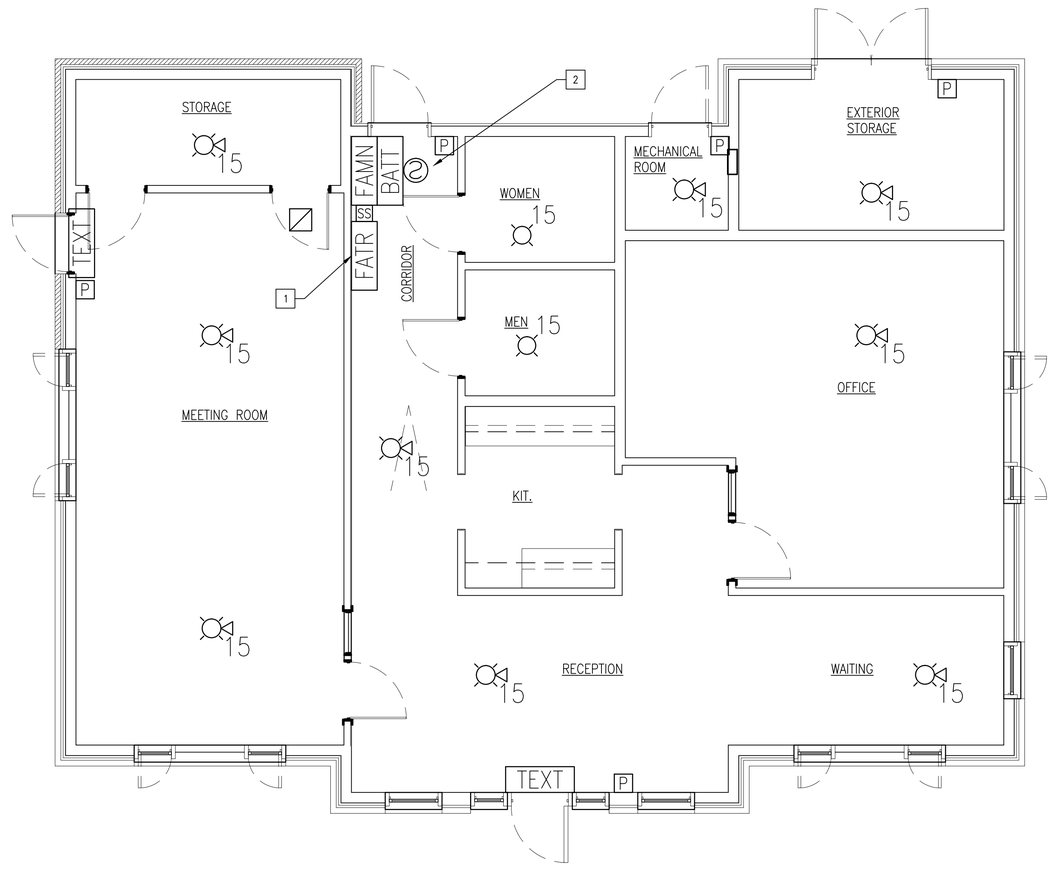

FIRE ALARM NEW WORK PLAN

SCALE: 1/4" = 1'-0"

GENERAL SHEET NOTES

1. SEE F-001 FOR GENERAL NOTES, SYMBOLS, LEGEND, AND APPLICABLE CODES AND STANDARDS.

WORK KEYNOTES

1. FIRE ALARM SYSTEM SHALL UTILIZE THE EXISTING FIBER NETWORK TO FOR FIRE ALARM SIGNAL REPORTING TO THE DIGITIZE SYSTEM 3505 PRISM LX HEADEND EQUIPMENT.
2. PROVIDE SMOKE DETECTOR FOR FIRE ALARM PANEL PROTECTION.

PLAN NORTH

GRAPHIC SCALE

1/4"=1'-0" 0' 2' 4' 8'

SYM	DESCRIPTION	DATE	APPR

NAVFAC

SEAL

A/E INFO

APPROVED

FOR COMMANDER NAVFAC

ACTIVITY

HERM RAWLINGS

SATISFACTORY TO DATE MM/DD/YY

DES ERZ DRW ERZ CHK DPS

PM/DM JTL/APK

BRANCH MANAGER SLW

CHIEF ENG/ARCH RLW

FIRE PROTECTION SLW DPS

DEPARTMENT OF THE NAVY
NAVAL FACILITIES ENGINEERING COMMAND
HAMPTON ROADS IPT
NAVAL FACILITIES ENGINEERING COMMAND
NORFOLK, VA
SURFACE COMBAT SYSTEM CENTER
WALLOPS ISLAND, VA

HOUSING WELCOME CENTER

FIRE ALARM NEW WORK PLAN

SCALE: AS SHOWN

EPROJECT NO.: 1366574

CONSTR. CONTR. NO.

NAVFAC DRAWING NO.
12708223

SHEET 51 OF 70

F-101

DRAWFORM REVISION: 10 MARCH 2009

FILE NAME: P:\VA\Wallops Island\WLCON\2016_1366574_P238_DBB_HousingWelcomeCenter\B_Design\Drawings\Sheet Files\11_Fire Protection\F238-1366574-F-101.dwg LAYOUT NAME: F-101 PLOTTED: Friday, December 04, 2015 - 2:08pm USER: eric.zdanikiewicz

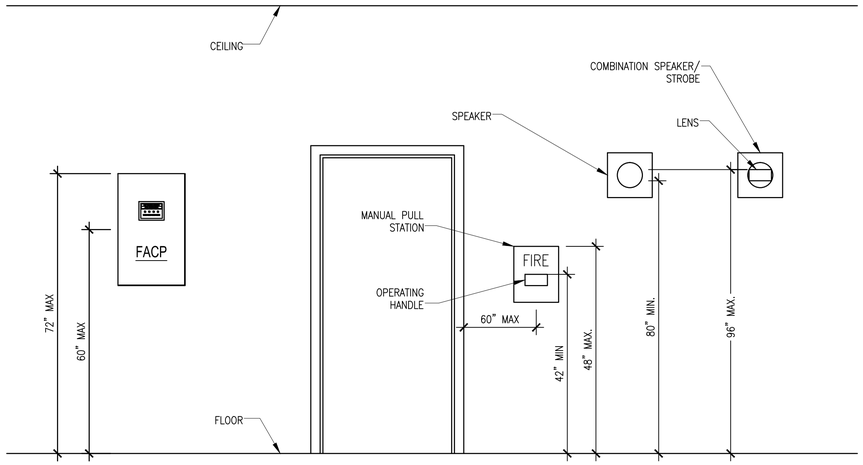

C1 DEVICE & APPLIANCE MOUNTING HEIGHTS

SCALE: NONE

		A	B	C	D	E	F	G	H	I	J	K	L	M	N	O	P	Q	R	S
		ACTUATE COMMON FIRE ALARM SIGNAL INDICATOR	ACTUATE AUDIBLE FIRE ALARM SIGNAL	ACTUATE COMMON SUPERVISORY ALARM SIGNAL INDICATOR	ACTUATE AUDIBLE SUPERVISORY ALARM SIGNAL	ACTUATE COMMON TROUBLE SIGNAL INDICATOR	ACTUATE AUDIBLE TROUBLE SIGNAL	INDICATE FIRE ALARM, DESCRIPTION OF DEVICE, DEVICE ADDRESS & DEVICE LOCATION AT THE FAMN AND REMOTE ANNUNCIATOR	INDICATE SUPERVISORY ALARM, DESCRIPTION OF DEVICE, DEVICE ADDRESS & DEVICE LOCATION AT THE FAMN AND REMOTE ANNUNCIATOR	INDICATE TROUBLE CONDITION, DESCRIPTION OF TYPE & SOURCE AT THE FAMN AND REMOTE ANNUNCIATOR	DISPLAY/PRINT CHANGE OF STATUS AT THE FACP AND REMOTE ANNUNCIATOR	TRANSMIT ALARM CONDITION VIA TELEGRAPHIC TRANSMITTER	TRANSMIT SUPERVISORY CONDITION VIA TELEGRAPHIC TRANSMITTER	TRANSMIT TROUBLE CONDITION VIA TELEGRAPHIC TRANSMITTER	BROADCAST AUDIBLE PRERECORDED FIRE ALARM EVACUATION MESSAGE	ACTUATE VISUAL NOTIFICATION APPLIANCES (STROBES)	INTERRUPT PRERECORDED FIRE ALARM EVACUATION MESSAGE	SHUT DOWN ASSOCIATED HVAC UNIT	ILLUMINATE "EVACUATE" ON TEXT SIGN	ILLUMINATE "ANNOUNCEMENT" ON TEXT SIGNS
MANUAL PULL STATION	1	X	X					X			X	X			X	X			X	
AREA SMOKE DETECTOR	2	X	X					X			X	X			X	X			X	
FIRE ALARM LOW BATTERY	3					X	X			X	X			X						
CIRCUIT FAULT (OPEN, GROUND,SHORT)	4					X	X			X	X			X						
FIRE ALARM AC POWER FAILURE	5					X	X			X	X			X						
AMPLIFIER AC FAILURE	6					X	X			X	X			X						
LOSS OF AMPLIFIER	7					X	X			X	X			X						
LIVE VOICE ANNOUNCEMENT FROM MNS MICROPHONE	8			X	X				X				X			X	X			X

B1 FIRE ALARM MASS NOTIFICATION OPERATIONAL MATRIX

SCALE: NONE

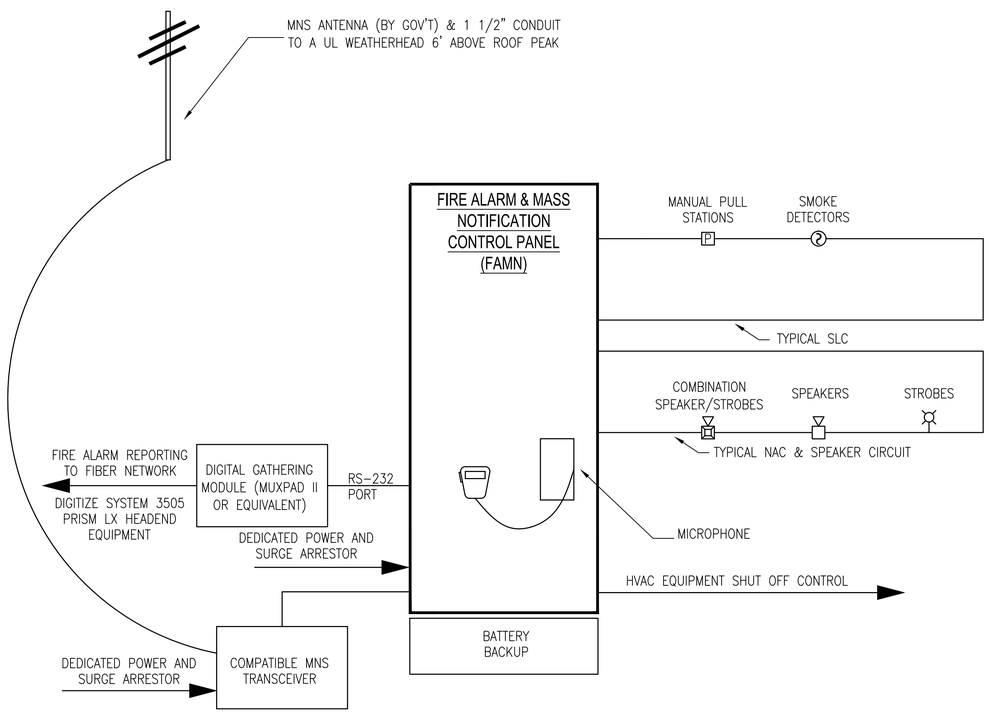

A1 FIRE ALARM MASS NOTIFICATION RISER DIAGRAM

SCALE: NONE

SYM	DESCRIPTION	DATE	APPR

SEAL

A/E INFO

APPROVED

FOR COMMANDER NAVFAC

ACTIVITY: HERM RAWLINGS

SATISFACTORY TO DATE MM/DD/YY

DES ERZ DRW ERZ CHK DPS

PM/DM JTL/APK

BRANCH MANAGER SLW

CHIEF ENG/ARCH RLW

FIRE PROTECTION SLW DPS

DEPARTMENT OF THE NAVY
NAVAL FACILITIES ENGINEERING COMMAND
HAMPTON ROADS IPT

NAVAL FACILITIES ENGINEERING COMMAND
NORFOLK, VA

WALLOPS ISLAND, VA

SURFACE COMBAT SYSTEM CENTER

HOUSING WELCOME CENTER

FIRE ALARM DETAILS

SCALE: AS SHOWN

EPROJECT NO.: 1366574

CONSTR. CONTR. NO.

NAVFAC DRAWING NO. 12708224

SHEET 52 OF 70

F-501

DRAWFORM REVISION: 10 MARCH 2009

FILE NAME: P:\VA\Wallops Island\MILCON\2016_1366574_P238_DBB_HousingWelcomeCenter\B_Design\Drawings\Sheet Files\11_Fire Protection\H238-1366574-F-501.dwg LAYOUT NAME: F-501 PLOTTED: Friday, December 04, 2015 - 2:08pm USER: eric.zdanikiewicz

PLUMBING ABBREVIATIONS

AAV	AIR ADMITTANCE VALVE
AC	ABOVE CEILING
ADA	AMERICANS WITH DISABILITIES ACT
AFF	ABOVE FINISHED FLOOR
AP	ACCESS PANEL
BF	BELOW FLOOR
BG	BELOW GRADE
BFP	BACKFLOW PREVENTER
BTUH	BRITISH THERMAL UNIT PER HOUR
CO	CLEANOUT
CONC	CONCRETE
CW	DOMESTIC COLD WATER
DHW	DOMESTIC HOT WATER
DN	DOWN
DWG	DRAWING
DWV	DRAIN, WASTE, VENT
EA	EACH
EL	ELEVATION
EQUIP	EQUIPMENT
ETR	EXISTING TO REMAIN
EWC	ELECTRIC WATER COOLER
F	FAHRENHEIT
FCO	FLOOR CLEANOUT
FD	FLOOR DRAIN
FLA	FULL LOAD AMPS
FT	FEET
G	NATURAL GAS
GAL	GALLON
GFCI	GOVERNMENT FURNISHED, CONTRACTOR INSTALLED
GPH	GALLONS PER HOUR
GPM	GALLONS PER MINUTE
HB	HOSE BIBB
HC	HANDICAP ACCESSIBLE
HP	HORSEPOWER
HW	DOMESTIC HOT WATER
HWR	DOMESTIC HOT WATER RECIRC
HZ	HERTZ
ICE	ICE MAKER
INV	INVERT ELEVATION
IWC	INCHES OF WATER COLUMN
KS	KITCHEN SINK
LAV	LAVATORY
MAX	MAXIMUM
MIN	MINIMUM
MV	MIXING VALVE
NIC	NOT IN CONTRACT
PH	PHASE
PRS	PRESSURE REDUCING STATION
PSI	POUNDS PER SQUARE INCH
RL	ROOF LEADER
RD	ROOF DRAIN
REF	REFRIGERATOR
RPM	REVOLUTIONS PER MINUTE
SAN	SANITARY
SH	SHOWER
SIM	SIMILAR
SS	SERVICE SINK
TYP	TYPICAL
UON	UNLESS OTHERWISE NOTED
UR	URINAL
V	VENT
VS	VENT STACK
VTR	VENT THRU ROOF
W	WASTE
WC	WATER CLOSET
WCO	WALL CLEANOUT
WHA	WATER HAMMER ARRESTOR
WS	WASTE STACK
WSHR	WASHING MACHINE
°	DEGREE

PLUMBING LEGEND

- DOMESTIC COLD WATER PIPING (CW)
- DOMESTIC HOT WATER PIPING (HW)
- DOMESTIC HOT WATER RETURN PIPING (HWR)
- G — NATURAL GAS PIPNG (G)
- SOIL, WASTE, OR SANITARY SEWER PIPING (W)
- CA — COMPRESSED AIR PIPING (CA)
- RL — RAIN LEADER
- V — VENT PIPNG (V)
- DOWNWARD SLOPE
- FLOW ARROW
- GATE VALVE (HORIZONTAL & VERTICAL)
- CHECK VALVE
- TEMPERATURE AND PRESSURE RELIEF VALVE
- UNION
- HOSE BIBB (HB)
- EXTERIOR WALL HYDRANT (WH)
- FLOOR DRAIN (FD)
- FLOOR CLEANOUT (FCO)
- WALL CLEANOUT (WCO)
- CLEANOUT TO GRADE (COTG)
- (A) — WATER HAMMER ARRESTOR (PDI SIZE FIXTURE UNIT RATING 1–11)
- VENT THRU ROOF (VTR)
- P-1A — PLUMBING FIXTURE MARK (SEE SCHEDULE ON SHEET P-601)
- DWH-1 — DOMESTIC WATER HEATER MARK (SEE SCHEDULE ON SHEET P-601)
- WH-1 — WALL HYDRANT MARK (SEE SCHEDULE ON SHEET P-601)
- PIPE TURNING DOWN
- PIPE TURNING UP
- THIN LINE WEIGHT INDICATES EXISTING ITEM TO REMAIN
- HEAVY LINE WEIGHT INDICATES NEW WORK TO BE PROVIDED
- INDICATES PIPE TO BE ABANDONED IN PLACE
- INDICATES PIPE TO BE DEMOLISHED

PLUMBING SYMBOLS

- POINT OF DISCONNECTION
- POINT OF CONNECTION

GENERAL PLUMBING NOTES

1. THESE GENERAL PLUMBING NOTES APPLY TO THE ALL PLUMBING DRAWINGS IN THIS SET. SHEET SPECIFIC NOTES ARE INDICATED ON EACH SHEET UNDER GENERAL SHEET NOTES.
2. INSTALL ALL EQUIPMENT PER MANUFACTURER'S INSTRUCTIONS.
3. PATCH ALL HOLES FROM REMOVAL OF PIPING OR EQUIPMENT TO MATCH ADJACENT CONSTRUCTION.
4. PROVIDE ALL MATERIALS AND EQUIPMENT AND PERFORM ALL LABOR REQUIRED TO INSTALL COMPLETE AND OPERABLE PLUMBING SYSTEMS AS INDICATED ON THE DRAWINGS, SPECIFIED AND AS REQUIRED BY CODE.
5. PROVIDE ALL PLUMBING FIXTURES AND EQUIPMENT WITH ACCESSIBLE STOPS.
6. FIELD VERIFY ALL DIMENSIONS.
7. UNLESS INDICATED OTHERWISE, PIPING TO BE REMOVED SHALL INCLUDE ASSOCIATED HANGERS, INSULATION, AND OTHER APPURTENANCES.
8. ALL CLEANOUTS SHALL BE FULL SIZE OF PIPE.
9. ALL PIPING WORK SHALL BE COORDINATED WITH ALL TRADES INVOLVED. OFFSETS IN PIPING AROUND OBSTRUCTIONS AT NO ADDITIONAL COST TO THE GOVERNMENT.
10. ALL PLUMBING VENTS WITHIN A 10'–0" RADIUS OF EXHAUST VENTS SHALL BE EXTENDED TO A HEIGHT OF 2'–0" ABOVE EXHAUST VENT CROWN.
11. ALL PLUMBING VENTS WITHIN A 10'–0" RADIUS OF ANY ROOF TOP UNIT SHALL BE EXTENDED TO A HEIGHT OF 3'–0" ABOVE THE FRESH AIR INTAKE.
12. ALL HOSE BIBBS SHALL BE MOUNTED 18" ABOVE FINISHED FLOOR UON.
13. ALL WALL HYDRANTS SHALL BE MOUNTED 24" ABOVE FINISHED GRADE UON.
14. SLOPES AND INVERT ELEVATIONS OF ALL INTERIOR PIPING SHALL BE ESTABLISHED BEFORE ANY PIPING IS INSTALLED, IN ORDER THAT PROPER SLOPES WILL BE MAINTAINED. ALL PIPING SHALL BE RUN TO AVOID CONFLICT WITH OTHER TRADES.
15. COORDINATE WITH ARCHITECTURAL WORKING DRAWINGS PRIOR TO ROUGHING–IN PLUMBING FIXTURES.
16. MAKE PROPER HOT AND COLD WATER, HOT WATER RECIRCULATING, WASTE, VENT, COMPRESSED AIR, AND GAS, ETC PIPING CONNECTIONS TO ALL FIXTURES AND EQUIPMENT EVEN THOUGH ALL BRANCHES, FITTINGS AND CONNECTIONS ARE NOT SHOWN.
17. PROVIDE DEEP SEAL TRAPS FOR ALL FLOOR DRAINS.
18. IT IS THE INTENTION OF THE DRAWINGS TO COVER ALL WORK AND MATERIAL FOR A COMPLETE FIRST CLASS INSTALLATION. ANY EQUIPMENT, PLUMBING FIXTURE, TRIM HARDWARE AND/OR DEVICES USUALLY UTILIZED IN THE CLASS OF WORK, THOUGH NOT SPECIFICALLY MENTIONED OR SHOWN ON THE DRAWINGS, BUT WHICH MAY BE NECESSARY FOR THE SATISFACTORY COMPLETION OF THE WORK (AS DETERMINED BY THE CONTRACTING OFFICER). SHALL BE FURNISHED AND INSTALLED BY THE CONTRACTOR AS PART OF HIS TOTAL WORK.
19. ENTIRE INSTALLATION, INCLUDING MATERIALS, EQUIPMENT, AND WORKMANSHIP, SHALL CONFORM WITH ALL APPLICABLE LAWS, CODES, AND REGULATIONS OF MUNICIPAL, STATE, AND FEDERAL AUTHORITIES, ALSO THE LATEST EDITION OF THE STATE BUILDING CODES, APPLICABLE ASPE STANDARDS AND OTHER REGULATORY BODIES HAVING JURISDICTION OVER THE CLASS OF WORK. WHERE APPLICABLE, MATERIALS AND EQUIPMENT SHALL HAVE STAMPS OR SEALS OF ARI, ASME, UL, OR ASTM. THE CONTRACTOR SHALL MAKE TESTS FOR ACCEPTANCE AND APPROVAL BY CODE AND THE REQUIREMENTS OF APPLICABLE REGULATORY AGENCIES. REQUIRED TESTS SHALL BE PERFORMED IN THE PRESENCE OF THE GOVERNMENT UNLESS OTHERWISE WAIVED IN WRITING.
20. THE CONTRACTOR SHALL OBTAIN AND PAY FOR ALL PERMITS, LICENSES, DOCUMENTS, AND SERVICES RELATED TO INSTALLATION OF THE WORK.
21. THE CONTRACTOR SHALL COORDINATE HIS WORK WITH OTHER TRADES IN ORDER TO RESOLVE ANY CONFLICTS THAT MIGHT ARISE DUE TO THE LOCATION OF EQUIPMENT OR THE USE OF THE SPACE.
22. CONTRACTOR SHALL GUARANTEE ALL WORK FOR A PERIOD OF ONE YEAR FROM DATE OF SUBSTANTIAL COMPLETION.
23. RUN ALL PIPING CONCEALED ABOVE CEILING OR IN WALLS OR CHASES UNLESS OTHERWISE NOTED.
24. EXISTING PIPE, AND EQUIPMENT SIZES NOTED ARE FOR THE CONVENIENCE OF THE CONTRACTOR ONLY AND ARE NOT WARRANTED TO BE CORRECT. THE CONTRACTOR SHALL FIELD VERIFY ALL EXISTING DUCT, PIPE, AND EQUIPMENT SIZES AND THEIR RESPECTIVE LOCATIONS BEFORE PROCEEDING WITH ANY ASSOCIATED WORK.
25. CUT OPENINGS, AS REQUIRED, IN THE EXISTING CONSTRUCTION FOR THE INSTALLATION OF PIPING AND EQUIPMENT. PATCH AND REPAIR TO MATCH THE EXISTING ADJACENT CONSTRUCTION. OPENINGS IN EXISTING CONCRETE MASONRY CONSTRUCTION SHALL BE SAW CUT.
26. LAYOUT OF PIPING IS DIAGRAMMATIC. RUN ALL EXPOSED PIPING AS HIGH AS POSSIBLE UNLESS OTHERWISE NOTED. ALLOW FOR RISES, DROPS, AND OFFSETS AS REQUIRED.
27. AFTER THE PIPING IS INSULATED, PROVIDE SETON BRAND OR EQUAL FACTORY–FABRICATED PIPE LABELS, WITH DIRECTION OF FLOW ARROWS, ON THE FOLLOWING PIPING, AT 10 FOOT ON CENTER ON THE PIPING MAINS AND 5 FOOT ON CENTER ON THE BRANCH RUNOUTS FROM MAINS.
28. AFTER PRELIMINARY OPERATIONAL TESTING OF ALL BOILERS OR DIRECT FIRED DOMESTIC WATER HEATERS WITH A CAPACITY GREATER THAN 400,000 BTUH, THE BOILER SHALL BE INSPECTED AND AN OPERATIONAL TEST SHALL BE PERFORMED BY A NAVFAC FACILITIES ENGINEERING COMMAND BOILER INSPECTOR. ALLOW 15 DAYS ADVANCE NOTICE FOR SCHEDULING AN INSPECTOR TO CONDUCT AN ACCEPTANCE OPERATIONAL TEST AND INSPECTION.

SYM	DESCRIPTION	DATE	APPR

NAVFAC

SEAL

A/E INFO

APPROVED

FOR COMMANDER NAVFAC

ACTIVITY: HERM RAWLINGS

SATISFACTORY TO DATE MM/DD/YY

DES DAV | DRW DAV | CHK TLH

PM/DM JTL/APK

BRANCH MANAGER TLH TLD

CHIEF ENG/ARCH RLW RLW

FIRE PROTECTION SCW DPS

DEPARTMENT OF THE NAVY
NAVAL FACILITIES ENGINEERING COMMAND
NAVAL FACILITIES ENGINEERING COMMAND NORFOLK, VA
HAMPTON ROADS IPT
SURFACE COMBAT SYSTEM CENTER
WALLOPS ISLAND, VA
HOUSING WELCOME CENTER
PLUMBING LEGEND, ABBREVIATIONS & GENERAL NOTES

SCALE: NONE

EPROJECT NO.: 1366574

CONSTR. CONTR. NO.

NAVFAC DRAWING NO. 12708225

SHEET 53 OF 70

P-001

DRAWFORM REVISION: 10 MARCH 2009

FILE NAME: P:\VA\Wallops Island\MILCON\2016_1366574_P238_DRB_HousingWelcomeCenter\B_Design\Drawings\Sheet Files\12_Plumbing\V238-1366574-P-001.dwg LAYOUT NAME: P-001 PLOTTED: Monday, November 23, 2015 - 12:32pm USER: john.m.taylor1
FILE NAME: P:\VA\Wallops Island\MILCON\2016_1366574_P238_DRB_HousingWelcomeCenter\B_Design\Drawings\Sheet Files\12_Plumbing\V238-1366574-P-001.dwg LAYOUT NAME: P-001 PLOTTED: Monday, November 23, 2015 - 12:32pm USER: john.m.taylor1

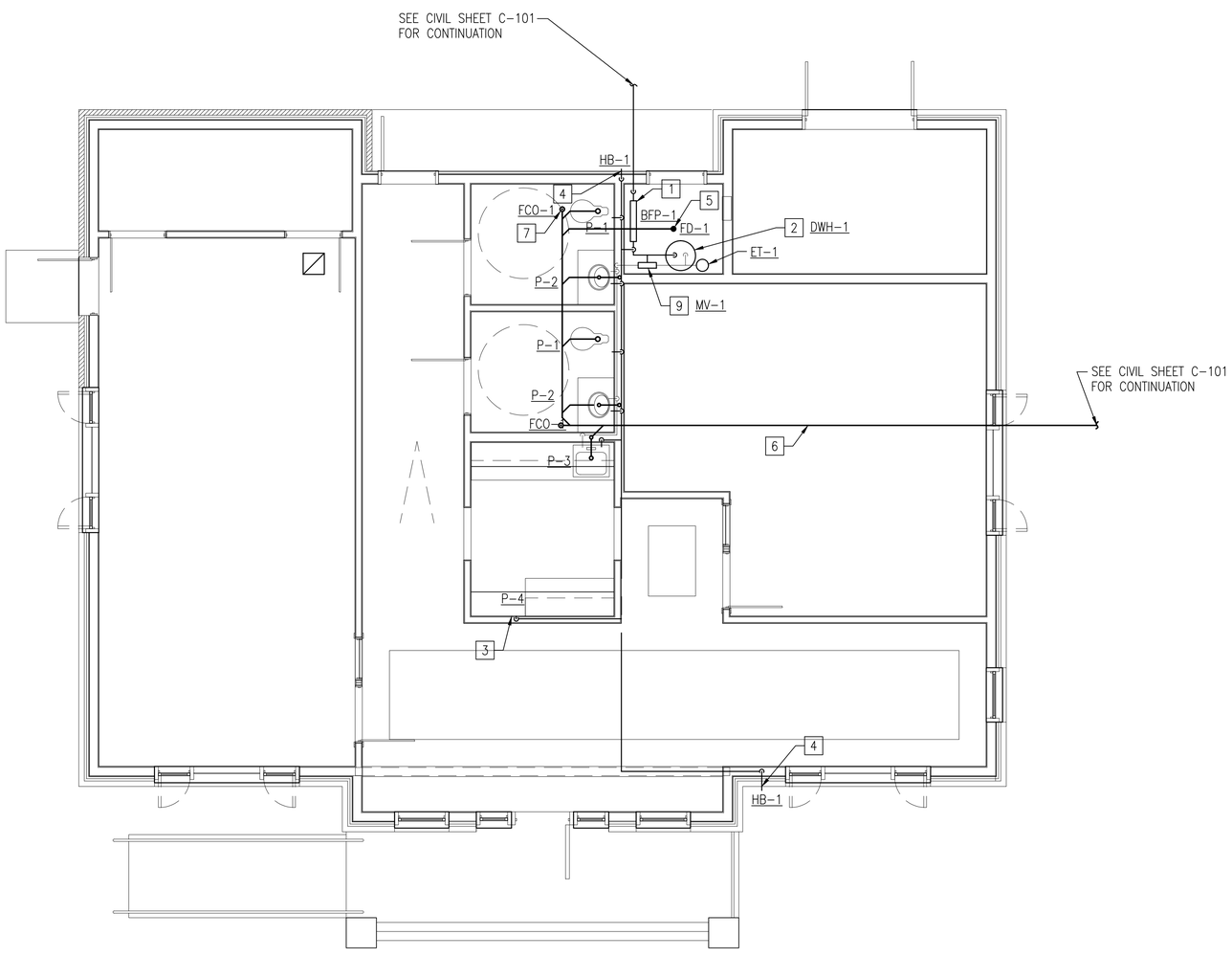

PLUMBING PLAN

SCALE: 1/4"=1'-0

PLAN NORTH

GENERAL SHEET NOTES

1. PROVIDE INSULATE ALL PIPING UNLESS OTHERWISE NOTED.
2. SEE DETAILS ON SHEETS P-501 FOR INSTALLATION OF FLOOR DRAINS, CLEANOUTS, WALL PIPE SLEEVES, AND PIPE BELOW SLAB.

NEW WORK KEYNOTES

1. SEE DETAIL C1 ON SHEET P-501.
2. SEE DETAIL A2 ON SHEET P-501.
3. SEE DETAIL B2 ON SHEET P-501.
4. SEE DETAIL B1 ON SHEET P-501.
5. SEE DETAIL A1 ON SHEET P-501.
6. SEE DETAIL A4 ON SHEET P-501.
7. SEE DETAIL C4 ON SHEET P-501.
8. SEE DETAIL C2 ON SHEET P-501.
9. SEE DETAIL B5 ON SHEET P-501.

GRAPHIC SCALE

1/4"=1'-0" 0' 2' 4' 8'

SYM	DESCRIPTION	DATE	APPR

NAVFAC

SEAL

A/E INFO

APPROVED

FOR COMMANDER NAVFAC

ACTIVITY

HERM RAWLINGS

SATISFACTORY TO DATE MM/DD/YY

DES DAV DRW DAV CHK TH

PM/DM JTL/APK

BRANCH MANAGER TLH TLD

CHIEF ENG/ARCH RLW RLW

FIRE PROTECTION SLW DPS

DEPARTMENT OF THE NAVY
NAVAL FACILITIES ENGINEERING COMMAND
HAMPTON ROADS IPT
NAVAL FACILITIES ENGINEERING COMMAND
NORFOLK, VA
SURFACE COMBAT SYSTEM CENTER
WALLOPS ISLAND, VA

HOUSING WELCOME CENTER

PLUMBING PLAN

SCALE: AS NOTED

EPROJECT NO.: 1366574

CONSTR. CONTR. NO.: #####-##-#-####

NAVFAC DRAWING NO. 12708226

SHEET 54 OF 70

P-101

DRAWFORM REVISION: 10 MARCH 2009

FILE NAME: P:\VA\Wallops Island\MILCON\2016_1366574_P238_DBB_HousingWelcomeCenter\B_Design\Drawings\Sheet Files\12_Plumbing\V238-1366574-P-101.dwg LAYOUT NAME: F-### PLOTTED: Monday, November 23, 2015 - 12:32pm USER: john.m.taylor1

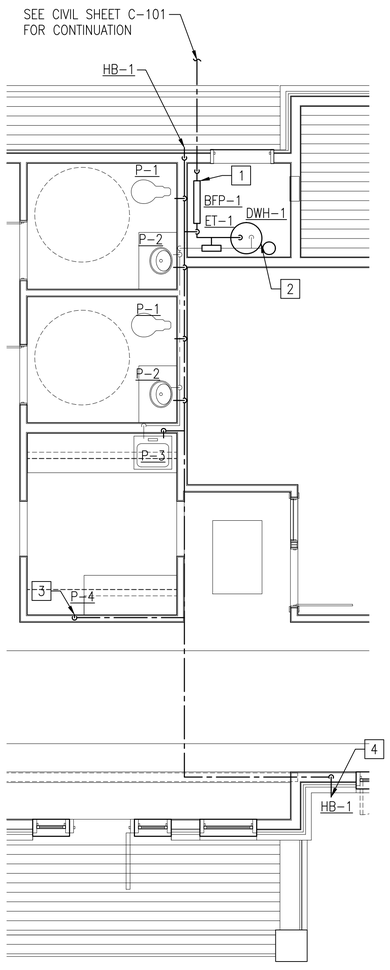

DOMESTIC WATER PLAN

SCALE: 1/4"=1'-0

PLAN NORTH

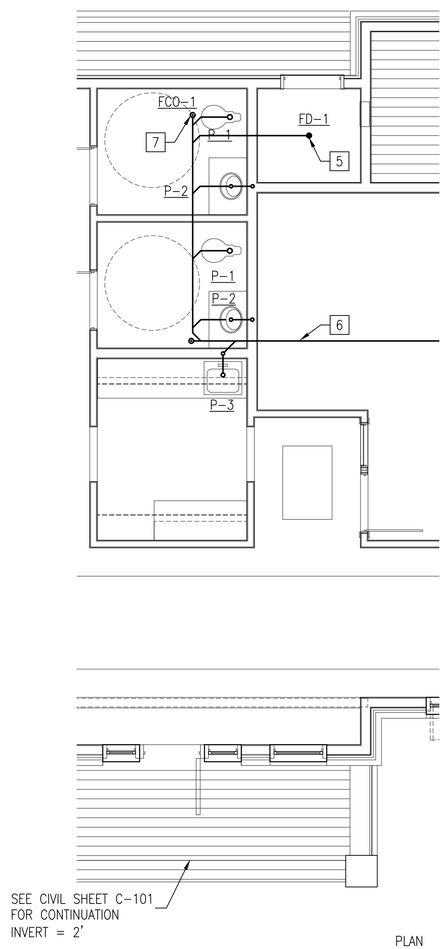

SANITARY PLAN

SCALE: 1/4"=1'-0

PLAN NORTH

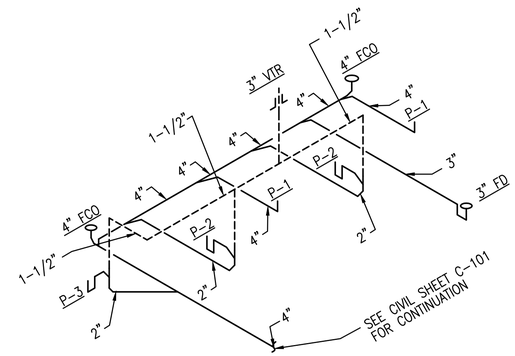

SANITARY ISOMETREIC

SCALE: NOT TO SCALE

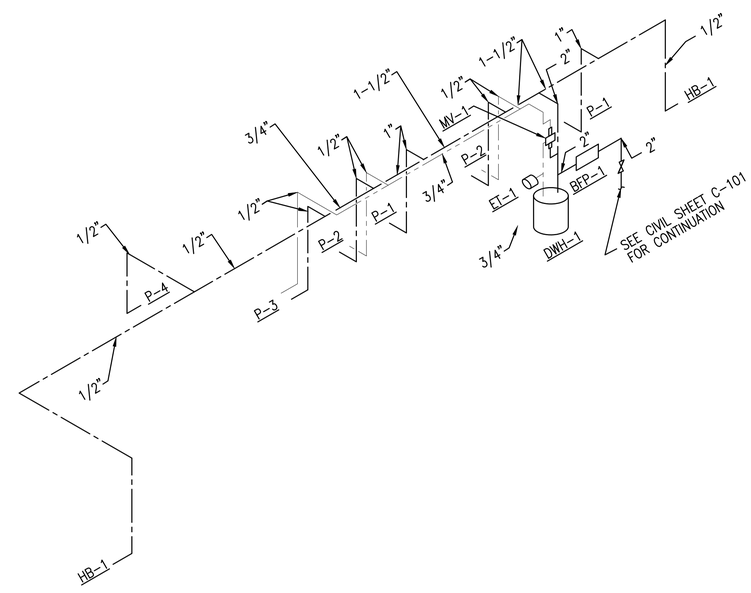

DOMESTIC WATER ISOMETRIC

SCALE: NOT TO SCALE

GENERAL SHEET NOTES

1. PROVIDE INSULATE ALL PIPING UNLESS OTHERWISE NOTED.
2. SEE DETAILS ON SHEETS P-501 FOR INSTALLATION OF FLOOR DRAINS, CLEANOUTS, WALL PIPE SLEEVES, AND PIPE BELOW SLAB.

NEW WORK KEYNOTES

1. SEE DETAIL C1 ON SHEET P-501.
2. SEE DETAIL A2 ON SHEET P-501.
3. SEE DETAIL B2 ON SHEET P-501.
4. SEE DETAIL B1 ON SHEET P-501.
5. SEE DETAIL A1 ON SHEET P-501.
6. SEE DETAIL A4 ON SHEET P-501.
7. SEE DETAIL C4 ON SHEET P-501.
8. SEE DETAIL C2 ON SHEET P-501.

GRAPHIC SCALE

1/4"=1'-0" 0' 2' 4' 8'

SYM	DESCRIPTION	DATE	APPR

NAVFAC

SEAL

A/E INFO

APPROVED

FOR COMMANDER NAVFAC

ACTIVITY: HERM RAWLINGS

SATISFACTORY TO DATE MM/DD/YY

DES DAV DRW DAV CHK TLH

PM/DM JTL/APK

BRANCH MANAGER TLH TLD

CHIEF ENG/ARCH RLW RLW

FIRE PROTECTION SCW DPS

DEPARTMENT OF THE NAVY
NAVAL FACILITIES ENGINEERING COMMAND
HAMPTON ROADS IPT
NAVAL FACILITIES ENGINEERING COMMAND
NORFOLK, VA
SURFACE COMBAT SYSTEM CENTER
WALLOPS ISLAND, VA

HOUSING WELCOME CENTER

PLUMBING PLAN AND ISOMETRICS

SCALE: AS NOTED

EPROJECT NO.: 1366574

CONSTR. CONTR. NO. #####-#-#-#-####

NAVFAC DRAWING NO. 12708227

SHEET 555 OF 70

P-102

DRAWFORM REVISION: 10 MARCH 2009

FILE NAME: P:\VA\Wallops Island\WLCON\2016_1366574_P238_DBB_JHousingWelcomeCenter\B_Design\Drawings\Sheet Files\12_Plumbing\P238-1366574-P-102.dwg LAYOUT NAME: #-### PLOTTED: Monday, November 23, 2015 - 12:33pm USER: john.m.taylor1

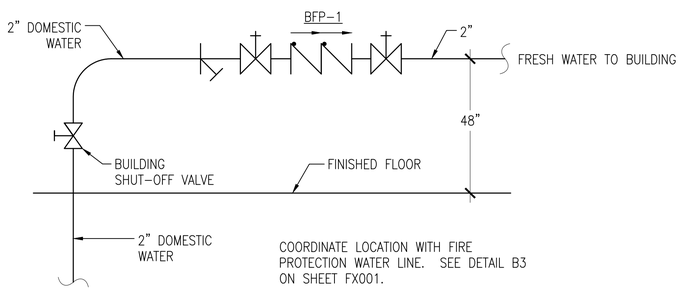

DOMESTIC WATER ENTRANCE PIPING DIAGRAM (C1)
NO SCALE — P-101

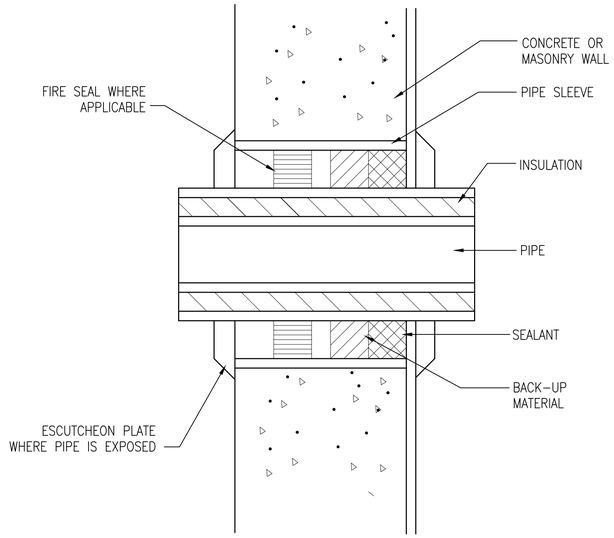

PIPE THRU WALL DETAIL (C3)
NO SCALE — P-101

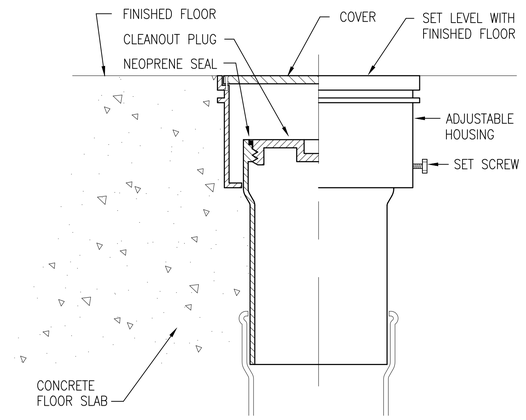

FLOOR CLEANOUT DETAIL (C4)
NO SCALE — P-101, P-102

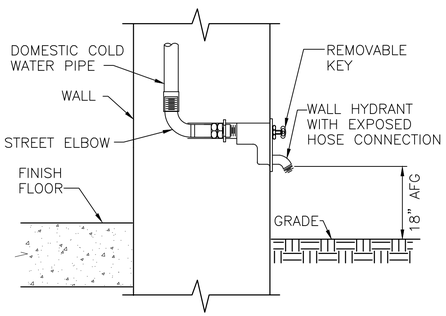

WALL HYDRANT DETAIL (EXPOSED TYPE) (B1)
NO SCALE — P-101, P102

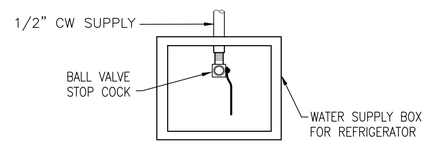

REFERIGERATOR HOOK UP (B2)
NO SCALE — P-101, P-102

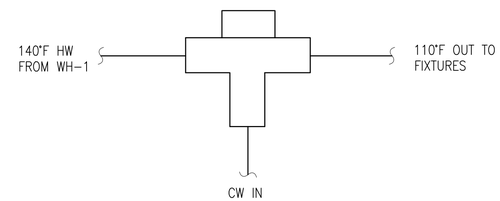

MIXING VALVE DETAIL (B4)
NO SCALE — P-101, P-102

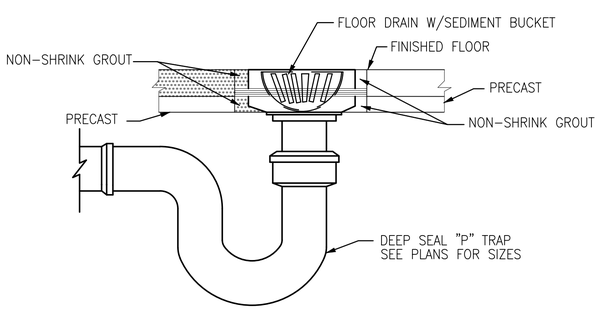

FLOOR DRAIN DETAIL (A1)
NO SCALE — P-101, P-102

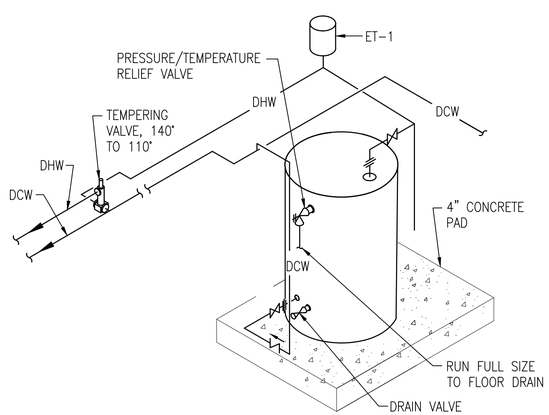

DOMESTIC HOT WATER DETAIL (A2)
NO SCALE — P-101,P-102

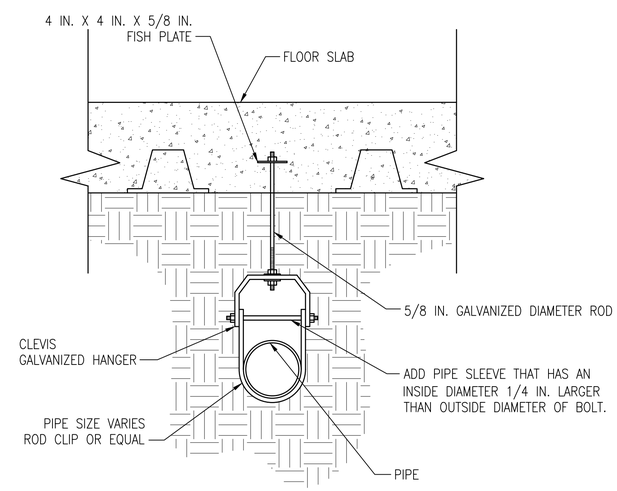

TYPICAL PIPE BELOW SLAB DETAIL (A4)
NO SCALE — P-101, P-102

SYM	DESCRIPTION	DATE	APPR

NAVFAC

SEAL

A/E INFO

APPROVED

FOR COMMANDER NAVFAC

ACTIVITY: HERM RAWLINGS

SATISFACTORY TO DATE MM/DD/YY

DES DAV | DRW DAV | CHK TLH

PM/DM JTL/APK

BRANCH MANAGER TLH TLD

CHIEF ENG/ARCH RLW RLW

FIRE PROTECTION SLW DPS

DEPARTMENT OF THE NAVY
NAVAL FACILITIES ENGINEERING COMMAND
NAVAL FACILITIES ENGINEERING COMMAND NORFOLK, VA
HAMPTON ROADS IPT
SURFACE COMBAT SYSTEM CENTER WALLOPS ISLAND, VA

HOUSING WELCOME CENTER

PLUMBING DETAILS

SCALE: AS NOTED

EPROJECT NO.: 1366574

CONSTR. CONTR. NO. ####-#-#-####

NAVFAC DRAWING NO. 12708228

SHEET 56 OF 70

P-501

DRAWFORM REVISION: 10 MARCH 2009

FILE NAME: P:\VA\Wallops Island\WLCON\2016_1366574_P238_DBB_HousingWelcomeCenter\B_Design\Drawings\Sheet Files\12_Plumbing\P238-1366574-P-501.dwg LAYOUT NAME: #### PLOTTED: Monday, November 23, 2015 - 12:34pm USER: john.m.taylor1

PLUMBING FIXTURE SCHEDULE

MARK	DESCRIPTION	H.W. (in)	C.W. (in)	WASTE (in)	TRAP (in)	REMARKS
P-1	WATER CLOSET, MANUAL FLUSH	–	1	4	–	1,2
P-2	LAVATORY, PUBLIC, FAUCET, COUNTER TOP	1/2	1/2	1-1/2	1-1/2	1,2
P-3	KITCHEN SINK, GOOSNECK FAUCET, COUNTER TOP	1/2	1/2	1-1/2	1-1/2	1
P-4	REFERIGERATOR ICE MAKER TAP	–	1/2	–	–	1
HB-1	WALL HYDRANT	–	1/2	–	–	1

NOTES:

1. INSTALL PER MANUFACTURER'S RECOMMENDATIONS.
2. HANDICAPPED ACCESSIBLE.

BACKFLOW PREVENTER SCHEDULE

MARK	SERVICE	LOCATION	TYPE	SIZE	MAXIMUM PD PSI AT GPM	REMARKS
BFP-1	CW SUPPLY	MECHANICAL ROOM	–	2"	13 @ 40	1

NOTES:

1. PROVIDE A REDUCED PRESSURE ZONE ASSEMBLY.

EXPANSION TANK SCHEDULE

MARK	TANK VOL. (GALS)	TYPE	AIR CHARGE (PSIG)	CONFIGURATION	APPROX. DIMEN. (DIA.X HGT)	LOCATION	REMARKS
ET-1	2.1	–	–	VERTICAL	8-1/4"X10-3/16"	MECH. ROOM	1

NOTES:

1. PROVIDE EXPANSION TANK WITH MANUFACTURER'S RECOMMENDED AIR CHARGE.

MIXING VALVE SCHEDULE

MARK	SERVICE	"TEMPERED" WATER TEMPERATURE (°F)	MIN. FLOW (GPM)	ALLOWABLE PD PSIG AT GPM	CW	HW	REMARKS
MV-1	HW HEATER	110	1/2	15/33	3/4"	3/4"	1

NOTES:

1. MIXING VALVE SHALL COOL 140°F ENTERING HW TO 110°F LEAVING WATER.

DOMESTIC WATER HEATER SCHEDULE

MARK	TANK VOLUME (GAL), MIN.	DCW INLET TEMP (°F)	WATER STORAGE TEMP (°F)	CAPACITY (W) INPUT	TYPE	ELECTRICAL VOLTS/ PHASE/ HZ/AMPS	ENERGY FACTOR MIN.	RECOVERY RATE CAPY, MIN. (GPH)	LOCATION	REMARKS
DWH-1	30	44	140	4500	ELECTRIC	240/1/30	0.95	21 @ 90°F	MECH. ROOM	1, 2

NOTES:

1. INSTALL PER MANUFACTURER'S RECOMMENDATIONS.
2. MIXING VALVE SHALL COOL 140°F ENTERING HW TO 110°F LEAVING WATER.

SYM	DESCRIPTION	DATE	APPR

NAVFAC

SEAL

A/E INFO

APPROVED

FOR COMMANDER NAVFAC

ACTIVITY

HERM RAWLINGS

SATISFACTORY TO DATE MM/DD/YY

DES DAV DRW DAV CHK TLH

PM/DM JTL/APK

BRANCH MANAGER TLH TLD

CHIEF ENG/ARCH RLW RLW

FIRE PROTECTION SLW DPS

DEPARTMENT OF THE NAVY
NAVAL FACILITIES ENGINEERING COMMAND
HAMPTON ROADS IPT
NAVAL FACILITIES ENGINEERING COMMAND
NORFOLK, VA
SURFACE COMBAT SYSTEM CENTER
WALLOPS ISLAND, VA

HOUSING WELCOME CENTER

PLUMBING SCHEDULES

SCALE: AS NOTED

EPROJECT NO.: 1366574

CONSTR. CONTR. NO.: #####-##-#-####

NAVFAC DRAWING NO. 12708229

SHEET 57 OF 70

P-601

DRAWFORM REVISION: 10 MARCH 2009

FILE NAME: P:\VA\Wallops Island\MILCON\2016_1366574_P238_DBB_HousingWelcomeCenter\B_Design\Drawings\Sheet Files\12_Plumbing\V238-1366574-P-601.dwg LAYOUT NAME: #-### PLOTTED: Monday, November 23, 2015 - 12:29pm USER: john.m.taylor1

MECHANICAL LEGEND

(T)	TEMPERATURE SENSOR
[T]	THERMOSTAT
(H)	HUMIDITY SENSOR
(A) 150	AIR TERMINAL TAG WITH AIR FLOW (CFM)
12/10	RECTANGULAR DUCT DIMENSIONS (INCHES)
12"ø	ROUND DUCT DIMENSION
	FLEXIBLE ROUND DUCT
	DOWNWARD DIRECTION OF SLOPED PIPING
	SUPPLY DUCT, SUPPLY DUCT DOWN/UP
	RETURN DUCT, RETURN DUCT DOWN/UP
	THIN LINE WEIGHT INDICATES EXISTING ITEM TO REMAIN
	HEAVY LINE WEIGHT INDICATES NEW WORK TO BE PROVIDED
	HEAVY DASHED LINE WEIGHT INDICATES EXISTING ITEM TO REMOVE, REFER TO DEMOLITION NOTES.

VERTICAL (WALL) FIRE DAMPER

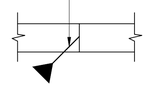

ACCESS DOOR

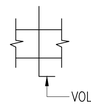

VOLUME DAMPER

ROOM NAME	SECTION SYMBOL
222	ROOM NUMBER
M	GAS METER
1	NEW WORK NOTE
	RADIUS ELBOW
	MITERED ELBOW WITH TURNING VANES
	DUCT CHANGE IN ELEVATION
MD	MOTORIZED DAMPER
	FLEXIBLE DUCT CONNECTOR
	RETURN GRILLE
	SUPPLY DIFFUSER
	DUCT BRANCH TAKE-OFF FITTING
	SPLASH BLOCK

DESIGN CONDITIONS

SPACE TYPE	COOLING		HEATING
	DB (°F)	WB (°F)	DB (°F)
OUTDOOR	91	76	21
MECHANICAL	HEATED ONLY		55
ALL OTHER AREAS	78	65	68

MECHANICAL ABBREVIATIONS

AD	ACCESS DOOR
AFF	ABOVE FINISHED FLOOR
AP	ACCESS PANEL
APD	AIR PRESSURE DROP
AHU	AIR HANDLING UNIT
BD	BALANCING DAMPER
BR	BASEBOARD RADIATOR
BTUH	BRITISH THERMAL UNIT PER HOUR
C	COMMON
Cv	LOSS COEFFICIENT
CU	CONDENSING UNIT
CW	CHILLED WATER
CFM	CUBIC FEET PER MINUTE
CLG	CEILING
CND	CONDENSER
COP	COEFFICENT OF PERFORMANCE
CRAHU	COMPUTER ROOM AIR HANDLING UNIT
DB	DRY BULB
DDC	DIRECT DIGITAL CONTROL
DEG	DEGREE
DX	DIRECT EXPANSION
EAT	ENTERING AIR TEMPERATURE
EB	ELECTRIC BASEBOARD HEATER
EER	ENERGY EFFICIENCY RATIO
EF	EXHAUST FAN
EFF	EFFICIENCY
ESP	EXTERNAL STATIC PRESSURE
EWT	ENTERING WATER TEMPERATURE
F	FAHRENHEIT
FCU	FAN COIL UNIT
FD	FIRE DAMPER
FT	FEET
FTWG	FEET OF WATER GAUGE
GPM	GALLONS PER MINUTE
HGT	HEIGHT
HP	HEAT PUMP, HORSEPOWER
HR	HOUR
HW	HOT WATER
HX	HEAT EXCHANGER
IAW	INCHES OF WATER GAUGE
IWG	IN ACCORDANCE WITH
kW	KILOWATT
LAT	LEAVING AIR TEMPERATURE
LBS	POUNDS
LV	LOUVER
LWT	LEAVING WATER TEMPERATURE
MAU	MAKEUP AIR UNIT
MAX	MAXIMUM
MIN	MINIMUM
NC	NOISE CRITERIA, NORMALLY CLOSED
NO	NUMBER, NORMALLY OPEN
OA	OUTSIDE AIR
OAU	OUTSIDE AIR UNIT
OU	OUTDOOR UNIT
PH	PHASE
PRS	PRESSURE REDUCING STATION
PSI	POUNDS PER SQUARE INCH
PTAC	PACKAGED TERMINAL AIR CONDITIONER
PTHP	PACKAGED TERMINAL HEAT PUMP
RA	RETURN AIR
RH	RELATIVE HUMIDITY
RL	REFRIGERANT LIQUID
RS	REFRIGERANT SUCTION
RTU	ROOFTOP UNIT
SA	SUPPLY AIR
SEER	SEASONAL ENERGY EFFICIENCY RATIO
SIM	SIMILAR
SP	STATIC PRESSURE
SQ	SQUARE
TYP	TYPICAL
UH	UNIT HEATER
UOI	UNLESS OTHERWISE INDICATED
V	VOLTS
VFD	VARIABLE FREQUENCY DRIVE
W	WIDTH
WB	WET BULB
WPD	WATER PRESSURE DROP
°	DEGREES
ø	DIAMETER

MECHANICAL SYMBOLS

◐	POINT OF DISCONNECTION
◕	POINT OF CONNECTION

GENERAL MECHANICAL NOTES

1. THESE GENERAL MECHANICAL NOTES APPLY TO THE ALL MECHANICAL DRAWINGS IN THIS SET. SHEET SPECIFIC NOTES ARE INDICATED ON EACH SHEET UNDER GENERAL SHEET NOTES.
2. PATCH ALL HOLES FROM REMOVAL OF PIPING, DUCTWORK, OR EQUIPMENT TO MATCH ADJACENT CONSTRUCTION.
3. PROVIDE ALL MATERIALS AND EQUIPMENT AND PERFORM ALL LABOR REQUIRED TO INSTALL COMPLETE AND OPERABLE MECHANICAL SYSTEMS AS INDICATED ON THE DRAWINGS, AS SPECIFIED AND AS REQUIRED BY CODE.
4. ENTIRE INSTALLATION, INCLUDING MATERIALS, EQUIPMENT, AND WORKMANSHIP, SHALL CONFORM WITH ALL APPLICABLE LAWS, CODES, AND REGULATIONS OF MUNICIPAL, STATE, AND FEDERAL AUTHORITIES, ALSO THE LATEST ADDITION OF THE STATE BUILDING CODES, APPLICABLE ASHRAE, NFPA, AND SMACNA STANDARDS AND OTHER REGULATORY BODIES HAVING JURISDICTION OVER THE CLASS OF WORK. WHERE APPLICABLE, MATERIALS AND EQUIPMENT SHALL HAVE STAMPS OR SEALS OF ARI, ASME, UL, OR ASTM. THE CONTRACTOR SHALL MAKE TESTS FOR ACCEPTANCE AND APPROVAL BY CODE AND THE REQUIREMENTS OF APPLICABLE REGULATORY AGENCIES. REQUIRED TESTS SHALL BE PERFORMED IN THE PRESENCE OF THE GOVERNMENT UNLESS OTHERWISE WAIVED IN WRITING.
5. INSTALL ALL MECHANICAL EQUIPMENT AND APPURTENANCES IN ACCORDANCE WITH MANUFACTURER'S RECOMMENDATIONS, THIS CONTRACT'S DOCUMENTS, AND APPLICABLE CODES AND REGULATIONS.
6. THE CONTRACTOR SHALL OBTAIN AND PAY FOR ALL PERMITS, LICENSES, DOCUMENTS, AND SERVICES RELATED TO INSTALLATION OF THE WORK.
7. THE CONTRACTOR SHALL COORDINATE HIS WORK WITH OTHER TRADES IN ORDER TO RESOLVE ANY CONFLICTS THAT MIGHT ARISE DUE TO THE LOCATION OF EQUIPMENT OR THE USE OF THE SPACE.
8. PROVIDE VIBRATION ISOLATORS FOR ALL MECHANICAL EQUIPMENT TO PREVENT TRANSMISSION OF VIBRATION TO BUILDING STRUCTURE.
9. PROVIDE ACCESS PANELS IN WALLS AND CEILINGS, WHERE REQUIRED, TO SERVE FIRE DAMPERS, VALVES, SMOKE DETECTORS, AND OTHER CONCEALED MECHANICAL EQUIPMENT THAT REQUIRES ROUTINE MAINTENANCE. ACCESS PANELS BE LARGE ENOUGH TO ALLOW PROPER CLEARANCE FOR ACCESS DOORS.
10. ALL OPENINGS IN FIRE WALLS DUE TO DUCTWORK, PIPING, CONDUIT, ETC., SHALL BE FIRE STOPPED.
11. LAYOUT OF PIPING AND DUCTWORK IS DIAGRAMMATIC. LOCATE ALL NEW HORIZONTAL DUCTWORK AND PIPING AS HIGH AS POSSIBLE AND ABOVE CEILINGS UNLESS OTHERWISE INDICATED. ALLOW FOR RISES, DROPS, AND OFFSETS AS REQUIRED.
12. SIZES GIVEN FOR DUCTWORK ON PLANS ARE INSIDE CLEAR DIMENSIONS.
13. ALL ELBOWS IN DUCTWORK SHALL BE RADIUS ELBOWS UNLESS OTHERWISE NOTED. WHERE SQUARE ELBOWS ARE SHOWN, INSTALL TURNING VANES. RADIUS ELBOWS SHALL HAVE A MINIMUM CENTERLINE RADIUS OF CURVATURE OF 1.5 TIMES DUCT WIDTH OR DIAMETER.
14. DO NOT INSTALL EQUIPMENT, PIPING OR DUCTWORK OVER ANY ELECTRICAL EQUIPMENT OR ELECTRICAL SERVICE SPACE.
15. PROVIDE ADJUSTING HANDLES FOR DUCT MOUNTED MANUAL VOLUME DAMPERS WITH RODS OF SUFFICIENT STAND-OFF LENGTH, SUCH THAT THE HANDLE DOES NOT COMPRESS THE INSULATION, OR DAMAGE THE INSULATION WHEN ADJUSTED.
16. PROVIDE PIPE SLEEVES FOR ALL PIPING PENETRATIONS THRU WALLS AND FLOORS. EACH PIPE SHALL BE SEPARATELY SLEEVED. PROVIDE CONTINUOUS SEALANT JOINT AROUND PIPE SLEEVE, BOTH SIDES OF WALL, WATERTIGHT.
17. PROVIDE P-TRAPS IN CONDENSATE DRAIN PIPING AT EACH AHU UNLESS THE AHU IS EQUIPPED WITH AN INTERNAL TRAP.
18. INSTALL THERMOSTATS AND SPACE TEMPERATURE SENSORS 60" ABOVE FINISHED FLOOR, AND MIN. 7" HORIZONTALLY FROM ADJACENT LIGHTING DIMMER SWITCHES, UNLESS OTHERWISE NOTED. COORDINATE LOCATIONS OF ALL THERMOSTATS AND SENSORS WITH ELECTRICAL AND INTERIOR DESIGN WORK.
19. INSTALL MECHANICAL EQUIPMENT TO FACILITATE SERVICING, MAINTENANCE, AND REPAIR OR REPLACEMENT OF EQUIPMENT COMPONENTS. AS MUCH AS PRACTICAL, CONNECT EQUIPMENT FOR EASE OF DISCONNECTING, WITH A MINIMUM OF INTERFERENCE WITH OTHER INSTALLATIONS. PIPING SHALL NOT INTERFERE WITH FILTER PULL, ACCESS PANELS, OR DOORS.
20. CONDENSATE DRAIN PIPING SHALL BE PVC. CLEANOUTS SHALL BE INSTALLED AT EACH CHANGE IN DIRECTION GREATER THAN 45 DEGREES. WHERE MORE THAN ONE CHANGE OF DIRECTION OCCURS IN A RUN OF PIPING, ONLY ONE CLEANOUT SHALL BE REQUIRED FOR EACH 40 FEET OF DEVELOPED LENGTH. COMBINATION WYE AND 1/8 BENDS SHALL BE USED IN LIEU OF TEES.
21. AFTER THE PIPING IS INSULATED, PROVIDE SETON BRAND OR EQUAL FACTORY-FABRICATED PIPE LABELS, WITH DIRECTION OF FLOW ARROWS, ON THE FOLLOWING PIPING, AT 10 FOOT ON CENTER ON THE PIPING MAINS AND 5 FOOT ON CENTER ON THE BRANCH RUNOUTS FROM MAINS.

SYM	DESCRIPTION	DATE	APPR

NAVFAC

SEAL

A/E INFO

APPROVED

FOR COMMANDER NAVFAC

ACTIVITY: HERM RAWLINGS

SATISFACTORY TO DATE MM/DD/YY

DES JMT DRW JMT CHK TLH

PM/DM JTL/APK

BRANCH MANAGER TLH TLD

CHIEF ENG/ARCH RLW RLW

FIRE PROTECTION SLW DPS

DEPARTMENT OF THE NAVY
NAVAL FACILITIES ENGINEERING COMMAND
NAVAL FACILITIES ENGINEERING COMMAND NORFOLK, VA
HAMPTON ROADS IPT
SURFACE COMBAT SYSTEM CENTER WALLOPS ISLAND, VA
HOUSING WELCOME CENTER
MECHANICAL LEGEND, ABBREVIATIONS & GENERAL NOTES

SCALE: NONE

EPROJECT NO.: 1366574

CONSTR. CONTR. NO. #####-##-#-####

NAVFAC DRAWING NO. 12708230

SHEET – OF 70

M-001

DRAWFORM REVISION: 10 MARCH 2009

FILE NAME: P:\VA\Wallops Island\WLCON\2016_1366574_P238_DBB_Housing\WelcomeCenter\B_Design\Drawings\Sheet Files\13_Mechanical\V238-1366574-M-001.dwg LAYOUT NAME: M-001 PLOTTED: Monday, November 23, 2015 - 12:42pm USER: john.m.taylor1
FILE NAME: P:\VA\Wallops Island\WLCON\2016_1366574_P238_DBB_Housing\WelcomeCenter\B_Design\Drawings\Sheet Files\13_Mechanical\V238-1366574-M-001.dwg LAYOUT NAME: M-001 PLOTTED: Monday, November 23, 2015 - 12:42pm USER: john.m.taylor1

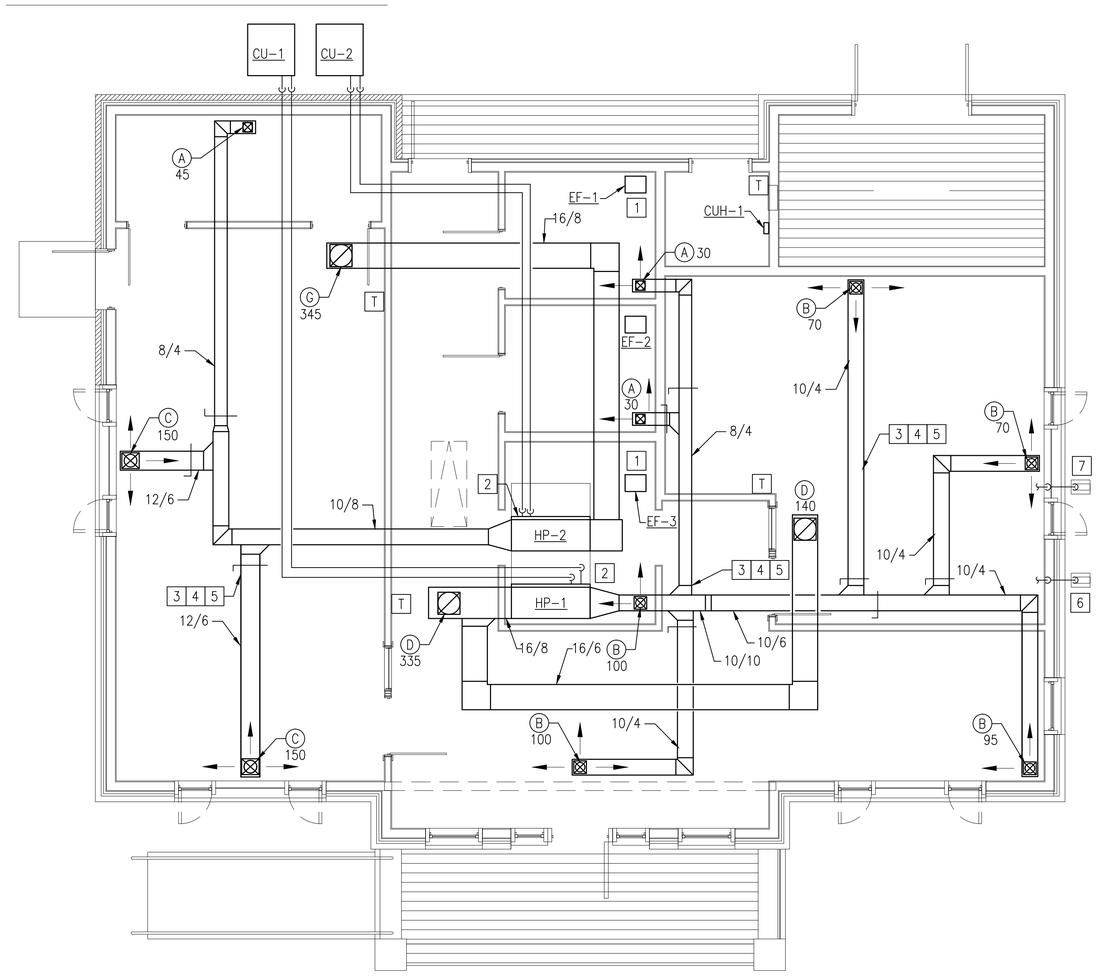

MECHANICAL DUCTWORK PLAN

SCALE: 1/4"=1'-0

PLAN NORTH

NEW WORK KEYNOTES

1. ROUTE EXHAUST DUCTWORK TO ROOF VENT. PROVIDE VENT CAP FOR EXHAUST DUCTWORK. TYPICAL FOR ALL EXHAUST FANS.
2. PROVIDE CONDENSATE DRAIN LINE. SEE DETAIL A4 ON SHEET M-501.
3. SEE DETAIL B4 ON SHEET M-501. TYPICAL FOR ALL DUCTWORK BRANCH TAKE-OFFS.
4. SEE DETAIL D3 ON SHEET M-501.
5. SEE DETAIL D4 ON SHEET M-501.
6. ROUTE HP-1 CONDENSATE TO SPLASH BLOCK AT GRADE.
7. ROUTE HP-2 CONDENSATE TO SPLASH BLOCK AT GRADE.

GRAPHIC SCALE

1/4"=1'-0" 0' 2' 4' 8'

SYM	DESCRIPTION	DATE	APPR

NAVFAC

SEAL

A/E INFO

APPROVED

FOR COMMANDER NAVFAC

ACTIVITY: HERM RAWLINGS

SATISFACTORY TO DATE MM/DD/YY

DES JMT DRW JMT CHK TLH

PM/DM JTL/APK

BRANCH MANAGER TLH TLD

CHIEF ENG/ARCH RLW RLW

FIRE PROTECTION SLW DPS

DEPARTMENT OF THE NAVY
NAVAL FACILITIES ENGINEERING COMMAND
HAMPTON ROADS IPT
NAVAL FACILITIES ENGINEERING COMMAND
NORFOLK, VA
SURFACE COMBAT SYSTEM CENTER
WALLOPS ISLAND, VA

HOUSING WELCOME CENTER

MECHANICAL DUCTWORK PLAN

SCALE: AS NOTED

EPROJECT NO.: 1366574

CONSTR. CONTR. NO.: ####-##-#-####

NAVFAC DRAWING NO. 12708231

SHEET ## OF 70

M-101

DRAWFORM REVISION: 10 MARCH 2009

FILE NAME: P:\VA\Wallops Island\MILCON\2016_1366574_P238_DBB_HousingWelcomeCenter\B_Design\Drawings\Sheet Files\13_Mechanical\H238-1366574-M-101.dwg LAYOUT NAME: #### PLOTTED: Monday, November 23, 2015 - 12:43pm USER: john.m.taylor1

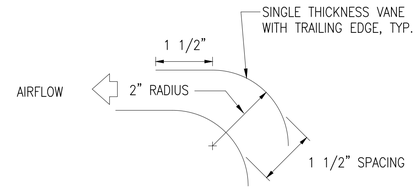

NOTE: PROVIDE TURNING VANES ACROSS THE FULL WIDTH OF THE MITERED ELBOWS.

DUCT MITERED ELBOW - TURNING VANES DETAIL (D3)

NO SCALE — M-101

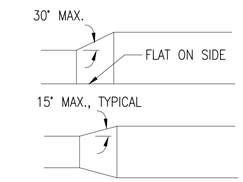

DUCT TRANSITIONS DETAIL (D4)

NO SCALE — M-101

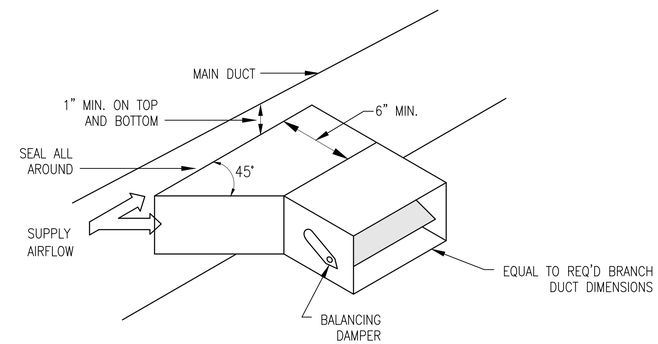

LOW-PRESSURE DUCT BRANCH TAKE-OFF FITTING DETAIL (B4)

NO SCALE — M-101

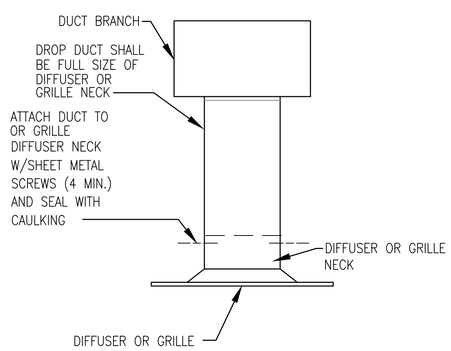

DUCT TO DIFFUSER/GRILLE CONNECTION DETAIL (A1)

NO SCALE — M-101

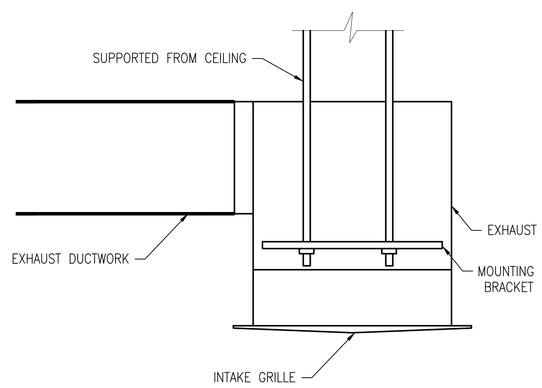

CEILING MOUNTED EXHAUST FAN DETAIL (A2)

NO SCALE — M-101

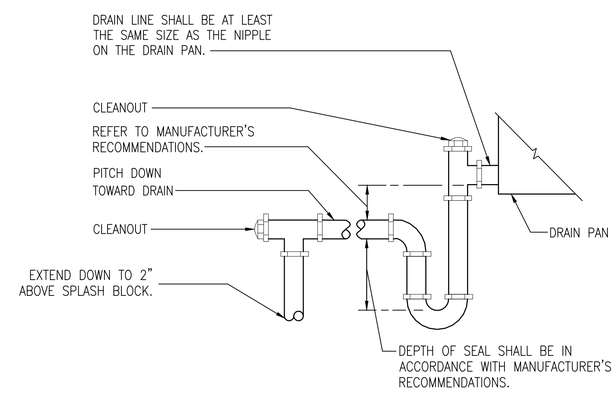

AIR HANDLING UNIT CONDENSATE P-TRAP DETAIL (A4)

NO SCALE — M-101

SYM	DESCRIPTION	DATE	APPR

SEAL

A/E INFO

APPROVED

FOR COMMANDER NAVFAC

ACTIVITY: HERM RAWLINGS

SATISFACTORY TO DATE MM/DD/YY

DES JMT DRW JMT CHK TLH

PM/DM JTL/APK

BRANCH MANAGER TLH TLD

CHIEF ENG/ARCH RLW RLW

FIRE PROTECTION SLW DPS

DEPARTMENT OF THE NAVY
NAVAL FACILITIES ENGINEERING COMMAND
HAMPTON ROADS IPT
NAVAL FACILITIES ENGINEERING COMMAND
NORFOLK, VA
SURFACE COMBAT SYSTEM CENTER
WALLOPS ISLAND, VA

HOUSING WELCOME CENTER

MECHANICAL DETAILS

SCALE: AS NOTED

EPROJECT NO.: 1366574

CONSTR. CONTR. NO.: #####-##-#-####

NAVFAC DRAWING NO.: 12708232

SHEET ## OF 70

M-501

DRAWFORM REVISION: 10 MARCH 2009

FILE NAME: P:\VA\Wallops Island\MILCON\2016_1366574_P238_DBB_HousingWelcomeCenter\B_Design\Drawings\Sheet Files\13_Mechanical\V238-1366574-M-501.dwg LAYOUT NAME: #-### PLOTTED: Monday, November 23, 2015 - 12:44pm USER: john.m.taylor1

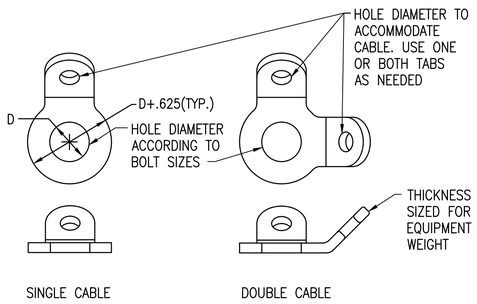

ATFP BRACING CONNECTOR DETAIL (C1)

NO SCALE — M-101

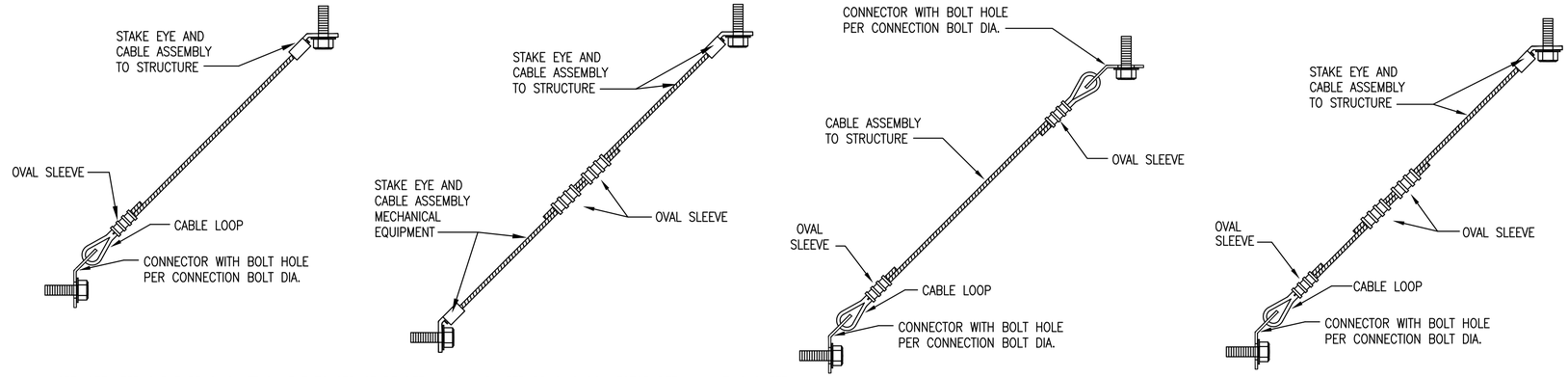

NOTE: SEE ATFP CABLE BRACING ATTACHMENT TO STRUCTURE DETAIL B1, AND ATFP BRACING CONNECTOR DETAIL A1, THIS SHEET.

ATFP CABLE BRACING ASSEMBLY DETAIL (C2)

NO SCALE — M-101

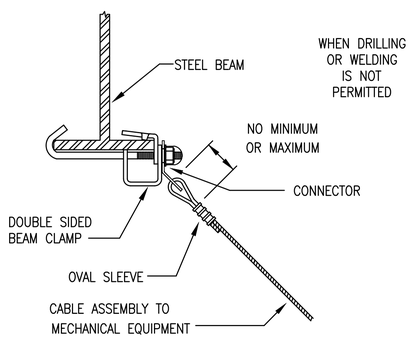

ATFP CABLE BRACING ATTACHMENT TO STRUCTURE DETAIL (B1)

NO SCALE — M-101

SYM	DESCRIPTION	DATE	APPR

SEAL

A/E INFO

APPROVED

FOR COMMANDER NAVFAC

ACTIVITY: HERM RAWLINGS

SATISFACTORY TO DATE MM/DD/YY

DES JMT DRW JMT CHK TLH

PM/DM JTL/APK

BRANCH MANAGER TLH TLD

CHIEF ENG/ARCH RLW RLW

FIRE PROTECTION SLW DPS

DEPARTMENT OF THE NAVY
NAVAL FACILITIES ENGINEERING COMMAND
HAMPTON ROADS IPT
NAVAL FACILITIES ENGINEERING COMMAND NORFOLK, VA
SURFACE COMBAT SYSTEM CENTER WALLOPS ISLAND, VA

HOUSING WELCOME CENTER

MECHANICAL DETAILS

SCALE: AS NOTED

EPROJECT NO.: 1366574

CONSTR. CONTR. NO.: #####-##-#-####

NAVFAC DRAWING NO.: 12708233

SHEET ## OF 70

M-502

DRAWFORM REVISION: 10 MARCH 2009

FILE NAME: P:\VA\Wallops Island\MILCON\2016_1366574_P238_DBB_HousingWelcomeCenter\B_Design\Drawings\Sheet Files\13_Mechanical\V238-1366574-M-502.dwg LAYOUT NAME: #-### PLOTTED: Monday, November 23, 2015 - 12:44pm USER: john.m.taylor1

DX SPLIT SYSTEM AIR COOLED HEAT PUMP SCHEDULE

MARK	LOCATION	TYPE	AIRFLOW (CFM)	ESP (IN. WG)	COOLING CAPACITY				HEATING CAPACITY				SPLIT SYSTEM OUTDOOR UNIT		ELECTRICAL DATA		
					NOMINAL SIZE (MBH)	ENTERING AIR (°F)		MIN SEER	NOMINAL SIZE (MBH)	ENTERING AIR (°F)	MIN HPSF	BACKUP HEAT (kW)	MARK	CAPACITY	VOLTAGE	PHASE	MCA
						DB	WB			DB							
HP-1	ATTIC	HORIZONTAL	475	0.5	24	78	65	13	24	68	7.7	10	CU-1	MATCH INDOOR UNIT	240	1	14.7
HP-2	ATTIC	HORIZONTAL	345	0.5	18	78	65	13	18	68	7.7	8	CU-2	MATCH INDOOR UNIT	240	1	12.4

NOTES:
1. PROVIDE WITH PROGRAMMABLE THERMOSTAT.
2. CONDENSING UNIT PERFORMANCE BASED ON 95°FDB OUTDOOR TEMPERATURE.
3. PROVIDE WITH COMBINATION MOTOR STARTER/DISCONNECT. INDOOR UNIT IS POWERED FROM OUTDOOR UNIT.

FAN SCHEDULE

MARK	TYPE	AIRFLOW (CFM)	ESP (IN WG)	RPM	SONES	DRIVE	ELECTRICAL DATA		
							HP	VOLTAGE	PHASE
EF-1	CEILING MOUNTED	50	0.3	900	1.2	DIRECT	1/12	120	1
EF-2	CEILING MOUNTED	50	0.3	900	1.2	DIRECT	1/12	120	1
EF-3	CEILING MOUNTED	50	0.3	900	1.2	DIRECT	1/12	120	1

NOTES:
1. CONTROLLED BY WALL SWITCH.
2. PROVIDE WITH BACKDRAFT DAMPER.

ELECTRIC UNIT HEATER SCHEDULE

MARK	LOCATION	TYPE	AIRFLOW (CFM)	ELECTRICAL DATA		
				VOLTAGE	PHASE	kW
CUH-1	MECHANICAL RM	WALL MOUNT FAN FORCED	40	240	1	1

NOTES:
1. PROVIDE WITH INTEGRAL DISCONNECT.
2. PROVIDE WITH TAMPERPROOF THERMOSTAT.
3. PROVIDE WITH SURFACE MOUNTING KIT.

DUCT CONSTRUCTION AND LEAK TEST SCHEDULE

MARK	DUCT PRESSURE CLASS (IN. WG)				SUPPLY RECTANGULAR		RETURN/EXHAUST/ OUTSIDE AIR		DUCT TEST PRESSURE (IN. WG)
	SUPPLY DUCT	RETURN DUCT	EXHAUST DUCT	OA DUCT	SEAL CLASS	LEAK CLASS	SEAL CLASS	LEAK CLASS	
HP-1,2	1	-	-	-	A	24	-	-	1
	-	-0.5	-	-	-	-	A	24	0.5
EF-1,2,3	-	-	-1	-	-	-	A	24	1

NOTES:
1. TEST IN ACCORDANCE WITH HVAC TESTING/ADJUSTING/BALACING SPECIFICATIONS AND THE PROCESURES IN SMACNA HVAC AIR DUCT LEAKAGE TEST MANUAL, 1985 EDITION.

GRILLE, REGISTER, AND DIFFUSER SCHEDULE

MARK	SERVICE	CFM RANGE	MAX SP (IN WG)	NECK/COLLAR SIZE (IN)	MOUNTING/TYPE	MAX. THROW AT 50 FPM (FT)	MAX NC	NOTES
A	SUPPLY	0-65	0.02	6 X 6	SURFACE MOUNT RESIDENTIAL	6	10	1,2
B	SUPPLY	66-120	0.04	8 X 8	SURFACE MOUNT RESIDENTIAL	8	11	1,2
C	SUPPLY	121-185	0.05	10 X 10	SURFACE MOUNT RESIDENTIAL	-	14	1,2
D	RETURN	0-475	0.01	14 X 14	SURFACE MOUNT RESIDENTIAL	-	17	2,3

NOTES:
1. PATTERN: 4-WAY CORE STYLE UNLESS OTHERWISE INDICATED ON DRAWINGS.
2. ALL ALUMINUM CONSTRUCTION.
3. FILTER GRILLE WITH 1" THICK FILTER.

SYM	DESCRIPTION	DATE	APPR

NAVFAC

SEAL

A/E INFO

APPROVED

FOR COMMANDER NAVFAC

ACTIVITY: HERM RAWLINGS

SATISFACTORY TO DATE: MM/DD/YY

DES: JMT DRW: JMT CHK: TLH

PM/DM: JTL/APK

BRANCH MANAGER: TLH TLD

CHIEF ENG/ARCH: RLW RLW

FIRE PROTECTION: SCW DPS

DEPARTMENT OF THE NAVY
NAVAL FACILITIES ENGINEERING COMMAND
HAMPTON ROADS IPT
NAVAL FACILITIES ENGINEERING COMMAND
NORFOLK, VA
SURFACE COMBAT SYSTEM CENTER
WALLOPS ISLAND, VA
HOUSING WELCOME CENTER
MECHANICAL SCHEDULE

SCALE: AS NOTED

EPROJECT NO.: 1366574

CONSTR. CONTR. NO.: #####-##-#-####

NAVFAC DRAWING NO. 12708234

SHEET ## OF 70

M-601

DRAWFORM REVISION: 10 MARCH 2009

FILE NAME: P:\VA\Wallops Island\MILCON\2016_1366574_P238_DBB_HousingWelcomeCenter\B_Design\Drawings\Sheet Files\13_Mechanical\H238-1366574-M-601.dwg LAYOUT NAME: #-### PLOTTED: Monday, November 23, 2015 - 12:45pm USER: john.m.taylor1

EXHAUST FAN CONTROL DIAGRAM (TYP.)

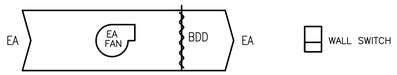

SEQUENCE OF OPERATION

EXHAUST FANS (EF-1,2,3)

EXHAUST FAN OPERATION: THE EXHAUST FAN SHALL START AND STOP BASED ON MANUALLY OPERATED WALL SWITCH.

CABINET UNIT HEATER CONTROL DIAGRAM (TYP.) (NON-DDC)

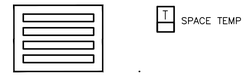

SEQUENCE OF OPERATION

CABINET UNIT HEATER (CUH-1)

HEATING OPERATION: THE CABINET UNIT HEATER IN THE MECHANICAL ROOM SHALL OPERATE AT A SETPOINT OF 55°F (ADJUSTABLE). THE HEATER WILL BE CONTROLLED FROM A MANUFACTURER PROVIDED UNIT-MOUNTED THERMOSTAT.

DX SPLIT-SYSTEM HEAT PUMP CONTROL DIAGRAM (TYP.)

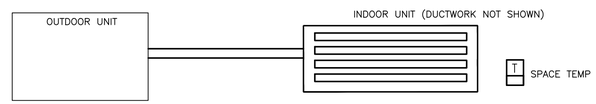

SEQUENCE OF OPERATION

DUCTLESS SPLIT-SYSTEM HEAT PUMP (HP-1, 2 & CU-1, 2)

THE SPLIT-SYSTEM HEAT PUMP WILL BE CONTROLLED FROM A MANUFACTURER'S WALL-MOUNTED PROGRAMMABLE THERMOSTAT. SPACE TEMPERATURE SETPOINT SHALL BE 68°F (ADJUSTABLE) FOR HEATING AND 78°F (ADJUSTABLE) FOR COOLING.

GENERAL SHEET NOTES

1. DDC CONTROLS ARE NOT APPLICABLE TO THIS PROJECT. THIS SHEET IS FOR CONVENTIONAL CONTROL SEQUENCE ONLY.

CONTROL LEGEND

- T — SPACE TEMPERATURE SENSOR
- RELAY
- DAMPER ACTUATOR (ELECTRIC ACTUATOR)
- BACK DRAFT DAMPER

CONTROL ABBREVIATIONS

DISCH.	DISCHARGE
DX	DIRECT EXPANSION COOLING COIL
EA	EXHAUST AIR
ELEC.	ELECTRICAL
LVG	LEAVING AIR
NC	NORMALLY CLOSED
OA	OUTSIDE AIR
RA	RETURN AIR
SA	SUPPLY AIR
TEMP	TEMPERATURE

SYM	DESCRIPTION	DATE	APPR

NAVFAC

SEAL

A/E INFO

APPROVED

FOR COMMANDER NAVFAC

ACTIVITY: HERM RAWLINGS

SATISFACTORY TO DATE MM/DD/YY

DES JMT DRW JMT CHK TLH

PM/DM JTL/APK

BRANCH MANAGER TLH TLD

CHIEF ENG/ARCH RLW RLW

FIRE PROTECTION SLW DPS

DEPARTMENT OF THE NAVY
NAVAL FACILITIES ENGINEERING COMMAND
NAVAL FACILITIES ENGINEERING COMMAND NORFOLK, VA
HAMPTON ROADS IPT
SURFACE COMBAT SYSTEM CENTER WALLOPS ISLAND, VA

HOUSING WELCOME CENTER

CONTROLS

SCALE: AS NOTED

EPROJECT NO.: 1366574

CONSTR. CONTR. NO.: #####-##-#-####

NAVFAC DRAWING NO. 12708235

SHEET ## OF 70

M-701

DRAWFORM REVISION: 10 MARCH 2009

FILE NAME: P:\VA\Wallops Island\MILCON\2016_1366574_P238_DBB_HousingWelcomeCenter\B_Design\Drawings\Sheet Files\13_Mechanical\V238-1366574-M-701.dwg LAYOUT NAME: #-### PLOTTED: Monday, November 23, 2015 - 12:46pm USER: john.m.taylor1

INTERIOR ELECTRICAL LEGEND

1. — GENERAL NOTE TAG – REFER TO "GENERAL NOTES THIS SHEET" FOR EACH SHEET

1 — NEW WORK NOTE TAG – REFER TO "NEW WORK NOTES – THIS SHEET" FOR EACH SHEET

A — LIGHTING FIXTURE TYPE. SEE LIGHTING FIXTURE SCHEDULE.

LED LIGHTING FIXTURE.

RECESSED DOWNLIGHT FIXTURE.

WALL-MOUNTED LIGHTING FIXTURE.

WALL-MOUNTED EXIT LIGHTING FIXTURE.

EXIT LIGHTING FIXTURE, CEILING-MOUNTED. ARROW, WHEN USED, INDICATES DIRECTION.

EMERGENCY, BATTERY POWERED LIGHTING FIXTURE.

S — TOGGLE SWITCH, SINGLE POLE, UON

ELECTRICAL PANELBOARD (240/120V).

J — JUNCTION BOX.

M 5 — MOTOR CONNECTION, HP AS INDICATED.

3P 30/20 — DISCONNECT SWITCH. IN NEMA 3R ENCL. UON. 3P = # OF POLES, 30 = SWITCH RATING 20 = FUSE RATING (NF INDICATES NON-FUSIBLE).

DUPLEX CONVENIENCE RECEPTACLE. 20A., 125V. MOUNT 18" AFF UON. GFI = GROUND FAULT PROTECTION. WP = WEATHER PROOF.

QUADRUPLEX CONVENIENCE RECEPTACLE. 20A., 125V. MOUNT 18" AFF UON.

E — EQUIPMENT CONNECTION AS NOTED.

A-1,2,3 — HOMERUNS TO PANEL. PANEL & CIRCUIT DESIGNATIONS AS INDICATED.

OR — BRANCH CIRCUIT OR FEEDER WIRING IN CONDUIT. NO TICK MARKS INDICATE 2-#12 CONDUCTORS & 1-#12 GND. IN 1/2" CONDUIT UON. TICK MARKS, WHEN SHOWN, INDICATE NUMBER OF #12 CONDUCTORS IF OTHER THAN THREE ; (1) INDICATES GROUND. CONDUIT LARGER THAN 1/2" & WIRE LARGER THAN #12 SHALL BE AS INDICATED.

INDICATES A CONDUIT RUN CONCEALED IN CEILING, WALL, FLOOR, OR ABOVE SUSPENDED CEILING UON.

TELECOMMUNICATIONS OUTLET, MOUNT 18" AFF UON.

TELEVISION OUTLET, MOUNT 18"AFF UON.

AV — AV OUTLET 4 GANG, MOUNT 18" AFF UON.

TELECOMMUNICATIONS BACKBOARD.

MANHOLE/HANDHOLE, TYPE AS NOTED

EXISTING MANHOLE/HANDHOLE, TYPE AS NOTED

PADMOUNT TRANSFORMER. SIZE AS INDICATED. FILLED RECTANGLE INDICATES FRONT.

PADMOUNT TRANSFORMER. EXISTING. SIZE AS INDICATED. UNFILLED LOWER RECTANGLE INDICATES FRONT.

EXISTING TELECOMMUNICATIONS PEDESTAL.

EXISTING AREA/STREET LIGHTING POLE WITH EXISTING LUMINAIRE.

AREA/STREET LIGHTING POLE WITH LUMINAIRE. REFER TO LIGHTING. FIXTURE SCHEDULE AND APPLICABLE FIXTURE AND POLE DETAILS.

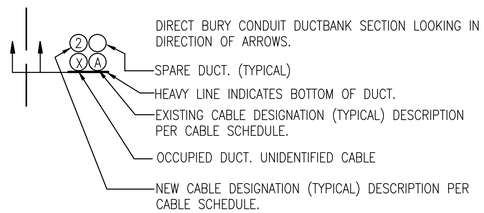

GENERAL NOTES

1. ELECTRICAL EQUIPMENT SHALL BE IDENTIFIED AND LABELED. ALL FEEDERS/CIRCUITS SHALL BE IDENTIFIED AT EACH END OF THE WIRE AND AT EVERY SPLICE OR JUNCTION/PULL BOX.
2. DRAWINGS ARE BASED ON EXISTING BUILDING PLANS AND FIELD INVESTIGATIONS.CONTRACTOR SHALL VISIT THE EXISTING BUILDING AND ACQUAINT HIMSELF/HERSELF WITH THE EXISTING FIELD CONDITIONS. CONTRACTOR SHALL EXAMINE ALL DRAWINGS TO AVOID CONFLICT.
3. ARC FLASH TAGS SHALL BE USED ON ALL EQUIPMENT AND SHALL BE SIMILAR TO DETAIL AF-1, SHEET E-601.

ABBREVIATIONS

1/C	ONE CONDUCTOR
AFF	ABOVE FINISHED FLOOR
AFG	ABOVE FINISHED GRADE
BKR	BREAKER
C	CONDUIT
CATV	COMMUNITY ANTENNA TV (CABLE TV)
CB	CIRCUIT BREAKER
CKT	CIRCUIT
DWG	DRAWING
EA	EACH
EC	EMPTY CONDUIT
ELEC	ELECTRICAL
ENCL	ENCLOSURE
EQUIP	EQUIPMENT
EWC	ELECTRIC WATER COOLER
EWH	ELECTRIC WATER HEATER
EUH	ELECTRIC UNIT HEATER
EXT	EXTERIOR
FT	FEET
GFI	GROUND FAULT CIRCUIT INTERRUPTER
GND	GROUND
HH	HANDHOLE
LTS	LIGHTS
MCB	MAIN CIRCUIT BREAKER
MDP	MAIN DISTRIBUTION PANEL
MECH	MECHANICAL
MH	MANHOLE
MTD	MOUNTED
MTG HT	MOUNTING HEIGHT
NA	NOT APPLICABLE
NEC	NATIONAL ELECTRICAL CODE
NTS	NOT TO SCALE
PNL	PANEL
PNLBD	PANELBOARD
PVC	POLYVINYL CHLORIDE CONDUIT
REC	RECEPTACLE
RM	ROOM
SHT	SHEET
TV	TELEVISION
TYP	TYPICAL
UG	UNDERGROUND
UON	UNLESS OTHERWISE NOTED
W	WIRE
WP	WEATHERPROOF
XFMR	TRANSFORMER

SYM	DESCRIPTION	DATE	APPR

NAVFAC

SEAL

A/E INFO

APPROVED

FOR COMMANDER NAVFAC

ACTIVITY: HERM RAWLINGS

SATISFACTORY TO DATE MM/DD/YY

DES MDM DRW MDM CHK KDL

PM/DM JTL/APK

BRANCH MANAGER KDL

CHIEF ENG/ARCH RLW

FIRE PROTECTION DPS

DEPARTMENT OF THE NAVY
NAVAL FACILITIES ENGINEERING COMMAND
HAMPTON ROADS IPT
NAVAL FACILITIES ENGINEERING COMMAND NORFOLK, VA
SURFACE COMBAT SYSTEM CENTER WALLOPS ISLAND, VA

HOUSING WELCOME CENTER

LEGENDS, NOTES, AND ABBREVIATIONS

SCALE: AS NOTED

EPROJECT NO.: 1366574

CONSTR. CONTR. NO.

NAVFAC DRAWING NO. 12708236

SHEET 64 OF 70

E-001

DRAWFORM REVISION: 10 MARCH 2009

FILE NAME: P:\VA\Wallops Island\MILCON\2016_1366574_P238_DBB_HousingWelcomeCenter\B_Design\Drawings\Sheet Files\14_Electrical\V238-1366574-E-001.dwg LAYOUT NAME: E-001 PLOTTED: Thursday, December 03, 2015 - 11:48am USER: mason.munroe

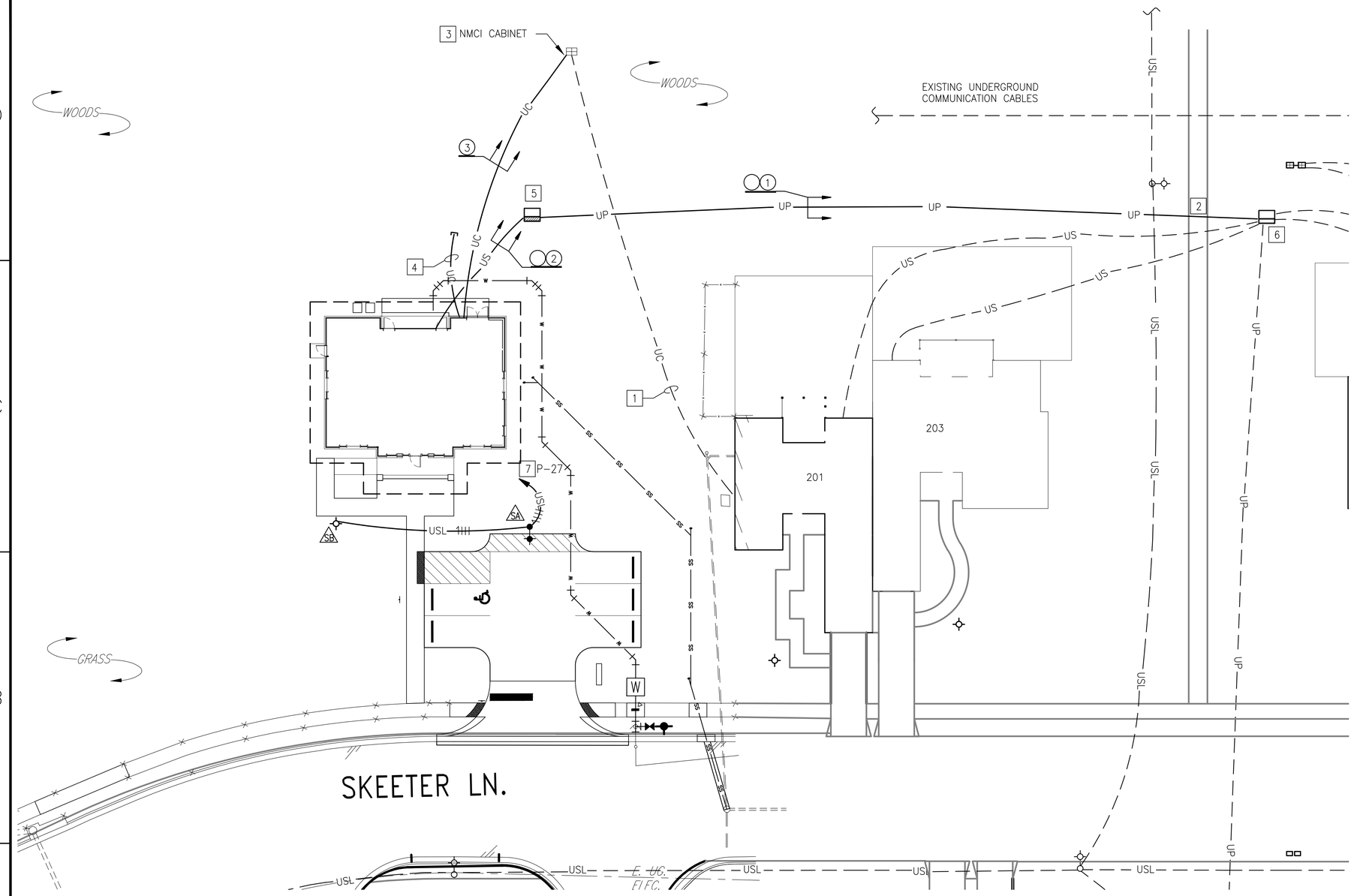

ELECTRICAL SITE PLAN

SCALE: 1/16" = 1'-0"

PLAN NORTH

UNDERGROUND CABLE/DUCT SCHEDULE			
MARK	CABLE SIZE OR TYPE	DUCT SIZE	REMARKS
1	1-1/C, CU #2 15KV EPR 133%, TAPE SHIELD, 1-1/C, CU #2 600V THW NEUTRAL AND GROUND.	5"	1, 2, 3
2	3-1/C, CU #4/0 600V USE, 1#4/0 GND	3"	1, 3
3	6 STRAND FIBER FOR NMCI	3"	3

REMARKS:

1. BURY 36" BFG TO TOP MINIMUM.
2. PULL NEW CIRCUIT COMPLETE FROM EXISTING PAD MOUNTED TRANSFORMER
3. PROVIDE PULL WIRE OR TAPE IN ALL UNUSED DUCTS.

GENERAL SHEET NOTES

1. ALL WORK INDICATED IS NEW WORK UNLESS SPECIFICALLY INDICATED OTHERWISE.
2. ALL ITEMS INDICATED SHALL BE NEW AND PROVIDED BY THE CONTRACTOR UNLESS SPECIFICALLY NOTED AS EXISTING OR AS PROVIDED BY THE GOVERNMENT.

SITE PLAN NOTES

1. REMOVAL OF NMCI UNDERGROUND COMMUNICATION LINE NOT IN CONTRACT. COORDINATE SCHEDULE WITH CONTRACTING OFFICER.
2. COORDINATE CUTTING AND PATCHING OF EXISTING SIDEWALK WITH GENERAL CONTRACTOR TO INSTALL NEW UNDERGROUND PRIMARY.
3. STUB EMPTY CONDUIT NEAR EXISTING NMCI PEDESTAL/CABINET AND AT TELECOMMUNICATIONS BACKBOARD EXTERIOR STORAGE ROOM.
4. STUB TWO EMPY 2" SCH. 40 PVC CONDUITS 18" BELOW GRADE TO TOP AND CAP FOR TELEPHONE AND CATV UTILITY SERVICE.
5. NEW 50 KVA SINGLE-PHASE PAD MOUNTED TRANSFORMER ON CONCRETE PAD. SEE DETAIL SHEET E-602.
6. EXISTING SINGLE-PHASE PADMOUNT TRANSFORMER, 7200V PRIMARY, 120/240V SECONDARY. REMOVE SURGE ARRESTOR AND EXTEND PRIMARY TO NEW TRANSFORMER.
7. EXTEND HOMERUN TO PANEL VIA TIMECLOCK. SEE WIRING DIAGRAM SHEET E-502. ROUTE 24" BFG TO TOP.

GRAPHIC SCALE

1/16" = 1'-0" 0 4' 8' 16'

SYM	DESCRIPTION	DATE	APPR

NAVFAC

SEAL

A/E INFO

APPROVED

FOR COMMANDER NAVFAC

ACTIVITY: HERM RAWLINGS

SATISFACTORY TO DATE MM/DD/YY

DES MDM DRW MDM CHK KDL

PM/DM JTL/APK

BRANCH MANAGER KDL ~~JLB~~

CHIEF ENG/ARCH RLW

FIRE PROTECTION DPS

DEPARTMENT OF THE NAVY
NAVAL FACILITIES ENGINEERING COMMAND
NAVAL FACILITIES ENGINEERING COMMAND NORFOLK, VA
HAMPTON ROADS PT
WALLOPS ISLAND, VA
SURFACE COMBAT SYSTEM CENTER

HOUSING WELCOME CENTER

ELECTRICAL SITE PLAN

SCALE: AS NOTED

EPROJECT NO.: 1366574

CONSTR. CONTR. NO.

NAVFAC DRAWING NO. 12708237

SHEET 65 OF 70

ES101

DRAWFORM REVISION: 10 MARCH 2009

FILE NAME: P:\VA\Wallops Island\WLCON\2016_1366574_P238_DBB_HousingWelcomeCenter\B_Design\Drawings\Sheet Files\14_Electrical\\P238-1366574-ES101.dwg LAYOUT NAME: ES101 PLOTTED: Thursday, December 03, 2015 - 11:50am USER: mason.munroe

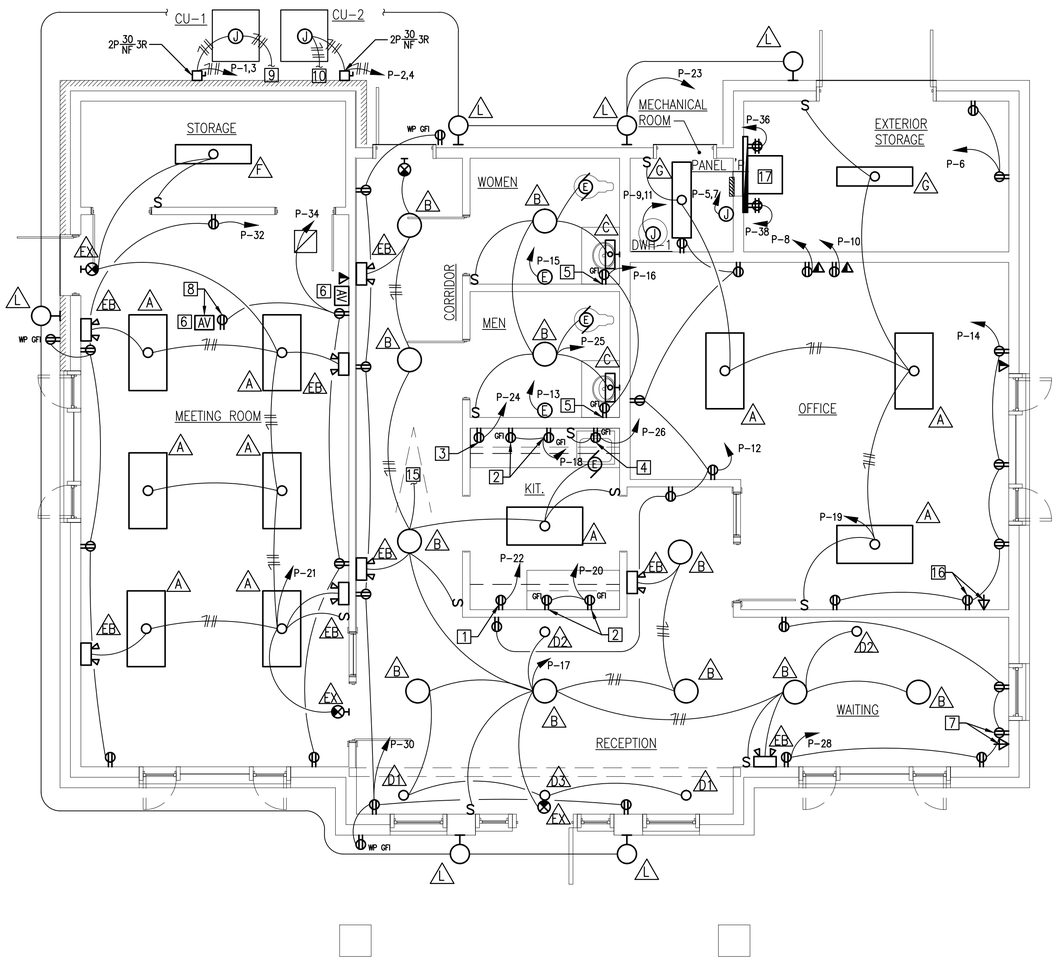

ELECTRICAL NEW WORK PLAN

SCALE: 1/4" = 1'-0"

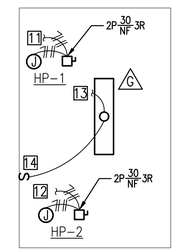

ELECTRICAL ATTIC NEW WORK

SCALE: 1/4" = 1'-0"

PLAN NORTH

NEW WORK KEYNOTES

1. RECEPTACLE FOR REFRIGERATOR 48" AFF.
2. COUNTER TOP RECEPTACLE 6" ABOVE BACKSPLASH.
3. RECEPTACLE FOR MICROWAVE 60" AFF.
4. RECEPTACLE FOR GARBAGE DISPOSAL.
5. RECEPTACLE 42" AFF.
6. PROVIDE 2" EMPTY CONDUIT WITH PULL STRING BETWEEN AV BOXES FOR AV CABLING.
7. RECEPTACLE AND CATV OUTLET LOCATED BEHIND TV. COORDINATE WITH TV LOCATION.
8. RECEPTACLE AND AV BOX MOUNTED FLUSH WITH CEILING FOR PROJECTOR. COORDINATE EXACT LOCATION WITH PROJECTOR INSTALLER.
9. CIRCUIT TO HP-1 IN ATTIC.
10. CIRCUIT TO HP-2 IN ATTIC.
11. CIRCUIT FROM CU-1.
12. CIRCUIT FROM CU-2.
13. CIRCUIT FROM P-17 BELOW.
14. MOUNT SWITCH TO TRUSS NEAR ATTIC ACCESS HATCH.
15. CIRCUIT TO LIGHT IN ATTIC.
16. RECEPTACLE AND CATV OUTLET MOUNTED FLUSH IN CEILING FOR TV. COORDINATE WITH TV LOCATION.
17. WALL MOUNTED, LOCKABLE, AND HINGED WALL BRACKET, TELECOMMUNICATIONS RACK WITH FANS FOR NMCI EQUIPMENT.

GRAPHIC SCALE

1/4"=1'-0" 0' 2' 4' 8'

SYM	DESCRIPTION	DATE	APPR

SEAL

A/E INFO

APPROVED

FOR COMMANDER NAVFAC

ACTIVITY: HERM RAWLINGS

SATISFACTORY TO DATE MM/DD/YY

DES MDM DRW MDM CHK KDL

PM/DM JTL/APK

BRANCH MANAGER KDL

CHIEF ENG/ARCH RLW

FIRE PROTECTION DPS

DEPARTMENT OF THE NAVY
NAVAL FACILITIES ENGINEERING COMMAND
NAVAL FACILITIES ENGINEERING COMMAND NORFOLK, VA
HAMPTON ROADS IPT
SURFACE COMBAT SYSTEM CENTER WALLOPS ISLAND, VA

HOUSING WELCOME CENTER

ELECTRICAL NEW WORK PLAN

SCALE: AS NOTED

EPROJECT NO.: 1366574

CONSTR. CONTR. NO.

NAVFAC DRAWING NO. 12708238

SHEET 66 OF 70

E-101

DRAWFORM REVISION: 10 MARCH 2009

FILE NAME: P:\VA\Wallops Island\MILCON\2016_1366574_P238_DBB_HousingWelcomeCenter\B_Design\Drawings\Sheet Files\14_Electrical\V238-1366574-E-101.dwg LAYOUT NAME: E-101 PLOTTED: Thursday, December 03, 2015 - 11:46am USER: mason.munroe

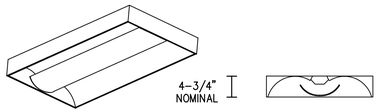

LUMINAIRE REQUIREMENTS:

1. HOUSING – RUGGED, ONE-PIECE COLD-ROLLED STEEL COATED POLYESTER REFLECTOR ASSEMBLY WITH EMBOSSED FACETS AND PLASMA WELDED CORNERS.
2. FINISH – MULTI-STAGE PHOSPHATE BONDING TREATMENT FINISHED WITH HIGH REFLECTANCE (MINIMUM 85%), BAKED WHITE ENAMEL FINISH.
3. DIFFUSER – SINGLE DIFFUSER OF CLEAR IMPACT-MODIFIED ACRYLIC WITH WIDE PHOTOMETRIC DISTRIBUTION.
4. ELECTRONIC DRIVER – IES L80 PERFORMANCE FOR 50,000 HOURS MINIMUM. SOUND RATING "A" WITH LESS THAN 20% THD, MAXIMUM 530mA INPUT CURRENT, AT 120V, MINIMUM 0.9 POWER FACTOR, INHERENT THERMAL PROTECTION, SHORT-CIRCUIT AND OVERLOAD PROTECTION, AND COMPLIES WITH ANSI C62.41 CATEGORY A TRANSIENT PROTECTION. WHERE INDICATED PROVIDE 0-10V DIMMING DOWN TO AT LEAST 5% LIGHT OUTPUT OR BI-LEVEL DIMMING.
5. CERTIFICATION – UL LISTED AND LABELED, CLASS P, TYPE 1 OUTDOOR.
6. PHOTOMETRICS – MINIMUM VALUE OF COEFFICIENT OF UTILIZATION (CU) AND EFFICIENCY, GIVEN INTERIOR CAVITY REFLECTANCES OF 80-50-20:

TYPE A

NOMINAL 48W INPUT/ WITH 4360 DELIVERED LUMENS

RCR	CU
1	1.03
2	0.90
3	0.79
4	0.70

DELIVERED LUMENS PER WATT – 92 MINIMUM

TYPE B

NOMINAL 40W INPUT/ WITH 4026 DELIVERED LUMENS

RCR	CU
1	1.03
2	0.90
3	0.79
4	0.70

DELIVERED LUMENS PER WATT – 92 MINIMUM

7. EMERGENCY OPTION – WHERE INDICATED, PROVIDE INTEGRAL 1100 LUMEN MINIMUM EMERGENCY BATTERY, INVERTER AND CHARGER.

CENTER BASKET 2' X 4' DIRECT/INDIRECT LED TROFFER (A)

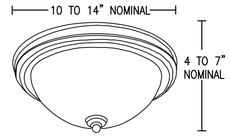

LUMINAIRE REQUIREMENTS:

1. HOUSING – DECO STYLED ROUND WITH MATCHING CENTER FINIAL. BACK PAN DESIGNED FOR DIRECT MOUNTING TO OUTLET BOX.
2. FINISH – ELECTROPLATED OR WHITE HIGH REFLECTANCE POWDER COAT. CHOICE OF WHITE, BRUSHED NICKEL OR BRONZE FINISH.
3. DIFFUSER – TRANSLUCENT UV STABALIZED WHITE GLASS DIFFUSER.
4. ELECTRONIC DRIVER – IES L80 PERFORMANCE FOR 50,000 HOURS MINIMUM. SOUND RATING "A" WITH LESS THAN 20% THD, MAXIMUM 530mA INPUT CURRENT AT 120V, MINIMUM 0.9 POWER FACTOR, INHERENT THERMAL PROTECTION, SHORT-CIRCUIT AND OVERLOAD PROTECTION, AND COMPLIES WITH ANSI C62.41 CATEGORY A TRANSIENT PROTECTION.
5. CERTIFICATION – UL LISTED AND LABELED.
6. PHOTOMETRICS – MINIMUM VALUE OF COEFFICIENT OF UTILIZATION (CU) AND EFFICIENCY, GIVEN INTERIOR CAVITY REFLECTANCES OF 80-50-20:

TYPE A: NOMINAL 10" DIAMETER

NOMINAL 20W INPUT WITH 960 DELIVERED LUMENS OUTPUT

RCR	CU
1	0.97
2	0.83
3	0.72
4	0.63

DELIVERED LUMENS PER WATT – 48.0 MINIMUM

TYPE B: NOMINAL 14" DIAMETER

NOMINAL 30W INPUT WITH 1500 DELIVERED LUMENS OUTPUT

RCR	CU
1	0.98
2	0.84
3	0.73
4	0.64

DELIVERED LUMENS PER WATT – 52.0 MINIMUM

DECORATIVE BOWL LED (B)

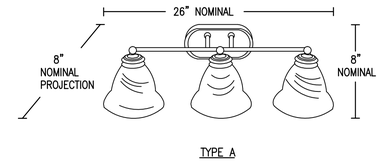

TYPE A

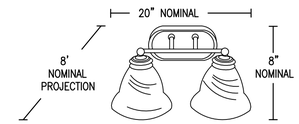

TYPE B

LUMINAIRE REQUIREMENTS:

HOUSING – DECO STYLED ROUND WITH MATCHING CENTER FINIAL. BACK PAN DESIGNED FOR DIRECT MOUNTING TO OUTLET BOX.

FINISH – ELECTROPLATED BRUSHED NICKEL.

DIFFUSER – ETCHED WHITE GLASS DIFFUSER.

LAMPS – THREE SELF-DRIVER LED 2-PRONG ELECTRONIC GU-24 BASES. PROVIDE WATTAGE(S) AS INDICATED. SEE LIGHTING FIXTURE SCHEDULE. LAMP/DRIVER SHALL DELIVER A A MINIMUM OF 65 DELIVERED LUMENS PER WATT AT A COLOR TEMPERATURE OF 3000K. LIFETIME RATING OF 25,000 HOURS MINIMUM.

CERTIFICATION – UL LISTED AND LABELED.

DECORATIVE LED VANITY (C)

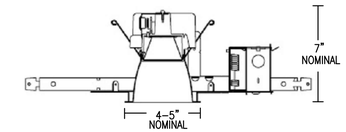

LUMINAIRE REQUIREMENTS:

1. HOUSING – 16-GUAGE GALVANIZED STEEL CONSTRUCTION. MAXIMUM 1-1/2" CEILING THICKNESS. TELESCOPING MOUNTING BARS MAXIMUM OF 32" AND MINIMUM OF 15", PREINSTALLED, 4" VERTICAL ADJUSTMENT. TOOLLESS ADJUSTMENTS POST INSTALLATION. LIGHT ENGINE DRIVER ACCESSIBLE THROUGH APERTURE.
2. OPTICAL SYSTEM – SELF-FLANGED SEMI-SPECULAR. 45° CUTOFF TO SOURCE AND SOURCE IMAGE. POLYCARBONATE LENS INTEGRAL TO LIGHT ENGINE. CLEAR APERTURE.
3. ELECTRICAL SYSTEM – IES TESTED TO LM-79 AND LM-80. LM-80 PERFORMANCE FOR 60,000 HOURS MINIMUM. OVERLOAD AND SHORT CIRCUIT PROTECTED. FULLY SERVICEABLE AND UPGRADABLE LENSED LED LIGHT ENGINE. 2.5 SDCM AND 80 CRI. 0-10V DIMMING.
4. CERTIFICATION – UL LISTED AND LABELED, WET LOCATION.
5. OPTIONS – EMERGENCY BATTERY BACKUP, WALL WASH.
6. PHOTOMETRICS – MINIMUM VALUE OF COEFFICIENT OF UTILIZATION (CU) AND EFFICIENCY, GIVEN INTERIOR CAVITY REFLECTANCES OF 80-50-20:

NOMINAL 12.8W INPUT WITH 1189 DELIVERED LUMENS OUTPUT

RCR	CU
1	1.11
2	1.03
3	0.96
4	0.90

DELIVERED LUMENS PER WATT – 80.0 MINIMUM

FIXTURE DESCRIPTION (D1) (D2) (D3)

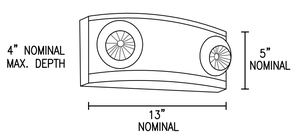

LUMINAIRE REQUIREMENTS:

1. HOUSING – UV STABLE, FLAME-RATED, HIGH-IMPACT THERMOPLASTIC IN WHITE OR BLACK TEXTURED FINISH.
2. INTERNAL COMPONENTS – FULLY AUTOMATIC, SOLID STATE, CONSTANT VOLTAGE, CURRENT-LIMITED BATTERY CHARGER; MAINTENANCE-FREE LEAD-ACID BATTERY; AND BUILT-IN OVERLOAD AND LOW-VOLTAGE BATTERY PROTECTION.
3. EXTERIOR HOUSING INDICATORS – LED AC-ON INDICATOR AND INTEGRAL TEST SWITCH.
4. LAMP HEADS – UV STABLE, FLAME RATED POLYCARBONATE THERMOPLASTIC. MR16 HALOGEN LAMPS SHALL BE 5 WATTS, HIGH-OUTPUT OR AS INDICATED IN LIGHTING FIXTURE SCHEDULE.
5. MOUNTING – DIRECTLY TO 4" OCTAGONAL OR SQUARE OUTLET BOX.
6. CERTIFICATION – UL LISTED AND LABELED. COMPLIES WITH UL 924 AND NFPA 101 REQUIREMENTS. LISTED FOR DAMP LOCATIONS.
7. OPTIONS – VOLTMETER, VANDEL-RESISTANT SHIELD, SELF-DIAGNOSTIC/TESTING ELECTRONICS AND WIRE GUARD.

DECORATIVE EMERGENCY LIGHTING UNIT (EB)

REVISED: AUGUST 2004 LIGHTING PLATE: NL-67

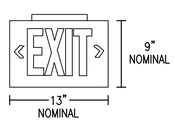

LUMINAIRE REQUIREMENTS:

1. HOUSING – DIE-CAST ALUMINUM OR HIGH-IMPACT, UV-STABILIZED, INJECTION-MOLDED THERMOPLASTIC. SINGLE OR DOUBLE-FACED AS INDICATED.
2. FINISH (ON CAST ALUMINUM HOUSING ONLY) – TEXTURED POWDER COAT FINISH OPTIONS INCLUDE WHITE, WHITE WITH BRUSHED ALUMINUM FACE, BLACK, OR BLACK WITH BRUSHED ALUMINUM FACE.
3. LETTERS/CHEVRONS – MINIMUM 6" HIGH WITH 3/4" STROKE. RED OR GREEN LETTERS AS INDICATED. PROVIDE CHEVRONS AS INDICATED EITHER LEFT, RIGHT OR BOTH DIRECTIONS AS INDICATED. CHEVRONS PUNCHED OUT THROUGH HOUSING AS REQUIRED.
4. EMERGENCY PACK – SOLID-STATE, CONSTANT-CURRENT TYPE BATTERY CHARGER WITH MAINTENANCE-FREE, NICKEL-CADMIUM BATTERY, AC-ON INDICATOR LAMP AND TEST SWITCH.
5. MOUNTING – UNIVERSAL MOUNTING KIT FOR CEILING, WALL OR END-OF-FIXTURE MOUNTING.
6. ILLUMINATION – PROVIDED BY RED, GREEN OR WHITE HIGH-OUTPUT LEDS INSIDE OF FIXTURE HOUSING. PROVIDE POLYSTYRENE DIFFUSER IN COLOR INDICATED WITH FREQUENCY-MATCHED SILKSCREEN COATING FOR MAXIMUM LED LIGHT OUTPUT.
7. CERTIFICATION – UL LISTED AND CERTIFIED FOR DAMP LOCATIONS.

LED EXIT SIGN (EX)

REVISED: AUGUST 2004 LIGHTING PLATE: NL-63

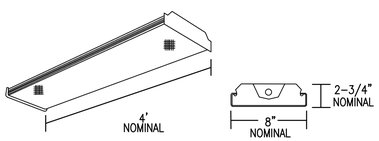

LUMINAIRE REQUIREMENTS:

1. HOUSING – DIE-FORMED, COLD-ROLLED STEEL, WITH REINFORCEMENT RIBS FOR RIGIDITY. ENDCAPS SHALL BE SAME MATERIAL AS HOUSING, SECURED WITH TABS, SCREWS OR RIVETS. FIXTURE SHALL NOT PERMANENTLY DEFORM OUT OF "SQUARE" WHEN PICKED UP FROM ANY CORNER.
2. FINISH – MULTI-STAGE PHOSPHATE BONDING TREATMENT FINISHED WITH HIGH REFLECTANCE (MINIMUM 85%), BAKED WHITE ENAMEL FINISH.
3. LENS – 100% UV STABALIZED ACRYLIC FROSTED WITH A NOMINAL 0.125" THICKNESS.
4. ELECTRONIC DRIVER – IES L80 PERFORMANCE FOR 50,000 HOURS MINIMUM. SOUND RATING "A" WITH LESS THAN 20% THD, MAXIMUM 530mA INPUT CURRENT AT 120V, MINIMUM 0.9 POWER FACTOR, INHERENT THERMAL PROTECTION, SHORT-CIRCUIT AND OVERLOAD PROTECTION, AND COMPLIES WITH ANSI C62.41 CATEGORY A TRANSIENT PROTECTION.
5. CERTIFICATION – UL LISTED AND LABELED.
6. PHOTOMETRICS – MINIMUM VALUE OF COEFFICIENT OF UTILIZATION (CU) AND EFFICIENCY, GIVEN INTERIOR CAVITY REFLECTANCES OF 80-50-20:

NOMINAL 50W INPUT WITH 4050 DELIVERED LUMENS OUTPUT

RCR	CU
1	1.02
2	0.90
3	0.80
4	0.72

DELIVERED LUMENS PER WATT – 77.0 MINIMUM

FIXTURE DESCRIPTION (F)

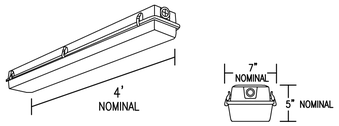

LUMINAIRE REQUIREMENTS:

1. HOUSING – ONE-PIECE, IMPACT-RESISTANT, FIBERGLASS REINFORCED POLYESTER WITH ENCLOSED COLD-ROLLED STEEL WIREWAY.
2. FINISH – STEEL REFLECTOR WITH MULTI-STAGE PHOSPHATE BONDING TREATMENT FINISHED WITH HIGH REFLECTANCE (MINIMUM 85%), BAKED WHITE ENAMEL FINISH.
3. LENS – 100% CLEAR ACRYLIC/DR OPTICAL DIFFUSER. STIPPLED INTERIOR SURFACES AND SMOOTH EXTERIOR. CLOSED CELL NEOPRENE GASKET WITH CAPTIVE NONMETALLIC, SNAP ACTION CAM LATCHES TO SECURE LENS TO HOUSING.
4. ELECTRONIC DRIVER – IES L80 PERFORMANCE FOR 50,000 HOURS MINIMUM. SOUND RATING "A" WITH LESS THAN 20% THD, MAXIMUM 530mA INPUT CURRENT AT 120V, MINIMUM 0.9 POWER FACTOR, INHERENT THERMAL PROTECTION, SHORT-CIRCUIT AND OVERLOAD PROTECTION, AND COMPLIES WITH ANSI C62.41 CATEGORY A TRANSIENT PROTECTION.
5. CERTIFICATION – UL LISTED AND LABELED. SUITABLE FOR DAMP OR WET LOCATION AS DESIGNATED IN LIGHTING FIXTURE SCHEDULE.
6. PHOTOMETRICS – MINIMUM VALUE OF COEFFICIENT OF UTILIZATION (CU) AND EFFICIENCY, GIVEN INTERIOR CAVITY REFLECTANCES OF 80-50-20:

NOMINAL 38W INPUT WITH 3426 DELIVERED LUMENS OUTPUT

RCR	CU
1	1.02
2	0.89
3	0.78
4	0.69

DELIVERED LUMENS PER WATT – 85.6 MINIMUM

FIXTURE DESCRIPTION (G)

SYM	DESCRIPTION	DATE	APPR

NAVFAC

SEAL

A/E INFO

APPROVED

FOR COMMANDER NAVFAC

ACTIVITY: HERM RAWLINGS

SATISFACTORY TO DATE MM/DD/YY

DES MDM DRW MDM CHK KDL

PM/DM JTL/APK

BRANCH MANAGER KDL

CHIEF ENG/ARCH RLW

FIRE PROTECTION DPS

DEPARTMENT OF THE NAVY
NAVAL FACILITIES ENGINEERING COMMAND
HAMPTON ROADS IPT

NAVAL FACILITIES ENGINEERING COMMAND NORFOLK, VA
WALLOPS ISLAND, VA
SURFACE COMBAT SYSTEM CENTER

HOUSING WELCOME CENTER

LIGHTING PLATES

SCALE: AS NOTED

EPROJECT NO.: 1366574

CONSTR. CONTR. NO.

NAVFAC DRAWING NO. 12708239

SHEET 67 OF 70

E-501

DRAWFORM REVISION: 10 MARCH 2009

FILE NAME: P:\VA\Wallops Island\MILCON\2016_1366574_P238_D8B_HousingWelcomeCenter\B_Design\Drawings\Sheet Files\14_Electrical\v238-1366574-E-501.dwg LAYOUT NAME: E-501 PLOTTED: Thursday, December 03, 2015 - 11:38am USER: mason.munroe

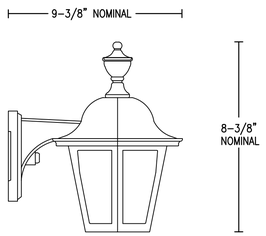

LUMINAIRE REQUIREMENTS:

1. HOUSING – CAST ALUMINUM FINIAL. CAST ALUMINUM HEX ROOF SECURED TO CAGE WITH THUMBSCREWS. CAST ALUMINUM HEX CAGE WITH CONE BOTTOM.
2. FINISH – TGIC THERMOSET POLYESTER POWDERCOAT PAINT (BLACK).
3. PANELS/LENS – SET OF 6 CLEAR ACRYLIC PANELS.
4. POWER SUPPLY/LED DRIVER – CLASS 1 DRIVER SHALL OPERATE AT 120/277V, 50/60 HZ. POWER FACTOR GREATER THAN 0.9 AND THD LESS THAN 20% AT FULL LOAD. MINIMUM EFFICAY SHALL BE 80 LM/W AT MAXIMUM 530 mA OPERATING CURRENT. INPUT POWER SHALL BE A NOMINAL 25 INPUT WATTS.
5. LED OPTICAL ASSEMBLY– NUMBER OF LED ARRAYS SHALL VARY TO ACCOMMODATE DESIRED LUMINAIRE OUTPUT. MINIMUM COLOR RENDERING INDEX (CRI) SHALL BE 70 FOR CORRELATED COLOR TEMPERATURES (CCT) OF 4000–4500 DEGREES K.
6. SURGE PROTECTION – 6 kV MINIMUM, COMPLIANT WITH ANSI C62.41.2.
7. CERTIFICATION – UL AND/OR ETL LISTED WET–LOCATION, AND RoHS COMPLIANT.
8. OPTIONS – FINISH COLOR, PHOTOCELL, AND 0–10 VOLT DIMMING DRIVER.
9. OTHER – THE ABOVE SKETCH IS A NON–PROPRIETARY GRAPHIC REPRESENTATION OF A LUMINAIRE THAT MAY MEET THE SPECIFICATION REQUIREMENTS AND IS NOT INTENDED TO INDICATE A CERTAIN MANUFACTURER'S PREFERENCE. ALL DIMENSIONS ARE NOMINAL AND VARY PER MANUFACTURER.

DECORATIVE LED WALL SCONCE (L)

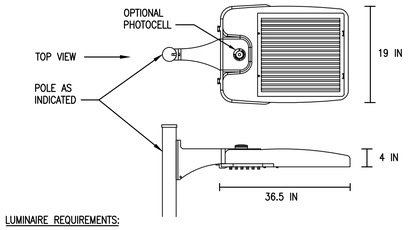

LUMINAIRE REQUIREMENTS:

1. HOUSING – DIE–CAST ALUMINUM OR DIE–CAST AND EXTRUDED ALUMINUM WITH INTEGRAL, SELF–CLEANING HEAT SINK FINS, RIBS, OR EQUIVALENT PASSIVE COOLING MECHANISM. HEAT SINK SHALL BE INCORPORATED DIRECTLY INTO HOUSING TO ENSURE MAXIMUM HEAT TRANSFER AND DISSIPATION.
2. FINISH – MULTI–STAGE PRE–TREATMENT, FINISHED WITH BAKED–ON POLYESTER POWDER COAT. FINISH SHALL PASS 2500 HOUR SALT SPRAY TEST PER ASTM B117. FINISH COLORS INCLUDE DARK BRONZE, SILVER, OR BLACK WITH CUSTOM COLORS AVAILABLE.
3. POWER SUPPLY/LED DRIVER – PROVIDE IN SEPARATE COMPARTMENT ACCESSIBLE WITHOUT THE USE OF HAND TOOLS. CLASS 1 DRIVER SHALL OPERATE AT 120/277V, 50/60 HZ; OTHER VOLTAGES OPTIONAL. POWER FACTOR GREATER THAN 0.9 AND THD LESS THAN 20% AT FULL LOAD. MINIMUM EFFICACY SHALL BE 60 LM/W AT MAXIMUM 600 mA OPERATING CURRENT.
4. LED OPTICAL ASSEMBLY – NUMBER OF LED ARRAYS SHALL VARY TO ACCOMMODATE DESIRED LUMINAIRE OUTPUT. PROVIDE WITH EQUIVALENT NEMA TYPE III, IV OR V DISTRIBUTION AS INDICATED. BUG UPLIGHT RATING OF U0, WITH BACKLIGHT AND GLARE RATINGS AS DETERMINED BY LIGHTING ZONE INSTALLED. MINIMUM COLOR RENDERING INDEX (CRI) SHALL BE 70 FOR CORRELATED COLOR TEMPERATURE (CCT) OF 4000 K TO 4500 DEGREES K.
5. SURGE PROTECTION – 6 kV MINIMUM, COMPLIANT WITH ANSI C62.41.2.
6. CERTIFICATION – UL AND/OR ETL LISTED, MINIMUM IP65 RATED PER ANSI/IEC 60529, AND RoHS COMPLIANT.
7. OPTIONS – PHOTOCELL AND RECEPTACLE, SHORTING CAP, BIRD SPIKES, AND 0–10 VOLT DIMMING DRIVER.
8. OTHER – THE ABOVE SKETCH IS A NON–PROPRIETARY GRAPHIC REPRESENTATION OF A LUMINAIRE THAT MAY MEET THE SPECIFICATION REQUIREMENTS AND IS NOT INTENDED TO INDICATE A CERTAIN MANUFACTURER'S PREFERENCE. ALL DIMENSIONS ARE NOMINAL AND VARY PER MANUFACTURER.

LED AREA LUMINAIRE (SA)

REVISED: MARCH 2013 LIGHTING PLATE: XL–03

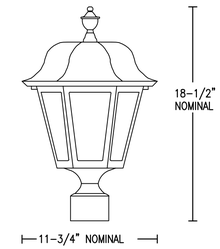

LUMINAIRE REQUIREMENTS:

1. HOUSING – CAST ALUMINUM FINIAL. CAST ALUMINUM HEX ROOF SECURED TO CAGE WITH THUMBSCREWS. CAST ALUMINUM HEX CAGE WITH CONE BOTTOM.
2. FINISH – TGIC THERMOSET POLYESTER POWDERCOAT PAINT (BLACK).
3. PANELS/LENS – SET OF OPAL ACRYLIC PANELS.
4. POWER SUPPLY/LED DRIVER – CLASS 1 DRIVER SHALL OPERATE AT 120/277V, 50/60 HZ. POWER FACTOR GREATER THAN 0.9 AND THD LESS THAN 20% AT FULL LOAD. MINIMUM EFFICACY SHALL BE 80 LM/W AT MAXIMUM 530 mA OPERATING CURRENT. INPUT POWER SHALL BE A NOMINAL 25 INPUT WATTS.
5. LED OPTICAL ASSEMBLY– NUMBER OF LED ARRAYS SHALL VARY TO ACCOMMODATE DESIRED LUMINAIRE OUTPUT. MINIMUM COLOR RENDERING INDEX (CRI) SHALL BE 70 FOR CORRELATED COLOR TEMPERATURES (CCT) OF 4000–4500 DEGREES K.
6. SURGE PROTECTION – 6 kV MINIMUM, COMPLIANT WITH ANSI C62.41.2.
7. CERTIFICATION – UL AND/OR ETL LISTED WET–LOCATION, AND RoHS COMPLIANT.
8. OPTIONS – EMERGENCY BATTERY BACKUP DRIVER.
9. OTHER – THE ABOVE SKETCH IS A NON–PROPRIETARY GRAPHIC REPRESENTATION OF A LUMINAIRE THAT MAY MEET THE SPECIFICATION REQUIREMENTS AND IS NOT INTENDED TO INDICATE A CERTAIN MANUFACTURER'S PREFERENCE. ALL DIMENSIONS ARE NOMINAL AND VARY PER MANUFACTURER.

LED AREA LUMINAIRE (SB)

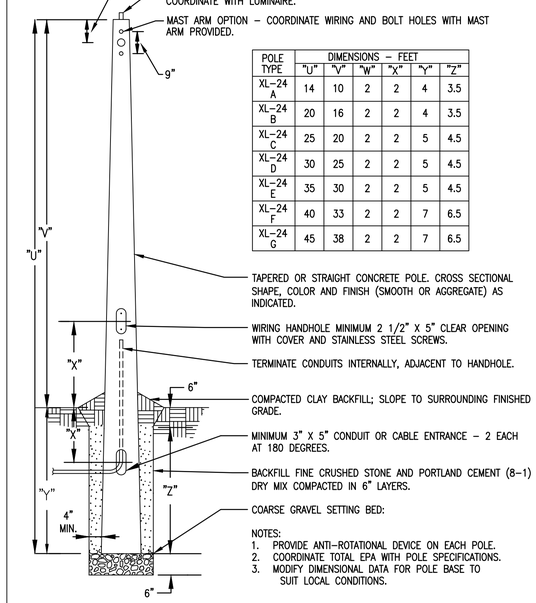

POLE TYPE	DIMENSIONS – FEET					
	"U"	"V"	"W"	"X"	"Y"	"Z"
XL–24 A	14	10	2	2	4	3.5
XL–24 B	20	16	2	2	4	3.5
XL–24 C	25	20	2	2	5	4.5
XL–24 D	30	25	2	2	5	4.5
XL–24 E	35	30	2	2	5	4.5
XL–24 F	40	33	2	2	7	6.5
XL–24 G	45	38	2	2	7	6.5

NOTES:
1. PROVIDE ANTI–ROTATIONAL DEVICE ON EACH POLE.
2. COORDINATE TOTAL EPA WITH POLE SPECIFICATIONS.
3. MODIFY DIMENSIONAL DATA FOR POLE BASE TO SUIT LOCAL CONDITIONS.

DIRECT–SET CONCRETE POLE

REVISED: MARCH 2013 LIGHTING PLATE: XL–24

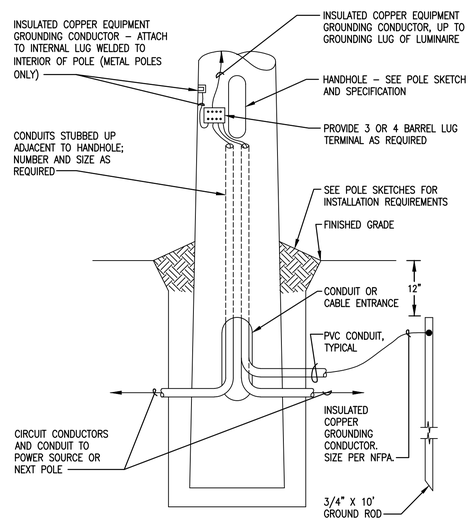

DIRECT SET POLE GROUNDING DETAIL

REVISED: MARCH 2013 LIGHTING PLATE: XL–30

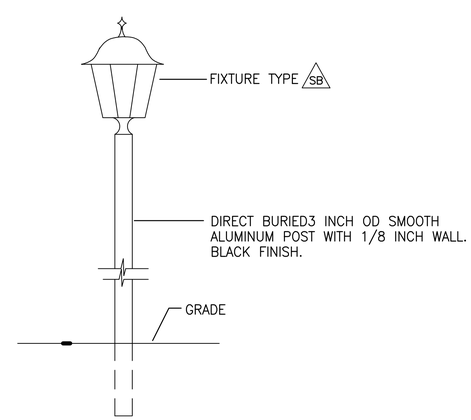

POST DETAIL
NTS

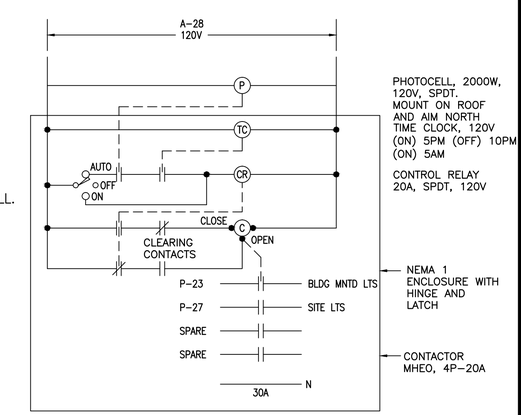

EXTERIOR LIGHTING CONTROL DIAGRAM
NOT TO SCALE

SYM	DESCRIPTION	DATE	APPR

NAVFAC

SEAL

A/E INFO

APPROVED

FOR COMMANDER NAVFAC

ACTIVITY: HERM RAWLINGS

SATISFACTORY TO DATE MM/DD/YY

DES MDM DRW MDM CHK KDL

PM/DM JTL/APK

BRANCH MANAGER KDL

CHIEF ENG/ARCH RLW

FIRE PROTECTION DFS

DEPARTMENT OF THE NAVY
NAVAL FACILITIES ENGINEERING COMMAND
HAMPTON ROADS IPT

NAVAL FACILITIES ENGINEERING COMMAND
NORFOLK, VA

WALLOPS ISLAND, VA

SURFACE COMBAT SYSTEM CENTER

HOUSING WELCOME CENTER

LIGHTING PLATES

SCALE: AS NOTED

EPROJECT NO.: 1366574

CONSTR. CONTR. NO.

NAVFAC DRAWING NO. 12708240

SHEET 68 OF 70

E-502

DRAWFORM REVISION: 10 MARCH 2009

FILE NAME: P:\VA\Wallops Island\MILCON\2016_1366574_P238_DBB_HousingWelcomeCenter\B_Design\Drawings\Sheet Files\14_Electrical\V238-1366574-E-502.dwg LAYOUT NAME: E-502 PLOTTED: Thursday, December 03, 2015 - 11:37am USER: mason.munroe

LIGHTING FIXTURE SCHEDULE

FIXTURE SYMBOL	FIXTURE PLATE	FIXTURE TYPE	PLATE SHEET	NUMBER AND TYPE OF LAMPS	FIXTURE		MOUNTING		NOTES
					WATTS	VOLTAGE	LOCATION	HEIGHT	
A	NA	A	E-501	LED	48	120	CEILING SURFACE	NA	NA
B	NA	B	E-501	LED	30	120	CEILING SURFACE	NA	NA
C	NA	B	E-501	LED	14	120	WALL	6'-10" AFF	NA
D1	NA	NA	E-501	LED	12.8	120	CEILING RECESSED	NA	1
D2	NA	NA	E-501	LED	12.8	120	CEILING RECESSED	NA	1, 4
D3	NA	NA	E-501	LED	12.8	120	CEILING RECESSED	NA	1, 3
EB	NL-67	NA	E-501	(2) 5W HALOGEN	15	120	WALL	7'-0" AFF	NA
EX	NL-63	NA	E-501	LED	5	120	CEILING/WALL SURFACE	6" ABOVE DOOR	NA
F	NA	NA	E-501	LED	50	120	CEILING SURFACE	NA	NA
G	NA	NA	E-501	LED	38	120	CEILING SURFACE	NA	NA
L	NA	NA	E-502	LED	25	120	WALL	7'-0" AFF	3
SA	XL-03	NA	E-502	LED	85	120	POLE	20'-0" AFG	2
SB	NA	NA	E-502	LED	25	120	POLE	6'-0" AFG	3

LIGHTING FIXTURE SCHEDULE NOTES:

1. PROVIDE IC-RATED CONSTRUCTION OR PROVIDE IC-RATED ENCLOSURE SUITABLE FOR USE WITH FIXTURE INSTALLATION.
2. PROVIDE WITH XL-24 'TYPE C' POLE. SEE XL-24 DETAIL ON SHEET E-502.
3. PROVIDE WITH EMERGENCY BATTERY BACKUP DRIVER.
4. PROVICE WITH WALL WASH OPTICS.

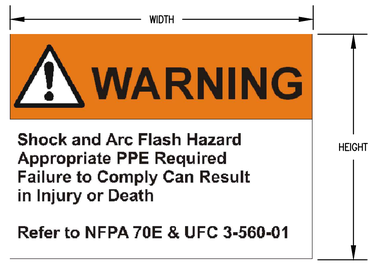

NOTES:

1. PROVIDE SELF-ADHESIVE VINYL LABEL TO AFFIX TO ELECTRICAL EQUIPMENT TO WARN OF ARC FLASH HAZARDS.
2. THE LABEL FORMAT AND TEXT SHALL BE IN ACCORDANCE WITH THE FIGURE.
3. THE LABEL SHALL BE LOCATED ON THE EQUIPMENT TO BE CLEARLY VISIBLE TO QUALIFIED PERSONS BEFORE EXAMINATION, ADJUSTMENT, SERVICING, OR MAINTENANCE OF THE EQUIPMENT.
4. THE SIZE OF THE LABEL SHALL BE:

EQUIPMENT TYPE	HEIGHT	WIDTH
INDOOR	2"	3"
OUTDOOR	4"	6"

5. A DOWNLOADABLE WINDOWS METAFILE IS AVAILABLE ON THE WHOLE BUILDING DESIGN GUIDE WEBSITE (WWW.WBDG.ORG) FOR USE IN A LABEL MAKING MACHINE.
   A. THE FILE IS LOCATED ON THE "NAVFAC CADD DETAILS" PAGE. TO NAVIGATE TO THIS LOCATION, FOLLOW: HOME > DOCUMENTS & REFERENCES > CCB > CADD LIBRARY > NAVFAC CADD RESOURCES > NAVFAC CADD DETAILS.
   B. ALTERNATIVELY, TYPE IN THE FOLLOWING ADDRESS IN INTERNET EXPLORER: HTTP://WWW.WBDG.ORG/CCB/BROWSE_CAT.PHP?O=78&C=232

ARC FLASH WARNING LABEL

SKETCH DATE	JANUARY 2008	STYLE	AF-1

PANELBOARD 'P' SCHEDULE

200A MAIN CIRCUIT BREAKER, 120/240V, 1 PHASE, 3 WIRE, 22 KAIC MINIMUM, SURFACE MOUNT

LOAD SERVED	LOAD (AMPS) A	LOAD (AMPS) B	BKR. TRIP	WIRE SIZE	CKT. NO.	PHASE A B	CKT. NO.	WIRE SIZE	BKR. TRIP	LOAD (AMPS) A	LOAD (AMPS) B	LOAD SERVED
HP-1 AND CU-1	10.0		20	12	1		2	12	20	10.0		HP-2 AND CU-2
		10.0			3		4				10.0	
CUH-1	4.5		20	12	5		6	12	20	6.0		REC EXT STORAGE
		4.5			7		8	12	20		1.5	REC OFFICE
DWH-1	25.0		30	10	9		10	12	20	1.5		REC OFFICE
		25.0			11		12	12	20		7.5	REC OFFICE & WAITING
HAND DRYER MEN	10.0		25	12	13		14	12	20	7.5		REC OFFICE
HAND DRYER WOMEN		10.0	20	12	15		16	12	20		3.0	REC MEN & WOMEN
LTS RECEPTION, WAITING, KITCHEN	3.1		20	12	17		18	12	20	3.0		REC KITCHEN COUNTER
LTS OFFICE, MECH, EXT STORAGE		1.8	20	12	19		20	12	20		3.0	REC KITCHEN COUNTER
LTS MEETING	3.2		20	12	21		22	12	20	8.0		REC REFRIGERATOR
LTS EXTERIOR BUILDING MOUNTED		1.3	20	12	23		24	12	20		12.0	REC MICROWAVE
LTS MEN & WOMEN	2.2		20	12	25		26	12	20	10.0		REC GARBAGE DISPOSAL
LTS SITE		1.0	20	12	27		28	12	20		6.0	REC WAITING
SPARE			20		29		30	12	20	10.5		REC CORRIDOR & RECEPTION
SPARE			20		31		32	12	20		7.5	REC MEETING
SPARE			20		33		34	12	20	6.0		REC MEETING
SPARE			20		35		36	12	20		3.0	REC TELECOMM BACKBOARD
SPARE			20		37		38	12	20	3.0		REC TELECOMM BACKBOARD
SPARE			20		39		40		20			SPARE
SPARE			20		41		42		20			SPARE
TOTAL	58.0	53.6								65.5	53.5	TOTAL

TOTAL CONNECTED AMPS A: 123.5 B: 107.1

1. PROVIDE GFCI TYPE CIRCUIT BREAKER ON CIRCUITS 3 AND 22.
2.

SYM	DESCRIPTION	DATE	APPR

NAVFAC

SEAL

A/E INFO

APPROVED

FOR COMMANDER NAVFAC

ACTIVITY: HERM RAWLINGS

SATISFACTORY TO DATE MM/DD/YY

DES MDM DRW MDM CHK KDL

PM/DM JTL/APK

BRANCH MANAGER KDL

CHIEF ENG/ARCH RLW

FIRE PROTECTION DPS

DEPARTMENT OF THE NAVY
NAVAL FACILITIES ENGINEERING COMMAND
NAVAL FACILITIES ENGINEERING COMMAND NORFOLK, VA
HAMPTON ROADS IPT
WALLOPS ISLAND, VA
SURFACE COMBAT SYSTEM CENTER
HOUSING WELCOME CENTER
PANELBOARD AND LIGHTING SCHEDULES

SCALE: AS NOTED

EPROJECT NO.: 1366574

CONSTR. CONTR. NO.

NAVFAC DRAWING NO. 12708241

SHEET 69 OF 70

E-601

DRAWFORM REVISION: 10 MARCH 2009

FILE NAME: P:\VA\Wallops Island\MILCON\2016_1366574_P238_DBB_HousingWelcomeCenter\B_Design\Drawings\Sheet Files\14_Electrical\V238-1366574-E-601.dwg LAYOUT NAME: E-601 PLOTTED: Thursday, December 03, 2015 - 11:52am USER: mason.munroe

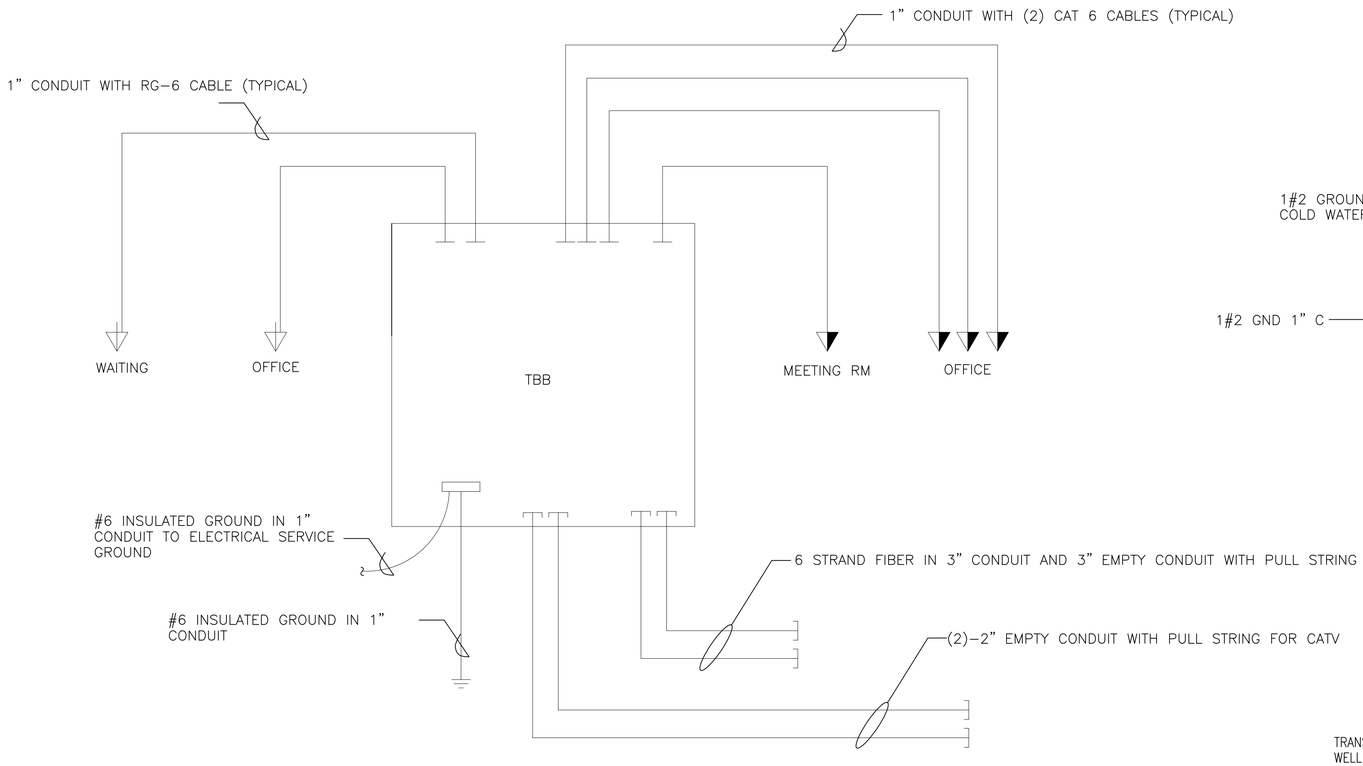

TELECOMMUNICATIONS RISER DIAGRAM

NOT TO SCALE

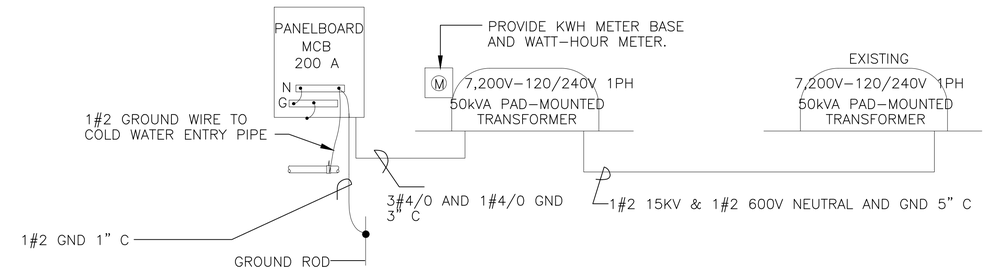

POWER RISER DIAGRAM

NOT TO SCALE

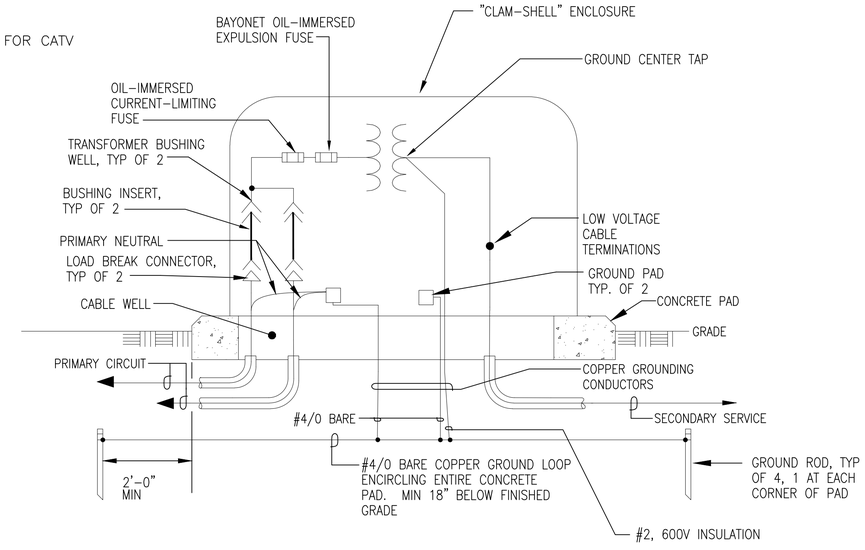

SINGLE PHASE PAD-MOUNTED TRANSFORMER DETAIL

NOT TO SCALE

PHASE-NEUTRAL CONNECTION SHOWN

DEAD FRONT LOOP FEED CONFIGURATION (FEED-THRU CIRCUIT)

SYM	DESCRIPTION	DATE	APPR

NAVFAC

SEAL

A/E INFO

APPROVED

FOR COMMANDER NAVFAC

ACTIVITY: HERM RAWLINGS

SATISFACTORY TO DATE MM/DD/YY

DES MDM DRW MDM CHK KDL

PM/DM JTL/APK

BRANCH MANAGER KDL

CHIEF ENG/ARCH RLW

FIRE PROTECTION DPS

DEPARTMENT OF THE NAVY
NAVAL FACILITIES ENGINEERING COMMAND
NAVAL FACILITIES ENGINEERING COMMAND NORFOLK, VA
HAMPTON ROADS, IPT
SURFACE COMBAT SYSTEM CENTER WALLOPS ISLAND, VA

HOUSING WELCOME CENTER

POWER RISER DIAGRAM AND DETAILS

SCALE: AS NOTED

EPROJECT NO.: 1366574

CONSTR. CONTR. NO.

NAVFAC DRAWING NO. 12708242

SHEET 70 OF 70

E-602

DRAWFORM REVISION: 10 MARCH 2009

FILE NAME: P:\VA\Wallops Island\MILCON\2016_1366574_P238_DBB_HousingWelcomeCenter\B_Design\Drawings\Sheet Files\14_Electrical\V238-1366574-E-602.dwg LAYOUT NAME: E-602 PLOTTED: Thursday, December 03, 2015 - 11:28am USER: mason.munroe