f'c = 3,000 psi
fy = 60,000 psi

Size	Ld	Ldt	Lb	Lbt	Ldh
#4	22	28	28	37	11
#5	27	36	36	46	14
#6	33 (49)	43 (64)	43 (64)	56 (83)	16
#7	48 (72)	62 (93)	62 (93)	81 (121)	19
#8	55 (82)	71 (107)	71 (107)	93 (139)	22
#9	62 (93)	80 (120)	80 (120)	104 (157)	25
#10	70 (104)	90 (136)	90 (136)	118 (176)	28
#11	77 (116)	100 (151)	100 (151)	131 (196)	31

f'c = 4,000 psi
fy = 60,000 psi

Size	Ld	Ldt	Lb	Lbt	Ldh
#4	19 (28)	25 (37)	25 (37)	32 (48)	9
#5	24 (36)	31 (46)	31 (46)	40 (60)	12
#6	28 (43)	37 (55)	37 (55)	48 (72)	14
#7	42 (62)	54 (81)	54 (81)	70 (105)	17
#8	47 (71)	62 (92)	62 (92)	80 (120)	19
#9	54 (80)	70 (104)	70 (104)	90 (136)	21
#10	60 (90)	78 (117)	78 (117)	102 (153)	24
#11	67 (100)	87 (130)	87 (130)	113 (170)	27

NOTES:
1. USE THE LENGTHS IN THIS SCHEDULE, UNLESS NOTED OTHERWISE.
2. USE LENGTH IN ( ) WHEN BAR COVER IS db OR LESS OR BAR CLEAR SPACING IS 2db OR LESS.
3. A TOP BAR IS A HORIZONTAL BAR WITH MORE THAN 12" OF FRESH CONCRETE CAST BELOW IT.

ABBREVIATIONS
db = BAR DIAMETER
Ld = TENSION DEVELOPMENT LENGTH
Ldt = TENSION DEVELOPMENT LENGTH FOR A TOP BAR
Lb = CLASS B LAP SPLICE LENGTH, 1.3 Ld
Lbt = CLASS B LAP SPLICE LENGTH FOR A TOP BAR, 1.3 Ldt
Ldh = TENSION DEVELOPMENT LENGTH FOR A STANDARD HOOK

DEVELOPMENT AND SPLICE LENGTH SCHEDULE AND ABBREVIATIONS (C2)
SCALE: NO SCALE

FOOTING SCHEDULE				
MARK	SIZE	DEPTH	BOTTOM REINF	REMARKS
F1.5W	1'-6"W CONT	15"	(3) #4 CONT	
F2.0	2'-0"x2'-0"	10"	(3) #4 EA WAY	
F2.5	2'-6"x2'-6"	15"	(3) #5 EA WAY TOP & BOT	
F3.0	3-0"x3'-0"	12"	(3) #5 EA WAY	
F4.0	4-0"x4'-0"	12"	(4) #5 EA WAY	
F5.0	5-0"x5'-0"	14"	(5) #5 EA WAY	
F6.0	6-0"x6'-0"	14"	(6) #5 EA WAY	
F9.5	9-6"x9'-6"	15"	(12) #5 EA WAY	

NOTES:
1. FOUNDATIONS SHALL BEAR ON 2'-0" STRUCTURAL FILL PER SPECS. FILL TO EXTEND 2'-0" BEYOND EDGE OF FTG.

FOOTING SCHEDULE (C3)
SCALE: NO SCALE — S-111, S-121

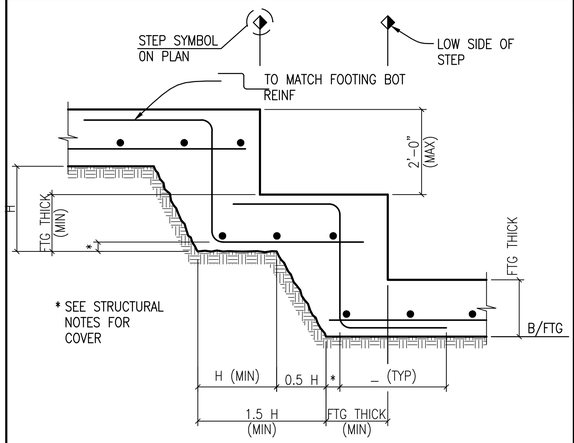

TYP STEPPED FOOTING DETAIL (C4)
SCALE: NO SCALE — S-111

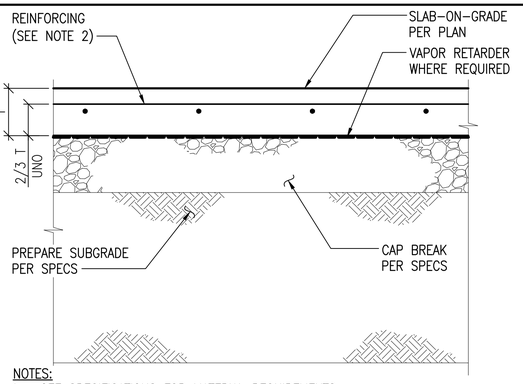

NOTES:
1. SEE SPECIFICATIONS FOR MATERIAL REQUIREMENTS.
2. FOR SLABS THICKER THAN 4", PLACE REINFORCING AT MID-DEPTH.

TYPICAL SLAB ON GRADE SECTION (B1)
NO SCALE — S-111

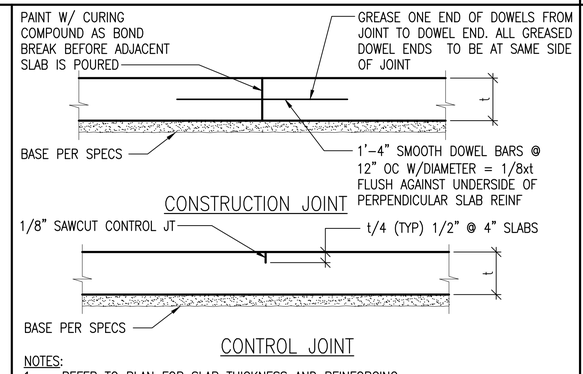

NOTES:
1. REFER TO PLAN FOR SLAB THICKNESS AND REINFORCING.
2. CONTROL JOINTS TO BE SPACED @ 15'-0" OC MAX, EACH WAY, UNO. RATIO OF DISTANCE BETWEEN CONTROL JOINTS IN EACH DIRECTION FOR A SLAB PANEL SHALL NOT EXCEED 1.5. CONSTRUCTION JOINTS PER THIS DETAIL SHALL BE CONSIDERED AS CONTROL JOINTS FOR CONTROL JOINT SPACING REQUIREMENTS.

TYPICAL SOG CONTROL & CONSTR JOINTS (B2)
NO SCALE — S-111

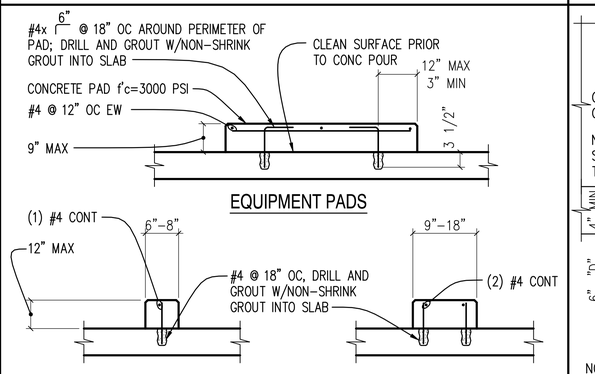

NOTES:
1. EQUIPMENT PAD SIZE TO BE 6" LARGER THAN EQUIPMENT IN EACH DIRECTION, UNO. COORDINATE EXACT SIZE AND LOCATION OF CURB AND PADS WITH EQUIPMENT PROVIDED.

TYP EQUIPMENT CURBS & PADS ON CONC SLABS (B3)
SCALE: NO SCALE — S-111

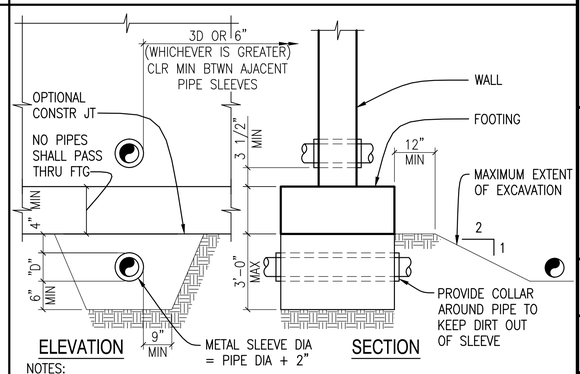

NOTES:
1. STEP FOOTING PER TYPICAL STEPPED FOOTING DETAIL AS REQUIRED TO SATISFY THESE CONDITONS.
2. GENERAL CONTRACTOR TO COORDINATE EXACT DEPTH AND LOCATION OF PIPE.
3. "D" SHALL NOT EXCEED 8".

TYP DETAIL OF PIPE AT FOOTINGS (B4)
SCALE: NO SCALE — S-111

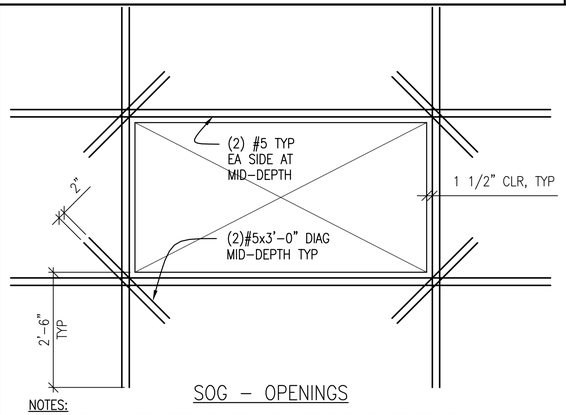

SOG - OPENINGS

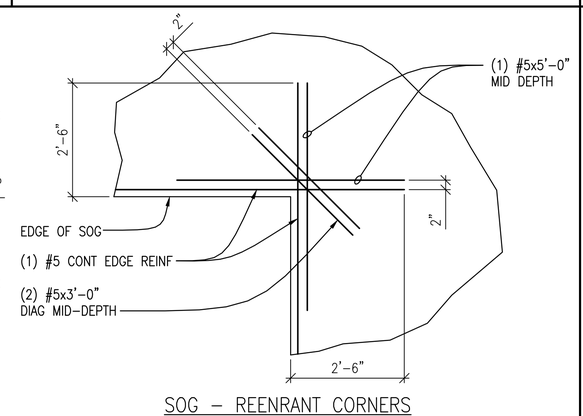

SOG - REENRANT CORNERS

NOTES:
1. REINF SHALL BE ADDED AT OPENINGS & RE-ENTRANT CORNERS OF REINFORCED & UNREINFORCED SLABS ON GRADE.

TYPICAL SLAB ON GRADE TRIM REINFORCING (A2)
NO SCALE — S-111

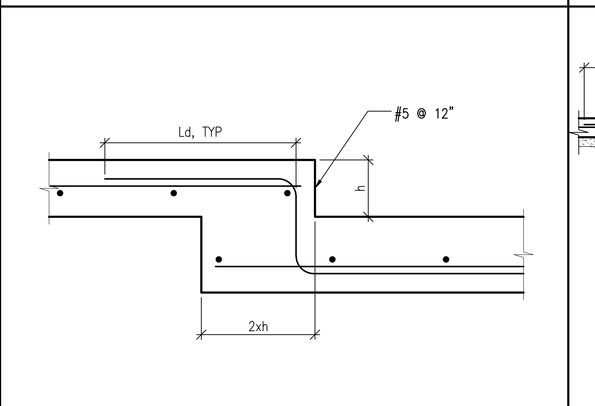

TYPICAL SLAB ON GRADE STEP (A3)
SCALE: NO SCALE — S-111

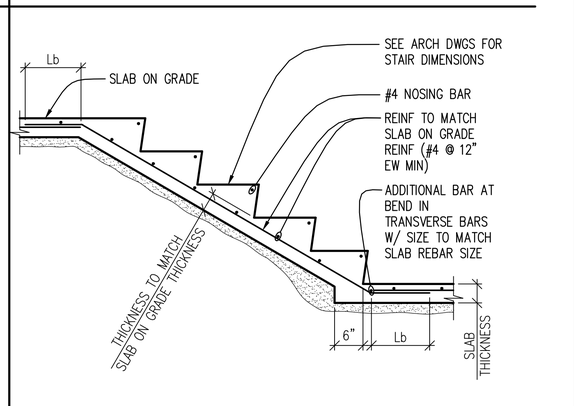

TYP STAIR ON GRADE DETAIL (A4)
SCALE: NO SCALE — S-121

kpff
Consulting Engineers
1601 Fifth Avenue, Suite 1600
Seattle, Washington 98101
(206) 622-5822
Fax (206) 622-8130

DEPARTMENT OF THE NAVY
NAVAL FACILITIES ENGINEERING COMMAND ~ NORTHWEST
NAVAL AIR STATION WHIDBEY ISLAND — AULT FIELD - OAK HARBOR, WA
NAVAL AIR STATION WHIDBEY ISLAND — OAK HARBOR, WA

FY-15 MCON PROJECT P-259 P-8A AIRCRAFT APRON EXPANSION - PART A

CONCRETE DETAILS

SCALE: AS NOTED
EPROJECT NO.:
CONSTR. CONTR. NO.: N44255-15-C-6003
NAVFAC DRAWING NO.: 16030418
SHEET 164 OF 302

S-511

DRAWFORM REVISION: 10 MARCH 2009

APPROVED FOR COMMANDER NAVFAC 3/2/15
ACTIVITY: NAS WHIDBEY ISLAND
SATISFACTORY TO DATE
DES: ZWV/MBC DRW: DYL CHK: GLV
<<PM/DM>>: JOSEPH KISIDAY
BRANCH MANAGER
CHIEF ENG/ARCH
<<XXX>>

GREGORY L. PARKEY — STATE OF WASHINGTON — 25842 — REGISTERED PROFESSIONAL ENGINEER — 12 FEB 15 — SEAL

APPR | DATE | DESCRIPTION | STM

Path: U:\114000-114350\114153.10 (P252 NASWI P8A Hangar - Part A)\04 Details\BLDGXXXX-MAXIMOA-S-511.dwg Plot date: Feb 13, 2015-06:30:00am CAD User: RandyF.
Xref Filename: | 3422 | NFM_SHEET_BORDER Part A | P252xBOXALL | VARNEY-NAVY | glv-signature-Wash - NAVFAC |

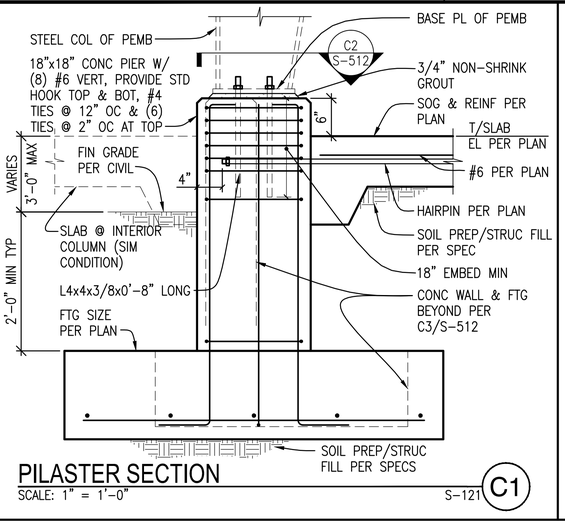

PILASTER SECTION

SCALE: 1" = 1'-0" — S-121 — C1

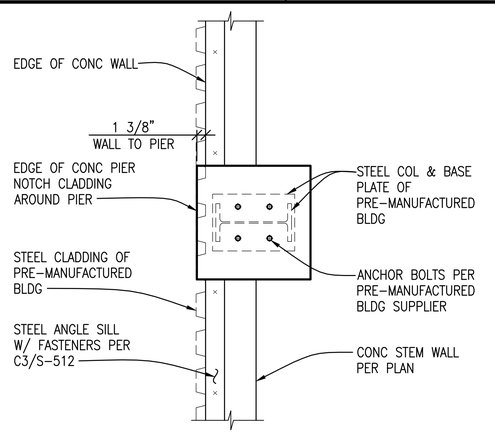

PILASTER PLAN

SCALE: 1" = 1'-0" — S-512 — C2

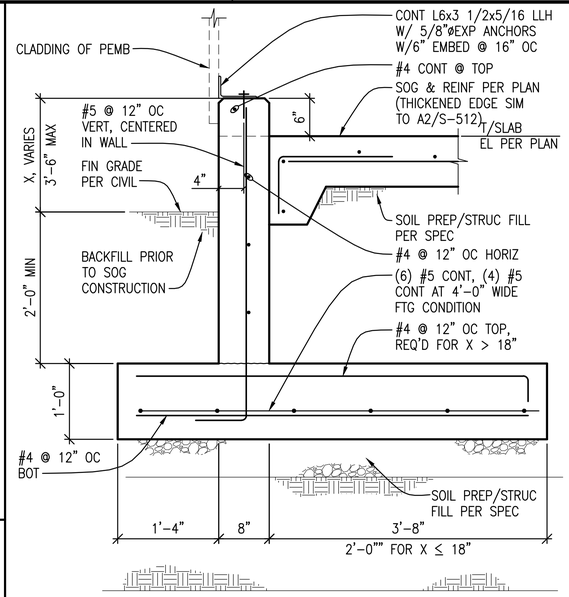

WALL SECTION

SCALE: 1" = 1'-0" — S-121, S-512 — C3

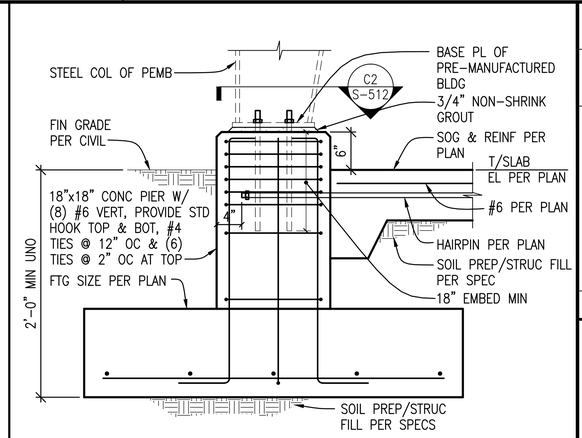

PILASTER SECTION - PUMP STATION

SCALE: 1" = 1'-0" — C4

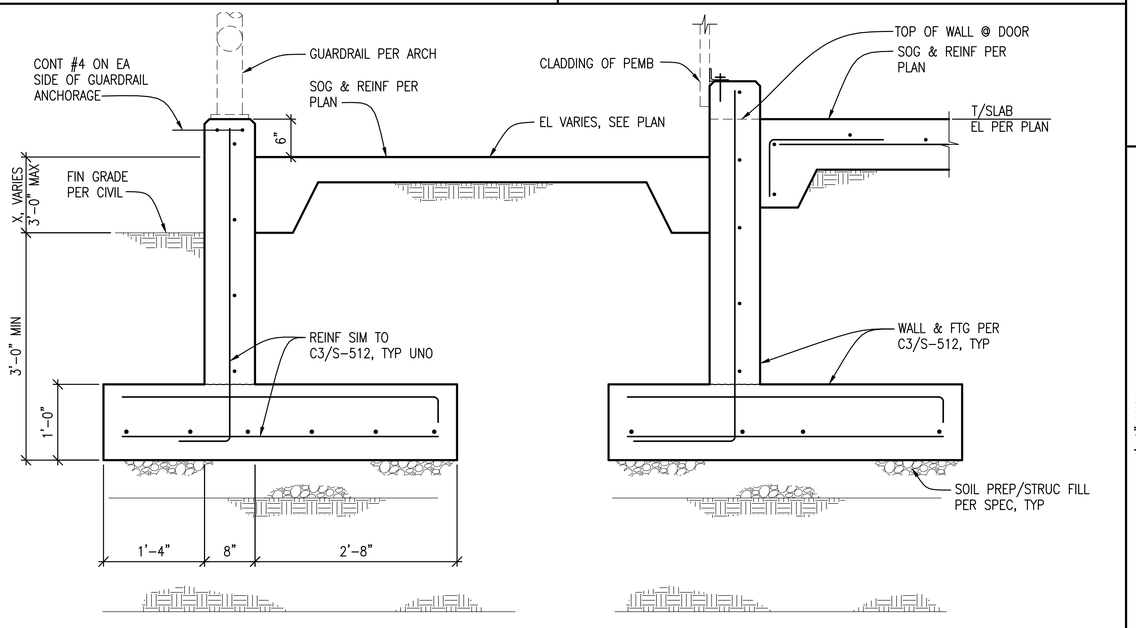

RAMP SECTION

SCALE: 1" = 1'-0" — S-121 — B2

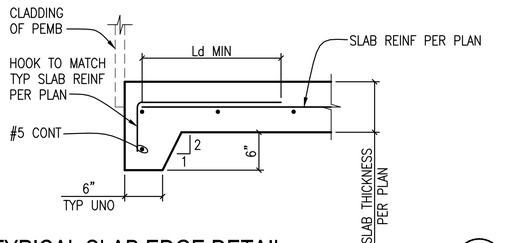

TYPICAL SLAB EDGE DETAIL

SCALE: 1" = 1'-0" — S-512 — A2

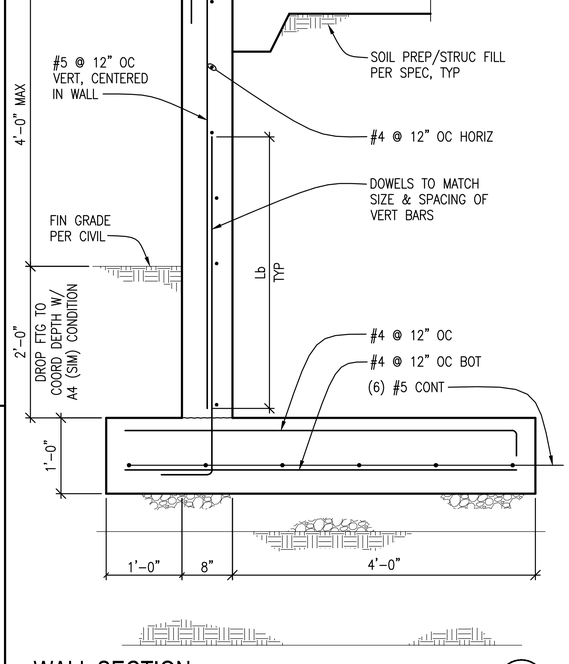

WALL SECTION

SCALE: 1" = 1'-0" — S-121 — A3

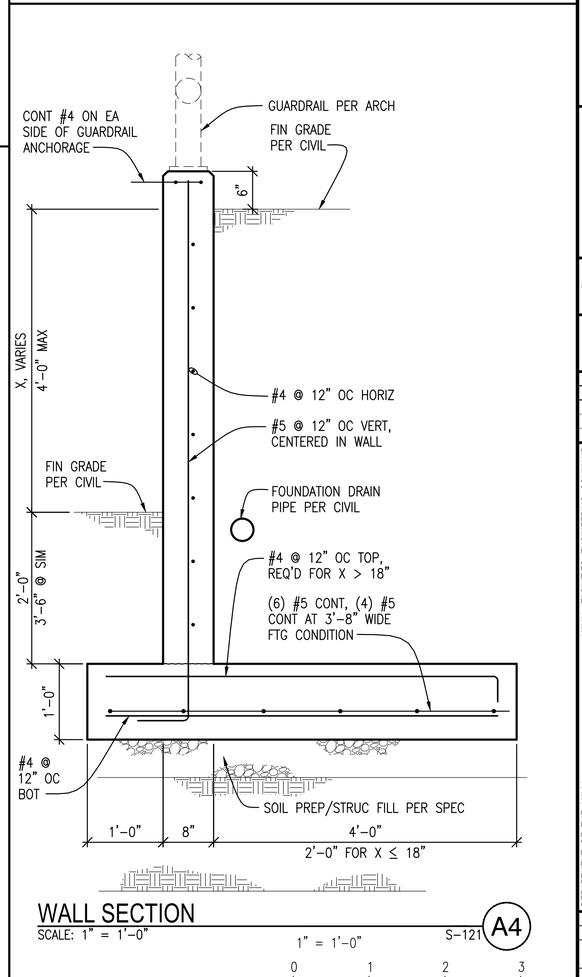

WALL SECTION

SCALE: 1" = 1'-0" — S-121 — A4

1" = 1'-0"

0 1 2 3

APPR | DATE | DESCRIPTION | SYM

NAVFAC

GREGORY L. PARRY — STATE OF WASHINGTON — 25842 — REGISTERED PROFESSIONAL ENGINEER — 12 FEB 15 — SEAL

kpff
Consulting Engineers
1601 Fifth Avenue, Suite 1600
Seattle, Washington 98101
(206) 622-5822
Fax (206) 622-8130

A/E INFO

APPROVED
FOR COMMANDER NAVFAC 3/2/15

ACTIVITY
NAS WHIDBEY ISLAND

SATISFACTORY TO DATE

DES: ZW/MBC | DRW: DYL | CHK: GLV

<<PM/DM>> JOSEPH KISIDAY

BRANCH MANAGER

CHIEF ENG/ARCH
<<XXX>>

DEPARTMENT OF THE NAVY
NAVAL FACILITIES ENGINEERING COMMAND
NAVAL AIR STATION WHIDBEY ISLAND

NAVAL FACILITIES ENGINEERING COMMAND ~ NORTHWEST
AULT FIELD - OAK HARBOR, WA

NAVAL AIR STATION WHIDBEY ISLAND — OAK HARBOR, WA

FY-15 MCON PROJECT P-259 P-8A AIRCRAFT APRON EXPANSION - PART A

CONCRETE DETAILS

SCALE: AS NOTED
EPROJECT NO.:
CONSTR. CONTR. NO.: N44255-15-C-6003
NAVFAC DRAWING NO.: 16030419
SHEET 165 OF 302

S-512

DRAWFORM REVISION: 10 MARCH 2009

Path: U:\114000-114350\114153.10 (P252 NAS\WI P8A Hangar - Part A)\04 Details\BLDGXXX-MAX\MOA-S-512.dwg Plot date: Feb 12, 2015-05:51:58pm CAD User: RandyF.
Xref Filename: | 3422 | NFM_SHEET_BORDER Part A | P252xBOXALL | VARNEY-NAVY | glv~signature-Wash - NAVFAC |

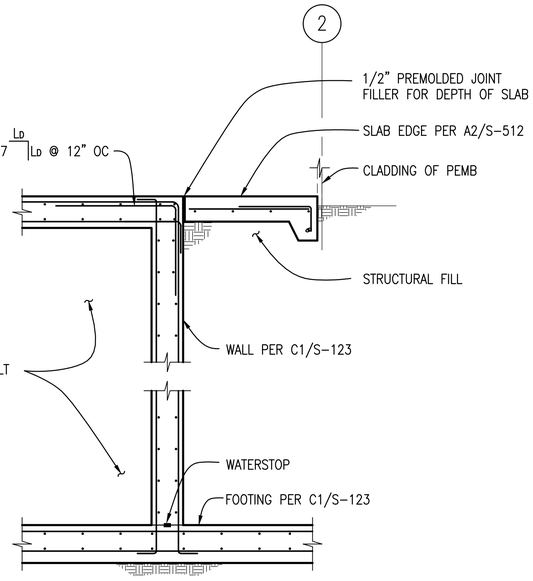

SECTION
1/2"=1'-0" — S-513 (B1)

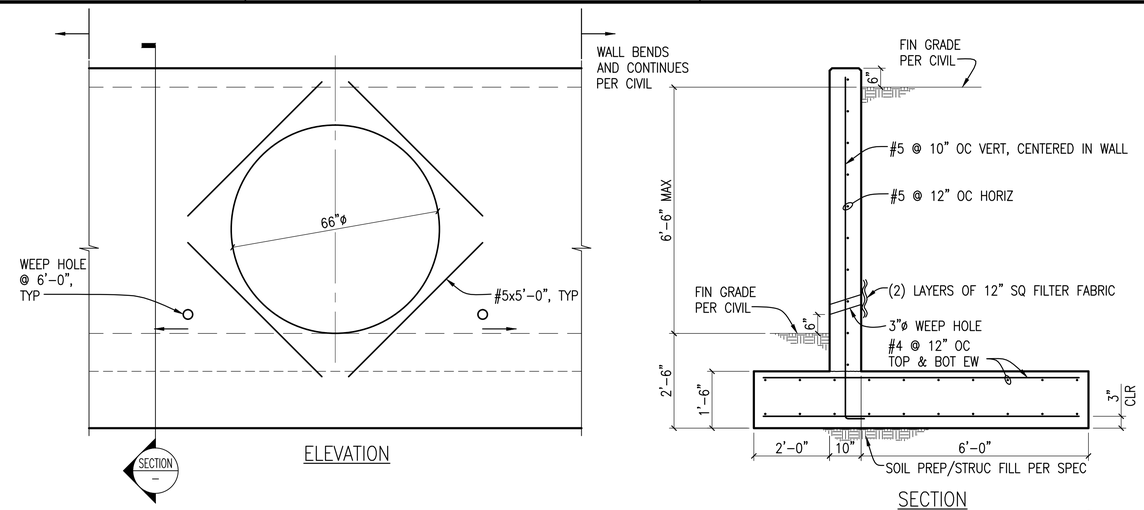

ELEVATION

SECTION

HEAD WALL SECTION
SCALE: 1/2" = 1'-0" — CG144 (C2)

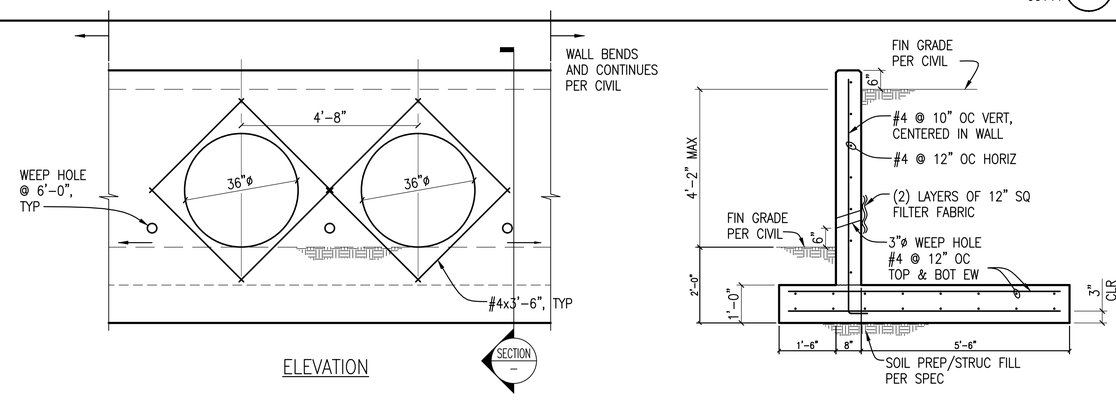

ELEVATION

SECTION

HEAD WALL SECTION
SCALE: 1/2" = 1'-0" — CG141 (B2)

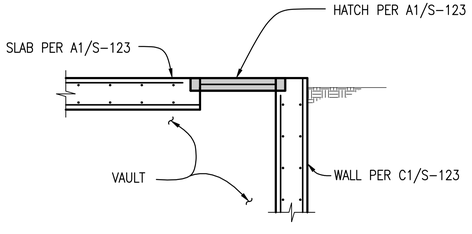

SECTION
1/2"=1'-0" — S-513 (A1)

1/2" = 1'-0"
0 1 2 4 6

APPR	
DATE	
DESCRIPTION	
SYM	

NAVFAC

GREGORY L. VARNEY — STATE OF WASHINGTON — 25842 — REGISTERED PROFESSIONAL ENGINEER — 12 Feb 15 — SEAL

kpff
Consulting Engineers
1601 Fifth Avenue, Suite 1600
Seattle, Washington 98101
(206) 622-5822
Fax (206) 622-8130
A/E INFO

APPROVED
FOR COMMANDER NAVFAC 3/2/15

ACTIVITY
NAS WHIDBEY ISLAND
SATISFACTORY TO DATE
DES: ZW/MBC | DRW: DYL | CHK: GLV
<<PM/DM>>: JOSEPH KISIDAY
BRANCH MANAGER
CHIEF ENG/ARCH
<<XXX>>

DEPARTMENT OF THE NAVY
NAVAL FACILITIES ENGINEERING COMMAND
NAVAL AIR STATION WHIDBEY ISLAND

NAVAL FACILITIES ENGINEERING COMMAND ~ NORTHWEST
AULT FIELD ~ OAK HARBOR, WA

NAVAL AIR STATION WHIDBEY ISLAND — OAK HARBOR, WA

FY-15 MCON PROJECT P-259 P-8A AIRCRAFT APRON EXPANSION - PART A

CONCRETE DETAILS

SCALE: AS NOTED
EPROJECT NO.:
CONSTR. CONTR. NO.: N44255-15-C-6003
NAVFAC DRAWING NO.: 16030420
SHEET 166 OF 302

S-513

DRAWFORM REVISION: 10 MARCH 2009

Path: U:\114000-114350\114153.10 (P252 NAS\WI P8A Hangar - Part A)\04 Details\BLDGXXXX-MAX\MOA-S-513.dwg Plot date: Feb 12, 2015-05:52:06pm CAD User: RandyF.
Xref Filename: | 3422 | NFM_SHEET_BORDER Part A | P252xBOXALL | VARNEY-NAVY | glv-signature-Wash - NAVFAC |

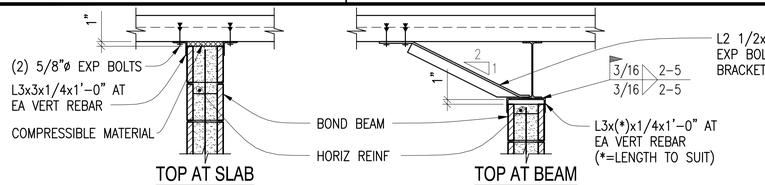

TOP AT SLAB

TOP AT BEAM

L2 1/2x2 1/2x3/8 BEAM BRACE W/ (2) 5/8"ø EXP BOLTS INTO SLAB. LOCATE OVER WALL BRACKET L'S AT SPACINGS AS FOLLOWS:

SP = 4'-0" WHERE bf < 5 1/2"
= 8'-0" WHERE 5 1/2" ≤ bf < 8"
= 12'-0" WHERE bf ≥ 8""

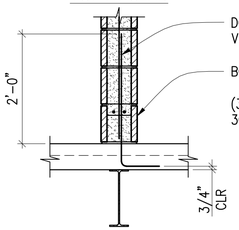

BOTTOM AT COMPOSITE SLAB

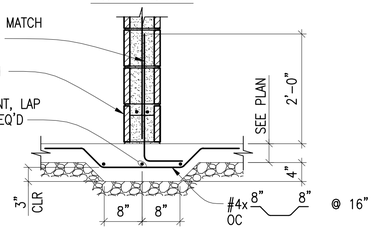

BOTTOM AT SLAB ON GRADE

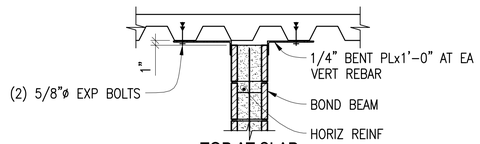

TOP AT SLAB
DECK PERPENDICULAR

NOTE:
THIS DETAIL TO BE USED ONLY IN PARTITION LOCATIONS APPROVED BY CONTRACTING OFFICER.

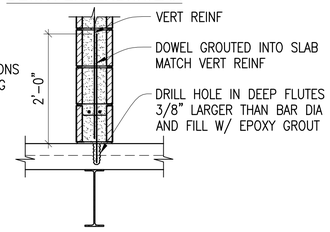

ALT BOTTOM ANCHORAGE

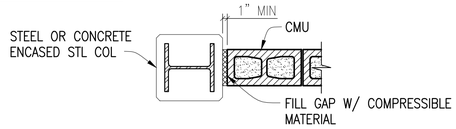

PLAN - CMU WALL END AT COLUMM

NOTES:
1. DO NOT DRILL AND GROUT DOWELS INTO SLAB ON CANTILEVER WALLS.

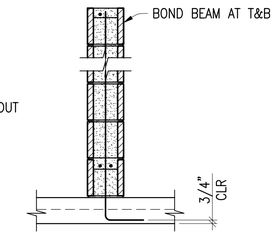

CANTILEVER WALLS
LESS THAN 5'-0" IN HEIGHT

SEE TYPICAL CMU WALL REINFORCEMENT SCHEDULE C4/S-521 FOR REINFORCING SIZE SPACING, UNO

TYPICAL CMU PARTITION DETAILS

SCALE: NO SCALE — S-111 (B2)

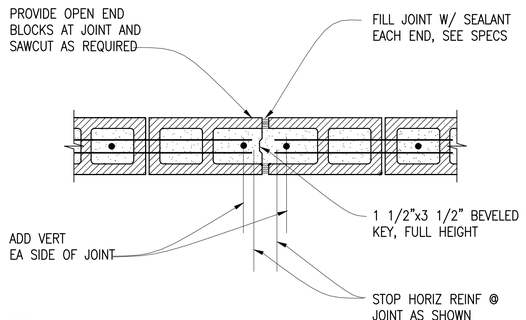

NOTES:
1. PROVIDE JOINTS AT INTERVALS NOT TO EXCEED 25 FEET EXCEPT AS NOTED.
2. HORIZONTAL REINFORCING AT FLOOR AND ROOF LINES SHALL BE CONTINUOUS THROUGH JOINT.

TYPICAL CMU WALL CONTROL JOINT - PLAN

NO SCALE — S-111 (A1)

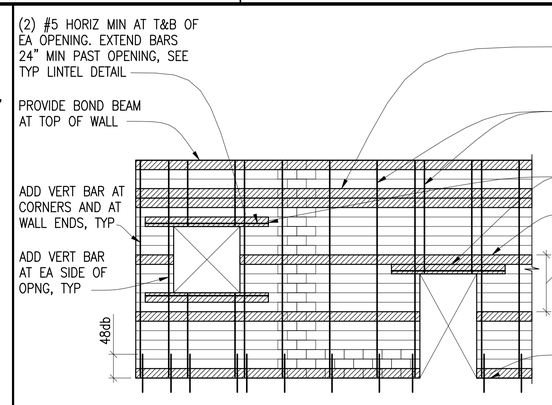

ELEVATION

TYPICAL CMU WALL REINFORCEMENT			
WALL THICKNESS	MAXIMUM HEIGHT	VERTICAL REINFORCEMENT	HORIZONTAL REINFORCEMENT
8"	14 FEET	#5 @ 32" OC	(2) #4 @ 48" OC
8"	19 FEET	#5 @ 24" OC	(2) #4 @ 48" OC

NOTES:
1. THIS DETAIL PROVIDES MINIMUM REINFORCEMENT, UNO. MORE STRINGENT SPECIFIC DETAILS SHALL TAKE PRECEDENT OVER THESE MINIMUMS.
2. THIS DETAIL APPLIES FOR RUNNING BOND ONLY.
3. SEE STRUCTURAL NOTES FOR ADDITIONAL INFORMATION.
4. MINIMUM BAR AND DOWEL LAP LENGTHS TO BE 48db (2'-0" MIN), UNO.
5. ALL CELLS SHALL BE SOLID GROUTED, UNO

TYPICAL CMU WALL REINFORCEMENT

SCALE: NO SCALE — S-111 (C4)

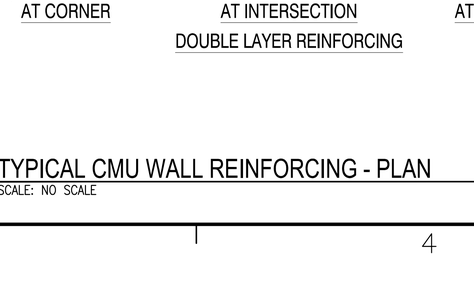

SECTION

CMU LINTEL BEAM REINFORCEMENT				
MIN DEPTH	TOP BARS	BOT BARS	STIRRUPS	REMARKS
16"	(2)#5	(2)#5	#4 @ 8"	MAX SPAN = 6'-0"
32"	(2)#5	(2)#5	#4 @ 8"	MAX SPAN = 8'-0"
60"	(2)#6	(2)#6	#4 @ 8"	MAX SPAN = 12'-0"

NOTES:
1. TOP BARS TO RUN CONTINUOUS OVER OPENINGS LESS THAN 4'-0" APART. LAP BARS AT MID-SPAN OF OPENING WHERE REQUIRED. EXTEND BARS 40db OR 2'-0" MIN PAST EDGE OF LAST OPENING AND THEN LAP WITH WALL BOND BEAM BARS.

TYPICAL CMU LINTEL BEAM

SCALE: NO SCALE — S-111 (B4)

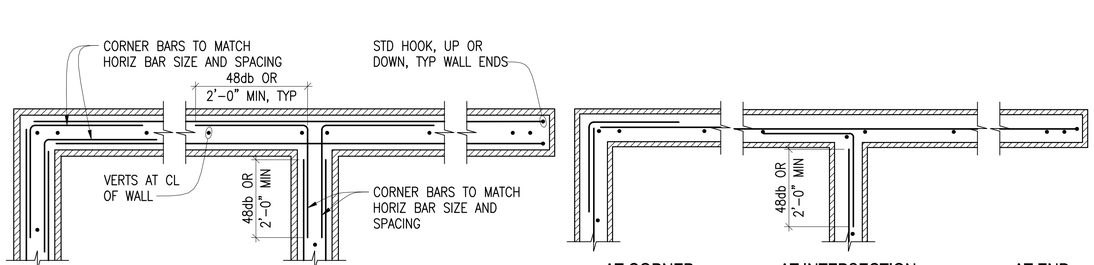

TYP CMU WALL REINF - PLAN

TYPICAL CMU WALL REINFORCING - PLAN

SCALE: NO SCALE — S-111 (A4)

DEPARTMENT OF THE NAVY	NAVAL FACILITIES ENGINEERING COMMAND ~ NORTHWEST
NAVAL AIR STATION WHIDBEY ISLAND	NAVAL FACILITIES ENGINEERING COMMAND AULT FIELD ~ OAK HARBOR, WA
NAVAL AIR STATION WHIDBEY ISLAND	OAK HARBOR, WA
FY-15 MCON PROJECT P-259 P-8A AIRCRAFT APRON EXPANSION - PART A	MASONRY DETAILS
SCALE: AS NOTED	
EPROJECT NO.:	
CONSTR CONTR. NO.	N44255-15-C-6003
NAVFAC DRAWING NO.	16030421
SHEET 167 OF 302	S-521

DRAWFORM REVISION: 10 MARCH 2009

Consulting Engineers
1601 Fifth Avenue, Suite 1600
Seattle, Washington 98101
(206) 622-5822
Fax (206) 622-8130

APPROVED FOR COMMANDER NAVFAC 3/2/15
ACTIVITY: NAS WHIDBEY ISLAND
SATISFACTORY TO DATE
DES: ZWV/MBG DRW: DYL CHK: GLV
<<PM/DM>>: JOSEPH KISIDAY
BRANCH MANAGER
CHIEF ENG/ARCH
<<XXX>>

GREGORY L. VARNEY — STATE OF WASHINGTON — 25842 REGISTERED PROFESSIONAL ENGINEER — 17 Feb 15 — SEAL

APPR | DATE | NO | DESCRIPTION | STM

Path: U:\114000-114350\114153.10 (P252 NASWI P8A Hangar - Part A)\04 Details\BLDGXXXX-MAXIMOA-S-521.dwg Plot date: Feb 12, 2015-05:52:15pm CAD User: RandyF.
Xref Filename: | 3422 | NFM_SHEET_BORDER Part A | P252xBOXALL | VARNEY-NAVY | glv-signature-Wash - NAVFAC |

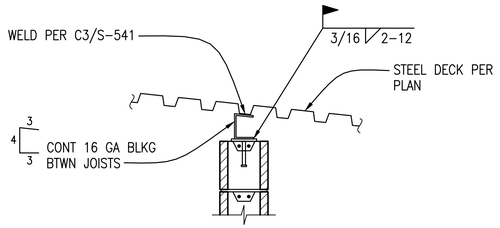

JOIST BLKG BEYOND

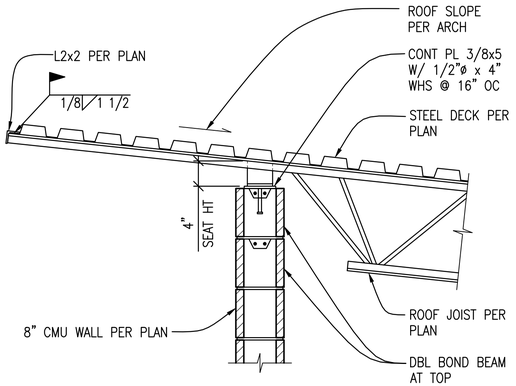

NOTE:
1. ROOF SLOPES THE OPPOSITE DIRECTION @ SIM CONDITION.

EXTERIOR WALL SECTION
SCALE: 1" = 1'-0" — S-111 — B1

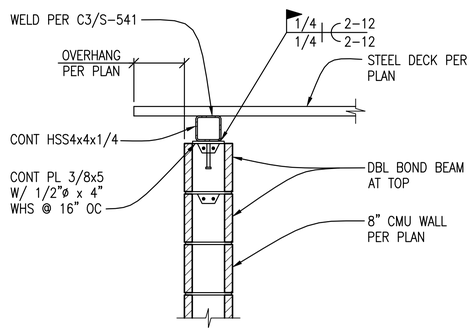

EXTERIOR WALL SECTION
SCALE: 1" = 1'-0" — S-111, S-522 — B2

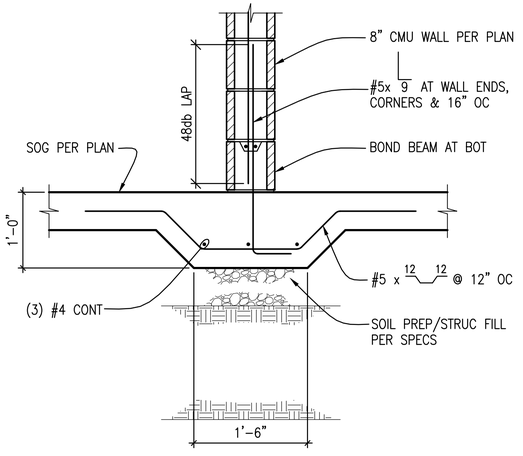

INTERIOR FOOTING SECTION
SCALE: 1" = 1'-0" — S-111 — A3

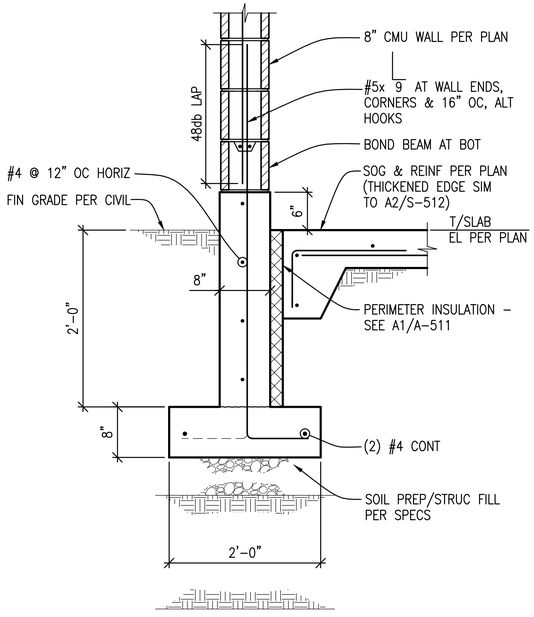

EXTERIOR FOOTING SECTION
SCALE: 1" = 1'-0" — S-111 — A4

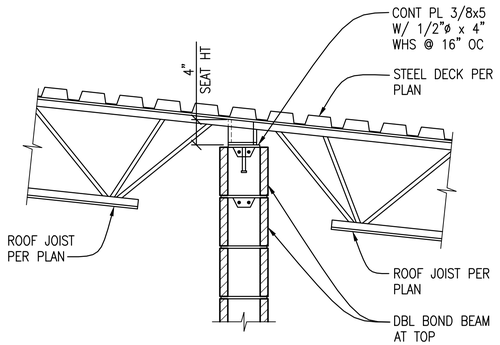

NOTE:
1. SEE B1/S-522 FOR "JOIST BLKG BEYOND" INFO.

INTERIOR WALL SECTION
SCALE: 1" = 1'-0" — S-111 — A1

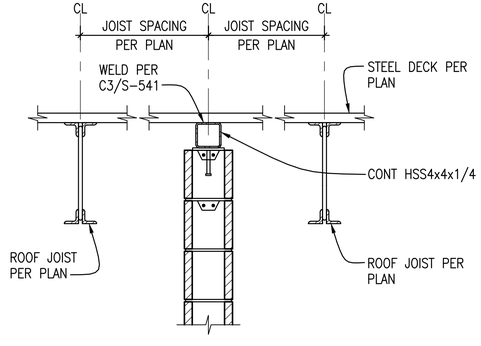

NOTE:
1. SEE B2/S-522 FOR ADDITIONAL INFO.

INTERIOR WALL SECTION
SCALE: 1" = 1'-0" — S-111 — A2

1" = 1'-0"

0 1 2 3

				APPR
				DATE
				DESCRIPTION
				STM

NAVFAC

GREGORY L. VARNEY — STATE OF WASHINGTON — 25842 — REGISTERED PROFESSIONAL ENGINEER — 12 FEB 15 — SEAL

kpff
Consulting Engineers
1601 Fifth Avenue, Suite 1600
Seattle, Washington 98101
(206) 622-5822
Fax (206) 622-8130

A/E INFO

APPROVED
FOR COMMANDER NAVFAC 3/12/15
ACTIVITY
NAS WHIDBEY ISLAND
SATISFACTORY TO DATE
DES: ZW/MBC DRW: DYL CHK: GLV
<<PM/DM>> JOSEPH KISIDAY
BRANCH MANAGER
CHIEF ENG/ARCH
<<XXX>>

DEPARTMENT OF THE NAVY
NAVAL FACILITIES ENGINEERING COMMAND
NAVAL AIR STATION WHIDBEY ISLAND

NAVAL FACILITIES ENGINEERING COMMAND – NORTHWEST
AULT FIELD – OAK HARBOR, WA
NAVAL AIR STATION WHIDBEY ISLAND — OAK HARBOR, WA

FY-15 MCON PROJECT P-259 P-8A AIRCRAFT APRON EXPANSION - PART A

MASONRY DETAILS

SCALE: AS NOTED
EPROJECT NO.:
CONSTR. CONTR. NO.
N44255-15-C-6003
NAVFAC DRAWING NO.
16030422
SHEET 168 OF 302

S-522

DRAWFORM REVISION: 10 MARCH 2009

Path: U:\114000-114350\114153.10 (P252 NASWI P8A Hangar - Part A)\04 Details\BLDGXXXX-MAXIMOA-S-522.dwg Plot date: Feb 12, 2015-05:52:25pm CAD User: RandyF.
Xref Filename: | 3422 | NFM_SHEET_BORDER Part A | P252xBOXALL | VARNEY-NAVY | giv-signature-Wash - NAVFAC |

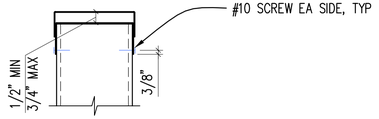

SECTION A-A

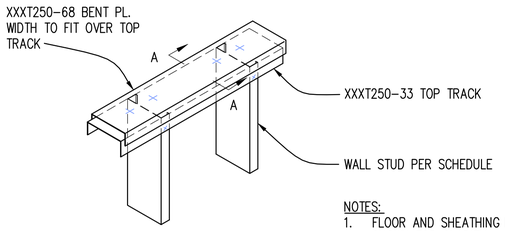

NOTES:
1. FLOOR AND SHEATHING NOT SHOWN FOR CLARITY.
2. SEE B2/S-531 FOR TOP TRACK SPLICE.

TYPICAL TRACK AND STUD

NO SCALE S-531 C1

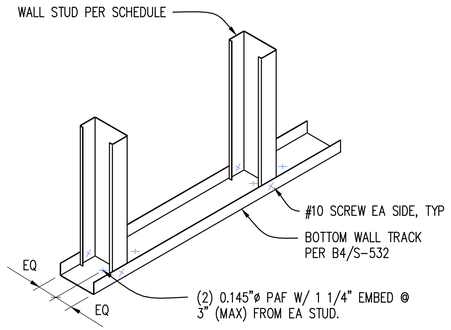

NOTES:
1. FLOOR AND SHEATHING NOT SHOWN FOR CLARITY.

TYPICAL TRACK AND STUD

NO SCALE S-531 C2

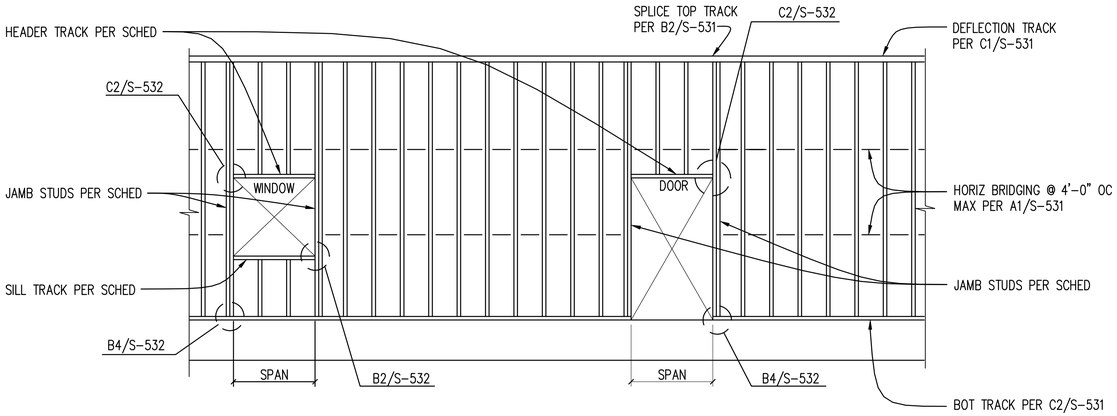

ELEVATION

STUD FRAMING SCHEDULE

TYPICAL STUD	MAX HEIGHT		DOOR OPENINGS		WINDOW OR OPENINGS	
			SPAN ≤ 4'-0"	4'-0" ≤ SPAN < 7'-0"	SPAN ≤ 4'-0"	4'-0" ≤ SPAN < 7'-0"
362S162-54 @ 16" OC	18 FT	JAMB	(2) 362S162-54	(2) 362S162-54	(2) 362S162-54	(2) 362S162-54
		HEADER	(1) 362S162-54	(1) 362S162-54 W/ (1) 362S162-54	(1) 362T162-54	(1) 362S162-54 W/ (1) 362S162-54
		SILL	–	–	362T162-54	362T162-54

NOTES:
1. INTERIOR NON-BEARING PARTITION WALLS ARE NOT SHOWN ON STRUCTURAL PLANS. COORDINATE WALL EXTENTS & LOCATION W/ ARCH.
2. TOP AND BOTTOM TRACKS SHALL MATCH STUD THICKNESS W/ 2 1/2" MINIMUM. LEGS AT TOP TRACK AND 1 1/4" MIN LEGS AT BOTTOM TRACK.
3. COORDINATE STUD WALL THICKNESS W/ARCH.
4. WHERE MAX HEIGHT IS EXCEEDED, DOUBLED (BACK-TO-BACK) STUDS CAN BE USED UP TO A HEIGHT OF 1.33x MAX HEIGHT PER SCHEDULE.
5. WHERE HEADER OR SILL SPAN EXCEEDS 7'-0", SEE C3/S-532 AND B3/S-532 FOR HEADER AND SILL DETAILS RESPECTIVELY.

TYPICAL METAL STUD WALL SCHEDULE AND ELEVATION

NO SCALE S-531, S-532 B4

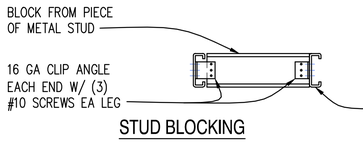

STUD BLOCKING

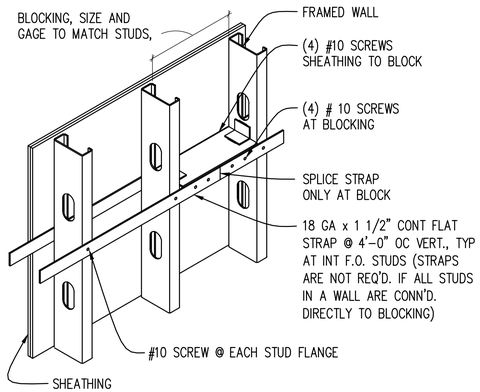

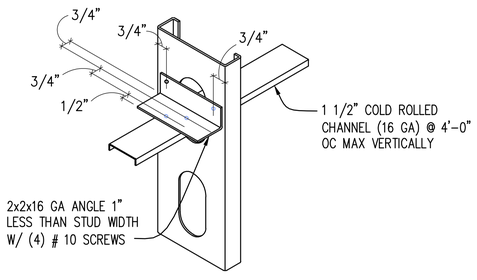

ALTERNATE

TYPICAL STUD HORIZONTAL BRIDGING

NO SCALE S-531 A1

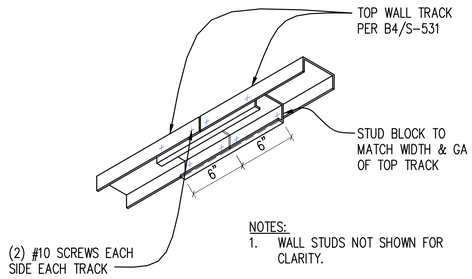

NOTES:
1. WALL STUDS NOT SHOWN FOR CLARITY.

TYPICAL TOP TRACK SPLICE CONNECTION

NO SCALE S-531 B2

kpff
Consulting Engineers
1601 Fifth Avenue, Suite 1600
Seattle, Washington 98101
(206) 622-5822
Fax (206) 622-8130

A/E INFO

APPROVED
FOR COMMANDER NAVFAC 3/2/15

ACTIVITY
NAS WHIDBEY ISLAND

SATISFACTORY TO DATE

DES	DRW	CHK
ZWV/MBG	DYL	GLV

<<PM/DM>> JOSEPH KISIDAY
BRANCH MANAGER
CHIEF ENG/ARCH
<<XXX>>

DEPARTMENT OF THE NAVY
NAVAL FACILITIES ENGINEERING COMMAND ~ NORTHWEST
NAVAL AIR STATION WHIDBEY ISLAND

NAVAL FACILITIES ENGINEERING COMMAND
AULT FIELD - OAK HARBOR, WA

NAVAL AIR STATION WHIDBEY ISLAND
OAK HARBOR, WA

FY-15 MCON PROJECT P-259 P-8A AIRCRAFT APRON EXPANSION - PART A

TYPICAL COLD-FORMED STEEL DETAILS

SCALE: AS NOTED
EPROJECT NO.:
CONSTR. CONTR. NO.: N4255-15-C-6003
NAVFAC DRAWING NO.: 16030423
SHEET 169 OF 302

S-531

DRAWFORM REVISION: 10 MARCH 2009

APPR	DATE	DESCRIPTION	SYM

Path: U:\114000-114350\114153.10 (P252 NASWI P8A Hangar - Part A)\04 Details\BLDGXXXX-MAXIMOA-S-531.dwg Plot date: Feb 13, 2015-11:34:43am CAD User: RandyF.
Xref Filename: | 3422 | NFM_SHEET_BORDER Part A | P252xBOXALL | VARNEY-NAVY | glv-signature-Wash - NAVFAC |

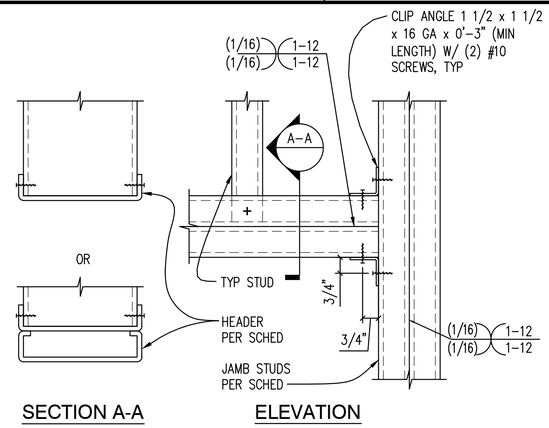

HEADER DETAIL

NO SCALE S-531 C2

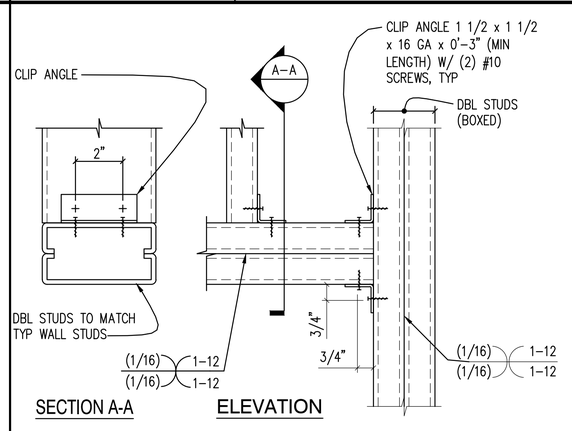

HEADER DETAIL (SPAN > 7'-0")

NO SCALE S-531 C3

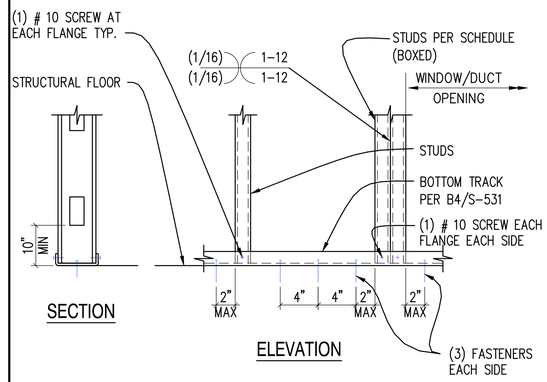

TYPICAL BOTTOM TRACK

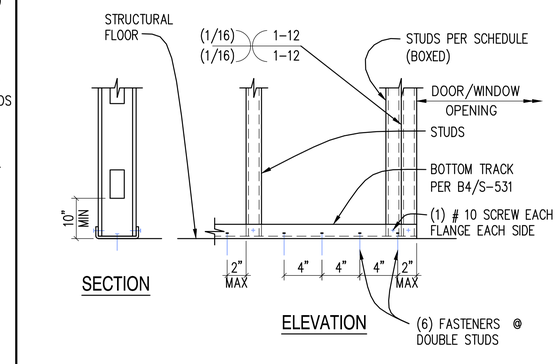

TYPICAL BOTTOM TRACK AT DOOR OPENINGS

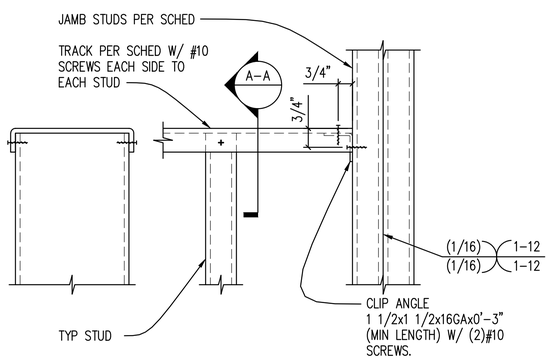

SILL DETAIL

NO SCALE S-531 B2

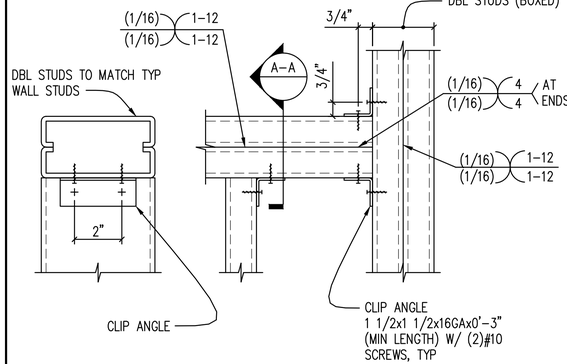

SILL DETAIL (SPAN > 7'-0")

NO SCALE S-531 B3

TYPICAL BOTTOM TRACK AT DOOR OPENINGS

BOTTOM TRACK CONNECTION AT JAMB

NO SCALE S-531 B4

	APPR	DATE	DESCRIPTION	STM

NAVFAC

GREGORY L. VARNEY — STATE OF WASHINGTON — 25842 — REGISTERED PROFESSIONAL ENGINEER — 12 Feb 15 — SEAL

kpff
Consulting Engineers
1601 Fifth Avenue, Suite 1600
Seattle, Washington 98101
(206) 622-5822
Fax (206) 622-8130

A/E INFO

APPROVED
FOR COMMANDER NAVFAC 3/2/15

ACTIVITY
NAS WHIDBEY ISLAND
SATISFACTORY TO DATE
DES ZWV/MBG DRW DYL CHK GLV
<<PM/DM>> JOSEPH KISIDAY
BRANCH MANAGER
CHIEF ENG/ARCH
<<XXX>>

DEPARTMENT OF THE NAVY
NAVAL FACILITIES ENGINEERING COMMAND ~ NORTHWEST
NAVAL AIR STATION WHIDBEY ISLAND AULT FIELD - OAK HARBOR, WA

NAVAL AIR STATION WHIDBEY ISLAND OAK HARBOR, WA
FY-15 MCON PROJECT P-259 P-8A AIRCRAFT APRON EXPANSION - PART A

TYPICAL COLD-FORMED STEEL DETAILS

SCALE: AS NOTED
EPROJECT NO.:
CONSTR. CONTR. NO.
N44255-15-C-6003
NAVFAC DRAWING NO.
16030424
SHEET 170 OF 302

S-532

DRAWFORM REVISION: 10 MARCH 2009

Path: U:\114000-114350\114153.10 (P252 NASWI P8A Hangar - Part A)\04 Details\BLDGXXXX-MAXIMOA-S-532.dwg Plot date: Feb 12, 2015-05:52:45pm CAD User: RandyF.
Xref Filename: | 3422 | P252xBOXALL | NFM_SHEET_BORDER Part A | VARNEY-NAVY | glv-signature-Wash - NAVFAC |

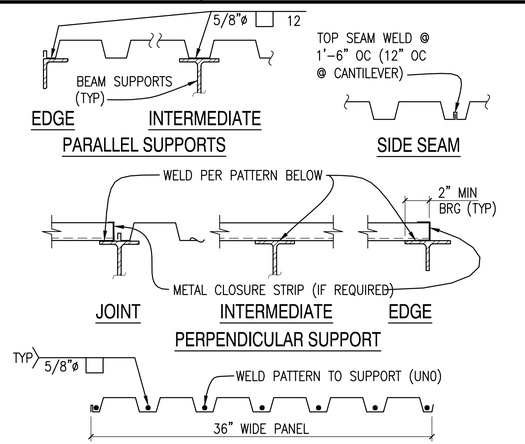

TYP DECK WELD PATTERN

NO SCALE — S-522 — C3

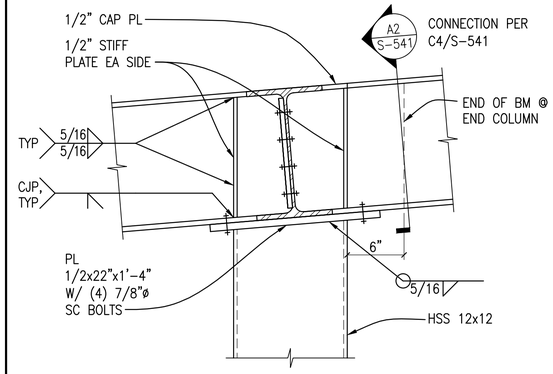

TYPICAL MOMENT CONNECTION @ COLUMN

NO SCALE — S-111 — B3

STANDARD BOLTED CONNECTION SCHEDULE			
BEAM SIZE	NUMBER & SIZE OF BOLTS REQ'D	PLATE THICKNESS	WELD SIZE (W)
W14, C15	(3) 7/8"ø	1/4"	3/16"
W10	(2) 7/8"ø	1/4"	3/16"

NOTE:
1. SHORT SLOTTED HOLES MAY BE USED AS AN OPTION.

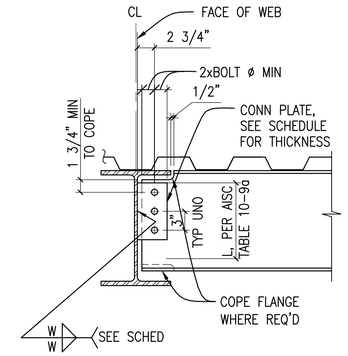

BEAM TO BEAM

STANDARD BOLTED BEAM CONNECTIONS

NO SCALE — S-541 — C4

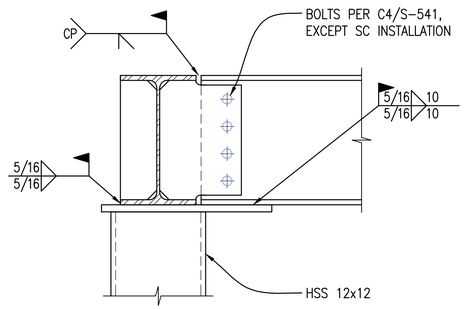

MOMENT CONNECTION AT COLUMN

NO SCALE — S-111 — A2

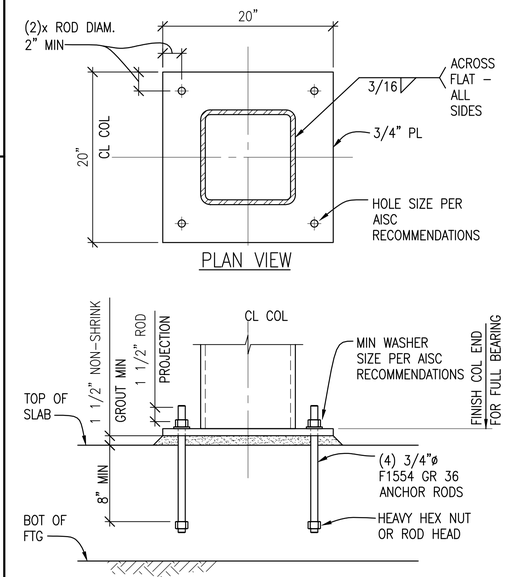

COLUMN BASE PLATE TYPE BP-1

NO SCALE — S-111 — A4

APPR	
DATE	
DESCRIPTION	
SYM	

NAVFAC

GREGORY L. BARTLEY — STATE OF WASHINGTON — 25842 — REGISTERED PROFESSIONAL ENGINEER — 12 Feb 15 — SEAL

kpff
Consulting Engineers
1601 Fifth Avenue, Suite 1600
Seattle, Washington 98101
(206) 622-5822
Fax (206) 622-8130

A/E INFO

APPROVED
FOR COMMANDER NAVFAC 3/2/15

ACTIVITY
NAS WHIDBEY ISLAND

SATISFACTORY TO DATE

DES: ZWV/MBC | DRW: DYL | CHK: GLV

<<PM/DM>> JOSEPH KISIDAY

BRANCH MANAGER

CHIEF ENG/ARCH

<<XXX>>

DEPARTMENT OF THE NAVY
NAVAL FACILITIES ENGINEERING COMMAND
NAVAL AIR STATION WHIDBEY ISLAND

NAVAL FACILITIES ENGINEERING COMMAND ~ NORTHWEST
AULT FIELD - OAK HARBOR, WA

NAVAL AIR STATION WHIDBEY ISLAND
OAK HARBOR, WA

FY-15 MCON PROJECT P-259 P-8A AIRCRAFT APRON EXPANSION - PART A

TYPICAL STEEL DETAILS

SCALE: AS NOTED

EPROJECT NO.:

CONSTR. CONTR. NO.
N44255-15-C-6003

NAVFAC DRAWING NO.
16030425

SHEET 171 OF 302

S-541

DRAWFORM REVISION: 10 MARCH 2009

Path: U:\114000-114350\114153.10 (P252 NASWI P8A Hangar - Part A)\04 Details\BLDGXXXX-MAXIMOA-S-541.dwg Plot date: Feb 12, 2015-05:52:56pm CAD User: RandyF.
Xref Filename: | 3422 | NFM_SHEET_BORDER Part A | P252xBOXALL | VARNEY-NAVY | glv-signature-Wash - NAVFAC |

GENERAL NOTES

1. ALL WORK SHALL CONFORM TO THE INTERNATIONAL BUILDING CODE (IBC), 2012 EDITION & NATIONAL FIRE PROTECTION ASSOCIATION (NFPA) 101, 2012 EDITION.
2. SEE CIVIL DRAWINGS IN CONJUNCTION WITH REFERENCE DRAWINGS FOR SCOPE OF BUILDING DEMOLITION. SEE HAZARDOUS MATERIALS REPORTS & DRAWINGS PRIOR TO DEMOLITION WORK.
3. ALL WORK SHOWN IS NEW UNLESS NOTED OTHERWISE.
4. ALL WORK SHOWN ON ONE PART OF THE DRAWINGS SHALL APPLY TO OTHER SIMILAR LOCATIONS & CONDITIONS ON OTHER PARTS OF THE DRAWINGS UNLESS NOTED OTHERWISE.
5. PROVIDE FIRESTOPPING AT PENETRATIONS THROUGH FIRE RATED WALLS. F RATING SHALL MATCH WALL FIRE RATINGS. SEE FLOOR PLAN FOR WALL FIRE RATINGS.
6. VERIFY ALL DIMENSIONS & SITE CONDITIONS PRIOR TO MATERIAL FABRICATION AND CONSTRUCTION.
7. FIRE EXTINGUISHERS SHOWN ON THE DRAWINGS ARE GOVERNMENT FURNISHED / GOVERNMENT INSTALLED. FIRE EXTINGUISHER CABINETS SHOWN ON THE DRAWINGS ARE CONTRACTOR FURNISHED / CONTRACTOR INSTALLED. COORDINATE FIRE EXTINGUISHER CABINET TYPES & SIZES WITH FIRE EXTINGUISHER TYPES & SIZES.

ARCHITECTURAL INDEX

DRAWING #	DRAWING TITLE
A-001	GENERAL NOTES, INDEX, SYMBOLS, LEGEND & ABBREVIATIONS
A-111	LOX PLANT – FLOOR & ROOF PLANS
A-121	SONOBUOY ISSUE/STORAGE FACILITY – FLOOR PLAN
A-122	SONOBUOY ISSUE/STORAGE FACILITY – ROOF PLAN
A-131	AIRCRAFT RINSE FACILITY PUMP STATION – PLANS, ELEVATIONS, SECTION & SCHEDULES
A-211	LOX PLANT – EXTERIOR ELEVATIONS
A-221	SONOBUOY ISSUE/STORAGE FACILITY – EXTERIOR ELEVATIONS
A-311	LOX PLANT – BUILDING SECTIONS
A-321	SONOBUOY ISSUE/STORAGE FACILITY – BUILDING SECTIONS
A-411	LOX PLANT – ENLARGED PLANS & INTERIOR ELEVATIONS
A-421	SONOBUOY ISSUE/STORAGE FACILITY – ENLARGED PLANS & INTERIOR ELEVATIONS
A-422	SONOBUOY ISSUE/STORAGE FACILITY – ENLARGED PLAN, ELEVATION & SECTION
A-511	LOX PLANT – WALL SECTIONS
A-512	LOX PLANT – DETAILS
A-513	LOX PLANT – DETAILS
A-521	SONOBUOY ISSUE/STORAGE FACILITY – DETAILS
A-601	SIGN, DOOR, WINDOW, WALL TYPES & LOUVER SCHEDULE
A-611	LOX PLANT – SCHEDULES
A-621	SONOBUOY ISSUE/STORAGE FACILITY – SCHEDULES

SYMBOLS

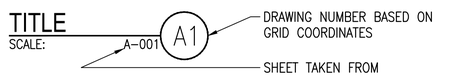

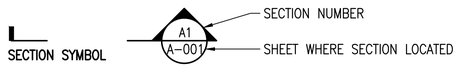

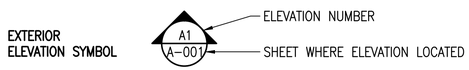

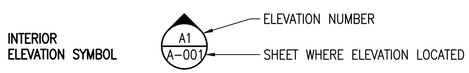

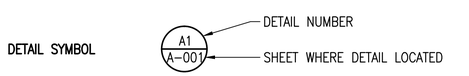

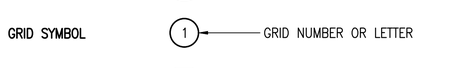

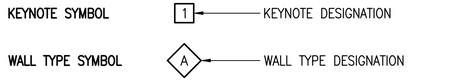

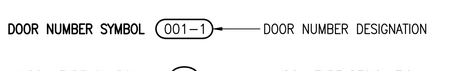

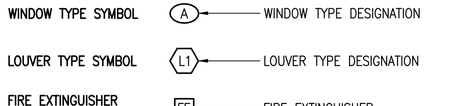

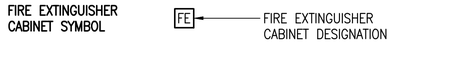

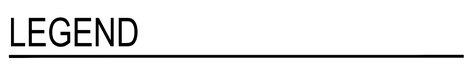

LEGEND

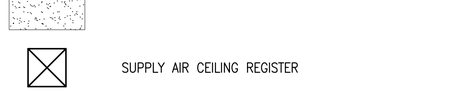

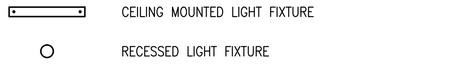

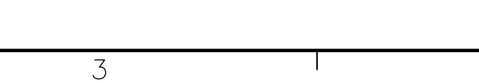

ABBREVIATIONS

AFF	ABOVE FINISH FLOOR
&	AND
CI	CONTINUOUS INSULATION
CFM	CUBIC FEET PER MINUTE
CMU	CONCRETE MASONRY UNIT
CO^2	CARBON DIOXIDE
℄	CENTER LINE
ø	DIAMETER
DN	DOWN
EA	EACH
ELEC	ELECTRICAL
F	FIRE
FE	FIRE EXTINGUISHER
GA	GAUGE
GB	GYPSUM BOARD
H	HIGH
HT	HEIGHT
HR	HOUR
:	IN
L	LONG
LP	LOX PLANT
MAX	MAXIMUM
MECH	MECHANICAL
MIN	MINIMUM
MO	MASONRY OPENING
MTRL	MATERIAL
NIC	NOT IN CONTRACT
NTS	NOT TO SCALE
#	NUMBER
OC	ON CENTER
OPP	OPPOSITE
%	PERCENT
PD	PRESSURE DROP
PEMB	PRE-ENGINEERED METAL BUILDING
PL	PLASTIC LAMINATE
±	PLUS OR MINUS
PT	PAINT
PWD	PLYWOOD
R	RESISTANCE, RISERS
RB	RESILIENT BASE
SAT	SUSPENDED ACOUSTICAL TILE
SF	SONOBUOY FACILITY
SIM	SIMILAR
SQ FT	SQUARE FEET
SS	SOLID SURFACE
STL	STEEL
TYP	TYPICAL
W	WIDE
WB	WINDOW BLINDS
WC	WATER COLUMN
UNO	UNLESS NOTED OTHERWISE

SYM	DESCRIPTION	DATE	APPR

NAVFAC

4899 REGISTERED ARCHITECT
WALLACE S. FRASER
STATE OF WASHINGTON
SEAL

FRASER + FOGLE architects
701 N 36TH STREET, SUITE 330
SEATTLE, WA 98103
A/E INFO

APPROVED
FOR COMMANDER NAVFAC 3/12/15

ACTIVITY
NAS WHIDBEY ISLAND

SATISFACTORY TO DATE
DES RH | DRW RH | CHK WF
<<PM/DM>> JOSEPH KISIDAY
BRANCH MANAGER
CHIEF ENG/ARCH
<<XXX>>

DEPARTMENT OF THE NAVY
NAVAL FACILITIES ENGINEERING COMMAND
NAVAL AIR STATION WHIDBEY ISLAND
NAVAL FACILITIES ENGINEERING COMMAND ~ NORTHWEST
AULT FIELD - OAK HARBOR, WA
NAVAL AIR STATION WHIDBEY ISLAND OAK HARBOR, WA
FY-15 MCON PROJECT P-259 P-8A AIRCRAFT APRON EXPANSION - PART A
GENERAL NOTES, INDEX, SYMBOLS, LEGEND & ABBREVIATIONS

SCALE: AS NOTED
EPROJECT NO.:
CONSTR. CONTR. NO.
N44255-15-C-6003
NAVFAC DRAWING NO.
16030426
SHEET 172 OF 302

A-001

DRAWFORM REVISION: 10 MARCH 2009

LOX PLANT - FLOOR PLAN
SCALE: 1/8"=1'-0"

PLAN NORTH

LOX PLANT - ROOF PLAN
SCALE: 1/8"=1'-0"

PLAN NORTH

FIRE EXTINGUISHERS

ROOM	TYPE	CAPACITY
OFFICE / HALL	3A:40-B:C	5 POUNDS
MAINTENANCE	3A:40-B:C	5 POUNDS
NITROGEN	3A:40-B:C	5 POUNDS
OXYGEN	CO^2 10-B:C	15 POUNDS
STORAGE TANK AREA	2A	2.5 GALLONS

GENERAL NOTES

1. REFER TO EXTERIOR ELEVATIONS FOR VERTICAL LOCATIONS OF LOUVERS AND LOUVER SCHEDULE FOR SIZES.

KEY NOTES

1. EDGE OF ROOF OVERHANG ABOVE
2. STANDING SEAM METAL ROOFING. SEE – A3/A-211
3. 6" METAL GUTTER
4. BUILDING FOOTPRINT BELOW
5. EXISTING 10'H METAL FRAME & CORRUGATED METAL COVERED CANOPY TO BE RELOCATED – SEE CIVIL SHEET CS111
6. EDGE OF CONCRETE FOUNDATION
7. STEEL COLUMN, TYPICAL
8. EDGE OF ROOF ABOVE
9. 4"ø METAL DOWNSPOUT
10. METAL ROOFING – SEE STRUCTURAL SHEET S-111

LOX PLANT - CART PLAN
SCALE: 1/8"=1'-0"

PLAN NORTH

PLAN NORTH

KEY PLAN
SCALE: NTS

LP = GENERAL VICINITY OF LOX PLANT

1/8" = 1'-0"
0 4 8 16 24

SYM | DESCRIPTION | DATE | APPR

NAVFAC

4899 REGISTERED ARCHITECT
WALLACE S. FRASER
STATE OF WASHINGTON
SEAL

FRASER + FOGLE architects
701 N 36TH STREET, SUITE 330
SEATTLE, WA 98103
A/E INFO

APPROVED
FOR COMMANDER NAVFAC 3/2/15

ACTIVITY
NAS WHIDBEY ISLAND

SATISFACTORY TO DATE

DES RH | DRW RH | CHK WF
<<PM/DM>> JOSEPH KISIDAY
BRANCH MANAGER
CHIEF ENG/ARCH
<<XX>>

DEPARTMENT OF THE NAVY NAVAL FACILITIES ENGINEERING COMMAND
NAVAL FACILITIES ENGINEERING COMMAND ~ NORTHWEST
NAVAL AIR STATION WHIDBEY ISLAND AULT FIELD – OAK HARBOR, WA
NAVAL AIR STATION WHIDBEY ISLAND OAK HARBOR, WA
FY-15 MCON PROJECT P-259 P-8A AIRCRAFT APRON EXPANSION - PART A
LOX PLANT – FLOOR & ROOF PLANS

SCALE: AS NOTED
EPROJECT NO.:
CONSTR. CONTR. NO. N44255-15-C-6003
NAVFAC DRAWING NO. 16030427
SHEET 173 OF 302

A-111

DRAWFORM REVISION: 10 MARCH 2009

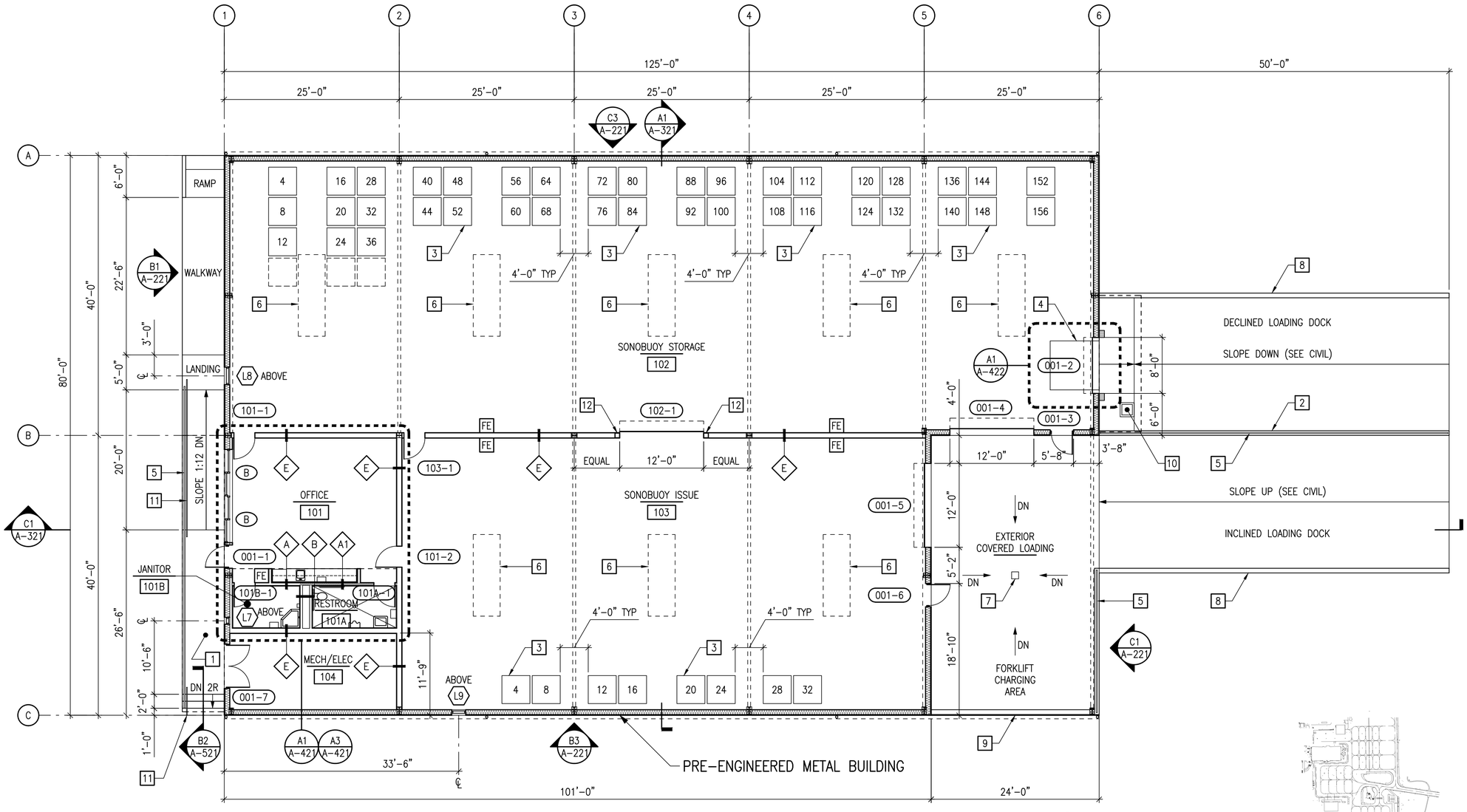

PLAN NORTH

SONOBUOY ISSUE/STORAGE FACILITY - FLOOR PLAN

SCALE: 1/8"=1'-0"

FIRE EXTINGUISHERS		
ROOM	TYPE	CAPACITY
OFFICE	3A:40-B:C	5 POUNDS
STORAGE	3A:40-B:C	5 POUNDS
ISSUE	3A:40-B:C	5 POUNDS

KEY NOTES

1. RAISED CONCRETE LANDING
2. CONCRETE RETAINING WALL
3. PALLETS SHOWN FOR REFERENCE (NIC)
4. 7'-0"W X 8'-0"L DOCK LEVELER
5. 3'-6"H METAL GUARDRAIL
6. 4'-0"W X 12'-0"L SKYLIGHT
7. AREA DRAIN
8. CONCRETE CURB
9. PROVIDE METAL SIDING & GIRTS BETWEEN GRID C5 & C6
10. CATCH BASIN - SEE CIVIL SHEET CG121
11. 3'-0"H METAL HANDRAIL
12. PEMB MANUFACTURER PROVIDED STEEL SUPPORT FRAME FOR COILING DOOR. SEE - D1 A-521 & C1 A-521

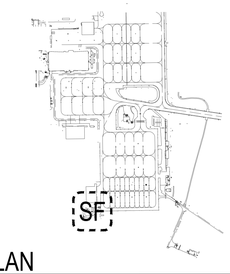

PLAN NORTH

KEY PLAN

SCALE: NTS

SF = GENERAL VICINITY OF SONOBUOY ISSUE/STORAGE FACILITY

1/8" = 1'-0"

0 4 8 16 24

APPR	DATE	DESCRIPTION	SYM

NAVFAC

4899 REGISTERED ARCHITECT
WALLACE S. FRASER
STATE OF WASHINGTON
SEAL

FRASER + FOGLE architects
701 N 36TH STREET, SUITE 330
SEATTLE, WA 98103
A/E INFO

APPROVED
FOR COMMANDER NAVFAC 3/2/15

ACTIVITY
NAS WHIDBEY ISLAND

SATISFACTORY TO DATE

DES RH DRW RH CHK WF
<<PM/DM>> JOSEPH KISIDAY
BRANCH MANAGER
CHIEF ENG/ARCH
<<XXX>>

DEPARTMENT OF THE NAVY
NAVAL FACILITIES ENGINEERING COMMAND
NAVAL AIR STATION WHIDBEY ISLAND

NAVAL FACILITIES ENGINEERING COMMAND - NORTHWEST
AULT FIELD - OAK HARBOR, WA

NAVAL AIR STATION WHIDBEY ISLAND
OAK HARBOR, WA

FY-15 MCON PROJECT P-259 P-8A AIRCRAFT
APRON EXPANSION - PART A

SONOBUOY ISSUE/STORAGE FACILITY - FLOOR PLAN

SCALE: AS NOTED
EPROJECT NO.:
CONSTR. CONTR. NO.
N44255-15-C-6003
NAVFAC DRAWING NO.
16030428
SHEET 174 OF 302

A-121

DRAWFORM REVISION: 10 MARCH 2009

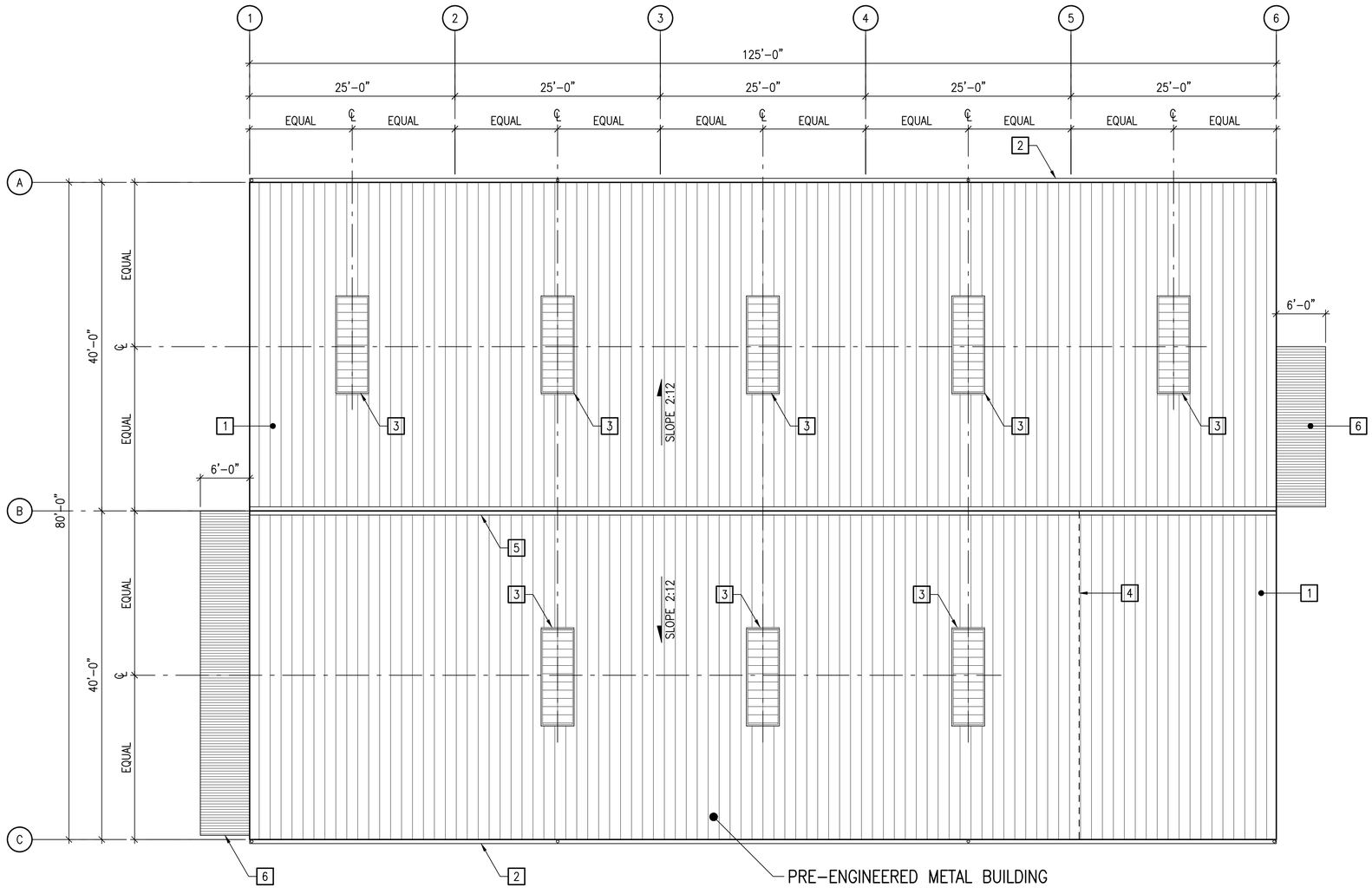

SONOBUOY ISSUE/STORAGE FACILITY - ROOF PLAN

SCALE: 1/8"=1'-0"

PLAN NORTH

KEY NOTES

1. STANDING SEAM METAL ROOFING. SEE – A2 / A-221
2. 6" METAL GUTTER
3. 4'-0"W X 12'-0"L SKYLIGHT
4. BUILDING WALL BELOW
5. RIDGE
6. PRE-ENGINEERED CORRUGATED METAL OVERHANG CANOPY BELOW

1/8" = 1'-0"

0 4 8 16 24

APPR	DATE	DESCRIPTION	SYM

NAVFAC

4899 REGISTERED ARCHITECT
WALLACE S. FRASER
STATE OF WASHINGTON
SEAL

FRASER+FOGLE architects
701 N 36TH STREET, SUITE 330
SEATTLE, WA 98103
A/E INFO

APPROVED
FOR COMMANDER NAVFAC 3/2/15

ACTIVITY
NAS WHIDBEY ISLAND

SATISFACTORY TO DATE

DES RH | DRW RH | CHK WF

<<PM/DM>> JOSEPH KISIDAY

BRANCH MANAGER

CHIEF ENG/ARCH

<<XXX>>

DEPARTMENT OF THE NAVY
NAVAL FACILITIES ENGINEERING COMMAND
NAVAL AIR STATION WHIDBEY ISLAND

NAVAL FACILITIES ENGINEERING COMMAND – NORTHWEST
AULT FIELD – OAK HARBOR, WA

NAVAL AIR STATION WHIDBEY ISLAND
OAK HARBOR, WA

FY-15 MCON PROJECT P-259 P-8A AIRCRAFT APRON EXPANSION - PART A

SONOBUOY ISSUE/STORAGE FACILITY – ROOF PLAN

SCALE: AS NOTED

EPROJECT NO.:

CONSTR. CONTR. NO.
N44255-15-C-6003

NAVFAC DRAWING NO.
16030429

SHEET 175 OF 302

A-122

DRAWFORM REVISION: 10 MARCH 2009

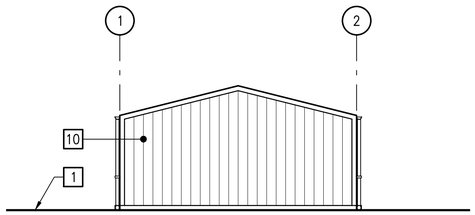

PUMP STATION - SOUTH ELEVATION (C1)
SCALE: 1/8"=1'-0" A-131

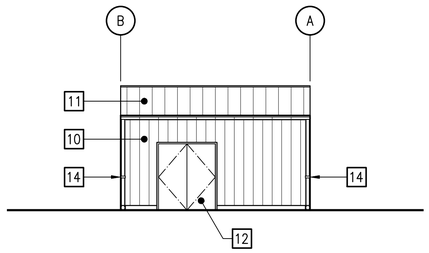

PUMP STATION - EAST ELEVATION (C2)
SCALE: 1/8"=1'-0" A-131

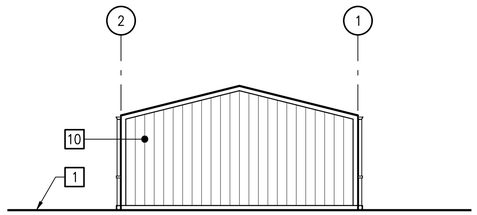

PUMP STATION - NORTH ELEVATION (C3)
SCALE: 1/8"=1'-0" A-131

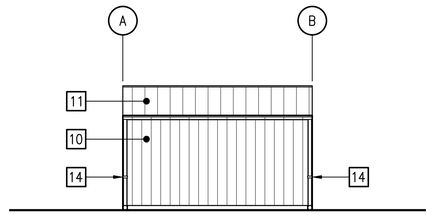

PUMP STATION - WEST ELEVATION (C4)
SCALE: 1/8"=1'-0" A-131

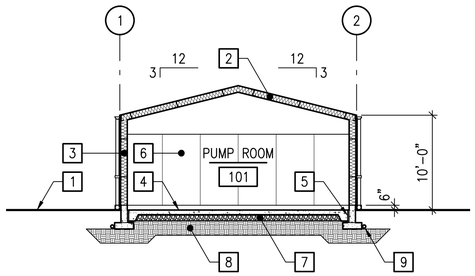

PUMP STATION - CROSS SECTION (B1)
SCALE: 1/8"=1'-0" A-131

ROOM FINISH SCHEDULE - AIRCRAFT RINSE FACILITY PUMP STATION

NO	ROOM NAME	FLOOR		BASE		WALL		CEILING		
		MATERIAL	FINISH	MATERIAL	HT	MATERIAL	FINISH	MATERIAL	FINISH	HT
101	PUMP ROOM	CONCRETE	SEALED	CONCRETE	6"	EXPOSED / PLYWOOD	–	EXPOSED	–	VARIES

FIRE EXTINGUISHERS		
ROOM	TYPE	CAPACITY
PUMP ROOM	2A:10–B:C	5 POUNDS

DOOR SCHEDULE - AIRCRAFT RINSE FACILITY PUMP STATION

NO	DOOR						FRAME		HARDWARE GROUP
	TYPE	OPERATION	WIDTH	HEIGHT	MTRL	FINISH	MTRL	FINISH	
001–1	C	SWING	3'–0" (PAIR)	7'–0"	STEEL	PT1	STEEL	PT1	3

EXTERIOR COLOR SCHEDULE - PUMP STATION

MATERIALS	MANUFACTURER	COLOR
STANDING SEAM METAL ROOFING	VARCO PRUDEN	COOL GRANITE GRAY
RIBBED PANEL METAL SIDING	VARCO PRUDEN	COOL GRANITE GRAY

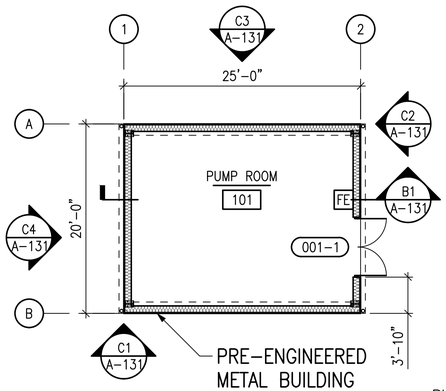

PUMP STATION - FLOOR PLAN
SCALE: 1/8"=1'-0"
PLAN NORTH

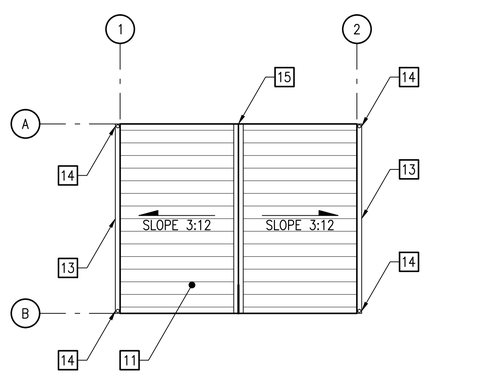

PUMP STATION - ROOF PLAN
SCALE: 1/8"=1'-0"
PLAN NORTH

KEY NOTES

1. APPROXIMATE FINISH GRADE
2. PRE–ENGINEERED METAL BUILDING ROOF SYSTEM:
   - STANDING SEAM METAL ROOFING
   - R–13 + R–19 LINER SYSTEM INSULATION
   - STEEL GIRTS
   - VAPOR RETARDER
3. PRE–ENGINEERED METAL BUILDING WALL SYSTEM:
   - METAL SIDING – SEE ELEVATIONS & SECTIONS FOR TYPES
   - STEEL GIRTS – SPACE 4'–0" OC MAX AT PLYWOOD WAINSCOT
   - R–13.0 + R–6.5 CONTINUOUS INSULATION
   - VAPOR RETARDER
   - PLYWOOD WAINSCOT – 8'–0"H
4. CONCRETE SLAB, 10 MIL VAPOR BARRIER
5. CONTINUOUS R–10 PERIMETER INSULATION. EXTEND TO TOP OF FOOTING
6. PLYWOOD WAINSCOT BEYOND
7. 6" CAPILLARY BREAK
8. 18" STRUCTURAL FILL
9. 4"ø FOOTING DRAIN WITH GRAVEL BACKFILL, TYPICAL
10. RIBBED PANEL METAL SIDING. SEE – A1 / A–221
11. STANDING SEAM METAL ROOFING. SEE – A2 / A–221
12. STEEL DOOR & FRAME
13. 6" METAL GUTTER
14. 4" METAL DOWNSPOUT
15. ROOF RIDGE

SHEET GENERAL NOTES

1. SEE SHEET A–601 FOR DOOR TYPES
2. SEE SHEET A–221 FOR SIDING & ROOFING PROFILES.

COLOR SCHEDULE NOTES

1. MANUFACTURERS NAMES AND COLORS ARE FOR REFERENCE ONLY, AND ARE NOT INTENDED TO LIMIT SELECTIONS FROM OTHER MANUFACTURERS MEETING THE SPECIFICATIONS

1/8" = 1'-0"
0 4 8 16 24

APPR | DATE | DESCRIPTION | SYM

NAVFAC

4899 REGISTERED ARCHITECT
WALLACE S. FRASER
STATE OF WASHINGTON
SEAL

FRASER+FOGLE architects
701 N 36TH STREET, SUITE 330
SEATTLE, WA 98103
A/E INFO

APPROVED
FOR COMMANDER NAVFAC 3/2/15

ACTIVITY
NAS WHIDBEY ISLAND

SATISFACTORY TO DATE
DES RH | DRW RH | CHK WF
<<PM/DM>> JOSEPH KISIDAY
BRANCH MANAGER
CHIEF ENG/ARCH
<<XX>>

DEPARTMENT OF THE NAVY
NAVAL FACILITIES ENGINEERING COMMAND
NAVAL AIR STATION WHIDBEY ISLAND
NAVAL FACILITIES ENGINEERING COMMAND ~ NORTHWEST
AULT FIELD – OAK HARBOR, WA
NAVAL AIR STATION WHIDBEY ISLAND OAK HARBOR, WA
FY-15 MCON PROJECT P-259 P-8A AIRCRAFT APRON EXPANSION - PART A
AIRCRAFT RINSE FACILITY PUMP STATION – PLANS, ELEVATIONS, SECTION & SCHEDULES

SCALE: AS NOTED
EPROJECT NO.:
CONSTR. CONTR NO.: N44255-15-C-6003
NAVFAC DRAWING NO.: 16030430
SHEET 176 OF 302

A-131

DRAWFORM REVISION: 10 MARCH 2009

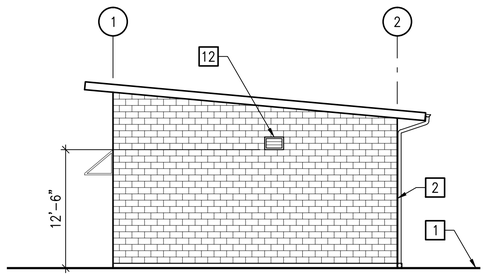

LOX PLANT - SOUTH ELEVATION
SCALE: 1/8"=1'-0"
A-111 C1

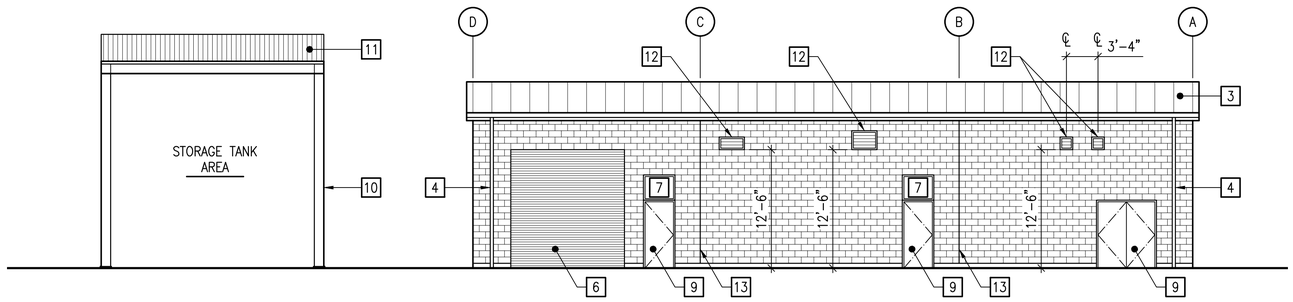

LOX PLANT - EAST ELEVATION
SCALE: 1/8"=1'-0"
A-111 C2

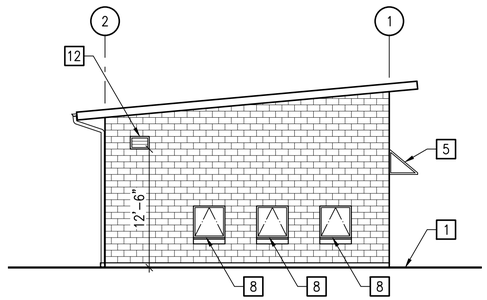

LOX PLANT - NORTH ELEVATION
SCALE: 1/8"=1'-0"
A-111 B1

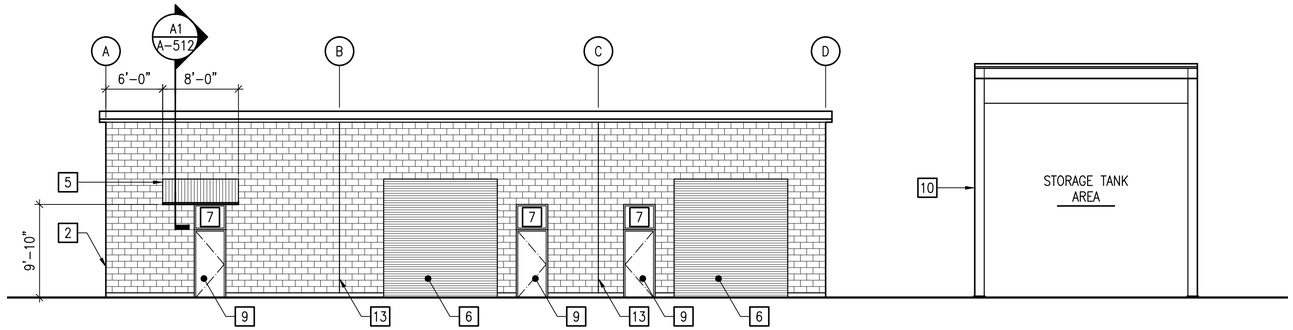

LOX PLANT - WEST ELEVATION
SCALE: 1/8"=1'-0"
A-111 B2

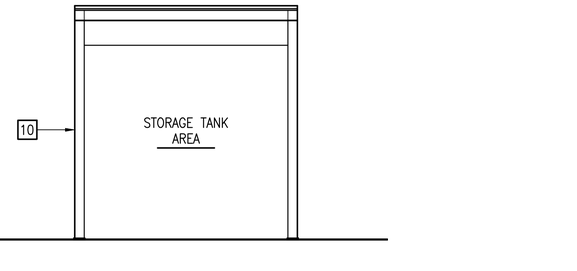

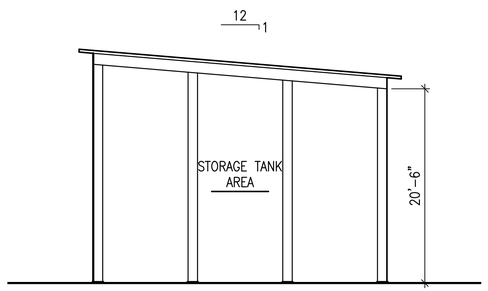

LOX PLANT - SOUTH ELEVATION
SCALE: 1/8"=1'-0"
A-111 A1

KEY NOTES

1. APPROXIMATE FINISH GRADE
2. GROUND FACE CONCRETE MASONRY WALL
3. STANDING SEAM METAL ROOFING. SEE – A3 / A-211
4. 4"ø METAL DOWNSPOUT
5. CORRUGATED METAL OVERHANG CANOPY
6. OVERHEAD COILING DOOR
7. GLAZED TRANSOM PANEL
8. ALUMINUM AWNING WINDOW
9. STEEL DOOR & FRAME
10. STEEL COLUMN
11. METAL ROOFING – SEE STRUCTURAL SHEET S-111
12. STEEL LOUVER. SEE – D2 / A-513 & C2 / A-513
13. CONTROL JOINT – SEE STRUCTURAL SHEET S-521

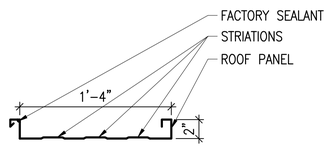

SECTION - ROOFING PROFILE
SCALE: 1-1/2"=1'-0"
A-111 & A-211 A3

1-1/2" = 1'-0"
0 1 2

1/8" = 1'-0"
0 4 8 16 24

APPR | DATE | DESCRIPTION | SYM

NAVFAC

4899 REGISTERED ARCHITECT
Wallace S. Fraser
WALLACE S. FRASER
STATE OF WASHINGTON
SEAL

FRASER + FOGLE architects
701 N 36TH STREET, SUITE 330
SEATTLE, WA 98103
A/E INFO

APPROVED
FOR COMMANDER NAVFAC 3/2/15

ACTIVITY
NAS WHIDBEY ISLAND

SATISFACTORY TO DATE
DES RH | DRW RH | CHK WF
<<PM/DM>> JOSEPH KISIDAY
BRANCH MANAGER
CHIEF ENG/ARCH
<<XXX>>

DEPARTMENT OF THE NAVY
NAVAL FACILITIES ENGINEERING COMMAND
NAVAL AIR STATION WHIDBEY ISLAND

NAVAL FACILITIES ENGINEERING COMMAND ~ NORTHWEST
AULT FIELD - OAK HARBOR, WA

NAVAL AIR STATION WHIDBEY ISLAND OAK HARBOR, WA

FY-15 MCON PROJECT P-259 P-8A AIRCRAFT APRON EXPANSION - PART A

LOX PLANT – EXTERIOR ELEVATIONS

SCALE: AS NOTED
EPROJECT NO.:
CONSTR. CONTR. NO.: N44255-15-C-6003
NAVFAC DRAWING NO.: 16030431
SHEET 177 OF 302

A-211

DRAWFORM REVISION: 10 MARCH 2009

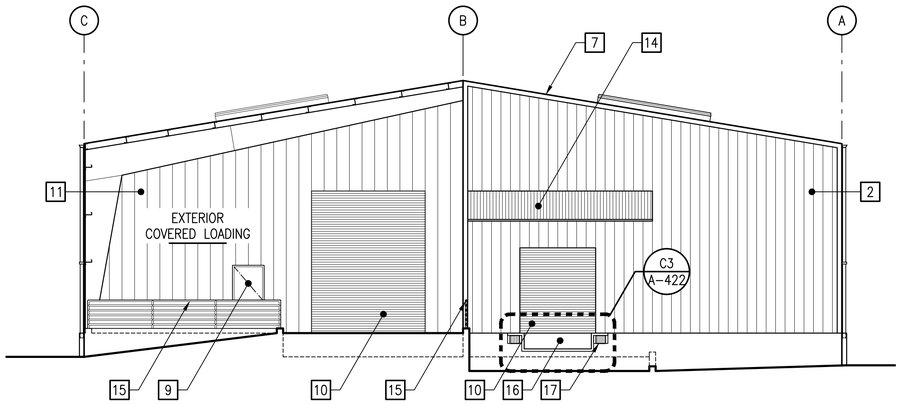

SONOBUOY ISSUE/STORAGE FACILITY - EAST ELEVATION

SCALE: 1/8"=1'-0" A-121 (C1)

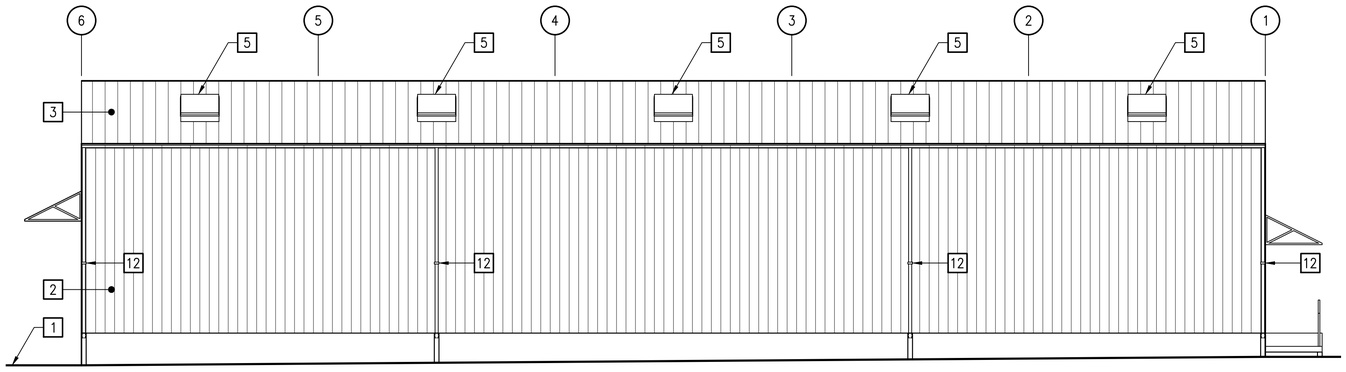

SONOBUOY ISSUE/STORAGE FACILITY - NORTH ELEVATION

SCALE: 1/8"=1'-0" A-121 (C3)

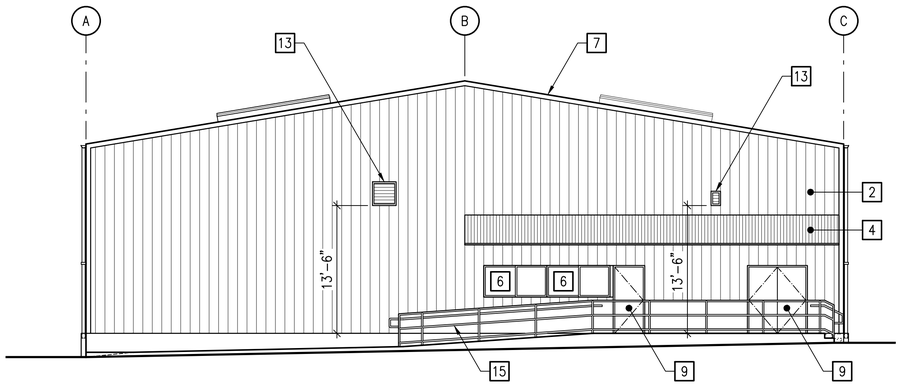

SONOBUOY ISSUE/STORAGE FACILITY - WEST ELEVATION

SCALE: 1/8"=1'-0" A-121 (B1)

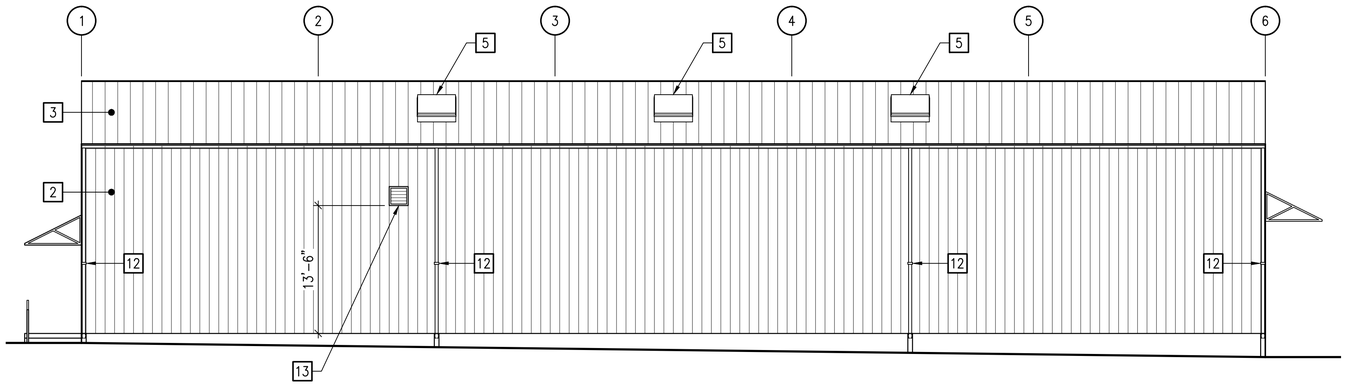

SONOBUOY ISSUE/STORAGE FACILITY - NORTH ELEVATION

SCALE: 1/8"=1'-0" A-121 (B3)

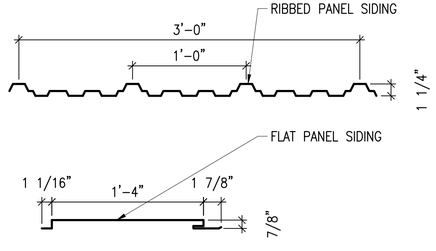

SECTION - SIDING PROFILES

SCALE: 1-1/2"=1'-0" A-131 & A-221 (A1)

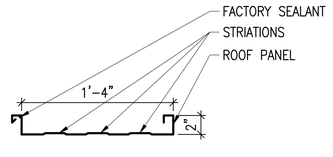

SECTION - ROOFING PROFILE

SCALE: 1-1/2"=1'-0" A-122, A-131 & A-221 (A2)

KEY NOTES

1. APPROXIMATE FINISH GRADE
2. RIBBED PANEL METAL SIDING. SEE – A1/A-221
3. STANDING SEAM METAL ROOFING. SEE – A2/A-221
4. 39'-6"W X 3'-2"H PRE-ENGINEERED CORRUGATED METAL OVERHANG CANOPY
5. 4'-0"W X 12'-0"L SKYLIGHT
6. ALUMINUM SLIDING WINDOW
7. PRE-ENGINEERED METAL BUILDING
8. 3'-0"H 6-RAIL GUARDRAIL ON 6"H CONCRETE CURB. SEE – B3/A-521
9. STEEL DOOR & FRAME
10. OVERHEAD COILING DOOR
11. FLAT PANEL METAL SIDING. PROVIDE AT GRID 5B TO 5C & 5B TO B6. SEE – A1/A-221
12. 4"ø METAL DOWNSPOUT
13. STEEL LOUVER
14. 19'-6"W X 3'-2"H PRE-ENGINEERED CORRUGATED METAL OVERHANG CANOPY
15. 3'-6"H 3-RAIL GUARDRAIL. SEE – B4/A-521
16. DOCK LEVELER
17. LAMINATED DOCK BUMPER AT EACH SIDE OF DOCK LEVELER

1-1/2" = 1'-0"

0 1 2

1/8" = 1'-0"

0 4 8 16 24

APPR	DATE	DESCRIPTION	SYM

NAVFAC

4899 REGISTERED ARCHITECT
WALLACE S. FRASER
STATE OF WASHINGTON
SEAL

FRASER + FOGLE architects
701 N 36TH STREET, SUITE 330
SEATTLE, WA 98103
A/E INFO

APPROVED
FOR COMMANDER NAVFAC 3/2/15

ACTIVITY
NAS WHIDBEY ISLAND

SATISFACTORY TO DATE
DES RH DRW RH CHK WF
<<PM/DM>> JOSEPH KISIDAY
BRANCH MANAGER
CHIEF ENG/ARCH
<<XXX>>

DEPARTMENT OF THE NAVY
NAVAL FACILITIES ENGINEERING COMMAND
NAVAL AIR STATION WHIDBEY ISLAND

NAVAL FACILITIES ENGINEERING COMMAND – NORTHWEST
AULT FIELD – OAK HARBOR, WA

NAVAL AIR STATION WHIDBEY ISLAND
OAK HARBOR, WA

FY-15 MCON PROJECT P-259 P-8A AIRCRAFT
APRON EXPANSION - PART A

SONOBUOY ISSUE/STORAGE FACILITY – EXTERIOR ELEVATIONS

SCALE: AS NOTED
EPROJECT NO.:
CONSTR. CONTR. NO.
N44255-15-C-6003
NAVFAC DRAWING NO.
16030432
SHEET 178 OF 302

A-221

DRAWFORM REVISION: 10 MARCH 2009

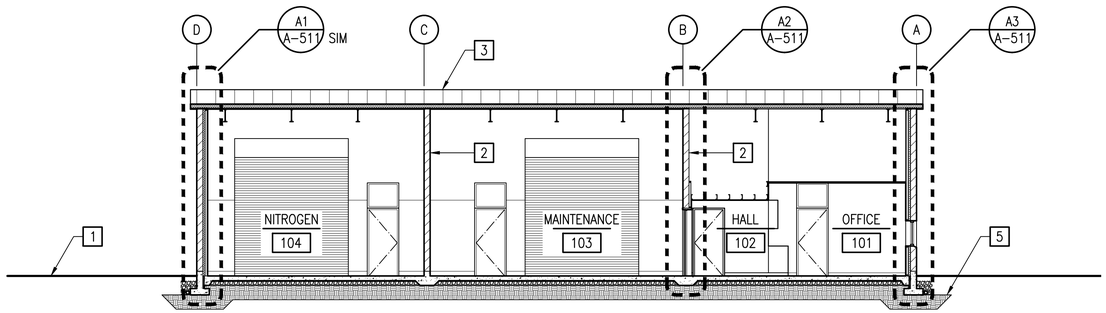

LOX PLANT - LONGITUDINAL SECTION

SCALE: 1/8"=1'–0"

A–111 B1

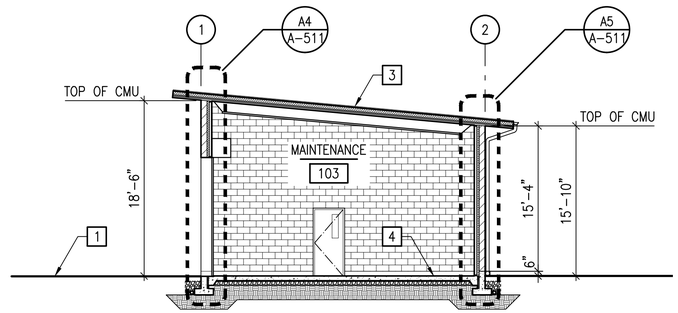

LOX PLANT - CROSS SECTION

SCALE: 1/8"=1'–0"

A–111 B4

KEY NOTES

1. APPROXIMATE FINISH GRADE
2. 8" CONCRETE MASONRY WALL
3. STANDING SEAM METAL ROOFING, R–25 ROOF INSULATION, METAL DECK & STEEL JOISTS
4. CONCRETE SLAB, 10 MIL VAPOR BARRIER, 6" DRAINAGE FILL
5. STRUCTURAL FILL – SEE STRUCTURAL SHEET S–522

1/8" = 1'–0"

0 4 8 16 24

APPR	DATE	DESCRIPTION	SYM

NAVFAC

4899 REGISTERED ARCHITECT
WALLACE S. FRASER
STATE OF WASHINGTON
SEAL

FRASER + FOGLE architects
701 N 36TH STREET, SUITE 330
SEATTLE, WA 98103
A/E INFO

APPROVED
FOR COMMANDER NAVFAC 3/12/15

ACTIVITY
NAS WHIDBEY ISLAND

SATISFACTORY TO DATE

DES: RH	DRW: RH	CHK: WF

<<CPM/DM>> JOSEPH KISIDAY
BRANCH MANAGER
CHIEF ENG/ARCH
<<XXX>>

DEPARTMENT OF THE NAVY
NAVAL FACILITIES ENGINEERING COMMAND
NAVAL AIR STATION WHIDBEY ISLAND

NAVAL FACILITIES ENGINEERING COMMAND ~ NORTHWEST
AULT FIELD ~ OAK HARBOR, WA

NAVAL AIR STATION WHIDBEY ISLAND OAK HARBOR, WA

FY-15 MCON PROJECT P-259 P-8A AIRCRAFT APRON EXPANSION - PART A

LOX PLANT – BUILDING SECTIONS

SCALE: AS NOTED
EPROJECT NO.:
CONSTR. CONTR. NO.: N44255–15–C–6003
NAVFAC DRAWING NO.: 16030433
SHEET 179 OF 302

A-311

DRAWFORM REVISION: 10 MARCH 2009

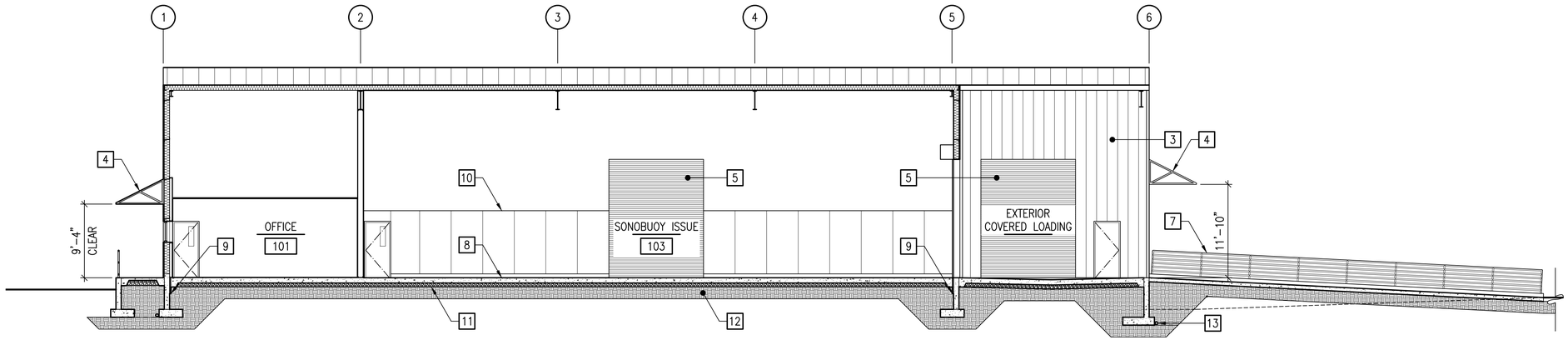

SONOBUOY ISSUE/STORAGE FACILITY - LONGITUDINAL SECTION

SCALE: 1/8"=1'-0"

A-121 C1

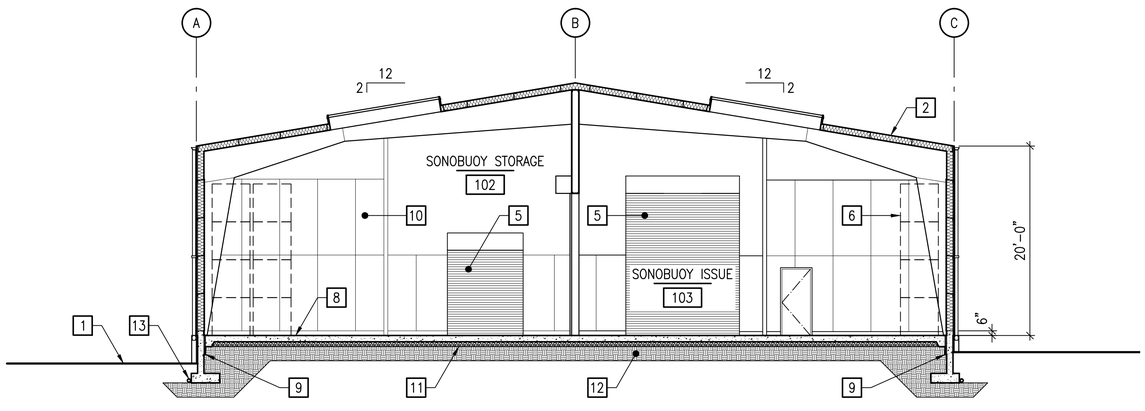

SONOBUOY ISSUE/STORAGE FACILITY - CROSS SECTION

SCALE: 1/8"=1'-0"

A-121 A1

KEY NOTES

1. APPROXIMATE FINISH GRADE
2. PRE-ENGINEERED METAL BUILDING ROOF SYSTEM:
   - STANDING SEAM METAL ROOFING
   - R-19 + R-11 LINER SYSTEM INSULATION
   - STEEL GIRTS
   - VAPOR RETARDER
3. PRE-ENGINEERED METAL BUILDING WALL SYSTEM:
   - METAL SIDING - SEE ELEVATIONS & SECTIONS FOR TYPES
   - STEEL GIRTS - SPACE 4'-0" OC MAX AT PLYWOOD WAINSCOT
   - R-13.0 + R-13.0 CONTINUOUS INSULATION
   - VAPOR RETARDER
   - PLYWOOD WAINSCOT - SEE FINISH SCHEDULE
   - METAL STUD FURRING & WALL FINISH - SEE WALL TYPES & FINISH SCHEDULE
4. PRE-ENGINEERED METAL BUILDING OVERHANG CANOPY
5. OVERHEAD COILING DOOR
6. SONOBUOY PALLETS SHOWN DASHED FOR REFERENCE (NIC)
7. 3'-0"H 6-RAIL GUARDRAIL ON 6"H CONCRETE CURB. SEE - B3 / A-521
8. CONCRETE SLAB, 10 MIL VAPOR BARRIER
9. CONTINUOUS R-10 PERIMETER INSULATION. EXTEND 24" BELOW TOP OF SLAB OR TO TOP OF FOOTING. FOR BASE COVER WHEN EXPOSED IN ROOM, SEE - C5 / A-527
10. PLYWOOD WAINSCOT BEYOND
11. 6" CAPILLARY BREAK
12. 18" STRUCTURAL FILL - SEE STRUCTURAL SHEET S-512
13. 4"ø FOOTING DRAIN WITH GRAVEL BACKFILL, TYPICAL

1/8" = 1'-0"

0 4 8 16 24

APPR | DATE | DESCRIPTION | SYM

NAVFAC

4899 REGISTERED ARCHITECT
Wallace S. Fraser
WALLACE S. FRASER
STATE OF WASHINGTON
SEAL

FRASER + FOGLE architects
701 N 36TH STREET, SUITE 330
SEATTLE, WA 98103
A/E INFO

APPROVED
FOR COMMANDER NAVFAC 3/2/15

ACTIVITY
NAS WHIDBEY ISLAND

SATISFACTORY TO DATE

DES	RH	DRW	RH	CHK	WF

<<PM/DM>> JOSEPH KISIDAY
BRANCH MANAGER
CHIEF ENG./ARCH
<<XXX>>

DEPARTMENT OF THE NAVY
NAVAL FACILITIES ENGINEERING COMMAND
NAVAL AIR STATION WHIDBEY ISLAND

NAVAL FACILITIES ENGINEERING COMMAND - NORTHWEST
AULT FIELD - OAK HARBOR, WA

NAVAL AIR STATION WHIDBEY ISLAND
OAK HARBOR, WA

FY-15 MCON PROJECT P-259 P-8A AIRCRAFT
APRON EXPANSION - PART A

SONOBUOY ISSUE/STORAGE FACILITY - BUILDING SECTIONS

SCALE: AS NOTED
EPROJECT NO.:
CONSTR. CONTR. NO.
N44255-15-C-6003
NAVFAC DRAWING NO.
16030434
SHEET 180 OF 302

A-321

DRAWFORM REVISION: 10 MARCH 2009

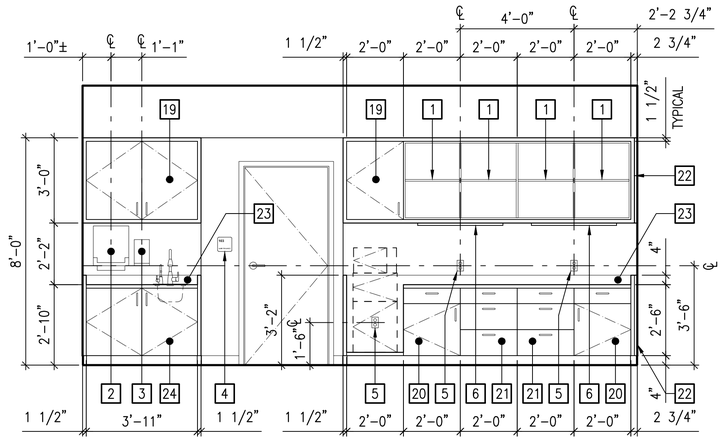

OFFICE ELEVATION

SCALE: 3/8"=1'-0" A-411 C1

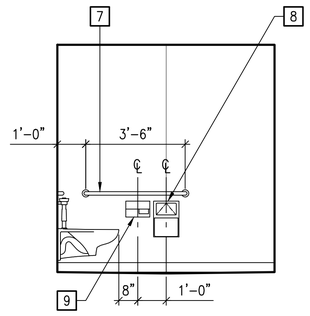

RESTROOM ELEVATION

SCALE: 3/8"=1'-0" A-411 C3

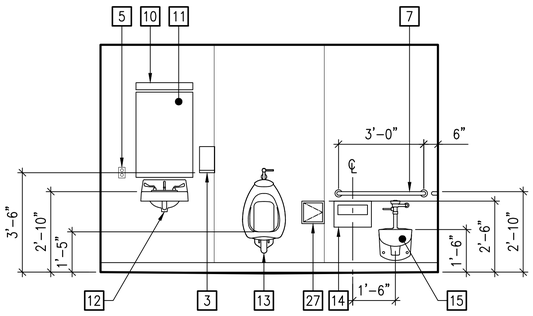

RESTROOM ELEVATION

SCALE: 3/8"=1'-0" A-411 C4

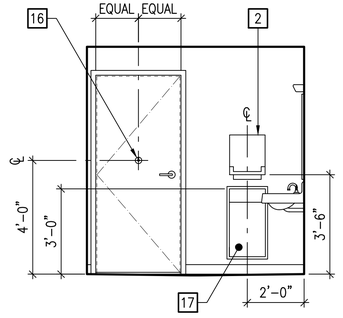

RESTROOM ELEVATION

SCALE: 3/8"=1'-0" A-411 C5

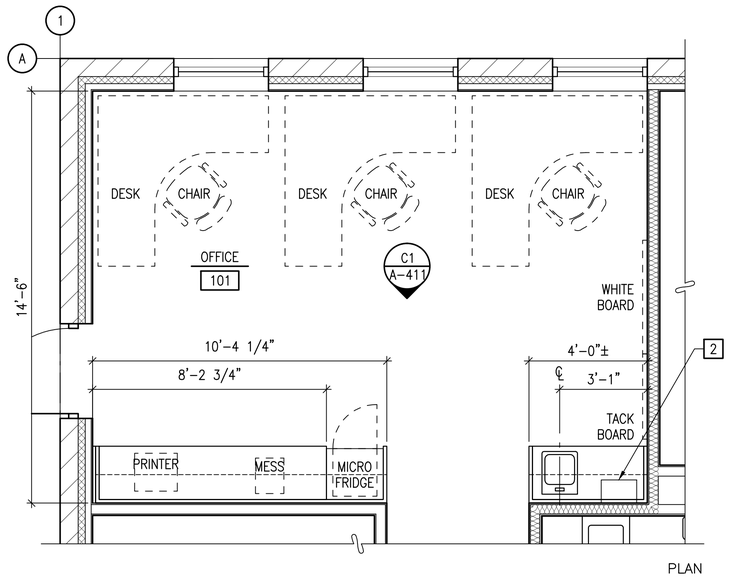

LOX PLANT - ENLARGED FLOOR PLAN PLAN

SCALE: 3/8"=1'-0" A-111 A1

PLAN NORTH

NOTE: DASHED FURNISHINGS ARE FOR REFERENCE ONLY. REFER TO COMPREHENSIVE INTERIOR DESIGN PACKAGE.

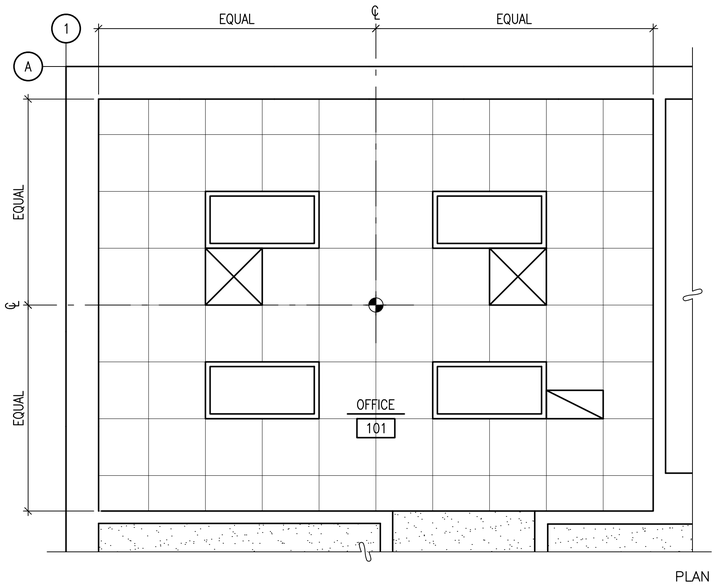

LOX PLANT - ENLARGED REFLECTED CEILING PLAN

SCALE: 3/8"=1'-0" A-111 A2

PLAN NORTH

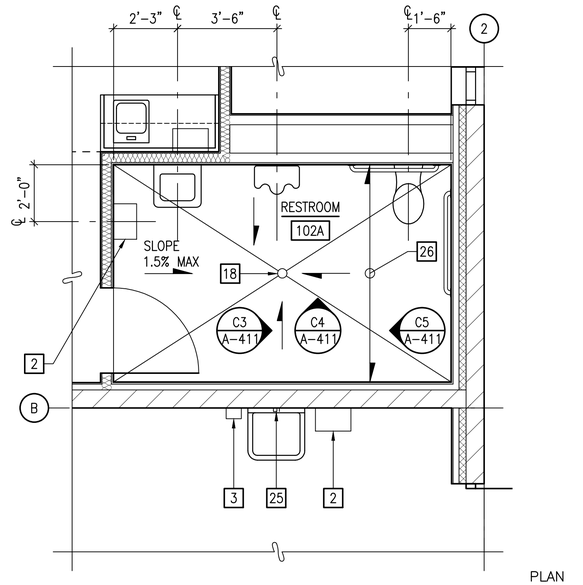

LOX PLANT - ENLARGED FLOOR PLAN

SCALE: 3/8"=1'-0" A-111 B4

PLAN NORTH

KEY NOTES

1. 12"D PLASTIC LAMINATE WALL CABINET WITH ADJUSTABLE OPEN SHELF
2. PAPER TOWEL DISPENSER
3. SOAP DISPENSER
4. ROOM SIGNAGE
5. ELECTRICAL OUTLET
6. 36"L SURFACE MOUNTED UNDERCABINET LIGHT FIXTURE
7. WALL MOUNTED GRAB BAR
8. SANITARY NAPKIN DISPOSAL
9. TOILET PAPER DISPENSER
10. WALL MOUNTED LIGHT FIXTURE
11. 24"W X 36"H MIRROR MOUNTED 3'-4" AFF TO BOTTOM EDGE OF REFLECTING SURFACE
12. WALL MOUNTED SINK
13. WALL MOUNTED URINAL
14. TOILET SEAT COVER DISPENSER
15. WALL MOUNTED TOILET
16. SURFACE MOUNTED COAT HOOK
17. SEMI-RECESSED TRASH RECEPTACLE
18. FLOOR DRAIN AT 1/2" BELOW FINISH FLOOR ELEVATION
19. 12"D PLASTIC LAMINATE WALL CABINET WITH DOOR & ADJUSTABLE SHELF
20. 24"D PLASTIC LAMINATE BASE CABINET WITH DOOR, DRAWER & ADJUSTABLE SHELF
21. 24"D PLASTIC LAMINATE BASE CABINET WITH 3 DRAWERS
22. 1-1/4" PLASTIC LAMINATE FILLER
23. 25"D PLASTIC LAMINATE COUNTER WITH 4"H WALL & END SPLASH
24. 24"D PLASTIC LAMINATE SINK BASE
25. WALL MOUNTED MOP HOLDER
26. 6" 18 GAUGE STEEL CEILING JOISTS AT 12" OC
27. 8" X 8" TRAP PRIMER ACCESS PANEL

3/8" = 1'-0"

0 1 2 4 8

APPR	DATE	DESCRIPTION	SYM

NAVFAC

4899 REGISTERED ARCHITECT
WALLACE S. FRASER
STATE OF WASHINGTON
SEAL

FRASER + FOGLE architects
701 N 36TH STREET, SUITE 330
SEATTLE, WA 98103
A/E INFO

APPROVED
FOR COMMANDER NAVFAC 3/2/15
ACTIVITY
NAS WHIDBEY ISLAND
SATISFACTORY TO DATE
DES RH DRW RH CHK WF
<<PM/DM>> JOSEPH KISIDAY
BRANCH MANAGER
CHIEF ENG./ARCH
<<XXX>>

DEPARTMENT OF THE NAVY
NAVAL FACILITIES ENGINEERING COMMAND NORTHWEST
NAVAL AIR STATION WHIDBEY ISLAND

NAVAL FACILITIES ENGINEERING COMMAND ~ NORTHWEST
AULT FIELD - OAK HARBOR, WA
NAVAL AIR STATION WHIDBEY ISLAND
OAK HARBOR, WA
FY-15 MCON PROJECT P-259 P-8A AIRCRAFT APRON EXPANSION - PART A
LOX PLANT -
ENLARGED PLANS & INTERIOR ELEVATIONS

SCALE: AS NOTED
EPROJECT NO.:
CONSTR. CONTR. NO.
N44255-15-C-6003
NAVFAC DRAWING NO.
16030435
SHEET 181 OF 302

A-411

DRAWFORM REVISION: 10 MARCH 2009

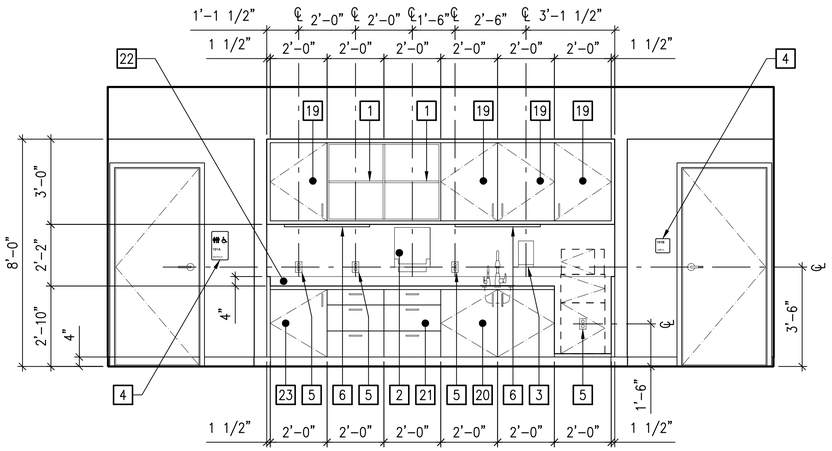

OFFICE ELEVATION
SCALE: 3/8"=1'-0" A-421 C1

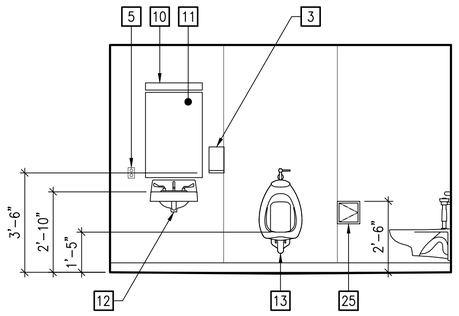

RESTROOM ELEVATION
SCALE: 3/8"=1'-0" A-421 C3

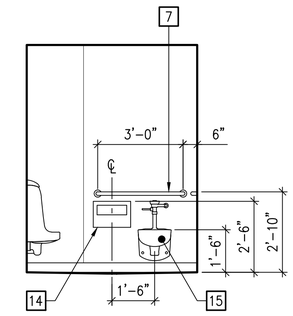

RESTROOM ELEVATION
SCALE: 3/8"=1'-0" A-421 C4

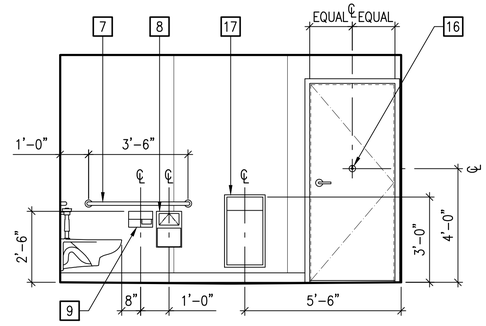

RESTROOM ELEVATION
SCALE: 3/8"=1'-0" A-421 C5

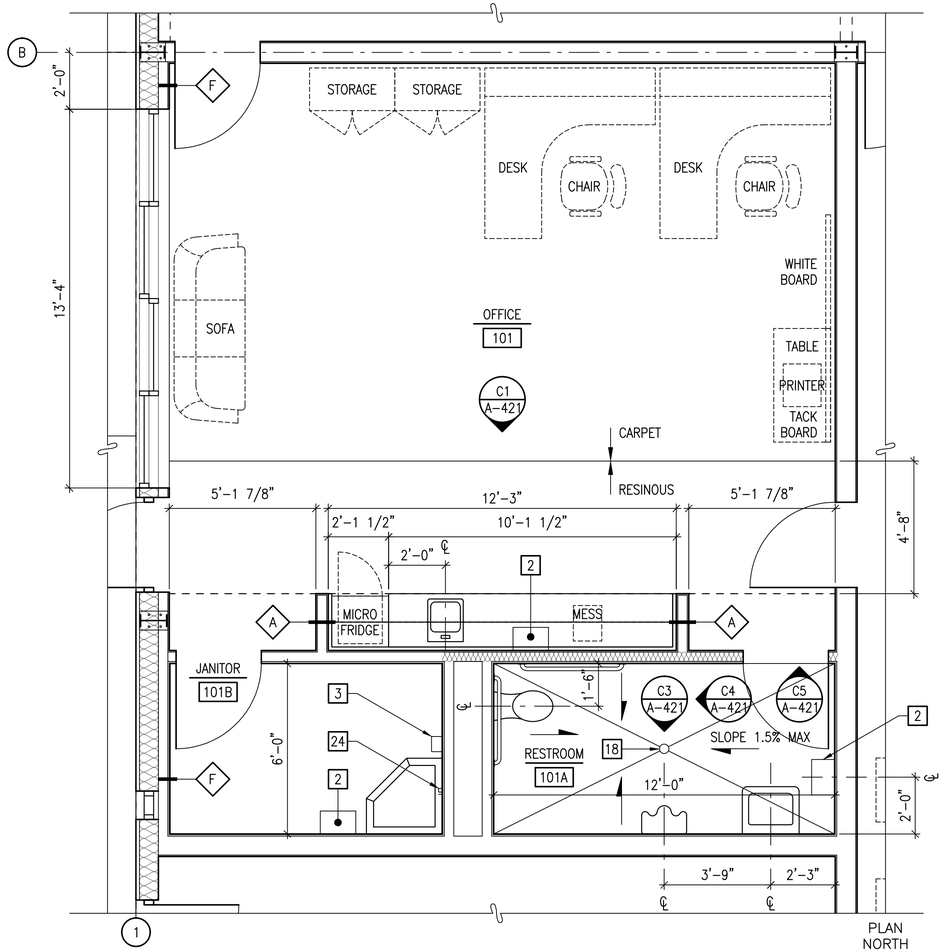

SONOBUOY FACILITY - ENLARGED FLOOR PLAN
SCALE: 3/8"=1'-0" A-121 A1

PLAN NORTH

NOTE: DASHED FURNISHINGS ARE FOR REFERENCE ONLY. REFER TO COMPREHENSIVE INTERIOR DESIGN PACKAGE.

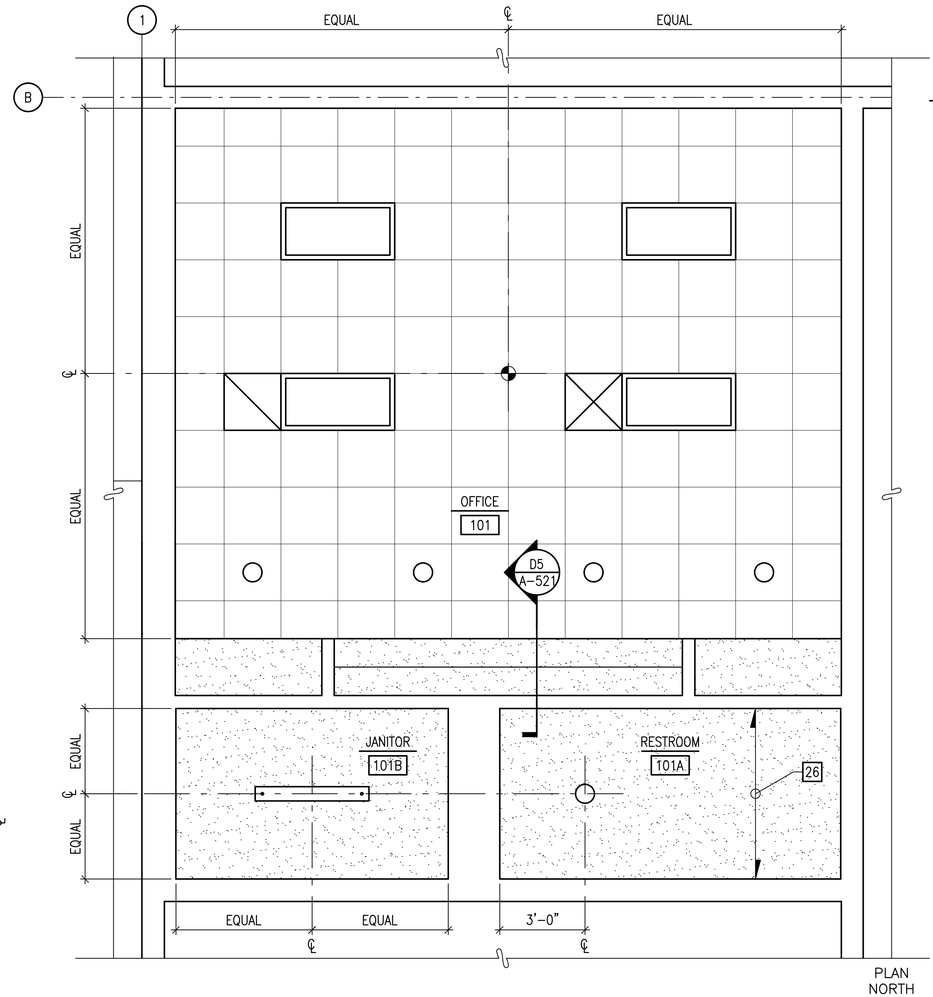

SONOBUOY FACILITY - ENLARGED REFLECTED CEILING PLAN
SCALE: 3/8"=1'-0" A-121 A3

PLAN NORTH

KEY NOTES

1. 12"D PLASTIC LAMINATE WALL CABINET WITH ADJUSTABLE OPEN SHELF
2. PAPER TOWEL DISPENSER
3. SOAP DISPENSER
4. ROOM SIGNAGE
5. ELECTRICAL OUTLET
6. 36"L SURFACE MOUNTED UNDERCABINET LIGHT FIXTURE
7. WALL MOUNTED GRAB BAR
8. SANITARY NAPKIN DISPOSAL
9. TOILET PAPER DISPENSER
10. WALL MOUNTED LIGHT FIXTURE
11. 24"W X 36"H MIRROR MOUNTED 3'-4" AFF TO BOTTOM EDGE OF REFLECTING SURFACE
12. WALL MOUNTED SINK
13. WALL MOUNTED URINAL
14. TOILET SEAT COVER DISPENSER
15. WALL MOUNTED TOILET
16. SURFACE MOUNTED COAT HOOK
17. SEMI-RECESSED TRASH RECEPTACLE
18. FLOOR DRAIN AT 1/2" BELOW FINISH FLOOR ELEVATION
19. 12"D PLASTIC LAMINATE WALL CABINET WITH DOOR & ADJUSTABLE SHELF
20. 24"D PLASTIC LAMINATE SINK BASE
21. 24"D PLASTIC LAMINATE BASE CABINET WITH 3 DRAWERS
22. 25"D PLASTIC LAMINATE COUNTER WITH 4"H WALL & END SPLASH
23. 24"D PLASTIC LAMINATE BASE CABINET
24. WALL MOUNTED MOP HOLDER
25. 8" X 8" TRAP PRIMER ACCESS PANEL
26. 6" 18 GAUGE STEEL JOISTS AT 12" OC

3/8" = 1'-0"
0 1 2 4 8

APPR | DATE | DESCRIPTION | SYM

NAVFAC

4899 REGISTERED ARCHITECT
Wallace S. Fraser
WALLACE S. FRASER
STATE OF WASHINGTON
SEAL

FRASER + FOGLE architects
701 N 36TH STREET, SUITE 330
SEATTLE, WA 98103
A/E INFO

APPROVED
FOR COMMANDER NAVFAC 3/2/15
ACTIVITY
NAS WHIDBEY ISLAND
SATISFACTORY TO DATE
DES RH | DRW RH | CHK WF
<<PM/DM>> JOSEPH KISIDAY
BRANCH MANAGER
CHIEF ENG/ARCH
<<XXX>>

DEPARTMENT OF THE NAVY
NAVAL FACILITIES ENGINEERING COMMAND
NAVAL AIR STATION WHIDBEY ISLAND

NAVAL FACILITIES ENGINEERING COMMAND – NORTHWEST
AULT FIELD – OAK HARBOR, WA

NAVAL AIR STATION WHIDBEY ISLAND
OAK HARBOR, WA

FY-15 MCON PROJECT P-259 P-8A AIRCRAFT APRON EXPANSION - PART A

SONOBUOY ISSUE/STORAGE FACILITY – ENLARGED PLANS & INTERIOR ELEVATIONS

SCALE: AS NOTED
EPROJECT NO.:
CONSTR. CONTR. NO.
N44255-15-C-6003
NAVFAC DRAWING NO.
16030436
SHEET 182 OF 302

A-421

DRAWFORM REVISION: 10 MARCH 2009

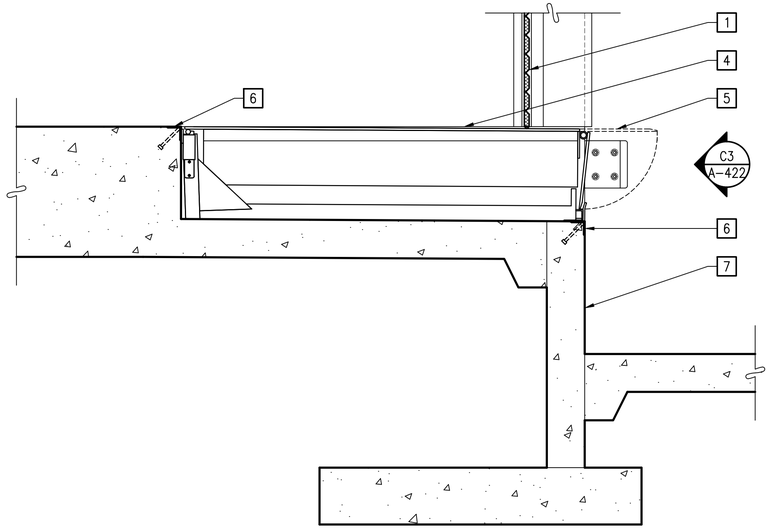

SONOBUOY ISSUE/STORAGE FACILITY - ENLARGED SECTION

SCALE: 3/4"=1'-0"

A-422 C1

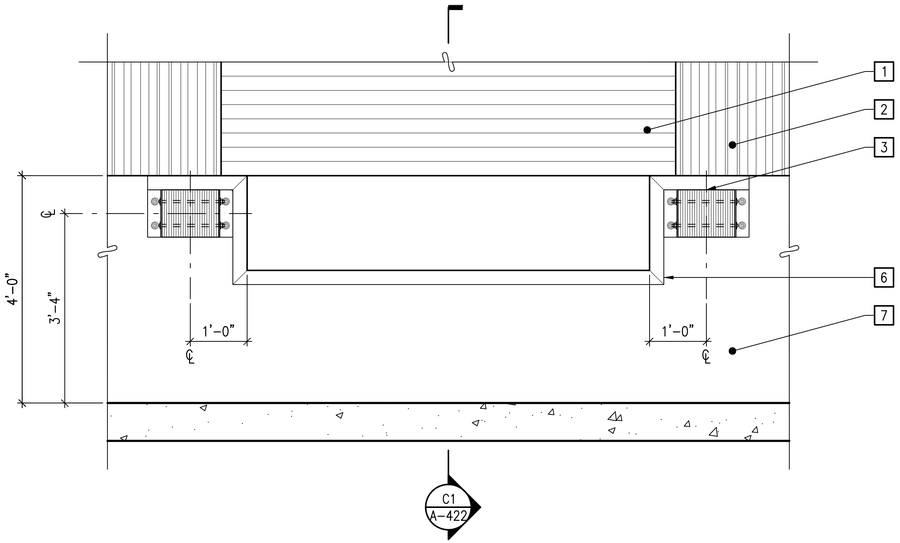

SONOBUOY ISSUE/STORAGE FACILITY - ENLARGED ELEVATION

SCALE: 3/4"=1'-0"

A-121 & A-422 C3

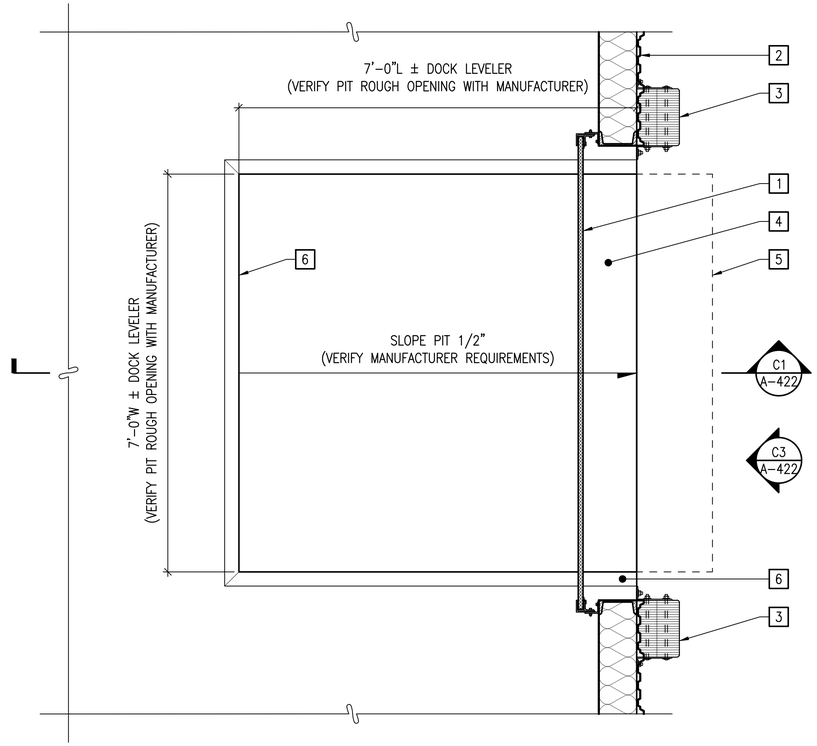

SONOBUOY ISSUE/STORAGE FACILITY - ENLARGED PLAN

SCALE: 3/4"=1'-0"

A-121 A1

PLAN NORTH

KEY NOTES

1. INSULATED OVERHEAD COILING DOOR
2. RIBBED PANEL SIDING
3. 18"W X 10"H X 9"D LAMINATED DOCK BUMPER
4. 7'-0"W X 8'-0"L MECHANICAL DOCK LEVELER (NOTE: LENGTH INCLUDES LIP WELDMENT NOMINAL SIZE)
5. ADJUSTABLE LIP WELDMENT
6. ∠3" X 3" X 1/4" CURB ANGLE WITH 1/2"ø CONCRETE ANCHORS AT 12" OC WITH 6" EMBEDMENT DEPTH
7. CONCRETE FOUNDATION

3/4" = 1'-0"

0 1 2 4

APPR | DATE | DESCRIPTION | NO'S

NAVFAC

4899 REGISTERED ARCHITECT
WALLACE S. FRASER
STATE OF WASHINGTON
SEAL

FRASER + FOGLE architects
701 N 36TH STREET, SUITE 330
SEATTLE, WA 98103
A/E INFO

APPROVED
FOR COMMANDER NAVFAC 3/2/15

ACTIVITY
NAS WHIDBEY ISLAND

SATISFACTORY TO DATE
DES RH | DRW RH | CHK WF
<<PM/DM>> JOSEPH KISIDAY
BRANCH MANAGER
CHIEF ENG/ARCH
<<XXX>>

DEPARTMENT OF THE NAVY
NAVAL FACILITIES ENGINEERING COMMAND
NAVAL AIR STATION WHIDBEY ISLAND

NAVAL FACILITIES ENGINEERING COMMAND ~ NORTHWEST
AULT FIELD ~ OAK HARBOR, WA

NAVAL AIR STATION WHIDBEY ISLAND OAK HARBOR, WA

FY-15 MCON PROJECT P-259 P-8A AIRCRAFT APRON EXPANSION - PART A

SONOBUOY ISSUE/STORAGE FACILITY – ENLARGED PLAN, ELEVATION & SECTION

SCALE: AS NOTED
EPROJECT NO.:
CONSTR. CONTR. NO.
N44255-15-C-6003
NAVFAC DRAWING NO.
16030437
SHEET 183 OF 302

A-422

DRAWFORM REVISION: 10 MARCH 2009

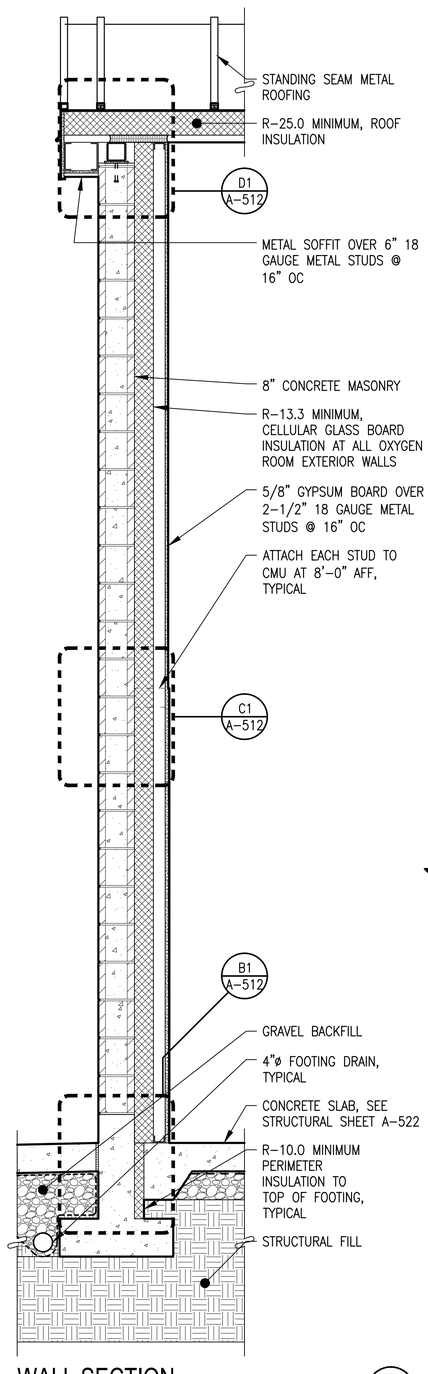

WALL SECTION

SCALE: 3/4"=1'-0"

A-111 & A-311 (A1)

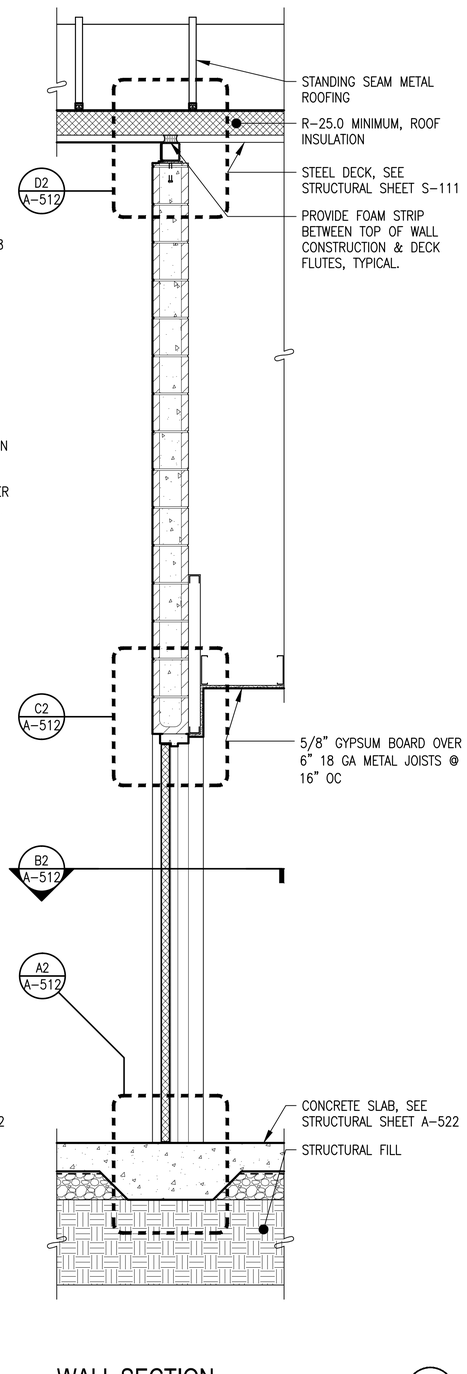

WALL SECTION

SCALE: 3/4"=1'-0"

A-311 (A2)

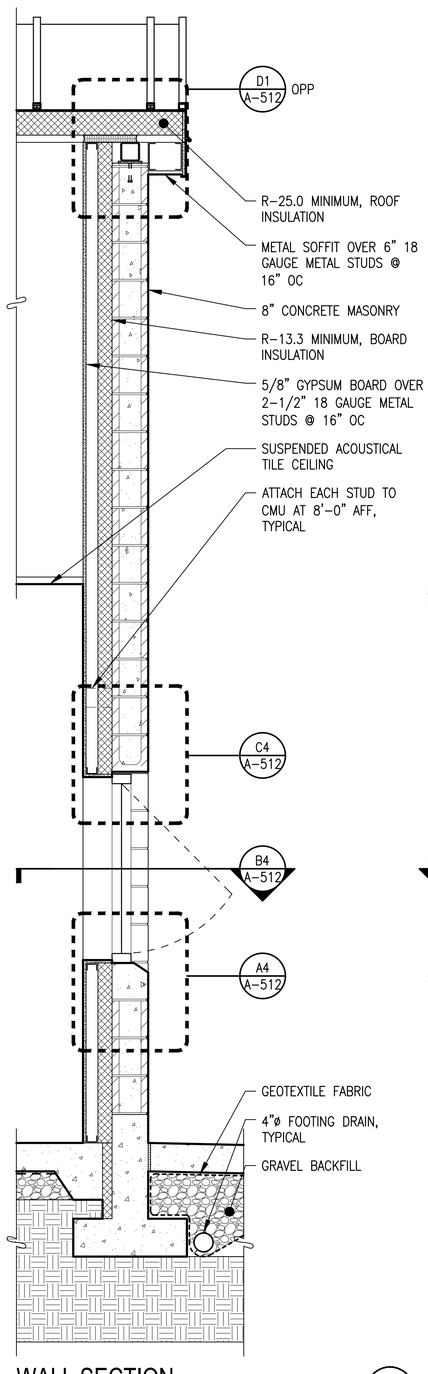

WALL SECTION

SCALE: 3/4"=1'-0"

A-311 (A3)

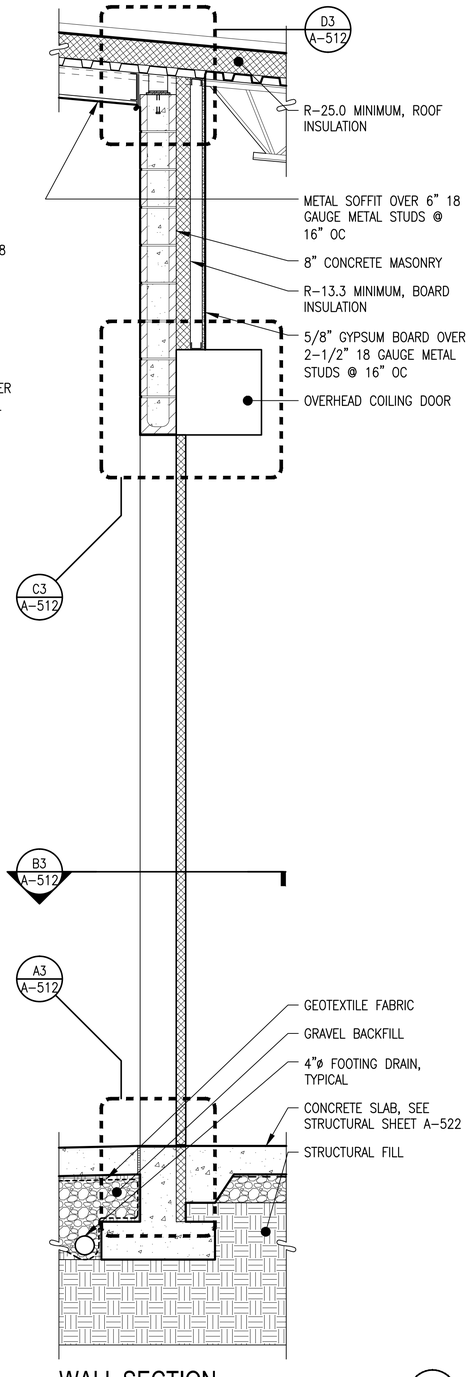

WALL SECTION

SCALE: 3/4"=1'-0"

A-311 (A4)

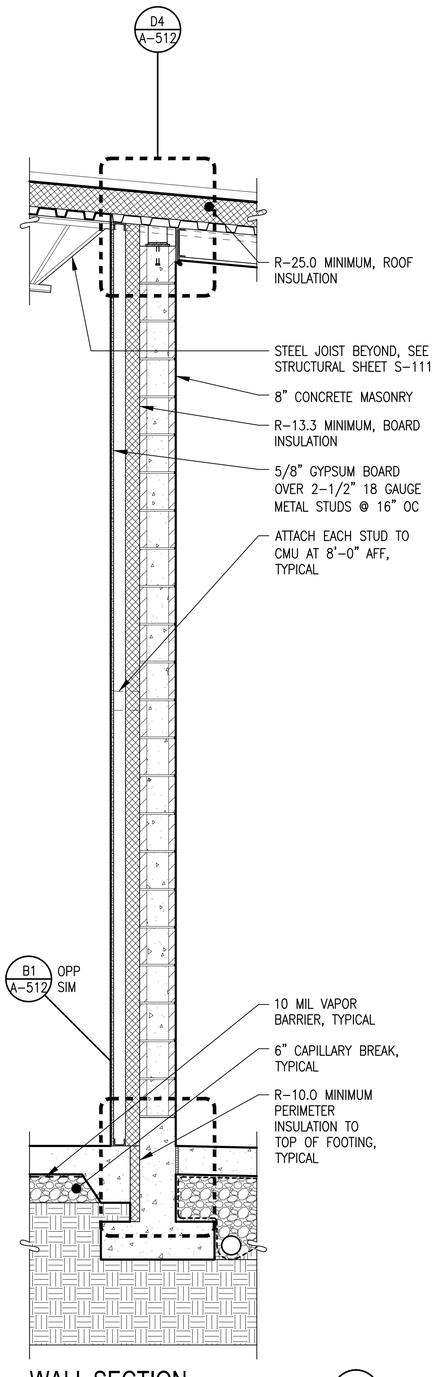

WALL SECTION

SCALE: 3/4"=1'-0"

A-311 (A5)

3/4" = 1'-0"

0 1 2 4

APPR	DATE	DESCRIPTION	STM

NAVFAC

4899 REGISTERED ARCHITECT
WALLACE S. FRASER
STATE OF WASHINGTON
SEAL

FRASER + FOGLE architects
701 N 36TH STREET, SUITE 330
SEATTLE, WA 98103
A/E INFO

APPROVED
FOR COMMANDER NAVFAC 3/2/15

ACTIVITY
NAS WHIDBEY ISLAND

SATISFACTORY TO DATE

DES RH DRW RH CHK WF

<<PM/DM>> JOSEPH KISIDAY

BRANCH MANAGER

CHIEF ENG/ARCH

<<XXX>>

DEPARTMENT OF THE NAVY
NAVAL FACILITIES ENGINEERING COMMAND
NAVAL AIR STATION WHIDBEY ISLAND

NAVAL FACILITIES ENGINEERING COMMAND ~ NORTHWEST
AULT FIELD - OAK HARBOR, WA

NAVAL AIR STATION WHIDBEY ISLAND
OAK HARBOR, WA

FY-15 MCON PROJECT P-259 P-8A AIRCRAFT APRON EXPANSION - PART A

LOX PLANT – WALL SECTIONS

SCALE: AS NOTED

EPROJECT NO.:

CONSTR. CONTR. NO.
N44255-15-C-6003

NAVFAC DRAWING NO.
16030438

SHEET 184 OF 302

A-511

DRAWFORM REVISION: 10 MARCH 2009

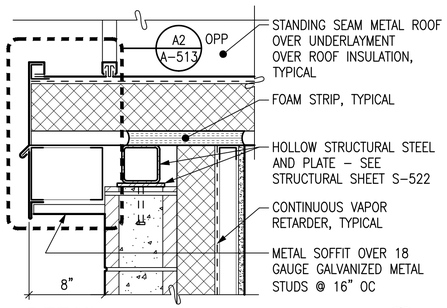

DETAIL
SCALE: 1-1/2" = 1'-0" A-511 D1

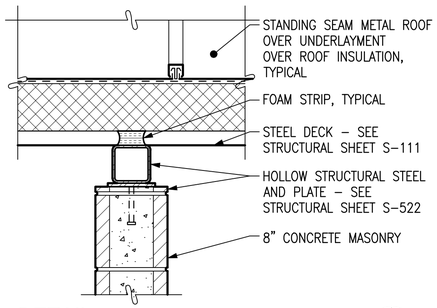

DETAIL
SCALE: 1-1/2" = 1'-0" A-511 D2

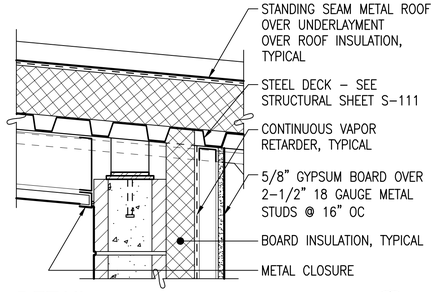

DETAIL
SCALE: 1-1/2" = 1'-0" A-511 D3

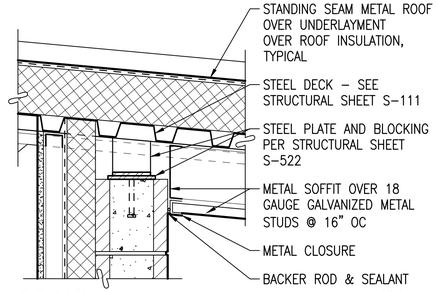

DETAIL
SCALE: 1-1/2" = 1'-0" A-511 D4

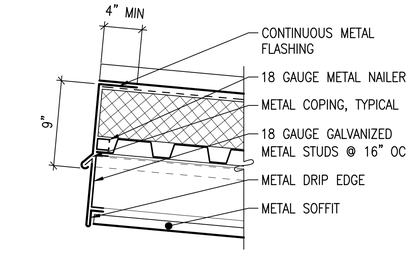

DETAIL
SCALE: 1-1/2" = 1'-0" A-111 D5

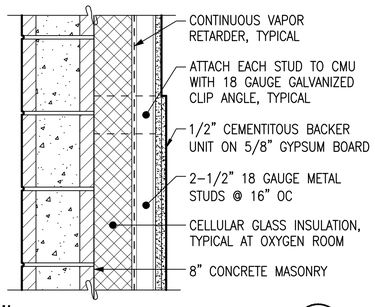

DETAIL
SCALE: 1-1/2" = 1'-0" A-511 C1

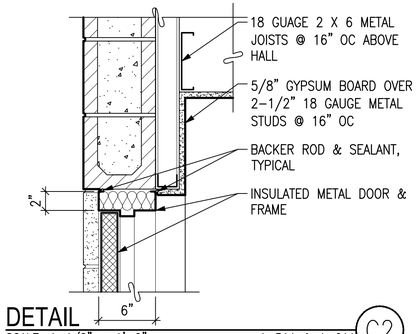

DETAIL
SCALE: 1-1/2" = 1'-0" A-511 & A-611 C2

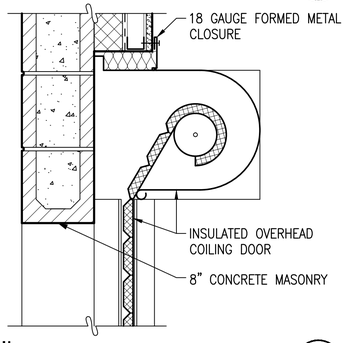

DETAIL
SCALE: 1-1/2" = 1'-0" A-511 & A-611 C3

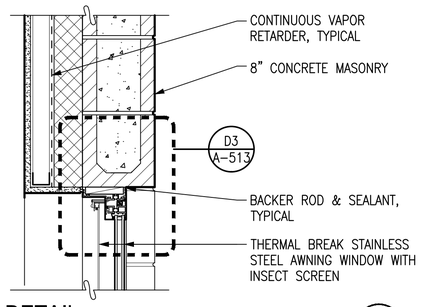

DETAIL
SCALE: 1-1/2" = 1'-0" A-511 C4

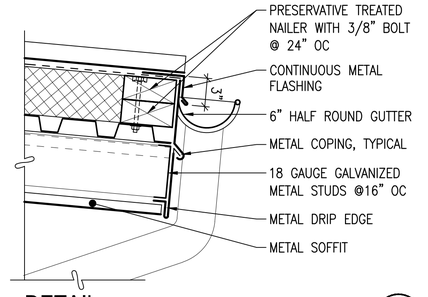

DETAIL
SCALE: 1-1/2" = 1'-0" A-111 C5

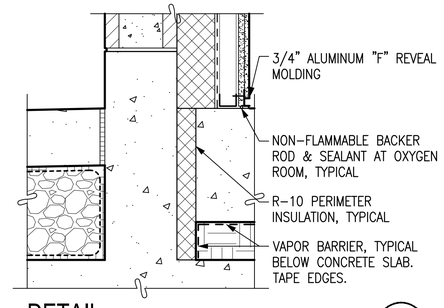

DETAIL
SCALE: 1-1/2" = 1'-0" A-511 B1

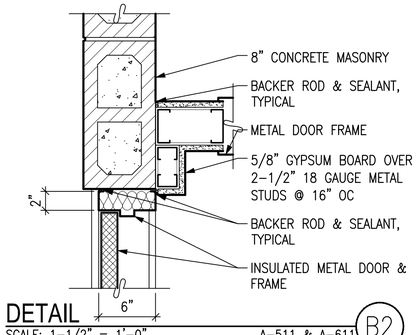

DETAIL
SCALE: 1-1/2" = 1'-0" A-511 & A-611 B2

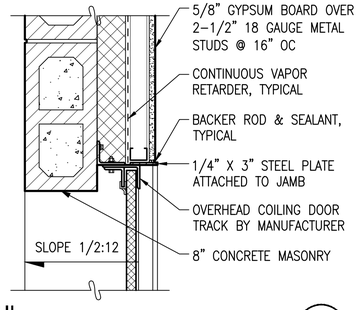

DETAIL
SCALE: 1-1/2" = 1'-0" A-511 & A-611 B3

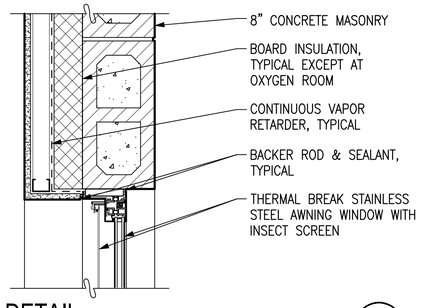

DETAIL
SCALE: 1-1/2" = 1'-0" A-511 B4

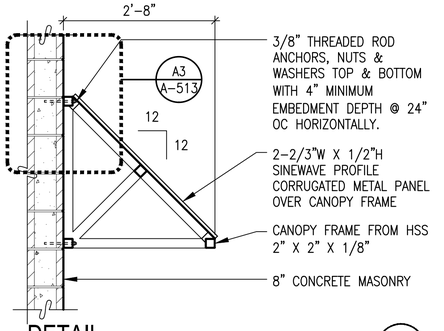

DETAIL
SCALE: 3/4"=1'-0" A-211 A1

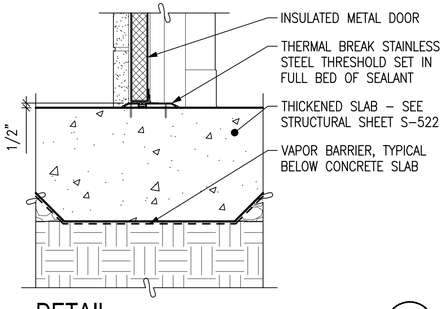

DETAIL
SCALE: 1-1/2" = 1'-0" A-511 & A-611 A2

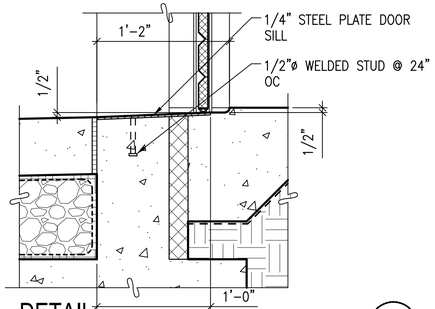

DETAIL
SCALE: 1-1/2" = 1'-0" A-511 & A-611 A3

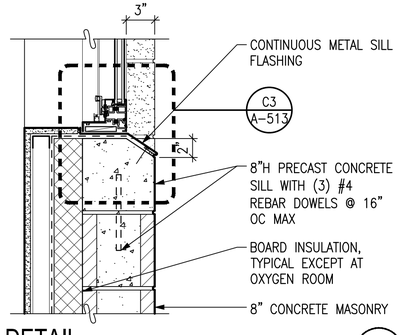

DETAIL
SCALE: 1-1/2" = 1'-0" A-511 A4

1-1/2" = 1'-0"
0 1 2

3/4" = 1'-0"
0 1 2 4

APPR	DATE	DESCRIPTION	SYM

NAVFAC

4899 REGISTERED ARCHITECT
Wallace S. Fraser
WALLACE S. FRASER
STATE OF WASHINGTON
SEAL

FRASER + FOGLE architects
701 N 36TH STREET, SUITE 330
SEATTLE, WA 98103
A/E INFO

APPROVED
FOR COMMANDER NAVFAC 3/2/15

ACTIVITY
NAS WHIDBEY ISLAND

SATISFACTORY TO DATE
DES RH | DRW RH | CHK WF
<<PM/DM>> JOSEPH KISIDAY
BRANCH MANAGER
CHIEF ENG/ARCH
<<XXX>>

DEPARTMENT OF THE NAVY
NAVAL FACILITIES ENGINEERING COMMAND – NORTHWEST
NAVAL AIR STATION WHIDBEY ISLAND
NAVAL FACILITIES ENGINEERING COMMAND
AULT FIELD – OAK HARBOR, WA
NAVAL AIR STATION WHIDBEY ISLAND
OAK HARBOR, WA
FY-15 MCON PROJECT P-259 P-8A AIRCRAFT APRON EXPANSION - PART A
LOX PLANT – DETAILS

SCALE: AS NOTED
EPROJECT NO.:
CONSTR. CONTR. NO.
N44255-15-C-6003
NAVFAC DRAWING NO.
1603043 9
SHEET 185 OF 302
A-512

DRAWFORM REVISION: 10 MARCH 2009

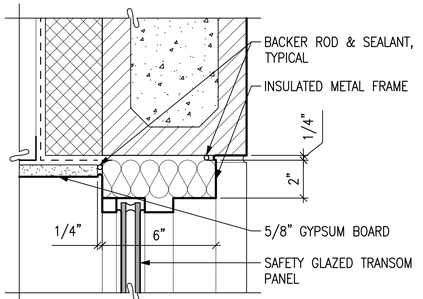

TRANSOM HEAD (JAMB SIM) D1

SCALE: 3" = 1'-0" A-611

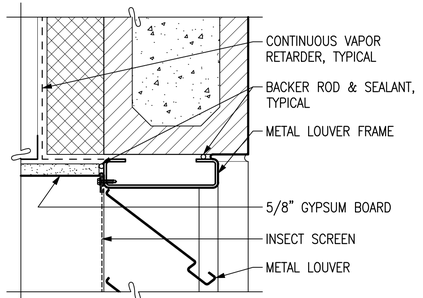

LOUVER HEAD (JAMB SIM) D2

SCALE: 3" = 1'-0" A-211

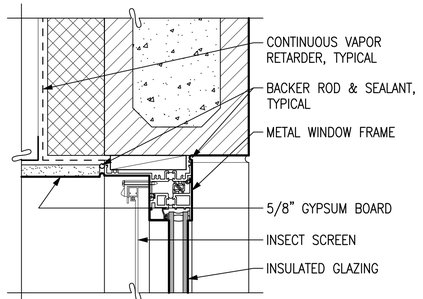

WINDOW HEAD (JAMB SIM) D3

SCALE: 3" = 1'-0" A-512

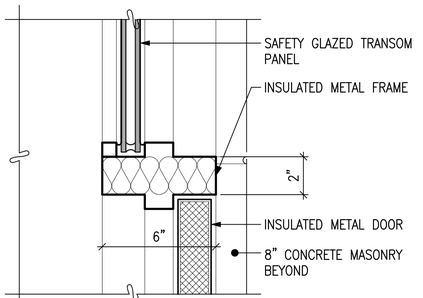

DOOR MULLION C1

SCALE: 3" = 1'-0" A-611

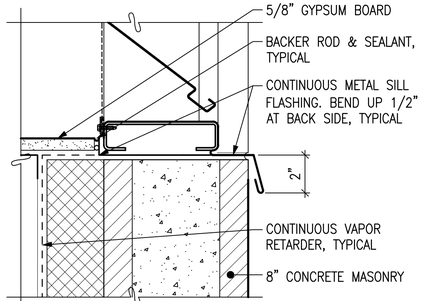

LOUVER SILL C2

SCALE: 3" = 1'-0" A-211

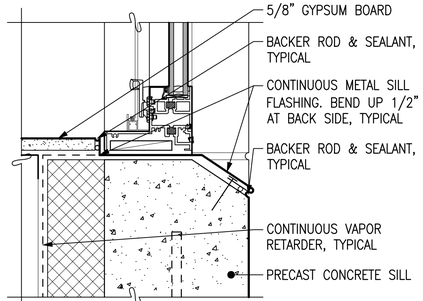

WINDOW SILL C3

SCALE: 3" = 1'-0" A-512

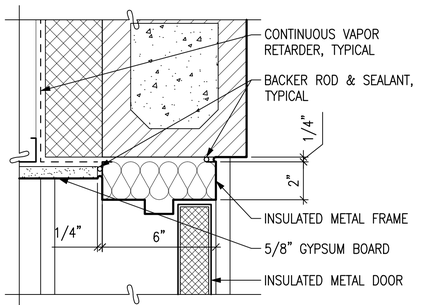

DOOR JAMB B1

SCALE: 3" = 1'-0" A-611

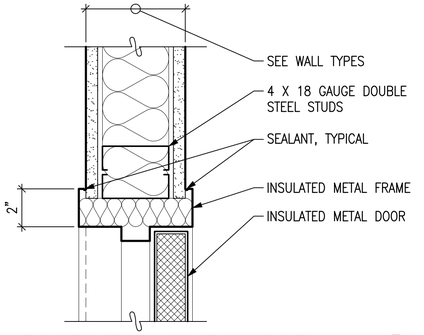

DOOR HEAD (JAMB SIMILAR) B2

SCALE: 3" = 1'-0" A-611

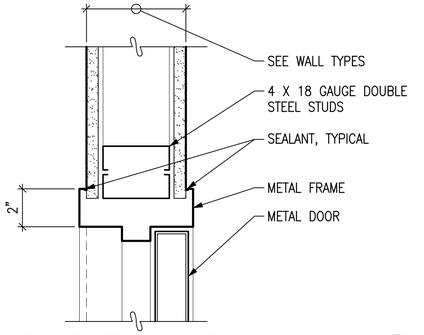

DOOR HEAD (JAMB SIM) B3

SCALE: 3" = 1'-0" A-611

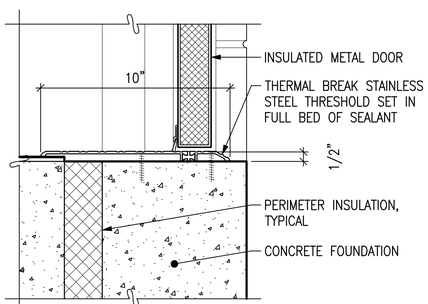

DOOR THRESHOLD A1

SCALE: 3" = 1'-0" A-611

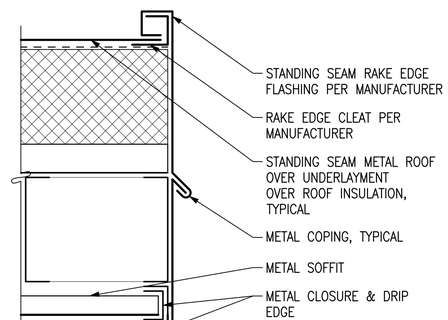

RAKE EDGE A2

SCALE: 3" = 1'-0" A-512

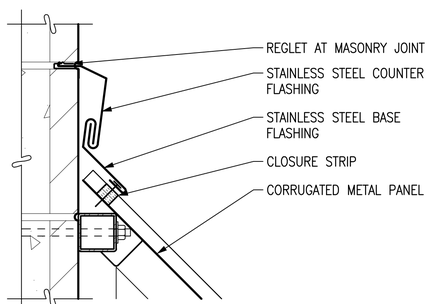

CANOPY FLASHING A3

SCALE: 3" = 1'-0" A-611

3" = 1'-0"

0 1

NO.	DESCRIPTION	DATE	APPR

NAVFAC

4899 REGISTERED ARCHITECT
WALLACE S. FRASER
STATE OF WASHINGTON
SEAL

FRASER + FOGLE architects
701 N 36TH STREET, SUITE 330
SEATTLE, WA 98103
A/E INFO

APPROVED
FOR COMMANDER NAVFAC 3/2/15

ACTIVITY
NAS WHIDBEY ISLAND

SATISFACTORY TO DATE

DES	RH	DRW	RH	CHK	WF

<<PM/DM>> JOSEPH KISIDAY
BRANCH MANAGER
CHIEF ENG./ARCH
<<XXX>>

DEPARTMENT OF THE NAVY
NAVAL FACILITIES ENGINEERING COMMAND
NAVAL AIR STATION WHIDBEY ISLAND

NAVAL FACILITIES ENGINEERING COMMAND ~ NORTHWEST
AULT FIELD - OAK HARBOR, WA

NAVAL AIR STATION WHIDBEY ISLAND
OAK HARBOR, WA

FY-15 MCON PROJECT P-259 P-8A AIRCRAFT APRON EXPANSION - PART A

LOX PLANT – DETAILS

SCALE: AS NOTED
EPROJECT NO.:
CONSTR. CONTR. NO.
N44255-15-C-6003
NAVFAC DRAWING NO.
16030440
SHEET 186 OF 302

A-513

DRAWFORM REVISION: 10 MARCH 2009

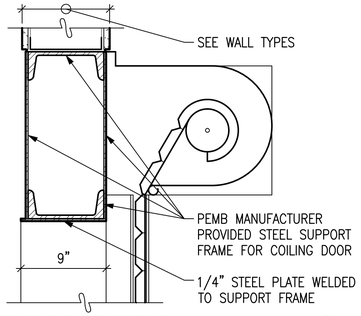

COILING DOOR HEAD (D1)
SCALE: 1-1/2" = 1'-0" — A-121 & A-621

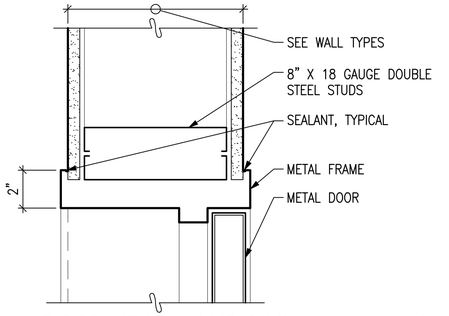

DOOR HEAD (JAMB SIM) (D2)
SCALE: 3" = 1'-0" — A-621

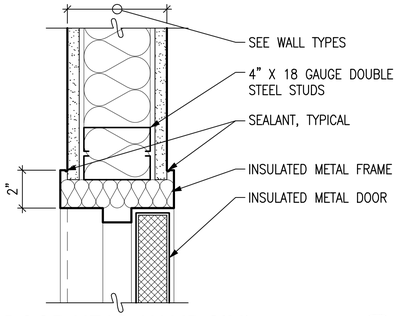

DOOR HEAD (JAMB SIM) (D3)
SCALE: 3" = 1'-0" — A-621

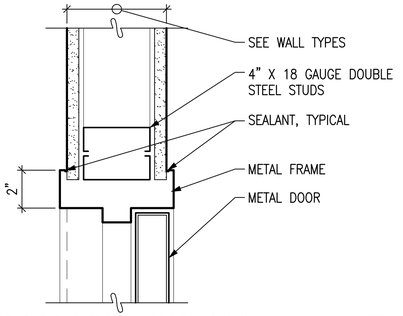

DOOR HEAD (JAMB SIM) (D4)
SCALE: 3" = 1'-0" — A-621

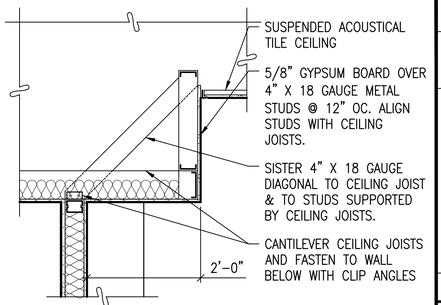

GYPSUM SOFFIT (D5)
SCALE: 3/4" = 1'-0" — A-421

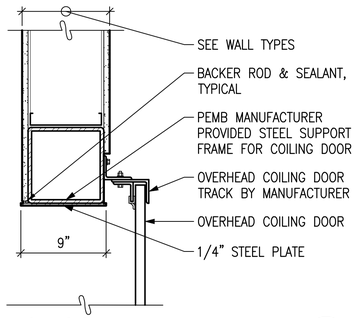

COILING DOOR JAMB (C1)
SCALE: 1-1/2" = 1'-0" — A-121 & A-621

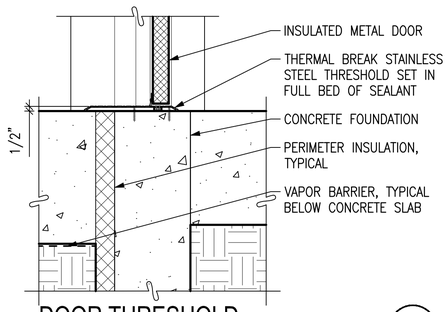

DOOR THRESHOLD (C2)
SCALE: 1-1/2" = 1'-0" — A-621

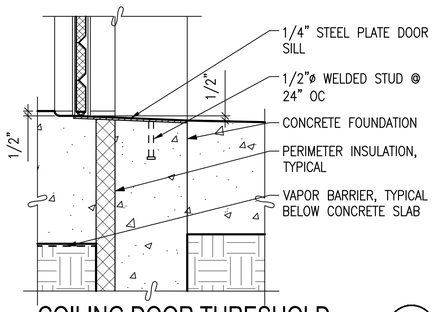

COILING DOOR THRESHOLD (C3)
SCALE: 1-1/2" = 1'-0" — A-621

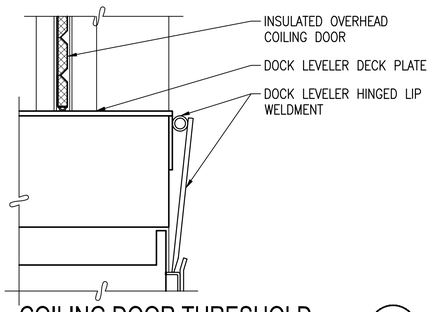

COILING DOOR THRESHOLD (C4)
SCALE: 1-1/2" = 1'-0" — A-621

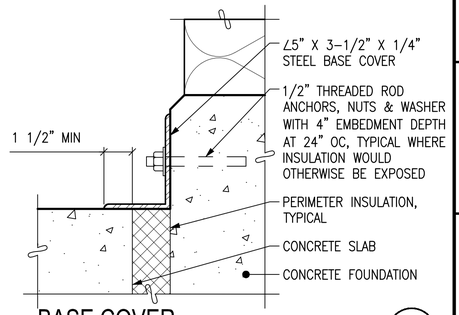

BASE COVER (C5)
SCALE: 3" = 1'-0" — A-321

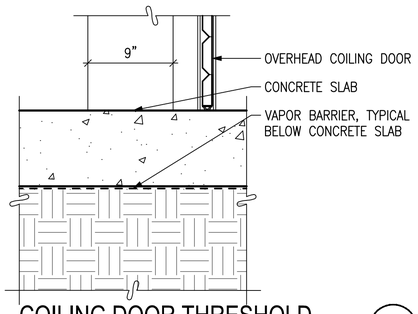

COILING DOOR THRESHOLD (B1)
SCALE: 1-1/2" = 1'-0" — A-621

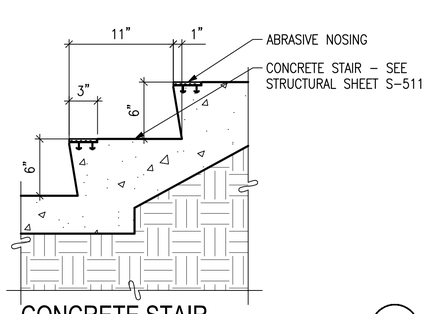

CONCRETE STAIR (B2)
SCALE: 1-1/2" = 1'-0" — A-121

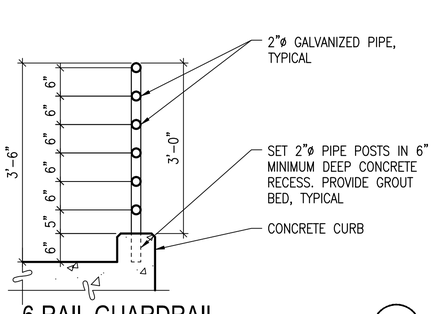

6-RAIL GUARDRAIL (B3)
SCALE: 3/4" = 1'-0" — A-221 & A-321

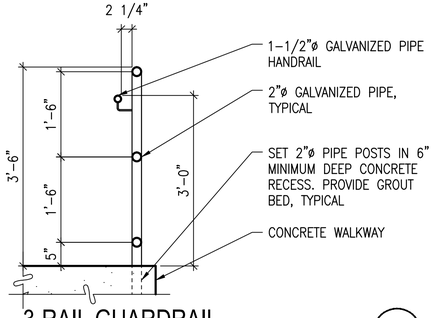

3-RAIL GUARDRAIL (B4)
SCALE: 3/4" = 1'-0" — A-221

3/4" = 1'-0"
0 1 2 4

1-1/2" = 1'-0"
0 1 2

3" = 1'-0"
0 1

APPR | DATE | DESCRIPTION | STM

NAVFAC

4899 REGISTERED ARCHITECT
WALLACE S. FRASER
STATE OF WASHINGTON
SEAL

FRASER + FOGLE architects
701 N 36TH STREET, SUITE 330
SEATTLE, WA 98103
A/E INFO

APPROVED
FOR COMMANDER NAVFAC 3/2/15

ACTIVITY
NAS WHIDBEY ISLAND

SATISFACTORY TO DATE
DES RH | DRW RH | CHK WF
<<PM/DM>> JOSEPH KISIDAY
BRANCH MANAGER
CHIEF ENG/ARCH
<<XXX>>

DEPARTMENT OF THE NAVY
NAVAL FACILITIES ENGINEERING COMMAND – NORTHWEST
NAVAL AIR STATION WHIDBEY ISLAND
NAVAL FACILITIES ENGINEERING COMMAND – NORTHWEST
AULT FIELD – OAK HARBOR, WA
NAVAL AIR STATION WHIDBEY ISLAND
OAK HARBOR, WA

FY-15 MCON PROJECT P-259 P-8A AIRCRAFT APRON EXPANSION - PART A

SONOBUOY ISSUE/STORAGE FACILITY – DETAILS

SCALE: AS NOTED
EPROJECT NO.:
CONSTR. CONTR. NO.
N44255-15-C-6003
NAVFAC DRAWING NO.
16030441
SHEET 187 OF 302

A-521

DRAWFORM REVISION: 10 MARCH 2009

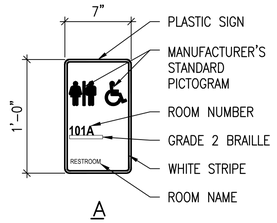

A

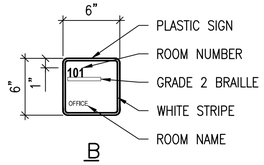

B

NOTES:
1. MOUNT SIGNS OUTSIDE OF ROOM, ADJACENT TO DOOR, 5" FROM STRIKE SIDE OF JAMB @ 51" AFF TO CENTER LINE OF SIGN. VERIFY LOCATION WITH CONTRACTING OFFICER PRIOR TO INSTALLATION IF LOCATION IS NOT AVAILABLE.
2. SIGN TEXT IS TO BE RAISED 1/32" AND ALL SIGNS TO HAVE GRADE 2 RAISED BRAILLE.
3. VERIFY ALL ROOM NUMBERS & SIGN TEXT W/ CONTRACTING OFFICER PRIOR TO FABRICATION
4. ROOM NUMBERS SHALL BE 1"H TEXT. ROOM NAMES AND CHANGEABLE MESSAGE TEXT SHALL BE 1/2"H.

SIGN TYPES

EXTERIOR LOUVER SCHEDULE

MARK	UNIT SERVES	LOCATION	FUNCTION (INTAKE OR EXHAUST)	CFM	DIMENSIONS W" x H"	GROSS AREA (SQ FT)	MIN FREE AREA %	FREE AREA (SQ FT)	FACE VELOCITY (FPM)	MAX PD (IN WC)
L1	AHU-2	LOX PLANT	INTAKE	455	24 x 16	2.7	40%	1.1	427	0.05
L2	AHU-2	LOX PLANT	EXHAUST	340	16 x 16	1.8	38%	0.7	503	0.06
L3	EF-2	LOX PLANT	EXHAUST	100	16 x 16	1.8	38%	0.7	148	0.07
L4	AHU-3	LOX PLANT	INTAKE	1,460	32 x 24	5.3	45%	2.4	608	0.08
L5	AHU-3	LOX PLANT	EXHAUST	745	32 x 16	3.6	41%	1.5	511	0.09
L6	EF-1	LOX PLANT	EXHAUST	630	24 x 16	2.7	40%	1.1	591	0.10
L7	EF-1	SONOBOUY ISSUE / STORAGE FACILITY	EXHAUST	225	12 x 18	1.5	54%	0.8	278	0.05
L8	SF-1	SONOBOUY ISSUE / STORAGE FACILITY	INTAKE	535	24 x 24	4.0	44%	1.8	304	0.05
L9	SF-2	SONOBOUY ISSUE / STORAGE FACILITY	INTAKE	1,190	30 x 30	6.3	48%	3.0	397	0.05

1-1/2" = 1'-0"
0 1 2

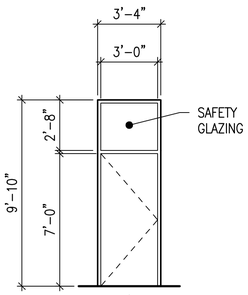

A

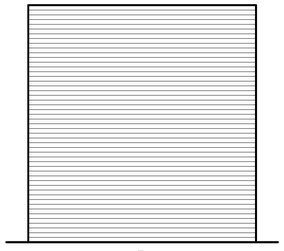

B

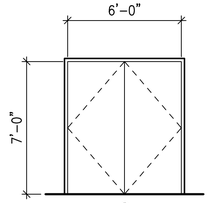

C

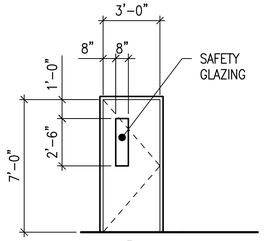

D

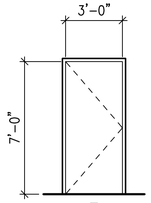

E

DOOR TYPES

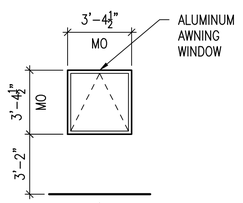

A

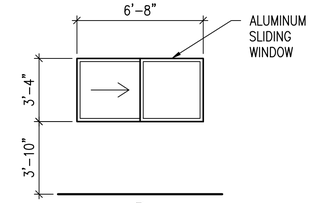

B

WINDOW TYPES

NOTE: PROVIDE WINDOW BLINDS & SCREENS FOR EACH WINDOW

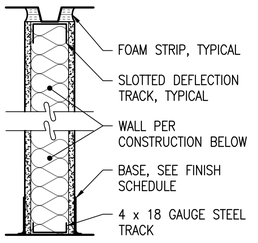

SECTION

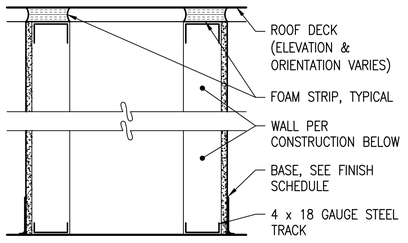

SECTION

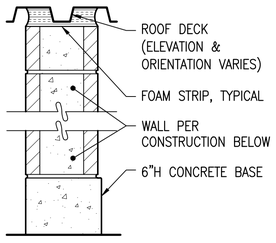

SECTION

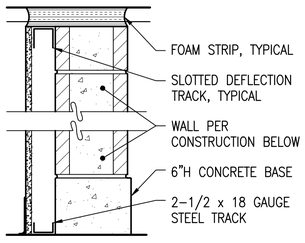

SECTION

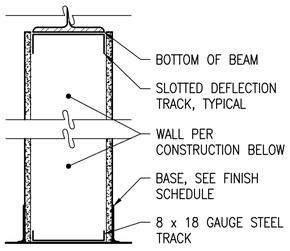

SECTION

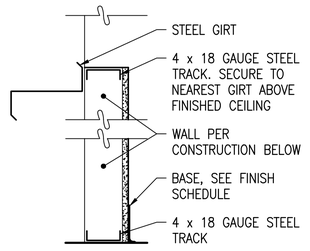

SECTION

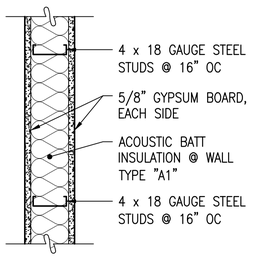

PLAN

WALL TYPE "A", "A1"

SCALE: 1 1/2"=1'-0"

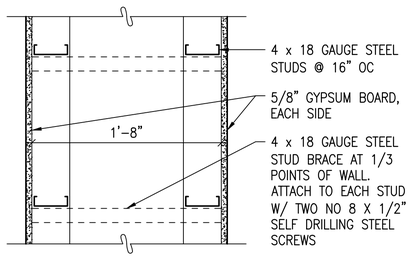

PLAN

WALL TYPE "B"

SCALE: 1 1/2"=1'-0"

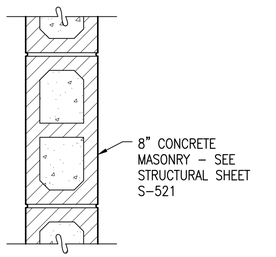

PLAN

WALL TYPE "C"

SCALE: 1 1/2"=1'-0"

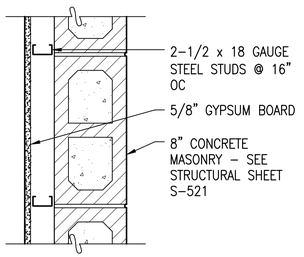

PLAN

WALL TYPE "D"

SCALE: 1 1/2"=1'-0"

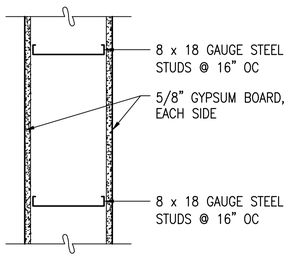

PLAN

WALL TYPE "E"

SCALE: 1 1/2"=1'-0"

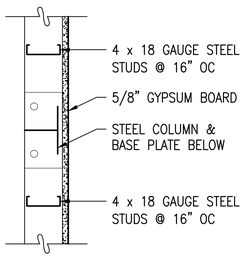

PLAN

WALL TYPE "F"

SCALE: 1 1/2"=1'-0"

WALL TYPES

NAVFAC

4899 REGISTERED ARCHITECT
Wallace S. Fraser
WALLACE S. FRASER
STATE OF WASHINGTON
SEAL

FRASER + FOGLE architects
701 N 36TH STREET, SUITE 330
SEATTLE, WA 98103
A/E INFO

APPROVED
FOR COMMANDER NAVFAC 3/2/15

ACTIVITY
NAS WHIDBEY ISLAND

SATISFACTORY TO DATE
DES RH DRW RH CHK WF
<<PM/DM>> JOSEPH KISIDAY
BRANCH MANAGER
CHIEF ENG/ARCH
<<XXX>>

DEPARTMENT OF THE NAVY
NAVAL FACILITIES ENGINEERING COMMAND
NAVAL AIR STATION WHIDBEY ISLAND

NAVAL FACILITIES ENGINEERING COMMAND – NORTHWEST
AULT FIELD – OAK HARBOR, WA
NAVAL AIR STATION WHIDBEY ISLAND
OAK HARBOR, WA
FY-15 MCON PROJECT P-259 P-8A AIRCRAFT APRON EXPANSION - PART A
SIGN, DOOR, WINDOW, WALL TYPES & LOUVER SCHEDULE

SCALE: AS NOTED
EPROJECT NO.:
CONSTR. CONTR. NO.
N44255-15-C-6003
NAVFAC DRAWING NO.
16030442
SHEET 188 OF 302
A-601
DRAWFORM REVISION: 10 MARCH 2009

APPR | DATE | DESCRIPTION | SYM

ROOM FINISH SCHEDULE - LOX PLANT

NO	ROOM NAME	FLOOR		BASE		WALL		WAINSCOT			CEILING			NOTES
		MATERIAL	FINISH	MATERIAL	HT	MATERIAL	FINISH	MATERIAL	FINISH	HT	MATERIAL	FINISH	HT	
101	OFFICE	RESINOUS	–	RESINOUS	4"	GB	PT2	–	–	–	SATC	–	9'–10"	–
102	HALL	RESINOUS	–	RESINOUS	4"	GB	PT2	–	–	–	GB	PT2	8'–0"	–
102A	RESTROOM	RESINOUS	–	RESINOUS	4"	GB	–	SS	–	8'–0"	GB	PT2	8'–0"	–
102B	ELECTRICAL	RESINOUS	–	RESINOUS	4"	GB	PT2	3/4" PWD	PT2	8'–0"	GB	PT2	8'–0"	1
					–	CMU	–	–	–	–				
103	MAINTENANCE	RESINOUS	–	RESINOUS	6"	GB	PT2	1/2" CBU	PT2	8'–0"	OPEN TO STRUCTURE	PT2	VARIES	2
					–	CMU	–	–	–	–				
104	NITROGEN	RESINOUS	–	RESINOUS	6"	GB	PT2	1/2" CBU	PT2	8'–0"	OPEN TO STRUCTURE	PT2	VARIES	2
					–	CMU	–	–	–	–				
105	OXYGEN	RESINOUS	–	"J" MOLD	3/4"	GB	PT2	1/2" CBU	PT2	8'–0"	OPEN TO STRUCTURE	PT2	VARIES	2
				RESINOUS	6"	CMU	–	–	–	–				
106	MECHANICAL	RESINOUS	–	RESINOUS	4"	GB	PT2	3/4" PWD	PT2	8'–0	OPEN TO STRUCTURE	PT2	VARIES	1
						CMU	–	–	–	–				

DOOR SCHEDULE - LOX PLANT

NO	DOOR						FRAME		DETAIL				HARDWARE GROUP	NOTES
	TYPE	OPERATION	WIDTH	HEIGHT	MTRL	FINISH	MTRL	FINISH	HEAD	MULLION	JAMB	THRESHOLD		
001–1	A	SWING	3'–0"	7'–0"	STEEL	PT1	STEEL	PT1	D1/A–513	C1/A–513	B1/A–513	A1/A–513	1	–
001–2	B	COILING	12'–0"	12'–6"	STEEL	PT1	–	–	C3/A–512	–	B3/A–512	A3/A–512	2	–
001–3	A	SWING	3'–0"	7'–0"	STEEL	PT1	STEEL	PT1	D1/A–513	C1/A–513	B1/A–513	A1/A–513	1	–
001–4	A	SWING	3'–0"	7'–0"	STEEL	PT1	STEEL	PT1	D1/A–513	C1/A–513	B1/A–513	A1/A–513	1	–
001–5	B	COILING	12'–0"	12'–6"	STEEL	PT1	–	–	C3/A–512	–	B3/A–512	A3/A–512	2	–
001–6	A	SWING	3'–0"	7'–0"	STEEL	PT1	STEEL	PT1	D1/A–513	C1/A–513	B1/A–513	A1/A–513	1	–
001–7	B	COILING	12'–0"	12'–6"	STEEL	PT1	–	–	C3/A–512 SIMILAR	–	B3/A–512 SIMILAR	A3/A–512 SIMILAR	2	–
001–8	A	SWING	3'–0"	7'–0"	STEEL	PT1	STEEL	PT1	D1/A–513 SIMILAR	C1/A–513 SIMILAR	B1/A–513 SIMILAR	A1/A–513 SIMILAR	1	–
001–9	C	SWING	3'–0" (PAIR)	7'–0"	STEEL	PT1	STEEL	PT1	C2/A–512 SIMLAR	–	B1/A–513	A1/A–513	3	–
102A–1	A	SWING	3'–0"	7'–0"	STEEL	PT1	STEEL	PT1	B2/A–513	–	B2/A–512 SIMILAR	–	4	1
102B–1	A	SWING	3'–0"	7'–0"	STEEL	PT1	STEEL	PT1	B3/A–513	–	B3/A–512 SIMILAR	–	9	2
103–1	D	SWING	3'–0"	7'–0"	STEEL	PT1	STEEL	PT1	C2/A–512	–	B2/A–512	A2/A–512	6	–

INTERIOR COLOR SCHEDULE - LOX PLANT

MATERIALS	DESIGNATION	MANUFACTURER	COLOR	LOCATION
RESINOUS FLOORING	RESINOUS	STONHARD	STONTOP TOUPE COAST	FLOORS & WALL BASE
PAINT	PT1	SHERWIN WILLIAMS	SW 7505 MANOR HOUSE	DOORS & TRIM
PAINT	PT2	SHERWIN WILLIAMS	SW 7002 DOWNY	WALLS & CEILINGS
PLASTIC LAMINATE	PL1	WILSONART	4842–60 CANYON ZEPHYR	CASEWORK & CABINETS
PLASTIC LAMINATE	PL2	WILSONART	4811 SILICON EV	COUNTERTOPS & BACKSPLASHES
SOLID SURFACE	SS	CORIAN	CANVAS	RESTROOM WAINSCOT
WINDOW BLINDS	WB	GRABER	1" ALUMINUM HORIZONTAL	OFFICE
SUSPENDED ACOUSTICAL TILE	SAT	AMRSTRONG	CORTEGA	OFFICE

EXTERIOR COLOR SCHEDULE - LOX PLANT

MATERIALS	MANUFACTURER	COLOR
CONCRETE MASONRY UNITS	TRENDSTONE	GROUND FACE – PEARL
STANDING SEAM METAL ROOFING	VARCO PRUDEN (VP)	COOL GRANITE GRAY

SHEET GENERAL NOTES

1. SEE SHEET A–601 FOR DOOR TYPES
2. SEE SHEET A–601 FOR WINDOW TYPES
3. SEE SHEET A–601 FOR SIGN TYPES

DOOR SCHEDULE NOTES

1. PROVIDE ROOM SIGN TYPE "A"
2. PROVIDE ROOM SIGN TYPE "B"

FINISH SCHEDULE NOTES

1. PLYWOOD WAINSCOT @ GYPSUM BOARD WALLS ONLY
2. CEMENTITIOUS BACKER BOARD WAINSCOT @ GYPSUM BOARD WALLS ONLY

COLOR SCHEDULE NOTES

1. MANUFACTURERS NAMES AND COLORS ARE FOR REFERENCE ONLY, AND ARE NOT INTENDED TO LIMIT SELECTIONS FROM OTHER MANUFACTURERS MEETING THE SPECIFICATIONS

EXTERIOR COLOR NOTES

1. ALL EXTERIOR DOORS, DOOR FRAMES, WINDOW FRAMES, LOUVERS & METAL SOFFITS TO MATCH VARCO PRUDEN COLOR: COOL GRANITE GRAY

APPR | DATE | DESCRIPTION | SYM

NAVFAC

4899 REGISTERED ARCHITECT
WALLACE S. FRASER
STATE OF WASHINGTON
SEAL

FRASER + FOGLE architects
701 N 36TH STREET, SUITE 330
SEATTLE, WA 98103
A/E INFO

APPROVED
FOR COMMANDER NAVFAC 3/2/15

ACTIVITY
NAS WHIDBEY ISLAND

SATISFACTORY TO DATE
DES RH | DRW RH | CHK WF
<<PM/DM>> JOSEPH KISIDAY
BRANCH MANAGER
CHIEF ENG./ARCH
<<XXX>>

DEPARTMENT OF THE NAVY
NAVAL FACILITIES ENGINEERING COMMAND
NAVAL AIR STATION WHIDBEY ISLAND

NAVAL FACILITIES ENGINEERING COMMAND ~ NORTHWEST
AULT FIELD – OAK HARBOR, WA

NAVAL AIR STATION WHIDBEY ISLAND
OAK HARBOR, WA

FY-15 MCON PROJECT P-259 P-8A AIRCRAFT APRON EXPANSION - PART A

LOX PLANT – SCHEDULES

SCALE: AS NOTED
EPROJECT NO.:
CONSTR. CONTR. NO.
N44255–15–C–6003
NAVFAC DRAWING NO.
16030443
SHEET 189 OF 302

A-611

DRAWFORM REVISION: 10 MARCH 2009

ROOM FINISH SCHEDULE - SONOBUOY ISSUE / STORAGE FACILITY

NO	ROOM NAME	FLOOR		BASE		WALL		WAINSCOT			CEILING			NOTES
		MATERIAL	FINISH	MATERIAL	HT	MATERIAL	FINISH	MATERIAL	FINISH	HT	MATERIAL	FINISH	HT	
101	OFFICE	CARPET	–	RB	4"	GB	PT2	–	–	–	SAT	–	9'–10"	–
		RESINOUS	–	RESINOUS	4"						GB	PT2	8'–0"	–
101A	RESTROOM	RESINOUS	–	RESINOUS	4"	GB	–	SS	–	8'–0"	GB	PT2	8'–0"	–
101B	JANITOR	RESINOUS	–	RB	4"	GB	PT2	3/4" PWD	PT2	8'–0"	GB	PT2	8'–0"	1
102	SONOBOUY STORAGE	CONCRETE	SEALED	RB	6"	GB	PT2	3/4" PWD	PT2	8'–0"	EXPOSED	WHITE	VARIES	3
				CONCRETE	6"	EXPOSED	WHITE	3/4" PWD	PT2	16'–0"				
103	SONOBOUY ISSUE	CONCRETE	SEALED	RB	6"	GB	PT2	3/4" PWD	PT2	8'–0"	EXPOSED	WHITE	VARIES	4
				CONCRETE	6"	EXPOSED	WHITE	3/4" PWD	PT2	16'–0"				
104	MECH/ELEC	CONCRETE	SEALED	RB	6"	GB	PT2	3/4" PWD	PT2	8'–0"	EXPOSED	WHITE	VARIES	2
				CONCRETE	6"	EXPOSED	WHITE	3/4" PWD	PT2	8'–0"				

DOOR SCHEDULE - SONOBUOY ISSUE / STORAGE FACILITY

NO	DOOR						FRAME		DETAIL			HARDWARE GROUP	NOTES
	TYPE	OPERATION	WIDTH	HEIGHT	MTRL	FINISH	MTRL	FINISH	HEAD	JAMB	THRESHOLD		
001–1	A	SWING	3'–0"	7'–0"	STEEL	PT1	STEEL	PT1	–	–	C2/A–521	1	3
001–2	B	COILING	8'–0"	9'–0"	STEEL	PT1	–	–	–	–	C4/A–521	2	3
001–3	A	SWING	3'–0"	7'–0"	STEEL	PT1	STEEL	PT1	–	–	C2/A–521	1	3
001–4	B	COILING	12'–0"	15'–0"	STEEL	PT1	–	–	–	–	C3/A–521	2	3
001–5	B	COILING	12'–0"	15'–0"	STEEL	PT1	–	–	–	–	C3/A–521	2	3
001–6	A	SWING	3'–0"	7'–0"	STEEL	PT1	STEEL	PT1	–	–	C2/A–521	1	3
001–7	C	SWING	3'–0" (PAIR)	7'–0"	STEEL	PT1	STEEL	PT1	–	–	C2/A–521	7	3
101–1	D	SWING	3'–0"	7'–0"	STEEL	PT1	STEEL	PT1	D2/A–521	D2/A–521 SIMILAR	–	8	–
101–2	D	SWING	3'–0"	7'–0"	STEEL	PT1	STEEL	PT1	D2/A–521	D2/A–521 SIMILAR	–	6	–
101A–1	E	SWING	3'–0"	7'–0"	STEEL	PT1	STEEL	PT1	D3/A–521	D3/A–521 SIMILAR	–	4	1
101B–1	E	SWING	3'–0"	7'–0"	STEEL	PT1	STEEL	PT1	D4/A–521	D4/A–521 SIMILAR	–	5	2
102–1	B	COILING	12'–0"	15'–0"	STEEL	PT1	–	–	D1/A–521	C1/A–521	B1/A–521	2	–
103–1	D	SWING	3'–0"	7'–0"	STEEL	PT1	STEEL	PT1	D2/A–521	D2/A–521 SIMILAR	–	8	–

INTERIOR COLOR SCHEDULE - SONOBUOY ISSUE / STORAGE FACILITY

MATERIALS	DESIGNATION	MANUFACTURER	COLOR	LOCATION
RESINOUS FLOORING	RESINOUS	STONHARD	STONTOP TOUPE COAST	FLOORS & WALL BASE
RESILIENT BASE	RB	MANNINGTON	PREMIUM EDGE (TP) 911 SABLE	GYPSUM BOARD WALLS
CARPET TILE	CARPET	MANNINGTON	BAROCOA II CHA–CHA	OFFICE
PAINT	PT1	SHERWIN WILLIAMS	SW 7505 MANOR HOUSE	DOORS & TRIM
PAINT	PT2	SHERWIN WILLIAMS	SW 6140 MODERATE WHITE	WALLS & CEILINGS
PLASTIC LAMINATE	PL	WILSONART	4842–60 CANYON ZEPHYR	CASEWORK & CABINETS
SOLID SURFACE	SS	CORIAN	CANVAS	COUNTERTOPS & RESTROOM
WINDOW BLINDS	WB	GRABER	1" ALUMINUM HORIZONTAL	OFFICE
SUSPENDED ACOUSTICAL TILE	SAT	AMRSTRONG	CORTEGA	OFFICE

EXTERIOR COLOR SCHEDULE - SONOBUOY FACILITY

MATERIALS	MANUFACTURER	COLOR
STANDING SEAM METAL ROOFING	VARCO PRUDEN	COOL GRANITE GRAY
RIBBED PANEL METAL SIDING	VARCO PRUDEN	COOL GRANITE GRAY
FLAT PANEL METAL SIDING	VARCO PRUDEN	REGAL WHITE

SHEET GENERAL NOTES

1. SEE SHEET A–601 FOR DOOR TYPES
2. SEE SHEET A–601 FOR WINDOW TYPES
3. SEE SHEET A–601 FOR SIGN TYPES

DOOR SCHEDULE NOTES

1. PROVIDE ROOM SIGN TYPE "A"
2. PROVIDE ROOM SIGN TYPE "B"
3. HEAD & SILL DETAIL BY PEB MANUFACTURER

FINISH SCHEDULE NOTES

1. PROVIDE SOLID SURFACE WAINSCOT AT EAST & SOUTH WALLS ONLY.
2. PROVIDE PLYWOOD WAINSCOT AT ALL WALLS.
3. PROVIDE 16'H PLYWOOD WAINSCOT AT NORTH WALL & NORTH HALF OF EAST & WEST WALLS. PROVIDE 8'H PLYWOOD WAINSCOT AT SOUTH WALL & SOUTH HALF OF EAST & WEST WALLS. REFER TO BUILDING SECTIONS.
4. PROVIDE 16'H PLYWOOD WAINSCOT AT SOUTH WALL & SOUTH HALF OF EAST & WEST WALLS. PROVIDE 8"H PLYWOOD WAINSCOT AT NORTH WALL & NORTH HALF OF EAST & WEST WALLS. REFER TO BUILDING SECTIONS.

COLOR SCHEDULE NOTES

1. MANUFACTURERS NAMES AND COLORS ARE FOR REFERENCE ONLY, AND ARE NOT INTENDED TO LIMIT SELECTIONS FROM OTHER MANUFACTURERS MEETING THE SPECIFICATIONS

EXTERIOR COLOR NOTES

1. ALL EXTERIOR DOORS, DOOR FRAMES, WINDOW FRAMES & LOUVERS TO MATCH VARCO PRUDEN COLOR: COOL GRANITE GRAY

APPR | DATE | DESCRIPTION | SYM

NAVFAC

4899 REGISTERED ARCHITECT
WALLACE S. FRASER
STATE OF WASHINGTON
SEAL

FRASER + FOGLE architects
701 N 36TH STREET, SUITE 330
SEATTLE, WA 98103
A/E INFO

APPROVED
FOR COMMANDER NAVFAC 3/2/15
ACTIVITY
NAS WHIDBEY ISLAND
SATISFACTORY TO DATE
DES RH DRW RH CHK WF
<<PM/DM>> JOSEPH KISIDAY
BRANCH MANAGER
CHIEF ENG/ARCH
<<XXX>>

DEPARTMENT OF THE NAVY
NAVAL FACILITIES ENGINEERING COMMAND – NORTHWEST
NAVAL AIR STATION WHIDBEY ISLAND AULT FIELD – OAK HARBOR, WA
NAVAL AIR STATION WHIDBEY ISLAND OAK HARBOR, WA
FY-15 MCON PROJECT P-259 P-8A AIRCRAFT APRON EXPANSION - PART A
SONOBUOY ISSUE/STORAGE FACILITY – SCHEDULES

SCALE: AS NOTED
EPROJECT NO.:
CONSTR. CONTR. NO. N44255–15–C–6003
NAVFAC DRAWING NO. 16030444
SHEET 190 OF 302
A-621
DRAWFORM REVISION: 10 MARCH 2009

PLUMBING LEGEND

GENERAL

SYMBOL	ABBREVIATION	DESCRIPTION
		PIPE UP AND DOWN (SINGLE LINE)
		PIPE DOWN (SINGLE LINE)
		DOUBLE LINE PIPE ELBOW UP
		DOUBLE LINE PIPE ELBOW DOWN
		NEW WORK
P-1		PLUMBING SYMBOL
ø	DIA	DIAMETER OR ROUND
		CONNECTING PIPING
		ALARM LIGHT
		ALARM BELL

TITLE
SCALE: M-000

A1 — DETAIL NUMBER OR SECTION LETTER BASED ON SHEET GRIDLINES

DETAIL OR SECTION TITLE

SHEET(S) WHERE DETAIL OR SECTION IS TAKEN FROM

A1 / M-000 — SECTION LETTER BASED ON SHEET GRIDLINES

SECTION TAG

SHEET(S) WHERE SECTION IS LOCATED

A1 / M-000 — DETAIL NUMBER BASED ON SHEET GRIDLINES

DETAIL TAG

SHEET WHERE DETAIL IS LOCATED

1 — KEYNOTE DESIGNATION

KEYNOTE SYMBOL

VALVES & FITTINGS

SYMBOL	ABBREVIATION	DESCRIPTION
		SLEEVE FOR PIPE PENETRATION OF WALL
		FLOW DIRECTION
		FLOW DIRECTION (HIGH POINT TO LOW POINT)
	PG	PRESSURE GAUGE
		CAP
		GAS COCK (PLUG VALVE)
	GV	GATE VALVE
	GLV	GLOBE VALVE
	CKV	CHECK VALVE
	BV	BALL VALVE
	HEDV	HOSE END DRAIN VALVE
	VTR	VENT THROUGH ROOF
	FD	FLOOR DRAIN
	FCO	FLOOR CLEANOUT
M		METER
X		SHOCK ARRESTOR (LETTER DESIGNATES PDI SIZE, SEE SPEC.)
		UNION
	PRV	PRESSURE REGULATING VALVE
	RV	PRESSURE RELIEF VALVE
	DCVA	DOUBLE CHECK VALVE ASSEMBLY
		NEEDLE VALVE
		NOZZLE
	RV	RELIEF VALVE
		SEISMIC SHUT-OFF VALVE
	WCO	WALL CLEANOUT
		Y-TYPE STRAINER W/HOSE END DRAIN VALVE
		Y-TYPE STRAINER

PIPING SYSTEMS

SYMBOL	ABBREVIATION	DESCRIPTION
G	G	NATURAL GAS
T	T	TEPID WATER
A	A	AIR
	CW	COLD WATER
	HW	HOT WATER
	W	WASTE UNDER SLAB
	V	VENT
TP	TP	TRAP PRIMER
		HEAT TRACED PIPING (NOTE: THIS SYMBOL WILL BE USED IN COMBINATION WITH LINETYPE)
NP	NP	NON-POTABLE COLD WATER
F	F	FIRE LINE
FM	FM	FORCEMAIN (SANITARY SEWER)
D	D	DRAIN

ABBREVIATIONS

&	AND
A	AMP
A/C	AIR CONDITIONER
ACD	AUTOMATIC CONTROL DAMPER
AFF	ABOVE FINISHED FLOOR
APD	AIR PRESSURE DROP
ARCH.	ARCHITECTURAL
CD	CEILING DIFFUSER
CG	CEILING GRILLE
CU	CONDENSING UNIT
CFM	CUBIC FEET PER MINUTE
Db	DECIBEL
DB	DRY BULB
DEPT.	DEPARTMENT
DIA	DIAMETER
DN	DOWN
DH	DUCT HEATER
DL	DETECTION LOOP
EAT	ENTERING AIR TEMPERATURE
EL	ELEVATION
ELEC	ELECTRICAL
ERV	ENERGY RECOVERY VENTILATOR
EF	EXHAUST FAN
EG	EXHAUST GRILLE
EWT	ENTERING WATER TEMPERATURE
F	FAHRENHEIT
FB	FILTER BOX
FPM	FEET PER MINUTE
GRD	GRILLES, REGISTERS, DIFFUSERS
HP	HEAT PUMP,HORSEPOWER
ID	INNER DIAMETER
IN	INCH
JAN	JANITOR
KW	KILOWATT
LAT	LEAVING AIR TEMPERATURE
LBS.	POUNDS
LOX	LIQUID OXYGEN
LWT	LEAVING WATER TEMPERATURE
MAX	MAXIMUM
MCA	MINIMUM CIRCUIT AMP
MBH	1000 BRITISH THERMAL UNITS PER HOUR
MECH	MECHANICAL
MFA	MAXIMUM FUSE AMP
MIN	MINIMUM
MNGG	MOBILE NITROGEN GAS GENERATOR
OSA	OUTSIDE AIR
P	PHASE
PE	POLYTHYLENE
PRV	PRESSURE REDUCING VALVE
QTY	QUANTITY
R	RETURN
REG.	REGULATOR
SCR	SILICON CONTROLLED RECTIFIER
SF	SQUARE FEET
SP	STATIC PRESSURE
S	SUPPLY
T-STAT	THERMOSTAT
TYP	TYPICAL
UH	UNIT HEATER
V	VOLTS
VTR	VENT THROUGH ROOF
W/	WITH
WB	WET BULB
WCO	WALL CLEANOUT

PLUMBING DRAWING INDEX

DWG NO	DWG TITLE	NAVFAC DWG NO	SHEET NO.
P-001	PLUMBING LEGEND	16030445	191
P-111	LOX PLANT PLUMBING FLOOR PLAN	16030446	192
P-121	SONOBUOY ISSUE/STORAGE FACILITY PLUMBING FLOOR PLAN	16030447	193
P-145	AIRCRAFT RINSE FACILITY PLAN	16030448	194
P-146	AIRCRAFT RINSE FACILITY FLOOR PLANS	16030449	195
P-411	LOX PLANT ENLARGED PLUMBING PLAN	16030450	196
P-421	SONOBUOY ISSUE/STORAGE FACILITY ENLARGED PLUMBING PLAN	16030451	197
P-501	PLUMBING DETAILS / SECTION	16030452	198
P-502	FIRE RISER DETAILS	16030453	199
P-541	PLUMBING DETAILS / SECTIONS	16030454	200
P-601	PLUMBING SCHEDULES	16030455	201
P-602	PLUMBING SCHEDULES	16030456	202
P-603	PLUMBING DIAGRAMS	16030457	203
PS111	LOX PLANT PLUMBING SITE PLAN	16030458	204
PS121	SONOBUOY ISSUE/STORAGE FACILITY PLUMBING SITE PLAN	16030459	205

L:\PROJECTS\214024 - NAVY - 11D008 - NASWI P252 HANGAR\SCHEDULES\[DRAWING INDEX P-259 PART A & B.XLSX]MECH PART A

SYM	DESCRIPTION	DATE	APPR

NAVFAC

LARRY D. SWARTZ — STATE OF WASHINGTON — 27501 — REGISTERED PROFESSIONAL ENGINEER
2-18-15
SEAL

notkin
mechanical engineers
www.notkin.com
telephone: 206.448.1911
facsimile: 206.448.9485
2301 5th Avenue, Suite 401
Seattle, WA 98121

Contact: Larry Swartz, P.E.
notkin#: 214024
A/E INFO

APPROVED
FOR COMMANDER NAVFAC 3/2/15

ACTIVITY
NAS WHIDBEY ISLAND

SATISFACTORY TO	DATE
DES: BCD	DRW: JML CHK: LDS
<<PM/DM>>	JOSEPH KISIDAY
BRANCH MANAGER	
CHIEF ENG./ARCH	
<<XXX>>	

DEPARTMENT OF THE NAVY
NAVAL FACILITIES ENGINEERING COMMAND
NAVAL AIR STATION WHIDBEY ISLAND

NAVAL FACILITIES ENGINEERING COMMAND ~ NORTHWEST
AULT FIELD - OAK HARBOR, WA

NAVAL AIR STATION WHIDBEY ISLAND
OAK HARBOR, WA

FY-15 MCON PROJECT P-259 P-8A AIRCRAFT
APRON EXPANSION - PART A

PLUMBING LEGEND

SCALE: AS NOTED
EPROJECT NO.:
CONSTR. CONTR. NO.
N44255-15-C-6003
NAVFAC DRAWING NO.
16030445
SHEET 191 OF 302

P-001

DRAWFORM REVISION: 10 MARCH 2009

L:\PROJECTS\214024 - Navy - 11D008 - NASWI P252 Hangar\Drawings\Part A\P-001.dwg, 2/12/2015 6:22:19 PM, x

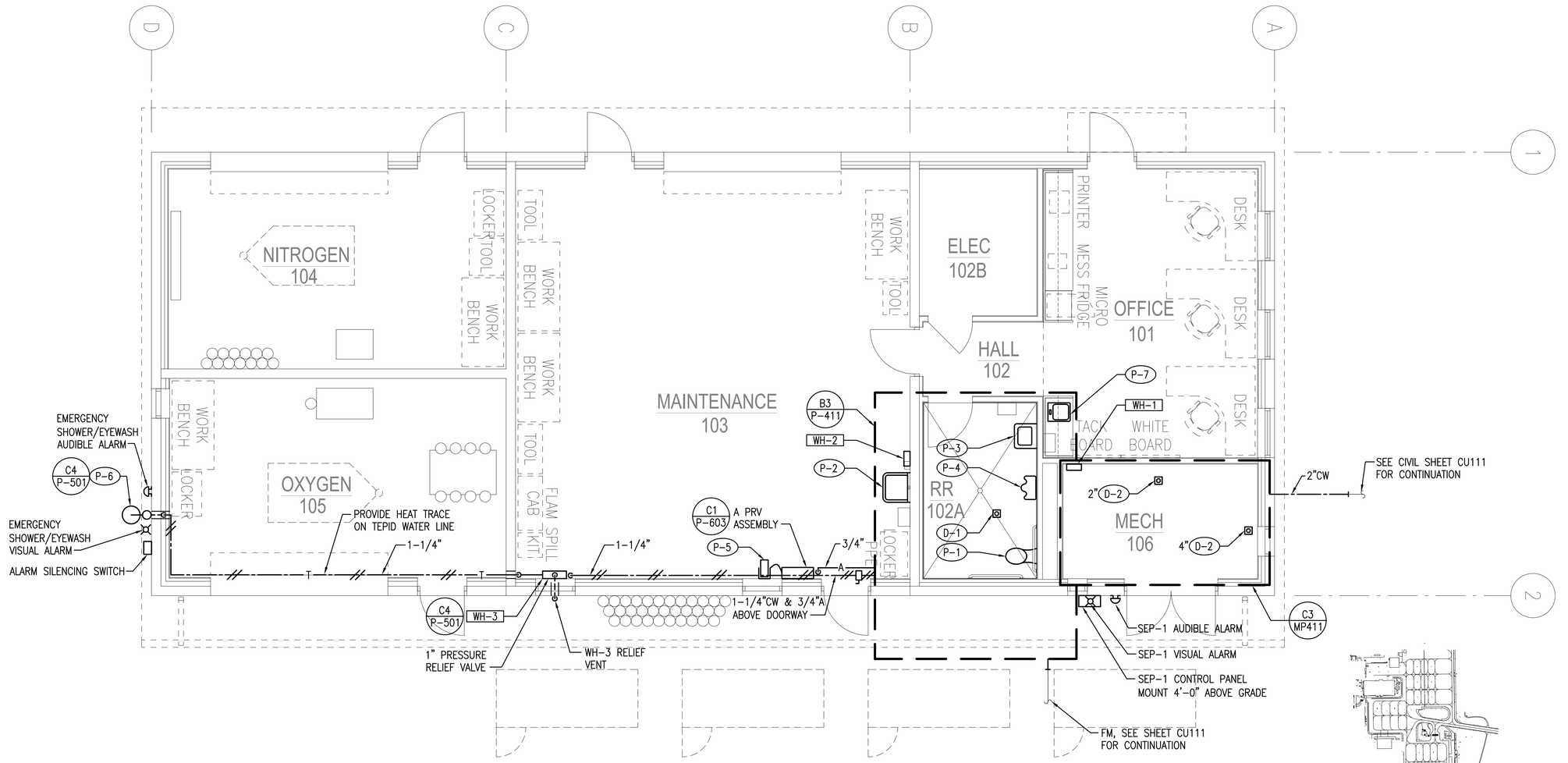

LOX PLANT PLUMBING FLOOR PLAN

SCALE: 1/4"=1'-0"

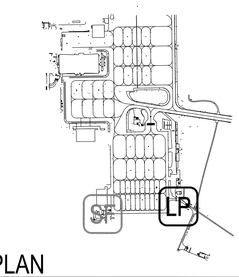

KEY PLAN

SCALE: NTS

LP = GENERAL VICINITY OF LOX PLANT
SF = GENERAL VICINITY OF SONOBUOY ISSUE/STORAGE FACILITY

1/4" = 1'-0"

0 2 4 8 12

SYM	DESCRIPTION	DATE	APPR

NAVFAC

LARRY D. SWARTZ STATE OF WASHINGTON 27501 REGISTERED PROFESSIONAL ENGINEER
2-18-15
SEAL

notkin
mechanical engineers
www.notkin.com
telephone: 206.448.1911
facsimile: 206.448.9485
2301 5th Avenue, Suite 401
Seattle, WA 98121

Contact: Larry Swartz, P.E.
notkin#: 214024
A/E INFO

APPROVED
FOR COMMANDER NAVFAC 3/2/15
ACTIVITY
NAS WHIDBEY ISLAND
SATISFACTORY TO DATE
DES: BCD DRW: JML CHK: LDS
<<PM/DM>> JOSEPH KISIDAY
BRANCH MANAGER
CHIEF ENG/ARCH
<<XXX>>

DEPARTMENT OF THE NAVY
NAVAL FACILITIES ENGINEERING COMMAND
NAVAL FACILITIES ENGINEERING COMMAND ~ NORTHWEST
NAVAL AIR STATION WHIDBEY ISLAND
AULT FIELD - OAK HARBOR, WA
NAVAL AIR STATION WHIDBEY ISLAND
OAK HARBOR, WA
FY-15 MCON PROJECT P-259 P-8A AIRCRAFT APRON EXPANSION - PART A
LOX PLANT PLUMBING FLOOR PLAN

SCALE: AS NOTED
EPROJECT NO.:
CONSTR. CONTR. NO.
N44255-15-C-6003
NAVFAC DRAWING NO.
16030446
SHEET 192 OF 302
P-111
DRAWFORM REVISION: 10 MARCH 2009

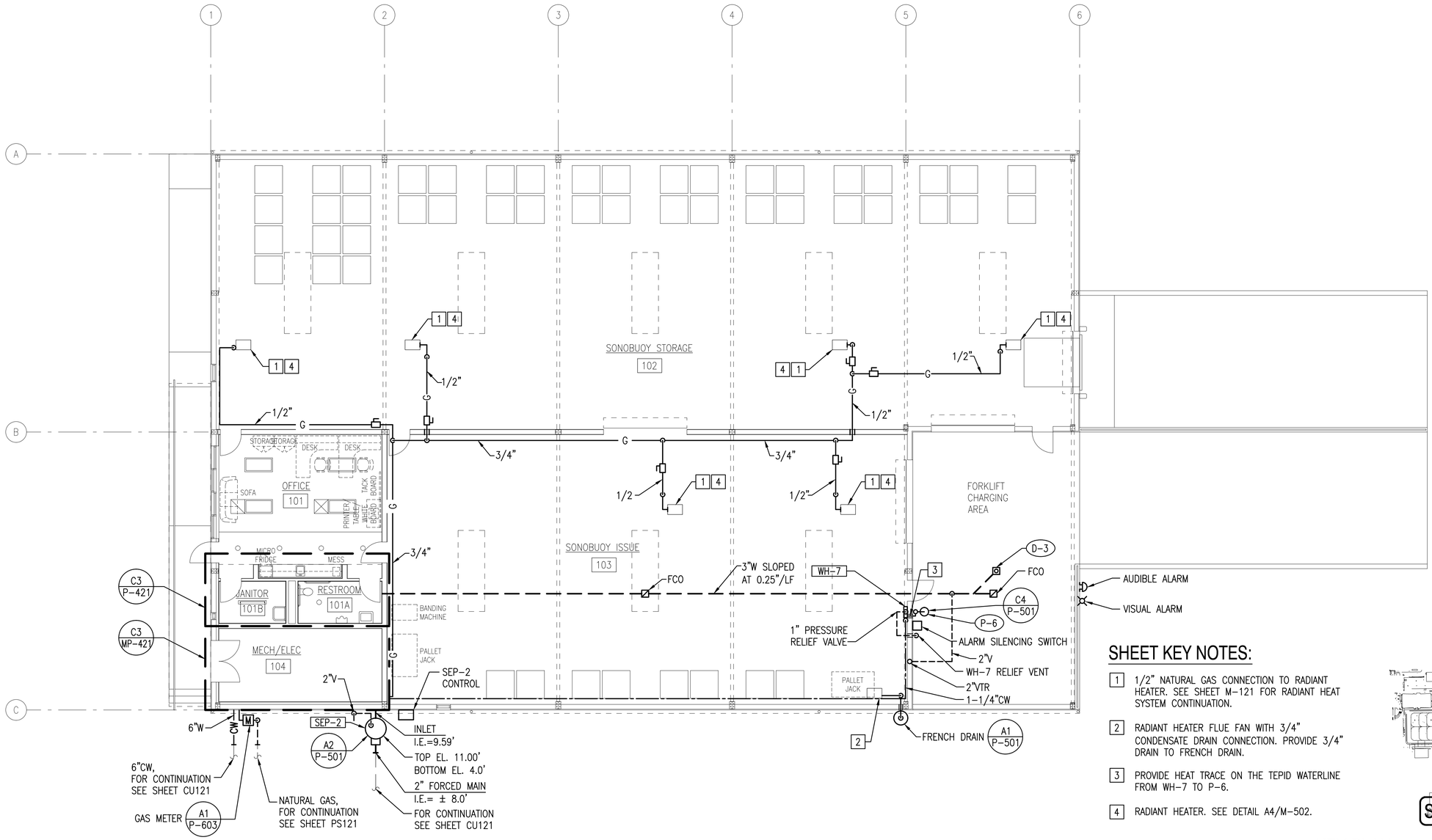

SHEET KEY NOTES:

1. 1/2" NATURAL GAS CONNECTION TO RADIANT HEATER. SEE SHEET M-121 FOR RADIANT HEAT SYSTEM CONTINUATION.
2. RADIANT HEATER FLUE FAN WITH 3/4" CONDENSATE DRAIN CONNECTION. PROVIDE 3/4" DRAIN TO FRENCH DRAIN.
3. PROVIDE HEAT TRACE ON THE TEPID WATERLINE FROM WH-7 TO P-6.
4. RADIANT HEATER. SEE DETAIL A4/M-502.

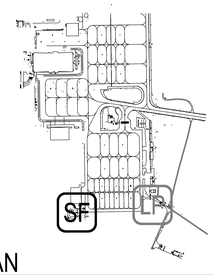

KEY PLAN
SCALE: NTS

LP = GENERAL VICINITY OF LOX PLANT
SF = GENERAL VICINITY OF SONOBUOY ISSUE/STORAGE FACILITY

SONOBUOY ISSUE/STORAGE FACILITY PLUMBING FLOOR PLAN
SCALE: 1/8"=1'-0"

1/8" = 1'-0"
0 4 8 16 24

APPR	DATE	DESCRIPTION	SYM

NAVFAC

LARRY D. SWARTZ — STATE OF WASHINGTON — 27501 — REGISTERED PROFESSIONAL ENGINEER
2-18-15 SEAL

notkin
mechanical engineers
www.notkin.com
telephone: 206.448.1911
facsimile: 206.448.9485
2301 5th Avenue, Suite 401
Seattle, WA 98121

Contact: Larry Swartz, P.E.
notkin#: 214024
A/E INFO

APPROVED
FOR COMMANDER NAVFAC 3/2/15

ACTIVITY
NAS WHIDBEY ISLAND

SATISFACTORY TO	DATE
DES: BCD	DRW: JML
CHK: LDS	
<<PM/DM>>	JOSEPH KISIDAY
BRANCH MANAGER	
CHIEF ENG/ARCH	
<<XXX>>	

DEPARTMENT OF THE NAVY
NAVAL FACILITIES ENGINEERING COMMAND
NAVAL AIR STATION WHIDBEY ISLAND

NAVAL FACILITIES ENGINEERING COMMAND ~ NORTHWEST
AULT FIELD - OAK HARBOR, WA

NAVAL AIR STATION WHIDBEY ISLAND
OAK HARBOR, WA

FY-15 MCON PROJECT P-259 P-8A AIRCRAFT APRON EXPANSION - PART A

SONOBUOY ISSUE/STORAGE FACILITY PLUMBING FLOOR PLAN

SCALE: AS NOTED
EPROJECT NO.:
CONSTR. CONTR. NO.: N44255-15-C-6003
NAVFAC DRAWING NO.: 16030447
SHEET 193 OF 302

P-121

DRAWFORM REVISION: 10 MARCH 2009

L:\PROJECTS\214024 - Navy - 11TO08 - NASWI P252 Hangar\Drawings\Part A\P-121.dwg, 2/12/2015 6:22:39 PM, lr

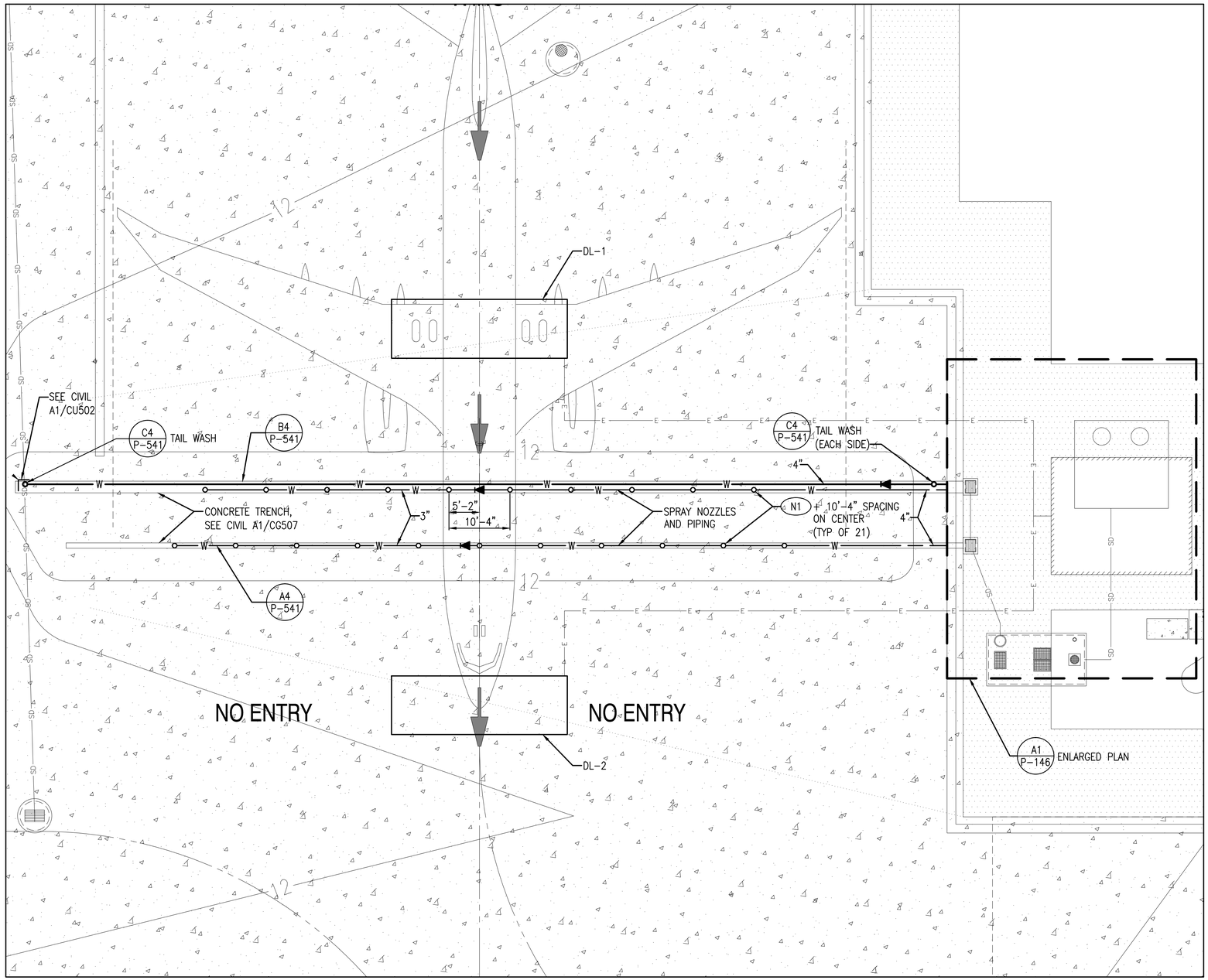

SHEET LEGEND:

—W—	WATER LINE
—FM—	SANITARY SEWER FORCEMAIN
—SD—	STORM DRAIN
	CATCH BASIN
	TEE WITH THRUST BLOCK
	THRUST BLOCK
	CONCENTRIC REDUCER
N1A	SPRAY NOZZLE NUMBER

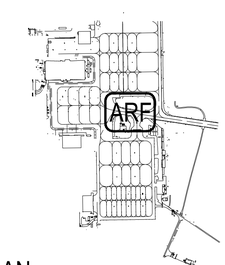

KEY PLAN

SCALE: NTS

ARF = AIRCRAFT RINSE FACILITY PLAN

AIRCRAFT RINSE FACILITY PLAN

SCALE: 1"=10'-0" PS145 A1

1" = 10'-0"

0 10 20 30

SYM	DESCRIPTION	DATE	APPR

NAVFAC

LARRY D. SWARTZ STATE OF WASHINGTON 27501 REGISTERED PROFESSIONAL ENGINEER

2-18-15 SEAL

notkin mechanical engineers
www.notkin.com
telephone: 206.448.1911
facsimile: 206.448.9485
2301 5th Avenue, Suite 401
Seattle, WA 98121

Contact: Larry Swartz, P.E.
notkin#: 214024

A/E INFO

APPROVED

FOR COMMANDER NAVFAC 3/2/15

ACTIVITY

NAS WHIDBEY ISLAND

SATISFACTORY TO DATE

DES: BCD DRW: JML CHK: LDS

<<PM/DM>> JOSEPH KISIDAY

BRANCH MANAGER

CHIEF ENG/ARCH

<<XXX>>

DEPARTMENT OF THE NAVY
NAVAL FACILITIES ENGINEERING COMMAND
NAVAL AIR STATION WHIDBEY ISLAND

NAVAL FACILITIES ENGINEERING COMMAND ~ NORTHWEST
AULT FIELD – OAK HARBOR, WA

NAVAL AIR STATION WHIDBEY ISLAND
OAK HARBOR, WA

FY-15 MCON PROJECT P-259 P-8A AIRCRAFT APRON EXPANSION - PART A

AIRCRAFT RINSE FACILITY PLAN

SCALE: AS NOTED

EPROJECT NO.:

CONSTR. CONTR. NO. N44255-15-C-6003

NAVFAC DRAWING NO. 16030448

SHEET 194 OF 302

P-145

DRAWFORM REVISION: 10 MARCH 2009

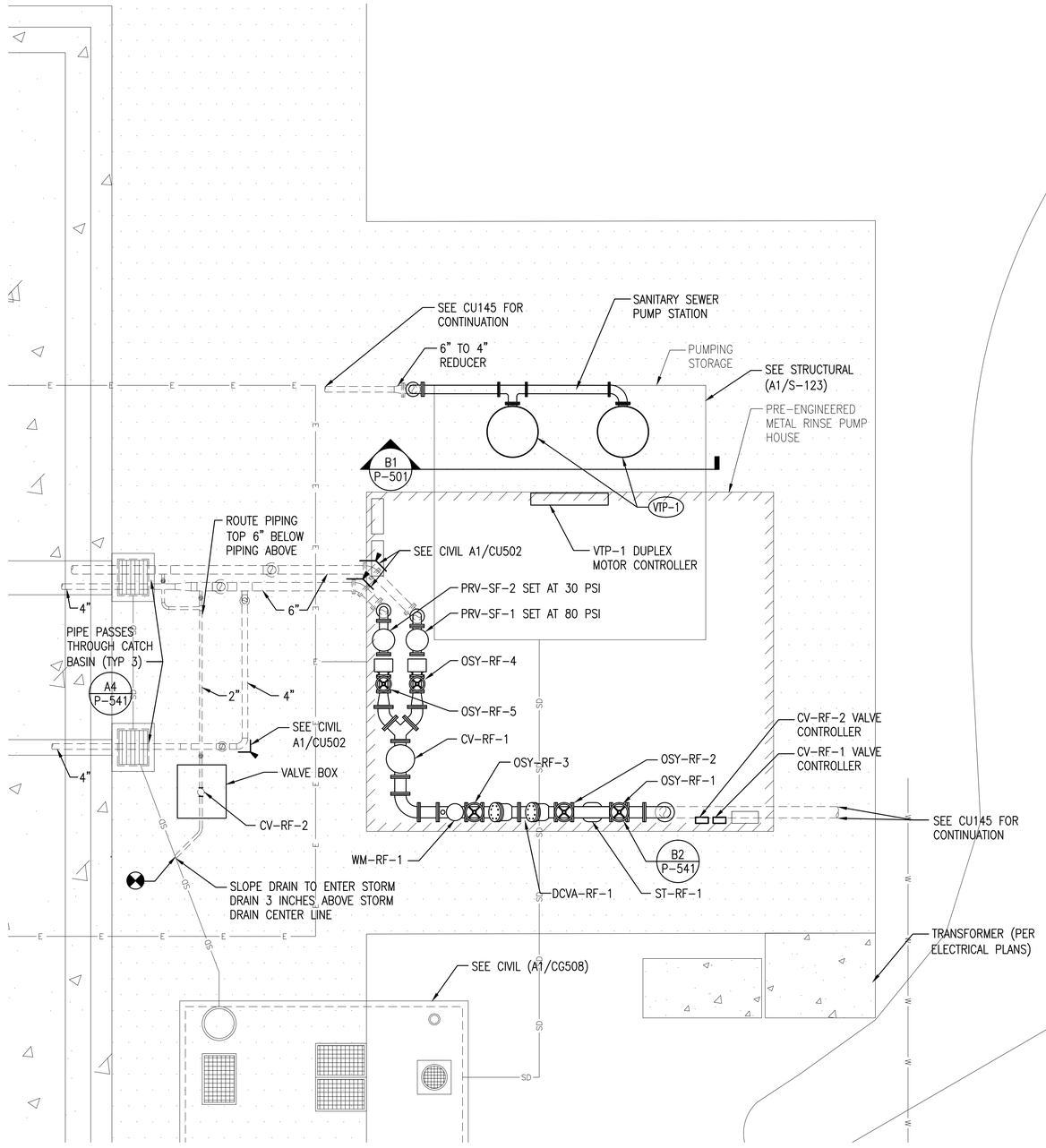

AIRCRAFT RINSE FACILITY PLANS

SCALE: 1/4"=1'-0"

PS145 A1

SHEET LEGEND:

THRUST BLOCK

GENERAL NOTES:

1. SEE P-602 FOR VALVE SCHEDULE.

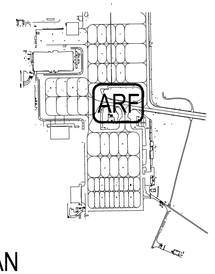

KEY PLAN

SCALE: NTS

1/4" = 1'-0"

0 2 4 8 12

NO.	DESCRIPTION	DATE	APPR

notkin
mechanical engineers
www.notkin.com
telephone: 206.448.1911
facsimile: 206.448.9485
2301 5th Avenue, Suite 401
Seattle, WA 98121

Contact: Larry Swartz, P.E.
notkin#: 214024
A/E INFO

LARRY D. SWARTZ STATE OF WASHINGTON 27501 REGISTERED PROFESSIONAL ENGINEER
2-18-15 SEAL

APPROVED
FOR COMMANDER NAVFAC 3/2/15

ACTIVITY
NAS WHIDBEY ISLAND

SATISFACTORY TO DATE

DES: BCD | DRW: JML | CHK: LDS

<<PM/DM>> JOSEPH KISIDAY

BRANCH MANAGER

CHIEF ENG/ARCH
<<XXX>>

DEPARTMENT OF THE NAVY
NAVAL FACILITIES ENGINEERING COMMAND
NAVAL AIR STATION WHIDBEY ISLAND

NAVAL FACILITIES ENGINEERING COMMAND ~ NORTHWEST
AULT FIELD - OAK HARBOR, WA

NAVAL AIR STATION WHIDBEY ISLAND
OAK HARBOR, WA

FY-15 MCON PROJECT P-259 P-8A AIRCRAFT APRON EXPANSION - PART A

AIRCRAFT RINSE FACILITY FLOOR PLANS

SCALE: AS NOTED

EPROJECT NO.:

CONSTR CONTR NO.
N44255-15-C-6003

NAVFAC DRAWING NO.
16030449

SHEET 195 OF 302

P-146

DRAWFORM REVISION: 10 MARCH 2009

L:\PROJECTS\214024 - Navy - 11OOO8 - NASWI P252 Hangar\Drawings\Part A\P-146.dwg, 2/12/2015 6:23:01 PM, lr

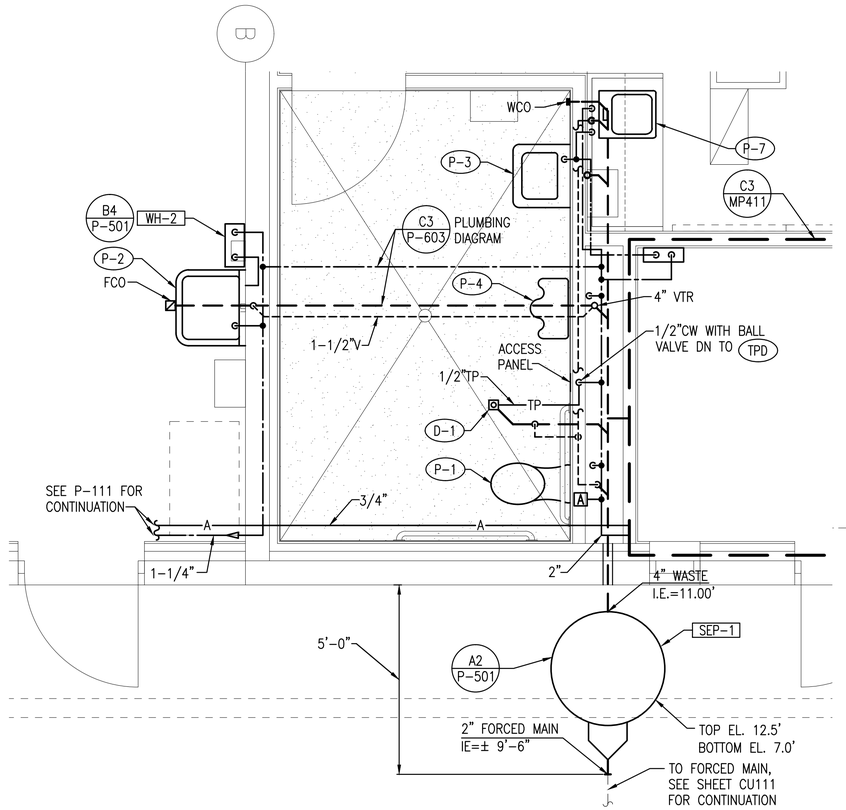

LOX PLANT ENLARGED PLUMBING PLAN

SCALE: 1/2"=1'-0"

P-111 B3

1/2" = 1'-0"

0 2 4 6

APPR	DATE	DESCRIPTION	SYM

NAVFAC

LARRY D. SWARTZ
STATE OF WASHINGTON
27501
REGISTERED
PROFESSIONAL ENGINEER
2-18-15
SEAL

notkin
mechanical engineers
www.notkin.com
telephone: 206.448.1911
facsimile: 206.448.9485
2301 5th Avenue, Suite 401
Seattle, WA 98121

Contact: Larry Swartz, P.E.
notkin#: 214024
A/E INFO

APPROVED
FOR COMMANDER NAVFAC 3/2/15

ACTIVITY
NAS WHIDBEY ISLAND

SATISFACTORY TO DATE

DES: BCD | DRW: JML | CHK: LDS

<<PM/DM>> JOSEPH KISIDAY

BRANCH MANAGER

CHIEF ENG/ARCH

<<XXX>>

DEPARTMENT OF THE NAVY
NAVAL FACILITIES ENGINEERING COMMAND
NAVAL AIR STATION WHIDBEY ISLAND

NAVAL FACILITIES ENGINEERING COMMAND ~ NORTHWEST
AULT FIELD ~ OAK HARBOR, WA

NAVAL AIR STATION WHIDBEY ISLAND
OAK HARBOR, WA

FY-15 MCON PROJECT P-259 P-8A AIRCRAFT APRON EXPANSION - PART A

LOX PLANT ENLARGED PLUMBING PLAN

SCALE: AS NOTED

EPROJECT NO.:

CONSTR. CONTR. NO.
N44255-15-C-6003

NAVFAC DRAWING NO.
16030450

SHEET 196 OF 302

P-411

DRAWFORM REVISION: 10 MARCH 2009

L:\PROJECTS\214024 - Navy - 11OO08 - NASWI P252 HangarDrawings\Part A\P-411.dwg, 2/13/2015 12:50:41 PM, pnb

SHEET NOTES:

1. SLOPE ALL WASTE PIPING AT 0.25"/LF.
2. MOUNT WH-5 & WH-6 4'-0" ABOVE FINISHED FLOOR.

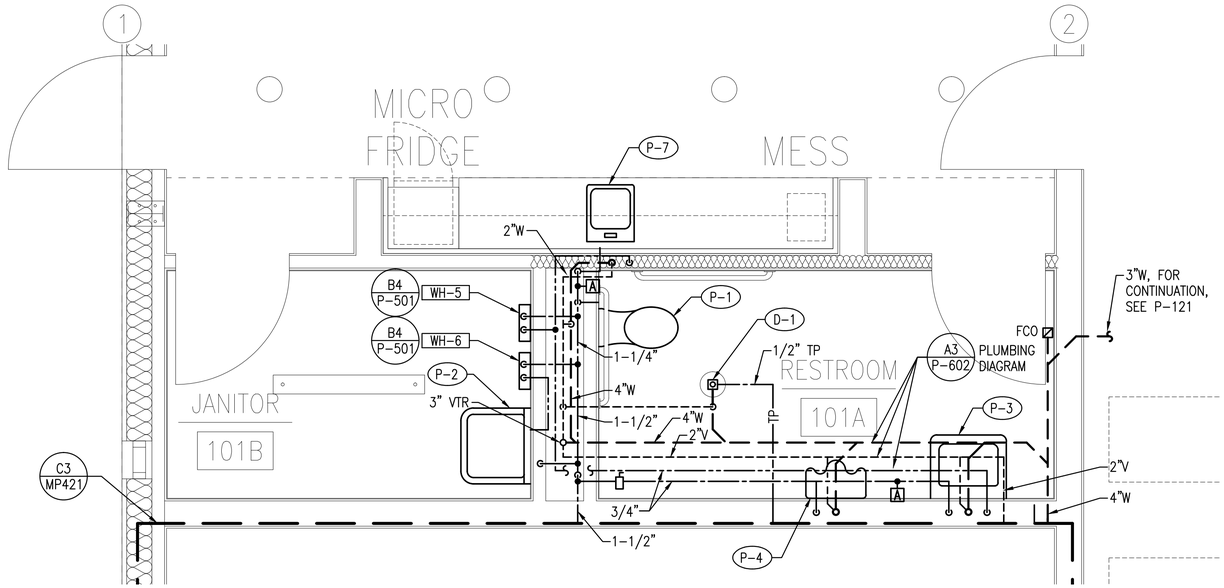

SONOBUOY ISSUE/STORAGE FACILITY ENLARGED PLUMBING PLAN

SCALE: 1/2"=1'-0"

M-121, P-121, MP421 C3

1/2" = 1'-0"

0 2 4 6

APPR	DATE	DESCRIPTION	SYM

NAVFAC

LARRY D. SWARTZ — STATE OF WASHINGTON — 27501 — REGISTERED PROFESSIONAL ENGINEER

2-18-15 SEAL

notkin
mechanical engineers
www.notkin.com
telephone: 206.448.1911
facsimile: 206.448.9485
2301 5th Avenue, Suite 401
Seattle, WA 98121

Contact: Larry Swartz, P.E.
notkin#: 214024
A/E INFO

APPROVED

FOR COMMANDER NAVFAC 3/2/15

ACTIVITY

NAS WHIDBEY ISLAND

SATISFACTORY TO DATE

DES: BCD | DRW: JML | CHK: LDS

<<PM/DM>> JOSEPH KISIDAY

BRANCH MANAGER

CHIEF ENG/ARCH

<<XXX>>

DEPARTMENT OF THE NAVY
NAVAL FACILITIES ENGINEERING COMMAND
NAVAL AIR STATION WHIDBEY ISLAND

NAVAL FACILITIES ENGINEERING COMMAND – NORTHWEST
AULT FIELD – OAK HARBOR, WA

NAVAL AIR STATION WHIDBEY ISLAND
OAK HARBOR, WA

FY-15 MCON PROJECT P-259 P-8A AIRCRAFT APRON EXPANSION - PART A

SONOBUOY ISSUE/STORAGE FACILITY ENLARGED PLUMBING PLAN

SCALE: AS NOTED

EPROJECT NO.:

CONSTR. CONTR. NO.
N44255-15-C-6003

NAVFAC DRAWING NO.
16030451

SHEET 197 OF 302

P-421

DRAWFORM REVISION: 10 MARCH 2009

L:\PROJECTS\214024 - Navy - 11DO08 - NAS\W P252 Hangar\Drawings\Part A\P-421.dwg, 2/12/2015 6:23:07 PM, lr

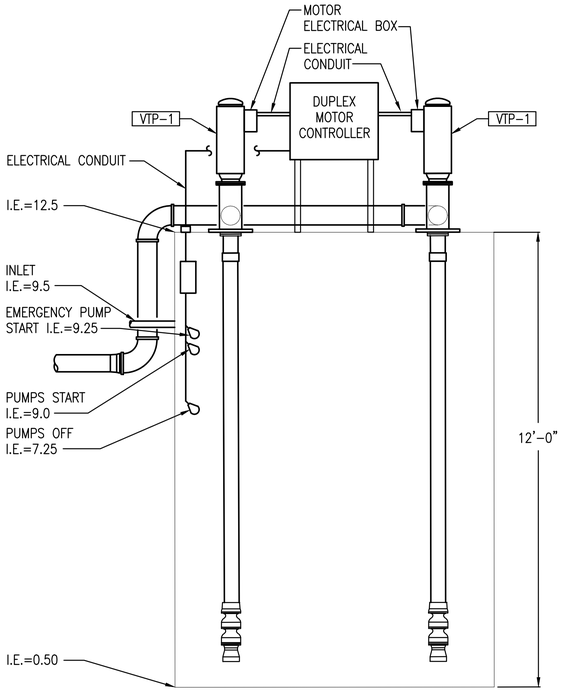

SECTION
SCALE: 1/2"=1'-0" P-146, M-841 B1

1/2" = 1'-0"
0 2 4 6

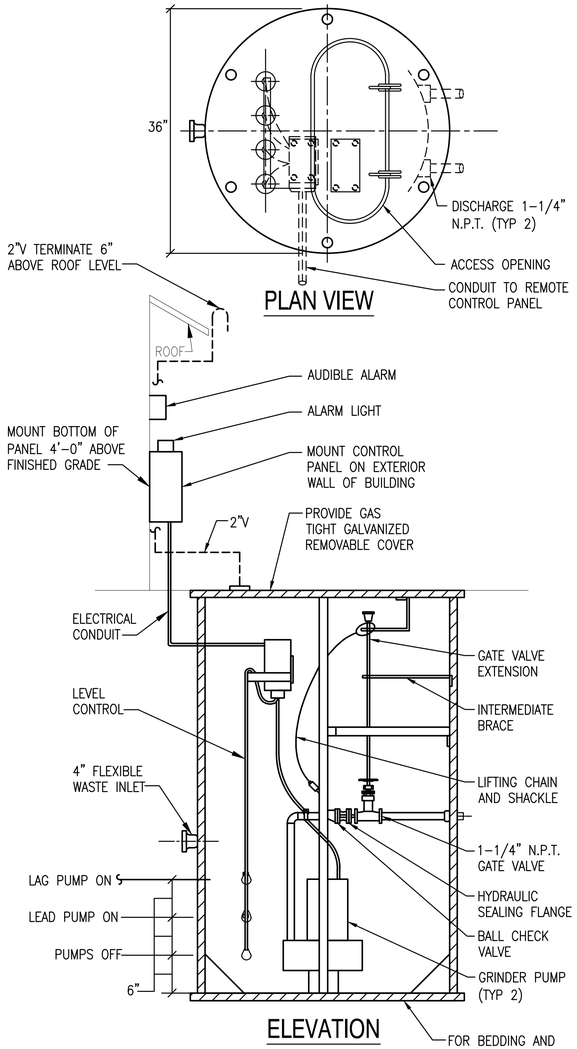

PLAN VIEW

ELEVATION

SEWAGE EJECTOR PUMP (SEP-1, SEP-2) CONTROL SEQUENCE

1. PUMPING STORAGE CONTROL SEQUENCE: DISCHARGE PUMP/PUMPING STORAGE CONTROL PANEL WILL OPERATE DUPLEX GRINDER PUMP TO MAINTAIN WATER LEVEL IN THE PUMPING STORAGE. PUMPS WILL OPERATE IN LEAD/STANBY ARRANGEMENT. IF THE LEAD PUMP FAILS TO OPERATE, THE CONTROL PANEL WILL SOUND AUDIBLE AND VISUAL ALARM, START THE STANDBY PUMP AND SHUT OFF THE LEAD PUMP. PUMPS SHALL ALTERNATE BETWEEN LEAD AND STANDBY AFTER EACH PUMPING CYCLE.

2. SEP-1 FLOAT ELEVATIONS:
   A. PUMPS OFF AT ELEVATION 7.5
   B. LEAD PUMP ON AT ELEVATION 8
   C. LAG PUMP ON AT ELEVATION 8.5

3. SEP-2 FLOAT ELEVATIONS:
   A. PUMPS OFF AT ELEVATION 4.5
   B. LEAD PUMP ON AT ELEVATION 5
   C. LAG PUMP ON AT ELEVATION 5.5

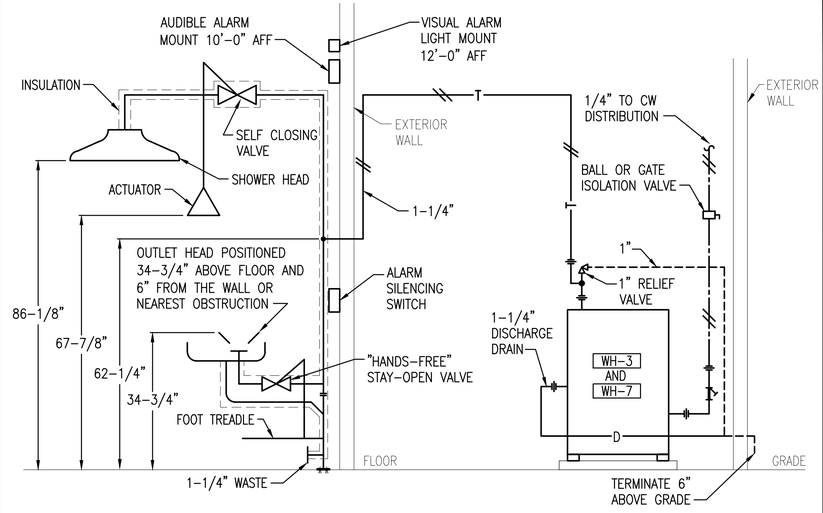

EMERGENCY SHOWER/EYEWASH DETAIL
SCALE: NONE E-121, P-111, P-121 C4

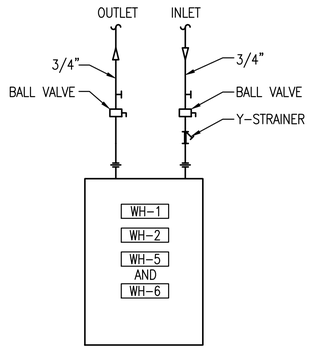

INSTANTANEOUS WATER HEATER DETAIL
SCALE: NONE MP-411, P-411, P-421 B4

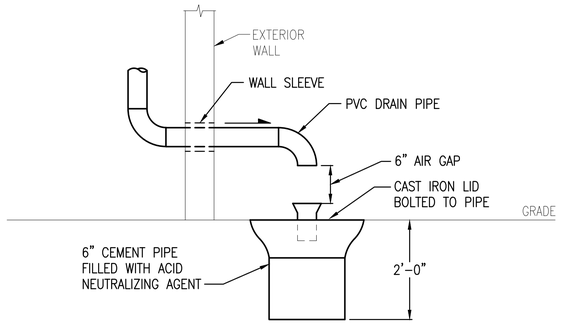

FRENCH DRAIN DETAIL
SCALE: NONE P-121 A1

SEWAGE EJECTOR PUMP DETAIL
SCALE: NONE P-411, P-121 A2

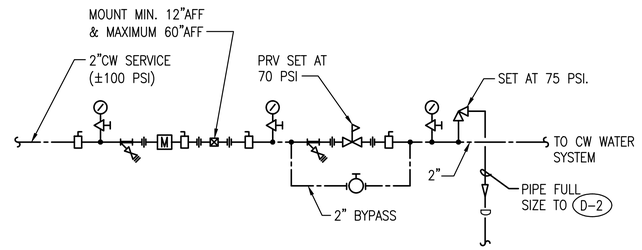

DOUBLE CHECK VALVE ASSEMBLY AND PRV DETAIL
SCALE: NONE MP411, MP421 A4 15210-22

APPR	DATE	DESCRIPTION	SYM

NAVFAC

LARRY D. SWARTZ — STATE OF WASHINGTON — 27501 — REGISTERED PROFESSIONAL ENGINEER
2-18-15 SEAL

notkin
mechanical engineers
www.notkin.com
telephone: 206.448.1911
facsimile: 206.448.9485
2301 5th Avenue, Suite 401
Seattle, WA 98121

Contact: Larry Swartz, P.E.
notkin#: 214024 A/E INFO

APPROVED
FOR COMMANDER NAVFAC 3/2/15

ACTIVITY
NAS WHIDBEY ISLAND

SATISFACTORY TO DATE

DES: BCD	DRW: JML	CHK: LDS

<<PM/DM>> JOSEPH KISIDAY
BRANCH MANAGER
CHIEF ENG/ARCH
<<XXX>>

DEPARTMENT OF THE NAVY
NAVAL FACILITIES ENGINEERING COMMAND ~ NORTHWEST
NAVAL AIR STATION WHIDBEY ISLAND

NAVAL FACILITIES ENGINEERING COMMAND ~ NORTHWEST
AULT FIELD ~ OAK HARBOR, WA

NAVAL AIR STATION WHIDBEY ISLAND OAK HARBOR, WA

FY-15 MCON PROJECT P-259 P-8A AIRCRAFT
APRON EXPANSION - PART A

PLUMBING DETAILS / SECTION

SCALE: AS NOTED
EPROJECT NO.:
CONSTR. CONTR. NO.
N44255-15-C-6003
NAVFAC DRAWING NO.
16030452
SHEET 198 OF 302

P-501

DRAWFORM REVISION: 10 MARCH 2009

L:\PROJECTS\214024 - Navy - 11DO08 - NASWI P252 Hangar\Drawings\Part A\P-501.dwg, 2/12/2015 6:23:09 PM, lr

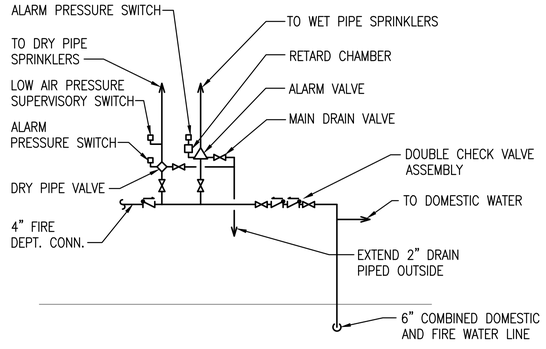

WET PIPE/DRY PIPE FIRE SPRINKLER RISERS DETAIL

SCALE: NONE

MP421 A4

APPR	DATE	DESCRIPTION	SYM

NAVFAC

FREDERICK H. DUHRING — STATE OF WASHINGTON — 22671 — REGISTERED PROFESSIONAL ENGINEER

2-18-15 SEAL

Fred Duhring, P.E.
2845 - 13th Ave W
Seattle, WA 98119-2019
(206) 284-7179

CONTACT:
Frederick Duhring, P.E.
NOTKIN #: 214081
A/E INFO

APPROVED
FOR COMMANDER NAVFAC 3/2/15

ACTIVITY
NAS WHIDBEY ISLAND

SATISFACTORY TO DATE

DES: BCD | DRW: JML | CHK: LDS

<<PM/DM>> JOSEPH KISIDAY

BRANCH MANAGER

CHIEF ENG/ARCH

<<XXX>>

DEPARTMENT OF THE NAVY
NAVAL FACILITIES ENGINEERING COMMAND
NAVAL AIR STATION WHIDBEY ISLAND

NAVAL FACILITIES ENGINEERING COMMAND ~ NORTHWEST
AULT FIELD ~ OAK HARBOR, WA

NAVAL AIR STATION WHIDBEY ISLAND
OAK HARBOR, WA

FY-15 MCON PROJECT P-259 P-8A AIRCRAFT APRON EXPANSION - PART A

FIRE RISER DETAILS

SCALE: AS NOTED
EPROJECT NO.:
CONSTR. CONTR. NO.
N44255-15-C-6003
NAVFAC DRAWING NO.
16030453
SHEET 199 OF 301

P-502

DRAWFORM REVISION: 10 MARCH 2009

L:\PROJECTS\214024 - Navy - 11TO08 - NAS\W P252 Hangar\Drawings\Part A\P-502.dwg, 2/12/2015 6:23:12 PM, fr

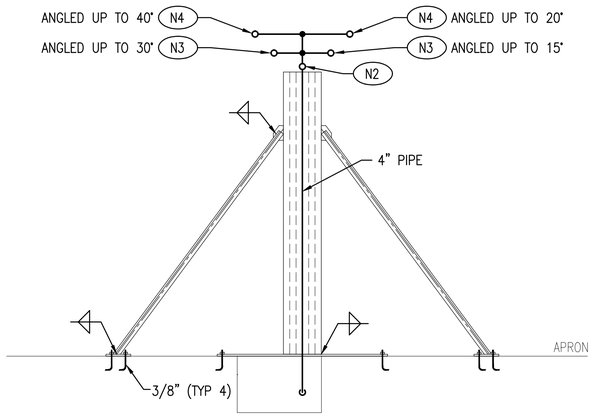

SECTION
SCALE: 1/4"=1'-0"
P-541 C2

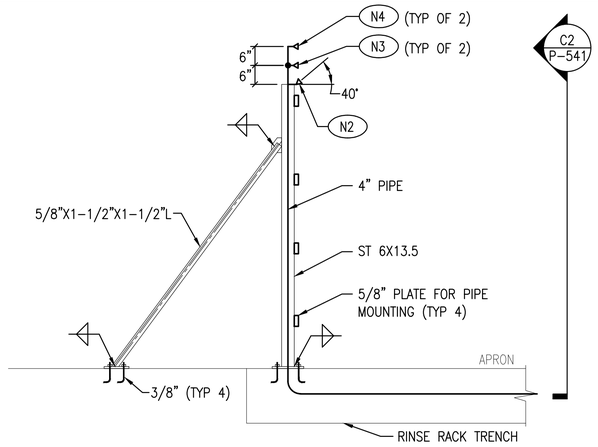

TAIL WASH PIPING DETAIL
SCALE: 1/4"=1'-0"
P-145 C4

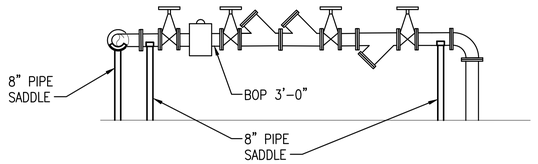

RINSE PIPING SUPPORT DETAIL
SCALE: NONE
P-146 B2

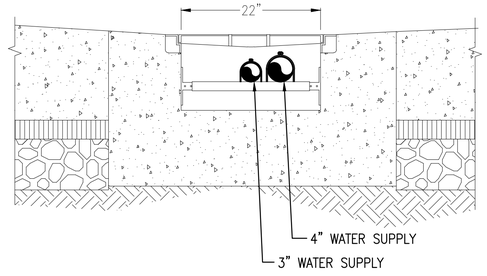

RINSE RACK TRENCH PIPING SECTION
SCALE: NONE
PS145 B4

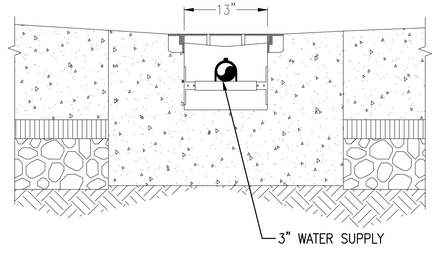

RINSE RACK TRENCH PIPING SECTION
SCALE: NONE
PS145 A4

APPR	DATE	DESCRIPTION	SYM

NAVFAC

LARRY D. SWARTZ — STATE OF WASHINGTON — 27501 — REGISTERED PROFESSIONAL ENGINEER
2-18-15
SEAL

notkin
mechanical engineers
www.notkin.com
telephone: 206.448.1911
facsimile: 206.448.9485
2301 5th Avenue, Suite 401
Seattle, WA 98121

Contact: Larry Swartz, P.E.
notkin#: 214024
A/E INFO

APPROVED
FOR COMMANDER NAVFAC 3/2/15

ACTIVITY
NAS WHIDBEY ISLAND

SATISFACTORY TO DATE

DES: BCD	DRW: JML	CHK: LDS

<<PM/DM>> JOSEPH KISIDAY
BRANCH MANAGER
CHIEF ENG/ARCH
<<XXX>>

DEPARTMENT OF THE NAVY
NAVAL FACILITIES ENGINEERING COMMAND
NAVAL AIR STATION WHIDBEY ISLAND

NAVAL FACILITIES ENGINEERING COMMAND ~ NORTHWEST
AULT FIELD - OAK HARBOR, WA

NAVAL AIR STATION WHIDBEY ISLAND
OAK HARBOR, WA

FY-15 MCON PROJECT P-259 P-8A AIRCRAFT APRON EXPANSION - PART A

PLUMBING DETAILS

SCALE: AS NOTED
EPROJECT NO.:
CONSTR. CONTR. NO.
N44255-15-C-6003
NAVFAC DRAWING NO.
16030454
SHEET 200 OF 302

P-541

DRAWFORM REVISION: 10 MARCH 2009

L:\PROJECTS\214024 - Navy - 11D008 - NASWI P232 Hangar\Drawings\Part A\P-541.dwg, 2/12/2015 6:23:14 PM, v

PLUMBING FIXTURE SCHEDULE (CONT'D)

MARK	ITEM	MFR/ MODEL	COLD WATER (IN)	HOT WATER (IN)	WASTE (IN)	VENT (IN)
P-7	SINK (BREAK ROOM)	COUNTERTOP, STAINLESS STEEL, SINGLE COMPARTMENT, SELF-RIMMING, 2-HOLE PUNCH, SOUND DEADENING, 15"x15"x7-11/16" DEEP I.D.	-	-	-	-
	FAUCET	DECK MOUNTED MIXING FAUCET, SINGLE HOLE MOUNTING, SINGLE LEVER CONTROL, 1.5 GPM, 6" SWING SPOUT, GOOSENECK, 7" TO 8" CLEARANCE BELOW SPOUT, VANDAL PROOF AERATOR, CHROME PLATED, CERAMIC DISC CARTRIDGE.	1/2	1/2	1-1/2	1-1/2
	DRAIN	STAINLESS STEEL, REMOVABLE STEEL CRUMB CUP STRAINER WITH 4" TAILPIECE, RUBBER STOPPER.				
	ACCESS-ORIES	DRINKING WATER FAUCET, HIGH-ARCH GOOSENECK SWING SPOUT, LEVER HANDLE, INCLUDES WATER FILTRATION SYSTEM WITH TWO HOSE ASSEMBLIES, ONE FILTER MOUNTING BRACKET.	3/8	-	-	-
HB-1	HOSE BIBB	INTERIOR, POLISHED CHROME PLATED, 3/4" FEMALE THREADED INLET AND 3/4" HOSE CONNECTION, INTEGRAL VACUUM BREAKER, WHEEL HANDLE, VANDAL RESISTANT.	3/4	-	-	-
D-1	FLOOR DRAIN	DUCO CAST IRON BODY, FLASHING COLLAR ROUND NICKEL BRONZE ADJUSTABLE STRAINER HEAD W/ VANDAL RESISTANT SCREWS, 1/2" TRAP PRIMER CONNECTION, SQUARE HOLE GRATE	-	-	2	1-1/2
D-2	FLOOR DRAIN	DUCO CAST IRON BODY, FLASHING COLLAR, 9" DIAMETER, ROUND TOP ANTI-SPLASH RIM, RIM TO BE FLUSH WITH FINISHED FLOOR, NICKEL BRONZE STRAINER, TRAP PRIMER CONNECTION.	-	-	4	2
D-3	AREA DRAIN	DUCO CAST IRON BODY, FLASHING COLLAR, 12" DIAMETER, ROUND TOP, MODERATE TRAFFIC AREAS, ADJUSTABLE TOP AND BAR GRATE WITH SEDIMENT BUCKET, GRATE TO BE FLUSH WITH FINISHED FLOOR.	-	-	3	2
TPD	TRAP PRIMER VALVE	PRESSURE DROP ACTIVATED TRAP PRIMER VALVE, DISTRIBUTION UNIT WITH ONE TO FOUR CONNECTION POINTS AS REQUIRED. PROVIDE BALL VALVE FOR SERVICE.	1/2	-	-	-

L:\PROJECTS\214024 - NAVY - 11D008 - NASWI P252 HANGAR\SCHEDULES\SCHEDULES PART A\PLUMBING\[PLUMBING FIXTURE SCHEDULE A.XLS]FIX B

PLUMBING FIXTURE SCHEDULE

MARK TYPE	ITEM	DESCRIPTION	COLD WATER (IN)	HOT WATER (IN)	WASTE (IN)	VENT (IN)
P-1	WATER CLOSET	WALL HUNG, ELONGATED BOWL, VITREOUS CHINA, LOW CONSUMPTION, SIPHON JET ACTION, 1-1/2" TOP SPUD, 1.1 GPF, ADA COMPLIANT.	1	-	4	2
	FLUSH VALVE	SENSOR-OPERATED, ELECTRONIC, MANUAL OVERIRIDE, HARDWIRED AC TRANSFORMER, 100--250 VAC, OUTPUT VOLTAGE 6 VDC.				
	SEAT	HEAVY DUTY SOLID PLASTIC, OPEN FRONT LESS COVER, EXTERNAL CHECK HINGES, STAINLESS STEEL POSTS, WHITE.				
P-2	SERVICE SINK	ENAMELED CAST IRON, WALL MOUNT W/ 3" P-TRAP STANDARD, SINGLE BOWL W/ RIM GUARD, CHROME STRAINER, DRILLED BACK, 8" CENTERS, WALL HANGER.	1/2	1/2	3	1-1/2
	FAUCET	BACK MOUNTED, INTEGRAL VACUUM BREAKER, BRASS CONSTRUCTION, 4" WRIST BLADE HANDLES, HOSE OUTLET, BUCKET HOOK, SERVICE STOPS.				
P-3	LAVATORY	WALL HUNG WITH BACK SPLASH, VITREOUS CHINA, 20-1/2"x18-1/4", 4" CENTERS, WITH OVERFLOW, CONCEALED ARMS.	1/2	1/2	1 1/2	1-1/4
	FAUCET	PUSH-BUTTON METERING FAUCET WITH EXTENDED SPOUT, 0.50 GPM, CHROME PLATED, ADA COMPLIANT, 4" DECK PLATE, THERMOSTATIC MIXING VALVE.				
	DRAIN	CHROME TAILPIECE, NON-REMOVABLE GRID STRAINER, CHROME PLATED.				
	LAVATORY SHIELD	LAV SHIELD, WHITE VINYL, HIGH IMPACT, STAIN-RESISTANT, RIGID PVC, VANDAL RESISTANT, TOTAL ENCLOSURE.				
P-4	URINAL	WALL HUNG, VITREOUS CHINA, ULTRA HIGH EFFICIENCY, 3/4" TOP SPUD, 0.125 GPF, ADA COMPLIANT.	3/4	-	2	1-1/2
	FLUSH VALVE	CHROME PLATED, SCREWDRIVER STOP, INTEGRAL VACUUM BREAKER, LOW CONSUMPTION, 0.125 GPF.				
P-5	HOSE REEL	HEAVY DUTY HOSE REEL, 1/2" COMPRESSED AIR CONNECTION, SPRING DRIVEN, 100 FOOT LONG HOSE, STEEL BASE, POWDER COATED, FACTORY MOUNTING PLATE, STANDARD N.P.T. THREADS.	-	-	-	-
P-6	EMERGENCY SHOWER/ EYEWASH	BARRIER-FREE COMBINATION DRENCH SHOWER/EYEWASH, OVERHEAD SHOWER ACTIVATED BY PULL DOWN TRIANGLE HANDLE. EYEWASH OPERATED BY PUSH PAD AND FOOT PEDAL ACTIVATION, BOWL CONSTRUCTED OF IMPACT-RESISTANT YELLOW PLASTIC, DUST COVER, FLOW CONTROL., UNIVERSAL SIGNAGE, BASE MTD. WITH 20 GPM SHOWER FLOW LIMITER	-	1-1/4	-	-

APPR | DATE | DESCRIPTION | SYM

NAVFAC

LARRY D. SWARTZ — STATE OF WASHINGTON — 27501 — REGISTERED PROFESSIONAL ENGINEER
2-18-15 SEAL

notkin
mechanical engineers
www.notkin.com
telephone: 206.448.1911
facsimile: 206.448.9485
2301 5th Avenue, Suite 401
Seattle, WA 98121

Contact: Larry Swartz, P.E.
notkin#: 214024 A/E INFO

APPROVED
FOR COMMANDER NAVFAC 3/2/15

ACTIVITY
NAS WHIDBEY ISLAND

SATISFACTORY TO DATE

DES: BCD | DRW: JML | CHK: LDS

<<PM/DM>> JOSEPH KISIDAY

BRANCH MANAGER

CHIEF ENG/ARCH

<<XXX>>

DEPARTMENT OF THE NAVY
NAVAL FACILITIES ENGINEERING COMMAND
NAVAL AIR STATION WHIDBEY ISLAND

NAVAL FACILITIES ENGINEERING COMMAND ~ NORTHWEST
AULT FIELD - OAK HARBOR, WA

NAVAL AIR STATION WHIDBEY ISLAND
OAK HARBOR, WA

FY-15 MCON PROJECT P-259 P-8A AIRCRAFT APRON EXPANSION - PART A

PLUMBING SCHEDULES

SCALE: AS NOTED
EPROJECT NO.:
CONSTR. CONTR. NO.: N44255-15-C-6003
NAVFAC DRAWING NO.: 16030455
SHEET 201 OF 302

P-601

DRAWFORM REVISION: 10 MARCH 2009

L:\PROJECTS\214024 - Navy - 11D008 - NASWI P252 Hangar\Drawings\Part A\P-601.dwg, 2/12/2015 6:23:16 PM, v

NOZZLE SCHEDULE

NOZZLE NUMBER	SPRAY PATTERN	SPRAY ANGLE	SPRAY DISTIBUTION	FREE PASSAGE DIAMETER (IN)	DESIGN CAPACITY (GPM)	DESIGN PRESSURE (PSI)	SPRAY MEDIA	PIPE SIZE (IN)	THREADED END TYPE	REMARKS
N1	SOLID STREAM	110	UNIFORM	0.375	21.0	40	WATER	3/4 NPT	FEMALE	316 STAINLESS STEEL
N2	SOLID STREAM	--	UNIFORM	0.334	28.0	80	WATER	1/2 NPT	FEMALE	316 STAINLESS STEEL W/SS ADJUSTABLE BALL FITTING. INSTALL ANGLED AS INDICTATED.
N3	SOLID STREAM	--	UNIFORM	0.437	50.0	80	WATER	3/4 NPT	FEMALE	316 STAINLESS STEEL W/SS ADJUSTABLE BALL FITTING. INSTALL ANGLED AS INDICTATED.
N4	FULL CONE	--	UNIFORM	*	99.0	80	WATER	1-1/4 NPT	FEMALE	316 STAINLESS STEEL W/SS ADJUSTABLE BALL FITTING. INSTALL ANGLED AT 40 DEGREES ABOVE HORIZONTAL.

* MULTIPLE ORIFICE

INSTANTANEOUS WATER HEATER SCHEDULE

MARK	UNIT SERVES	LOCATION	CAPACITY (GPM)	EWT (°F)	LWT (°F)	ELECTRICAL KW	V	PH	AMPS	CW IN (IN)	HW OUT (IN)	NOTES
WH-1	LAVATORY SINK / KITCHEN SINK	LOX PLANT-MECH 106	1.5	50	120	15	208	1	72	3/4	3/4	
WH-2	SERVICE SINK	LOX PLANT-MAINTENANCE 103	3	50	120	36	480	3	44	3/4	3/4	
WH-3	EMERGENCY SHOWER / EYEWASH STATION	LOX PLANT-MAINTENANCE 103	20	50	85	108	480	3	132	1-1/4	1-1/4	[1][2]
WH-4	NOT USED	--	-	-	-	-	-	-	-	-	-	
WH-5	SERVICE SINK	SONOBUOY ISSUE/STORAGE FACILITY-JANITOR 101B	3	50	120	36	480	3	44	3/4	3/4	
WH-6	LAVATORY SINK / KITCHEN SINK	SONOBUOY ISSUE/STORAGE FACILITY-JANITOR 101B	1.5	50	120	18	208	1	87	3/4	3/4	
WH-7	EMERGENCY SHOWER / EYEWASH STATION	SONOBUOY ISSUE/STORAGE FACILITY-SONOBUOY\ISSUE 103	20	50	85	108	480	3	132	1-1/4	1-1/4	[1][2]

NOTES:
[1] TANKLESS HEATER FOR EMERGENCY SHOWER/EYEWASH APPLICATIONS.
[2] TEPID WATER OUT (85°F)

L:\PROJECTS\214024 - NAVY - 11D008 - NASWI P252 HANGAR\SCHEDULES\SCHEDULES PART A\PLUMBING\[WATER HEATER SCHEDULE A.XLS]ELECTRIC WATER HEATER SCHEDULE

AIR COMPRESSOR SCHEDULE

MARK	LOCATION	QTY	SCFM	PSI	MOTOR HP	MOTOR VOLT	MOTOR PH	MOTOR RPM	RECEIVER CAPACITY (GALLONS)	UNIT WxLxH (IN)	NOTES	EQUIP WEIGHT (LBS)
AC-1	LOX FACILITY	1	17.5	175	5	208	1	750	70	-	[1],[2],[3]	400

NOTES:
[1] VERTICAL TANK WITH COMPRESSOR MOUNTED ON TOP.
[2] PROVIDE AUTOMATIC DRAIN VALVE.
[3] PROVIDE CONDENSATE DRAIN OIL/WATER SEPARATOR. SEPARATOR SHALL REDUCE OIL IN CONDENSATE TO A MAXIMUM OF10 PPM

L:\PROJECTS\214024 - NAVY - 11D008 - NASWI P252 HANGAR\SCHEDULES\SCHEDULES PART A\PLUMBING\[AIR COMPRESSOR SCHEDULE A.XLS]AIR COMPRESSOR SCHEDULE

AIRCRAFT RINSE FACILITY VALVE SCHEDULE

MARK	SERVES	LOCATION	PIPE SIZE (IN)	VALVE SIZE (IN)	NOM-MAX WORKING PRESS (PSI)	TYPE	WT (LBS)	REMARKS & NOTES
ST-RF-1	DCVA INLET	Pump House	8	8	150-150	WYE STRAINER	320	
CV-RF-1	WATER INLET	Pump House	8	8	150-150	ELECTRONIC CONTROL VALVE	500	[1]
CV-RF-2	DRAIN	VALVE BOX	2	2	150-150	ELECTRONIC CONTROL VALVE	35	[2]
PRV-SF-1	UPPER WASH NOZZLES	RINSE RACK	6	6	150-150	PRESSURE REDUCING VALVE	428	[3]
PRV-SF-2	LOWER WASH NOZZLES	RINSE RACK	6	6	150-150	PRESSURE REDUCING VALVE	428	[4]
OSY-SF-1	WATER INLET	Pump House	8	8	150-150	OS&Y VALVE	250	[7]
OSY-SF-2	DCVA INLET	Pump House	8	8	150-150	OS&Y VALVE	250	[7]
OSY-SF-3	DCVA OUTLET	Pump House	8	8	150-150	OS&Y VALVE	250	[7]
OSY-SF-4	PVR-SF-1 INLET	Pump House	6	6	150-150	OS&Y VALVE	150	[7]
OSY-SF-5	PVR-SF-2 INLET	Pump House	6	6	150-150	OS&Y VALVE	150	[7]
DCVA-RF-1	WATER INLET	Pump House	8	8	150-150	DOUBLE CHECK VALVE ASSEMBLY	2608	[5]
WM-RF-1	WATER INLET	Pump House	8	8	150-150	WATER METER	123	[6]

NOTES:
[1] PROVIDE WITH PROGRAMMABLE VALVE CONTROLLER WHICH RESPONDS TO A 4 TO 20 ma SIGNAL FROM THE DDC SYSTEM. CONTROLLER TO PROVIDE INDEPENDENTLY ADJUSTABLE OPENING AND CLOSING RATES AND SYSTEM FLOW RATE. INITIAL FLOW RATE - 100 GPM
[2] PROVIDE WITH PROGRAMMABLE VALVE CONTROLLER WHICH RESPONDS TO A 4 TO 20 ma SIGNAL FROM THE DDC SYSTEM. CONTROLLER TO PROVIDE INDEPENDENTLY. ADJUSTABLE OPENING AND CLOSING RATES
[3] INITIAL SETPOINT - 80 PSIG
[4] INITIAL SETPOINT - 30 PSIG
[5] PROVIDE 8" DCVA VALVE WITH 8" INTEGRAL BYPASS CONNECTIONS
[6] AMI COMPLIANT METER COMPATABILE WITH THE EXISTING NAVAL AIR STATION WHIDBEY ISLAND AMI SYSTEM
[7] FORGED STEEL API 602 BOLTED BONNET OS&Y GATE VALVE, CLASS 300 (ASME B16.34), CARBON STEEL BODY MATERIAL (ASTM A 105N), FLANGED ENDS, FLEXIBLE WEDGE/DISC SURFACE - A217-CA15, SEAT SURFACE - STELLITE 6, STEM - STAINLESS STEEL Gr. 410

L:\PROJECTS\214024 - NAVY - 11D008 - NASWI P252 HANGAR\SCHEDULES\SCHEDULES PART A\PLUMBING\[214024 VALVES-RINSE FACILITY.XLS]VALVE-STM SCHED

PUMP SCHEDULE

MARK	SYSTEM	LOCATION	CAPACITY (GPM)	TDH (FT)	MOTOR HP	MOTOR VOLT	MOTOR PH	MOTOR RPM	TYPE	NOTES	EQUIP WEIGHT
VTP-1	SANITARY SEWER SYSTEM	AIRCRAFT RINSE FACILITY	500	152	25	460	3	1770	VERTICAL TURBINE PUMP	[1] [2] [3]	1,000
SEP-1	SANITARY SEWER SYSTEM	LOX PLANT	20	80	2	460	3	3450	SUMP PUMP	[1] [3]	80
SEP-2	SANITARY SEWER SYSTEM	SONOBOUY ISSUE/STORAGE FACILITY	20	80	2	460	3	3450	SUMP PUMP	[1] [3]	80

NOTES: [1] TWO PUMPS SET UP IN DUPLEX ARRANGEMENT
[2] NPSHr 6.25 FEET MAXIMUM, 7.25 NPSHa
[3] PROVIDE WITH DUPLEX CONTROLLER FLOAT SWITCH ASSEMBLY, PUMP ALTERNATOR, AND AUDIBLE AND VISUAL ALARM

L:\PROJECTS\214024 - NAVY - 11D008 - NASWI P252 HANGAR\SCHEDULES\SCHEDULES PART A\PLUMBING\[PUMP SCHEDULE A.XLS]15100-01-PUMP SCHEDULE

APPR | DATE | DESCRIPTION | SYM

NAVFAC

LARRY D. SWARTZ — STATE OF WASHINGTON — 27501 — REGISTERED PROFESSIONAL ENGINEER
2-18-15 SEAL

notkin
mechanical engineers
www.notkin.com
telephone: 206.448.1911
facsimile: 206.448.9485
2301 5th Avenue, Suite 401
Seattle, WA 98121

Contact: Larry Swartz, P.E.
notkin#: 214024
A/E INFO

APPROVED
FOR COMMANDER NAVFAC 3/2/15

ACTIVITY
NAS WHIDBEY ISLAND

SATISFACTORY TO DATE

DES: BCD | DRW: JML | CHK: LDS

<<PM/DM>> JOSEPH KISIDAY
BRANCH MANAGER
CHIEF ENG/ARCH
<<XXX>>

DEPARTMENT OF THE NAVY
NAVAL FACILITIES ENGINEERING COMMAND - NORTHWEST
NAVAL AIR STATION WHIDBEY ISLAND
AULT FIELD - OAK HARBOR, WA

NAVAL AIR STATION WHIDBEY ISLAND
OAK HARBOR, WA
FY-15 MCON PROJECT P-259 P-8A AIRCRAFT
APRON EXPANSION - PART A

PLUMBING SCHEDULES

SCALE: AS NOTED
EPROJECT NO.:
CONSTR. CONTR. NO.
N44255-15-C-6003
NAVFAC DRAWING NO.
16030456
SHEET 202 OF 302

P-602

DRAWFORM REVISION: 10 MARCH 2009

L:\PROJECTS\214024 - Navy - 11D008 - NASWI P252 Hangar\Drawings\Part A\P-602.dwg, 2/13/2015 12:54:48 PM, pnb

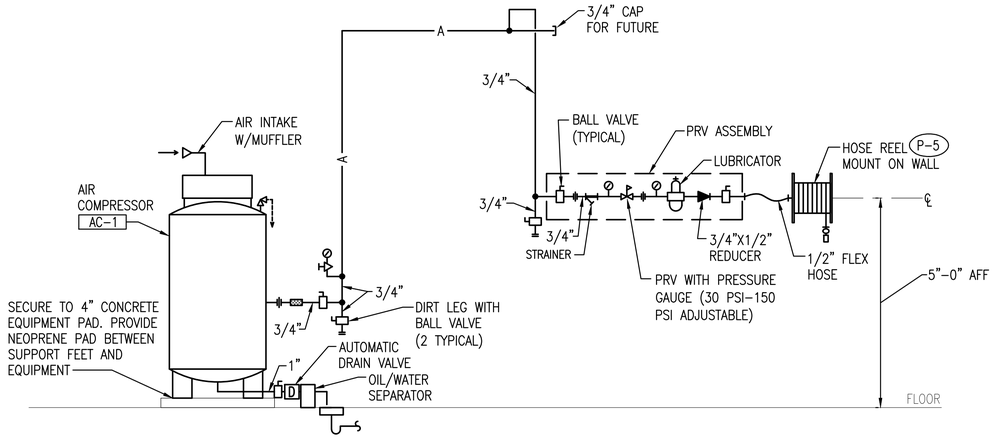

COMPRESSOR AIR PIPING DIAGRAM

SCALE: NONE — P-111, MP411 — C1

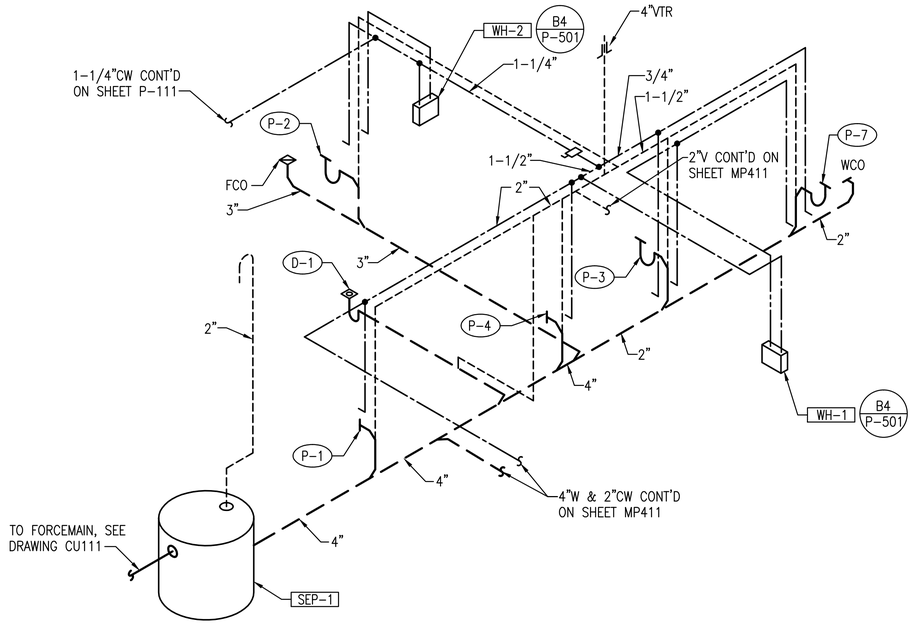

LOX PLANT PLUMBING DIAGRAM

SCALE: NONE — P-411 — C3

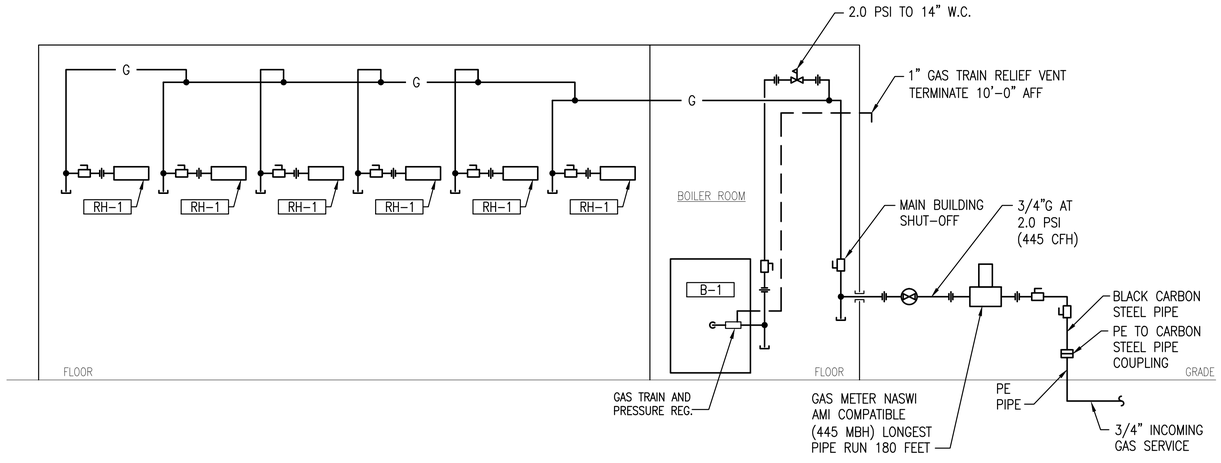

NATURAL GAS PIPING DIAGRAM

SCALE: NONE — P-121, PS121, MP421 — A1

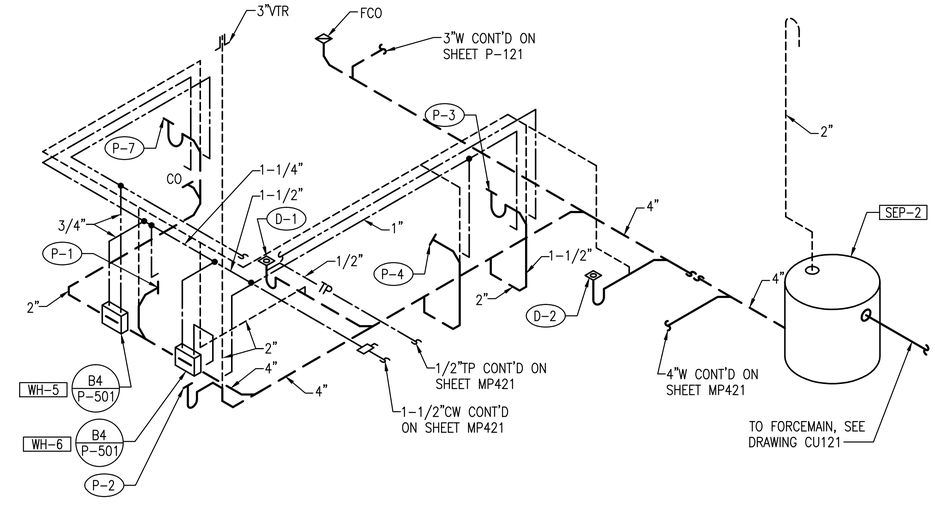

SONOBOUY STORAGE FACILITY PLUMBING DIAGRAM

SCALE: NONE — P-421, MP421 — A3

APPR	DATE	DESCRIPTION	SYM

NAVFAC

LARRY D. SWARTZ — STATE OF WASHINGTON — 27501 — REGISTERED PROFESSIONAL ENGINEER
2-18-15 SEAL

notkin
mechanical engineers
www.notkin.com
telephone: 206.448.1911
facsimile: 206.448.9485
2301 5th Avenue, Suite 401
Seattle, WA 98121

Contact: Larry Swartz, P.E.
notkin#: 214024
A/E INFO

APPROVED
FOR COMMANDER NAVFAC 3/2/15

ACTIVITY
NAS WHIDBEY ISLAND

SATISFACTORY TO	DATE
DES: BCD	DRW: JML CHK: LDS
<<PM/DM>>	JOSEPH KISIDAY
BRANCH MANAGER	
CHIEF ENG/ARCH	
<<XXX>>	

DEPARTMENT OF THE NAVY
NAVAL FACILITIES ENGINEERING COMMAND
NAVAL AIR STATION WHIDBEY ISLAND

NAVAL FACILITIES ENGINEERING COMMAND – NORTHWEST
AULT FIELD – OAK HARBOR, WA

NAVAL AIR STATION WHIDBEY ISLAND
OAK HARBOR, WA

FY-15 MCON PROJECT P-259 P-8A AIRCRAFT APRON EXPANSION - PART A

PLUMBING DIAGRAMS

SCALE:	AS NOTED
EPROJECT NO.:	
CONSTR. CONTR. NO.	N44255-15-C-6003
NAVFAC DRAWING NO.	16030457
SHEET	203 OF 302

P-603

DRAWFORM REVISION: 10 MARCH 2009

L:\PROJECTS\214024 - Navy - 11TO08 - NASWI P252 Hangar\Drawings\Part A\P-603.dwg, 2/12/2015 6:23:21 PM, lr

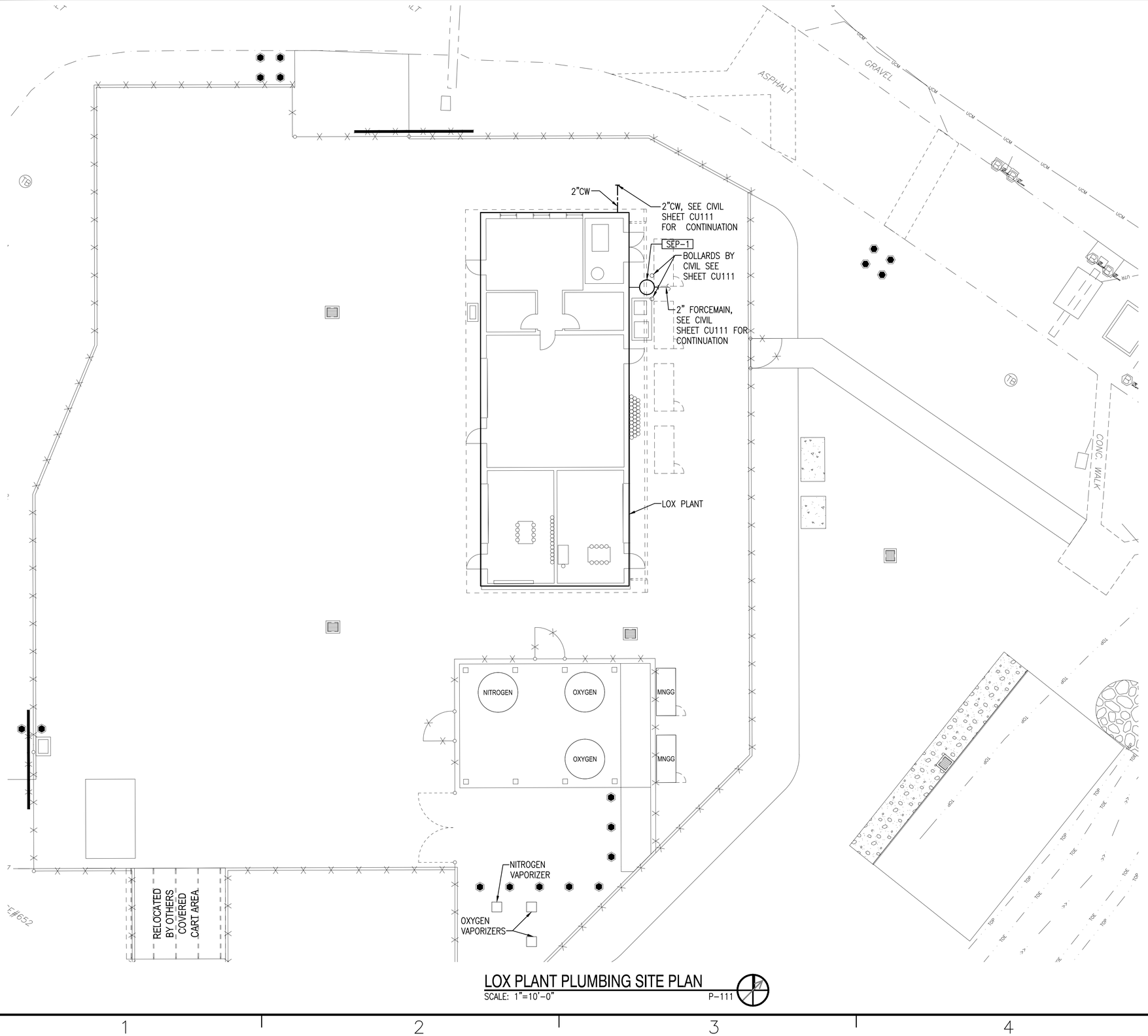

LOX PLANT PLUMBING SITE PLAN

SCALE: 1"=10'-0" P-111

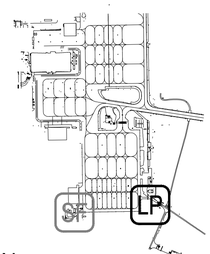

KEY PLAN

SCALE: NTS

LP = GENERAL VICINITY OF LOX PLANT
SF = GENERAL VICINITY OF SONOBUOY ISSUE/STORAGE FACILITY

1" = 10'-0"

0 10 20 30

APPR | DATE | DESCRIPTION | SYM

NAVFAC

LARRY D. SWARTZ — STATE OF WASHINGTON — 27501 — REGISTERED PROFESSIONAL ENGINEER
2-18-15 SEAL

notkin
mechanical engineers
www.notkin.com
telephone: 206.448.1911
facsimile: 206.448.9485
2301 5th Avenue, Suite 401
Seattle, WA 98121

Contact: Larry Swartz, P.E.
notkin#: 214024
A/E INFO

APPROVED
FOR COMMANDER NAVFAC 3/2/15

ACTIVITY
NAS WHIDBEY ISLAND

SATISFACTORY TO DATE

DES: BCD	DRW: JML	CHK: LDS

<<PM/DM>> JOSEPH KISIDAY
BRANCH MANAGER
CHIEF ENG/ARCH
<<XXX>>

DEPARTMENT OF THE NAVY
NAVAL FACILITIES ENGINEERING COMMAND ~ NORTHWEST
NAVAL AIR STATION WHIDBEY ISLAND

NAVAL FACILITIES ENGINEERING COMMAND
AULT FIELD - OAK HARBOR, WA

NAVAL AIR STATION WHIDBEY ISLAND
OAK HARBOR, WA

FY-15 MCON PROJECT P-259 P-8A AIRCRAFT APRON EXPANSION - PART A

LOX PLANT PLUMBING SITE PLAN

SCALE: AS NOTED
EPROJECT NO.:
CONSTR. CONTR. NO.: N44255-15-C-6003
NAVFAC DRAWING NO.: 16030458
SHEET 204 OF 302

PS111

DRAWFORM REVISION: 10 MARCH 2009

L:\PROJECTS\214024 - Navy - 11DD08 - NASWI P232 Hangar\Drawings\Part A\PS111.dwg, 2/12/2015 6:23:34 PM, r

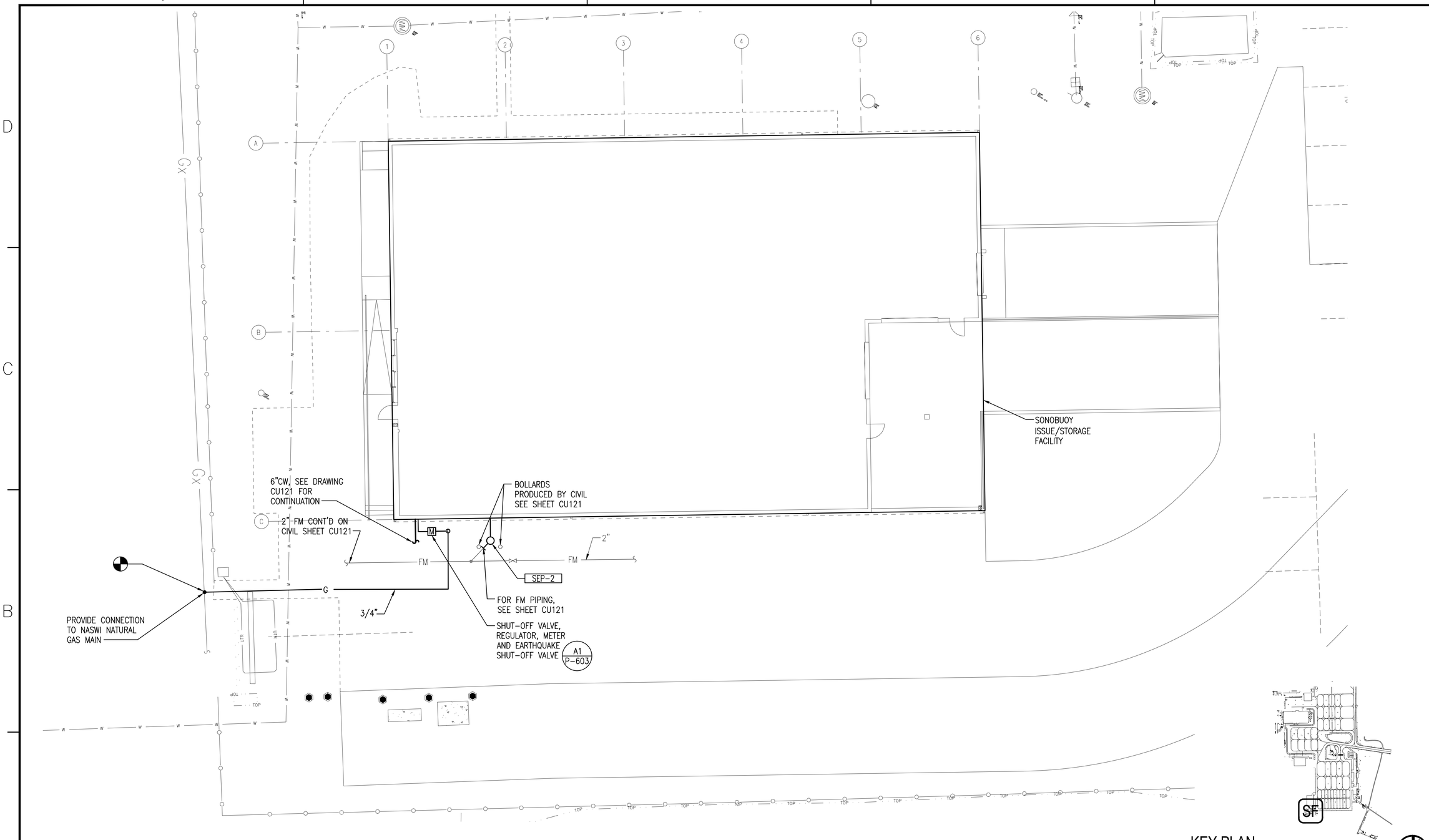

KEY PLAN

SCALE: NTS

SF = GENERAL VICINITY OF SONOBUOY ISSUE/STORAGE FACILITY

SONOBUOY ISSUE/ STORAGE FACILITY PLUMBING SITE PLAN

SCALE: 1"=10'-0"

P-121

1" = 10'-0"

0 10 20 30

SYM	DESCRIPTION	DATE	APPR

NAVFAC

LARRY D. SWARTZ
STATE OF WASHINGTON
27501
REGISTERED PROFESSIONAL ENGINEER
2-18-15
SEAL

notkin
mechanical engineers
www.notkin.com
telephone: 206.448.1911
facsimile: 206.448.9485
2301 5th Avenue, Suite 401
Seattle, WA 98121

Contact: Larry Swartz, P.E.
notkin#: 214024
A/E INFO

APPROVED
FOR COMMANDER NAVFAC 3/2/15

ACTIVITY
NAS WHIDBEY ISLAND

SATISFACTORY TO DATE

DES: BCD DRW: JML CHK: LDS

<<PM/DM>> JOSEPH KISIDAY

BRANCH MANAGER

CHIEF ENG/ARCH

<<XX>>

DEPARTMENT OF THE NAVY
NAVAL FACILITIES ENGINEERING COMMAND
NAVAL FACILITIES ENGINEERING COMMAND ~ NORTHWEST
NAVAL AIR STATION WHIDBEY ISLAND
AULT FIELD - OAK HARBOR, WA

NAVAL AIR STATION WHIDBEY ISLAND
OAK HARBOR, WA

FY-15 MCON PROJECT P-259 P-8A AIRCRAFT APRON EXPANSION - PART A

SONOBUOY ISSUE/STORAGE FACILITY PLUMBING SITE PLAN

SCALE: AS NOTED

EPROJECT NO.:

CONSTR. CONTR. NO.
N44255-15-C-6003

NAVFAC DRAWING NO.
16030459

SHEET 205 OF 302

PS121

DRAWFORM REVISION: 10 MARCH 2009

L:\PROJECTS\214024 - Navy - 11DD08 - NASWI P252 Hangar\Drawings\Part A\PS121.dwg, 2/12/2015 6:19:51 PM, ir

MECHANICAL LEGEND

GENERAL

SYMBOL	ABBREVIATION	DESCRIPTION
		ITEM TO BE REMOVED
		ITEM TO BE REMOVED
		PIPE UP AND DOWN (SINGLE LINE)
		PIPE DOWN (SINGLE LINE)
		DOUBLE LINE PIPE ELBOW UP
		DOUBLE LINE PIPE ELBOW DOWN
		EXISTING WORK
		NEW WORK
	POC	POINT OF CONNECTION
ø	DIA	DIAMETER OR ROUND
1		DEMOLITION KEY NOTE
1		NEW WORK KEY NOTE
		CONNECTING PIPING

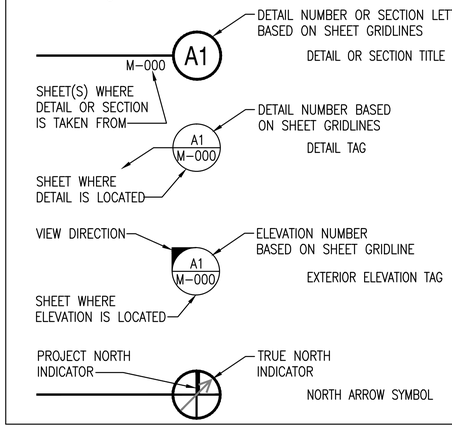

VALVES & FITTINGS

SYMBOL	ABBREVIATION	DESCRIPTION
		CAP
	VTR	VENT THROUGH ROOF
	GLV	GLOBE VALVE
		QUICK DISCONNECT COUPLING WITH SHUT-OFF VALVE
	RV	RELIEF VALVE
		HIGH PRESSURE GAS VALVE

PIPING SYSTEMS

SYMBOL	ABBREVIATION	DESCRIPTION
O2	O2	GASEOUS OXYGEN
N2	N2	GASEOUS NITROGEN
V.V	V.V	VAPOR VENT
LO2	LO2	LIQUID OXYGEN
LN2	LN2	LIQUID NITROGEN
RVV	RVV	RELIEF VALVE VENT
	BOP	BOTTOM OF PIPE

ABBREVIATIONS

&	AND
AFF	ABOVE FINISHED FLOOR
AFG	ABOVE FINISHED GRADE
CGA	COMPRESSED GAS ASSOCIATION
Db	DECIBEL
DN	DOWN
F	FAHRENHEIT
FPM	FEET PER MINUTE
IN	INCH
LBS.	POUNDS
MAX	MAXIMUM
MBH	1000 BRITISH THERMAL UNITS PER HOUR
MECH	MECHANICAL
MNGG	MOBILE NITROGEN GAS GENERATOR
RVTR	RELIEF VENT THROUGH ROOF
SF	SQUARE FEET

DRAWING INDEX

DWG NO	DWG TITLE	NAVFAC DWG NO.	SHEET NO.
D-001	PROCESS PIPING LEGEND	16030460	206
DD111	BUILDING 2621 PROCESS PIPING PLAN – DEMO	16030461	207
DD512	PROCESS PIPING AND EQUIPMENT DEMO DETAILS	16030462	208
D-111	LOX PLANT PROCESS PIPING PLAN	16030463	209
D-112	LOX PLANT PROCESS PIPING PLAN	16030464	210
D-211	LOX PLANT – EXTERIOR ELEVATION	16030465	211
D-512	DETAILS	16030466	212
D-513	DETAILS	16030467	213
D-612	OXYGEN AND NITROGEN DIAGRAMS	16030468	214
DS111	LOX PLANT SITE PLAN	16030472	218

L:\PROJECTS\214024 – NAVY – 11D008 – NASWI P252 HANGAR\SCHEDULES\[DRAWING INDEX P-259 PART A & B.XLSX]PROCCESS PIPING PART A

APPR | DATE | DESCRIPTION | SYM

NAVFAC

LARRY D. SWARTZ — STATE OF WASHINGTON — 27501 — REGISTERED PROFESSIONAL ENGINEER
2-18-15 SEAL

notkin
mechanical engineers
www.notkin.com
telephone: 206.448.1911
facsimile: 206.448.9485
2301 5th Avenue, Suite 401
Seattle, WA 98121

Contact: Larry Swartz, P.E.
notkin#: 214024
A/E INFO

APPROVED
FOR COMMANDER NAVFAC 3/2/15

ACTIVITY
NAS WHIDBEY ISLAND

SATISFACTORY TO DATE

DES: BCD	DRW: JML	CHK: LDS

<<PM/DM>> JOSEPH KISIDAY
BRANCH MANAGER
CHIEF ENG/ARCH
<<XXX>>

DEPARTMENT OF THE NAVY
NAVAL FACILITIES ENGINEERING COMMAND
NAVAL AIR STATION WHIDBEY ISLAND

NAVAL FACILITIES ENGINEERING COMMAND – NORTHWEST
AULT FIELD – OAK HARBOR, WA

NAVAL AIR STATION WHIDBEY ISLAND
OAK HARBOR, WA

FY-15 MCON PROJECT P-259 P-8A AIRCRAFT
APRON EXPANSION - PART A

PROCESS PIPING LEGEND

SCALE: AS NOTED
EPROJECT NO.:
CONSTR. CONTR. NO.
N44255-15-C-6003
NAVFAC DRAWING NO.
16030460
SHEET 206 OF 302

D-001

DRAWFORM REVISION: 10 MARCH 2009

L:\PROJECTS\214024 - Navy - 11D008 - NASWI P252 Hangar\Drawings\Part A\D-001.dwg, 2/12/2015 6:19:39 PM, r

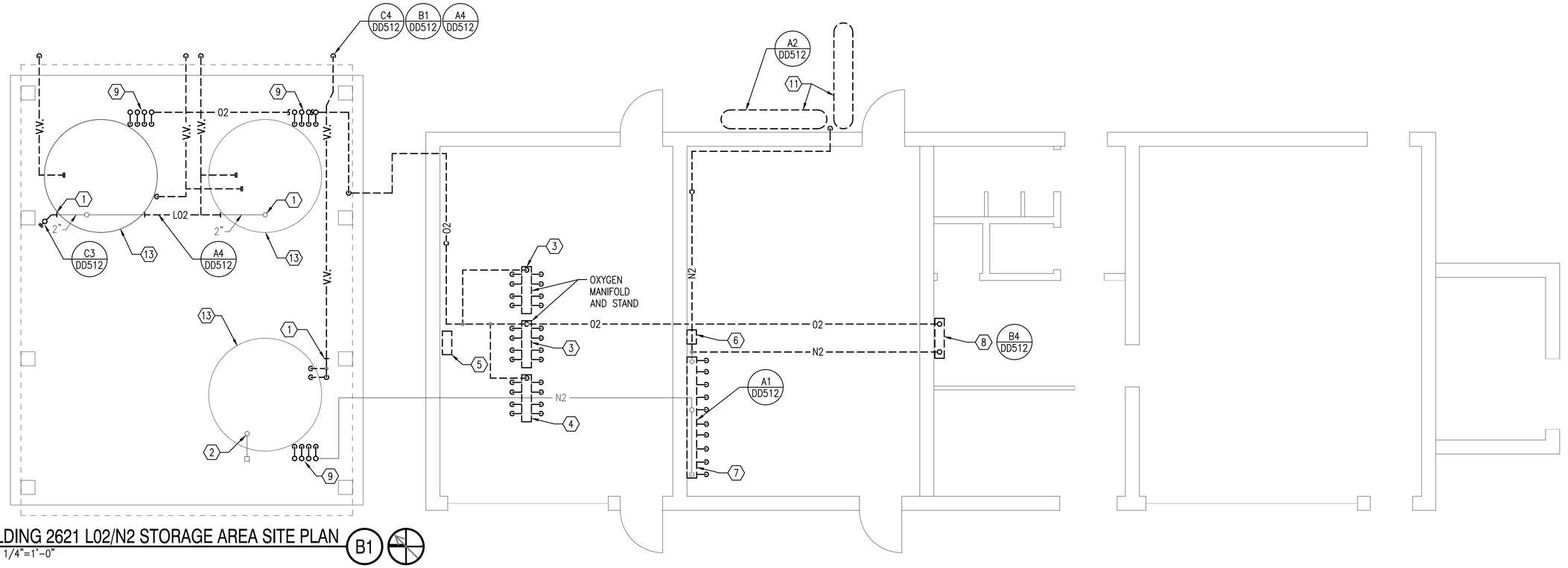

BUILDING 2621 L02/N2 STORAGE AREA SITE PLAN

SCALE: 1/4"=1'-0"

B1

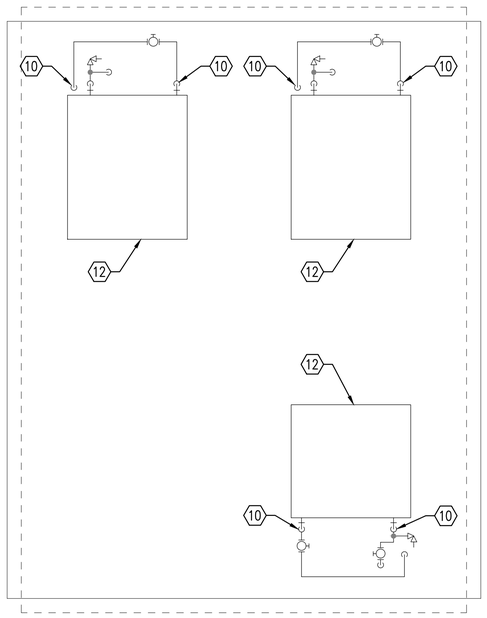

BUILDING 2621 PROCESS PIPING ROOF PLAN - DEMO

SCALE: 1/4"=1'-0"

A1

BUILDING 2621 PROCESS PIPING PLAN - DEMO

SCALE: 1/4"=1'-0"

B2

DEMOLITION SHEET KEY NOTES:

1. CUT AND DEMOLISH PIPING AS INDICATED.
2. PIPING TO REMAIN.
3. TANK STAND AND MANIFOLD TO BE DEMOLISHED.
4. TANK STAND AND MANIFOLD TO BE REMOVED FOR RE-INSTALLATION IN LOX PLANT.
5. OXYGEN PRESSURE METER TO BE REMOVED FOR RE-INSTALLATION IN LOX PLANT.
6. NITROGEN PRESSURE METER TO BE REMOVE FOR RE-INSTALLATION IN LOX PLANT.
7. NITROGEN MANIFOLD TO BE REMOVED FOR RE-INSTALLATION IN LOX PLANT.
8. N2/02 METER TO BE REMOVED FOR RE-INSTALLATION IN LOX PLANT.
9. CUT PIPING 4 INCHES ABOVE VERTICAL INSULATION, SEE DETAIL C1/DD512.
10. CUT PIPING 3 INCHES ABOVE ROOF. SEE DETAIL C2/DD512.
11. NITROGEN FLASKS TO BE REMOVED FOR RE-INSTALLATION AT LOX PLANT.
12. REMOVE VAPORIZER FOR RE-INSTALLATION AT LOX PLANT.
13. REMOVE TANK FOR RE-INSTALLATION AT LOX PLANT.

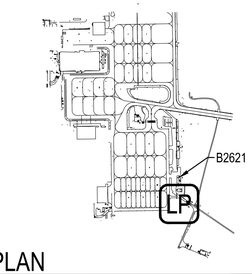

KEY PLAN

SCALE: NTS

LP = GENERAL VICINITY OF LOX PLANT

1/4" = 1'-0"

0 2 4 8 12

NO.	DESCRIPTION	DATE	APPR

NAVFAC

LARRY D. SWARTZ — STATE OF WASHINGTON — 27501 — REGISTERED PROFESSIONAL ENGINEER

2-18-15 SEAL

notkin
mechanical engineers
www.notkin.com
telephone: 206.448.1911
facsimile: 206.448.9485
2301 5th Avenue, Suite 401
Seattle, WA 98121

Contact: Larry Swartz, P.E.
notkin#: 214024
A/E INFO

APPROVED

FOR COMMANDER NAVFAC 3/2/15

ACTIVITY

NAS WHIDBEY ISLAND

SATISFACTORY TO DATE

DES: BCD | DRW: JML | CHK: LDS

<<PM/DM>> JOSEPH KISIDAY

BRANCH MANAGER

CHIEF ENG/ARCH

<<XXX>>

DEPARTMENT OF THE NAVY
NAVAL FACILITIES ENGINEERING COMMAND
NAVAL AIR STATION WHIDBEY ISLAND

NAVAL FACILITIES ENGINEERING COMMAND ~ NORTHWEST
AULT FIELD ~ OAK HARBOR, WA

NAVAL AIR STATION WHIDBEY ISLAND
OAK HARBOR, WA

FY-15 MCON PROJECT P-259 P-8A AIRCRAFT APRON EXPANSION - PART A

BUILDING 2621 PROCESS PIPING PLAN – DEMO

SCALE: AS NOTED

EPROJECT NO.:

CONSTR. CONTR. NO.
N44255-15-C-6003

NAVFAC DRAWING NO.
16030461

SHEET 207 OF 302

DD111

DRAWFORM REVISION: 10 MARCH 2009

L:\PROJECTS\214024 - Navy - 11D008 - NASW\P252 Hangar\Drawings\Part A\DD111.dwg, 2/12/2015 8:20:33 PM, ir

PIPING DEMO AT CRYO TANK DETAIL C1

SCALE: NONE DD111

PIPING DEMO AT CRYO TANK DETAIL C2

SCALE: NONE DD112

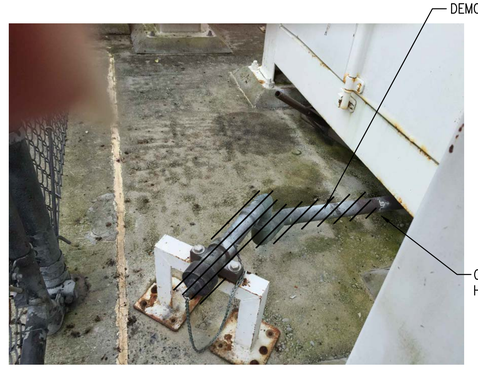

CRYO TANK FILL DETAIL C3

SCALE: NONE DD111

CRYO TANK VENT DEMO DETAIL C4

SCALE: NONE DD111

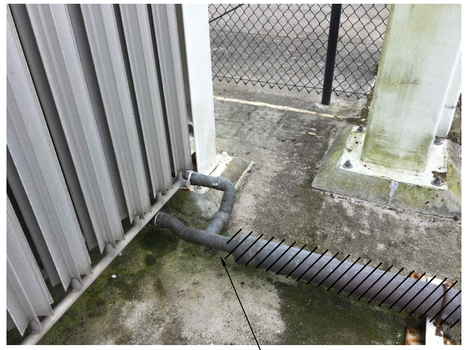

CRYO TANK VENT DEMO DETAIL B1

SCALE: NONE DD111

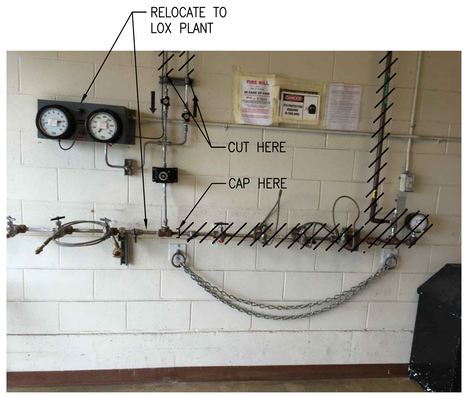

B2621 N2 MANIFOLD DETAIL A1

SCALE: NONE D-612, D-512, DD111

CRYO TANK VENT DEMO DETAIL A4

SCALE: NONE DD111, D-111

APPR	DATE	DESCRIPTION	SYM

NAVFAC

LARRY D. SWARTZ — STATE OF WASHINGTON — 27501 — REGISTERED PROFESSIONAL ENGINEER — 2-18-15 — SEAL

notkin
mechanical engineers
www.notkin.com
telephone: 206.448.1911
facsimile: 206.448.9485
2301 5th Avenue, Suite 401
Seattle, WA 98121

Contact: Larry Swartz, P.E.
notkin#: 214024
A/E INFO

APPROVED
FOR COMMANDER NAVFAC 3/2/15

ACTIVITY
NAS WHIDBEY ISLAND

SATISFACTORY TO DATE

DES: BCD	DRW: JML	CHK: LDS

<<PM/DM>> JOSEPH KISIDAY
BRANCH MANAGER
CHIEF ENG/ARCH
<<XXX>>

DEPARTMENT OF THE NAVY
NAVAL FACILITIES ENGINEERING COMMAND
NAVAL AIR STATION WHIDBEY ISLAND

NAVAL FACILITIES ENGINEERING COMMAND – NORTHWEST
AULT FIELD – OAK HARBOR, WA

NAVAL AIR STATION WHIDBEY ISLAND
OAK HARBOR, WA

FY-15 MCON PROJECT P-259 P-8A AIRCRAFT APRON EXPANSION - PART A

PROCESS PIPING AND EQUIPMENT DEMO DETAILS

SCALE: AS NOTED
EPROJECT NO.:
CONSTR. CONTR. NO.
N44255-15-C-6003
NAVFAC DRAWING NO.
16030462
SHEET 208 OF 302

DD512

DRAWFORM REVISION: 10 MARCH 2009

L:\PROJECTS\214024 - Navy - 11DD08 - NASWI P232 Hangar\Drawings\Part A\DD512.dwg, 2/12/2015 6:20:39 PM, ir

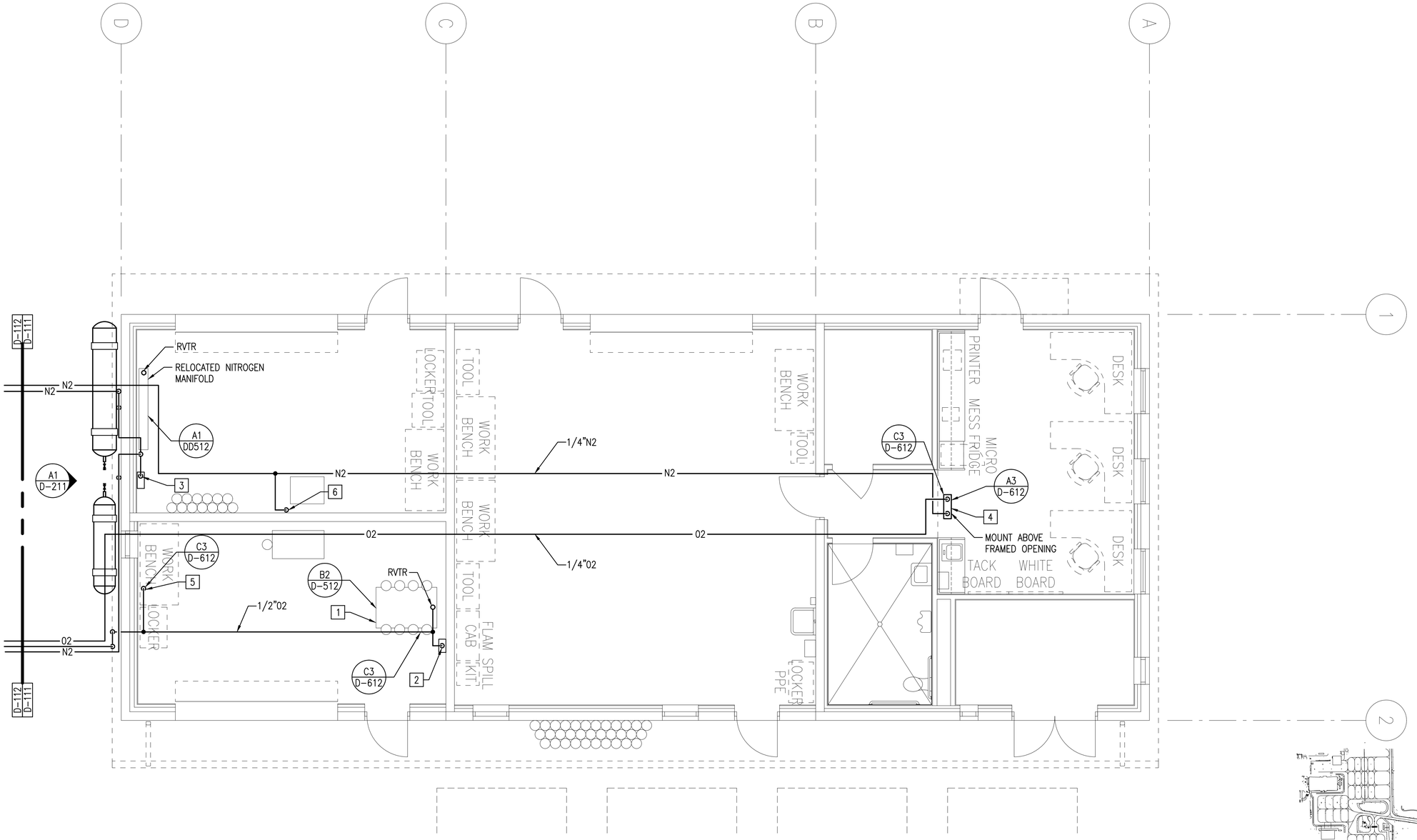

LOX PLANT PROCESS PIPING PLAN

SCALE: 1/4"=1'-0"

SHEET KEY NOTES:

1. RELOCATED 02 MANIFOLD AND SUPPORT STAND.
2. RELOCATED 02 METER.
3. RELOCATED N2 METER.
4. RELOCATED 02/N2 METER.
5. 02 DROP TO WORK BENCH, COORDINATE WITH WORK BENCH HEIGHT.
6. N2 DROP LAU TROTTER.

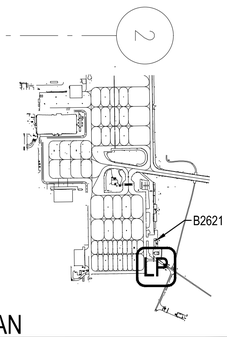

KEY PLAN

SCALE: NTS

LP = GENERAL VICINITY OF LOX PLANT

1/4" = 1'-0"

0 2 4 8 12

APPR | DATE | DESCRIPTION | SYM

NAVFAC

LARRY D. SWARTZ — STATE OF WASHINGTON — 27501 — REGISTERED PROFESSIONAL ENGINEER

2-18-15 SEAL

notkin
mechanical engineers
www.notkin.com
telephone: 206.448.1911
facsimile: 206.448.9485
2301 5th Avenue, Suite 401
Seattle, WA 98121

Contact: Larry Swartz, P.E.
notkin#: 214024
A/E INFO

APPROVED
FOR COMMANDER NAVFAC 3/2/15
ACTIVITY
NAS WHIDBEY ISLAND
SATISFACTORY TO DATE
DES: BCD | DRW: JML | CHK: LDS
<<PM/DM>> JOSEPH KISIDAY
BRANCH MANAGER
CHIEF ENG/ARCH
<<XXX>>

DEPARTMENT OF THE NAVY
NAVAL FACILITIES ENGINEERING COMMAND – NORTHWEST
NAVAL AIR STATION WHIDBEY ISLAND
AULT FIELD – OAK HARBOR, WA

NAVAL AIR STATION WHIDBEY ISLAND
OAK HARBOR, WA

FY-15 MCON PROJECT P-259 P-8A AIRCRAFT APRON EXPANSION - PART A

LOX PLANT PROCESS PIPING PLAN

SCALE: AS NOTED
EPROJECT NO.:
CONSTR. CONTR. NO. N44255-15-C-6003
NAVFAC DRAWING NO. 1603046 3
SHEET 209 OF 302

D-111

DRAWFORM REVISION: 10 MARCH 2009

L:\PROJECTS\214024 - Navy - 11TO08 - NASWI P232 Hangar\Drawings\Part A\D-111.dwg, 2/12/2015 6:20:02 PM, r

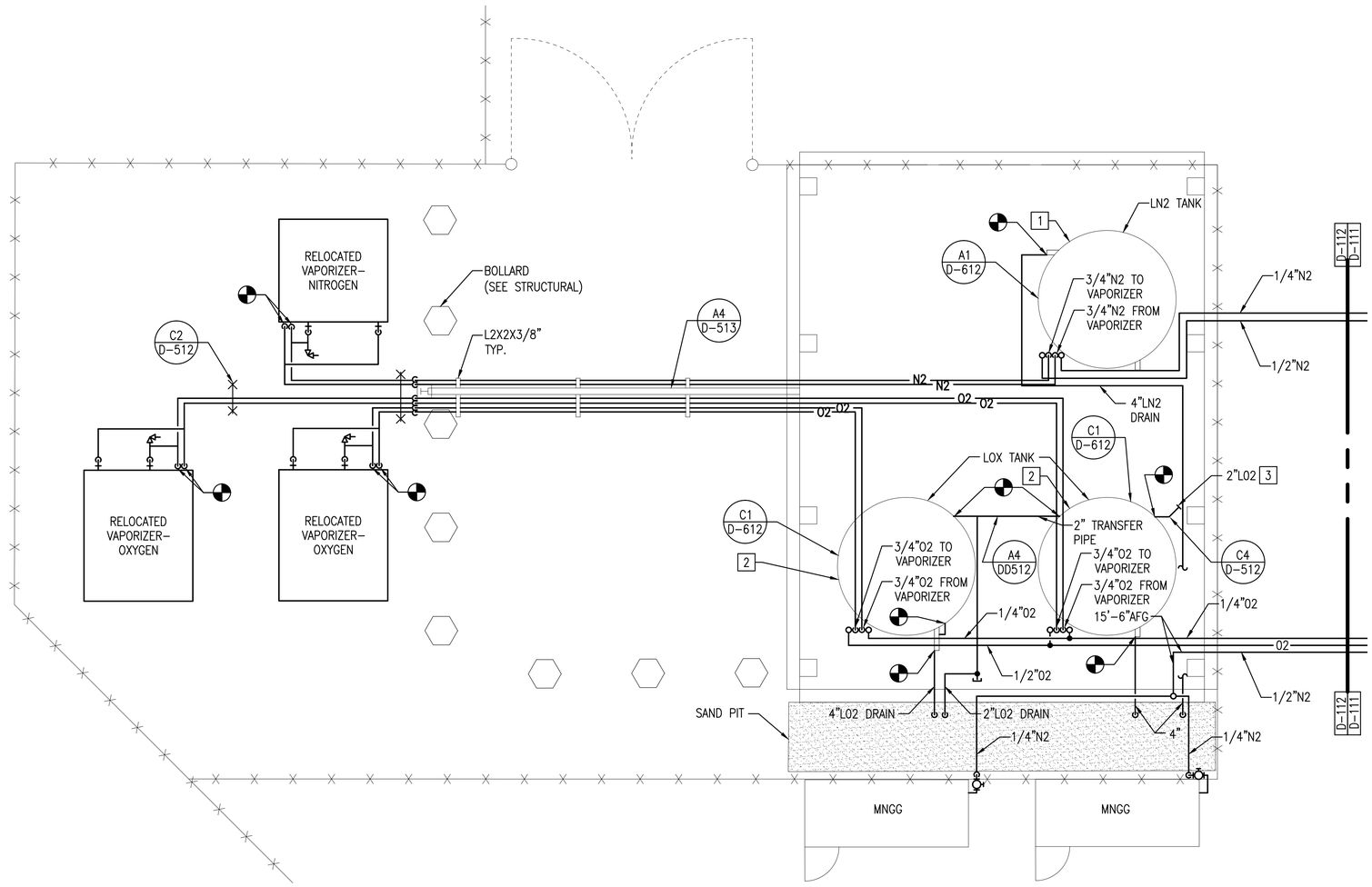

LOX PLANT PROCESS PIPING PLAN

SCALE: 1/4"=1'-0"

SHEET KEY NOTES:

1. RELOCATED 2,000 GALLON VERTICAL LIQUID NITROGEN STORAGE TANK.
2. RELOCATED 2,000 GALLON VERTICAL LIQUID OXYGEN STORAGE TANK.
3. SEE DETAIL C4/D–512 FOR MOUNTING SUPPORT.

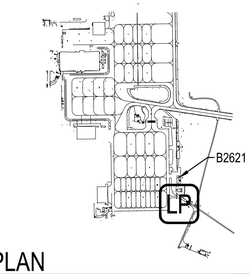

KEY PLAN

SCALE: NTS

LP = GENERAL VICINITY OF LOX PLANT

1/4" = 1'-0"

0 2 4 8 12

APPR	DATE	DESCRIPTION	SYM

NAVFAC

LARRY D. SWARTZ — STATE OF WASHINGTON — 27501 — REGISTERED PROFESSIONAL ENGINEER

2–18–15 SEAL

notkin
mechanical engineers
www.notkin.com
telephone: 206.448.1911
facsimile: 206.448.9485
2301 5th Avenue, Suite 401
Seattle, WA 98121

Contact: Larry Swartz, P.E.
notkin#: 214024 A/E INFO

APPROVED

FOR COMMANDER NAVFAC 3/2/15

ACTIVITY

NAS WHIDBEY ISLAND

SATISFACTORY TO DATE

DES: BCD | DRW: JML | CHK: LDS

<<PM/DM>> JOSEPH KISIDAY

BRANCH MANAGER

CHIEF ENG/ARCH

<<XXX>>

DEPARTMENT OF THE NAVY
NAVAL FACILITIES ENGINEERING COMMAND
NAVAL AIR STATION WHIDBEY ISLAND

NAVAL FACILITIES ENGINEERING COMMAND ~ NORTHWEST
AULT FIELD – OAK HARBOR, WA

NAVAL AIR STATION WHIDBEY ISLAND
OAK HARBOR, WA

FY-15 MCON PROJECT P-259 P-8A AIRCRAFT APRON EXPANSION - PART A

LOX PLANT PROCESS PIPING PLAN

SCALE: AS NOTED

EPROJECT NO.:

CONSTR. CONTR. NO.
N44255-15-C-6003

NAVFAC DRAWING NO.
16030464

SHEET 210 OF 302

D-112

DRAWFORM REVISION: 10 MARCH 2009

L:\PROJECTS\214024 - Navy - 11D008 - NASWI FY252 Hangar\Drawings\Part A\D-112.dwg, 2/12/2015 6:20:12 PM, k

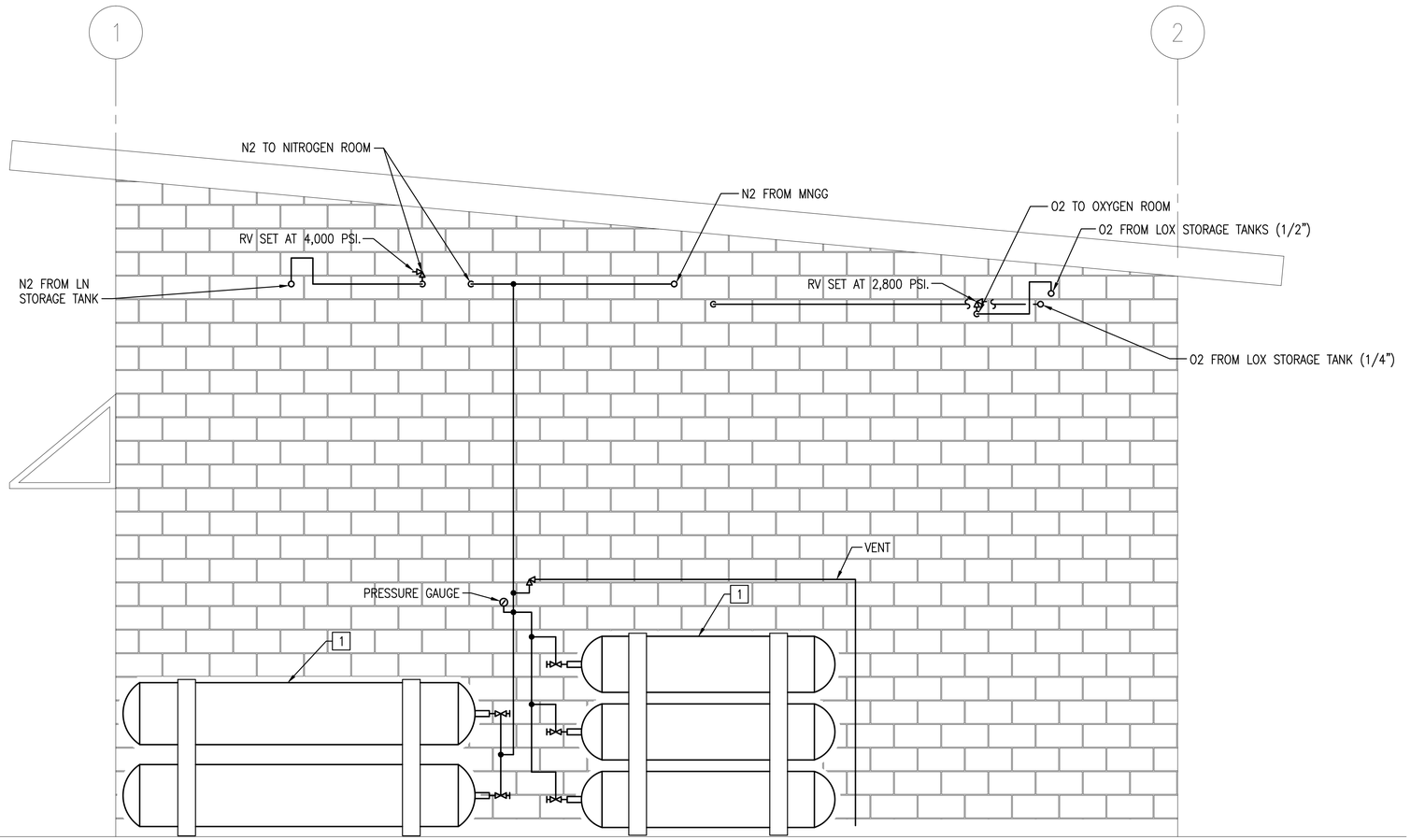

LOX PLANT - SOUTH ELEVATION

SCALE: 1/2"=1'-0" D-111 A1

SHEET KEY NOTES:

1 RELOCATED NITROGEN FLASKS INCLUDING SUPPORT STRUCTURE.

1/2" = 1'-0"

0 2 4 6

APPR	DATE	DESCRIPTION	CTM

NAVFAC

LARRY D. SWARTZ — STATE OF WASHINGTON — 27501 — REGISTERED PROFESSIONAL ENGINEER

2-18-15 SEAL

notkin
mechanical engineers
www.notkin.com
telephone: 206.448.1911
facsimile: 206.448.9485
2301 5th Avenue, Suite 401
Seattle, WA 98121

Contact: Larry Swartz, P.E.
notkin#: 214024
A/E INFO

APPROVED:

FOR COMMANDER NAVFAC 3/2/15

ACTIVITY

NAS WHIDBEY ISLAND

SATISFACTORY TO DATE

DES: BCD | DRW: JML | CHK: LDS

<<PM/DM>> JOSEPH KISIDAY

BRANCH MANAGER

CHIEF ENG/ARCH

<<XXX>>

DEPARTMENT OF THE NAVY
NAVAL FACILITIES ENGINEERING COMMAND
NAVAL AIR STATION WHIDBEY ISLAND

NAVAL FACILITIES ENGINEERING COMMAND – NORTHWEST
AULT FIELD – OAK HARBOR, WA
NAVAL AIR STATION WHIDBEY ISLAND
OAK HARBOR, WA

FY-15 MCON PROJECT P-259 P-8A AIRCRAFT APRON EXPANSION - PART A

LOX PLANT – EXTERIOR ELEVATION

SCALE: AS NOTED

EPROJECT NO.:

CONSTR. CONTR. NO.
N44255-15-C-6003

NAVFAC DRAWING NO.
16030465

SHEET 211 OF 302

D-211

DRAWFORM REVISION: 10 MARCH 2009

L:\PROJECTS\214024 - Navy - 11DO08 - NASWI P2S2 Hangar\Drawings\Part A\D-211.dwg, 2/12/2015 6:20:15 PM, r

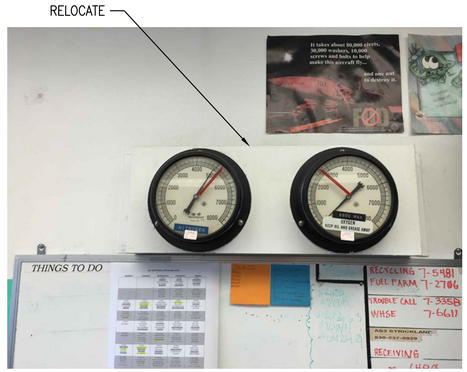

B2621 N2/02 GUAGES DETAIL - RELOCATE TO LOX PLANT OFFICE — C1

SCALE: NONE — D-612

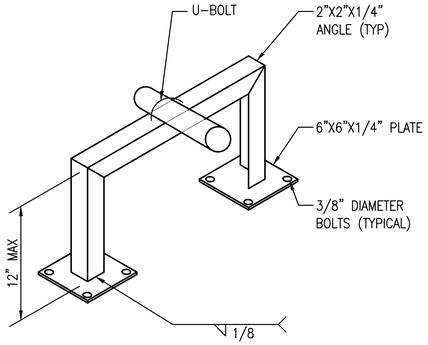

GROUND LEVEL PIPE SUPPORT DETAIL — C2

SCALE: NONE — D-112, D-512

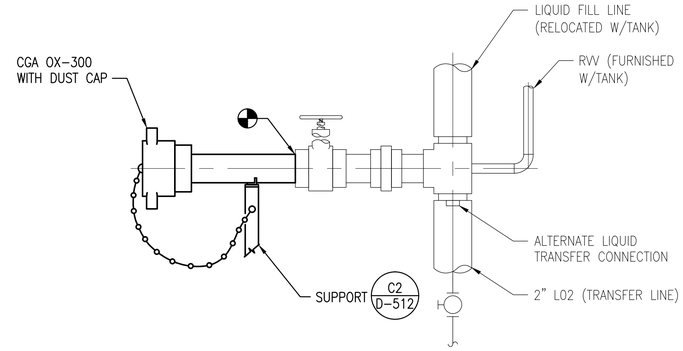

PIPING DETAIL — C4

SCALE: NONE — D-112

N2 & 02 VAPORIZERS TO BE RELOCATED. PROVIDE NEW SEISMIC STRAPS AT LOX PLANT

02 & N2 VAPORIZERS DETAIL — B1

SCALE: NONE — D-612, DD111

B2621 02 MANIFOLD TO BE RELOCATED DETAIL — B2

SCALE: NONE — DD111, D-612

B2621 N2 FLASKS DETAIL — A1

SCALE: NONE — D-512, DD111

MNGG DETAIL — A2

SCALE: NONE — D-612, DS111

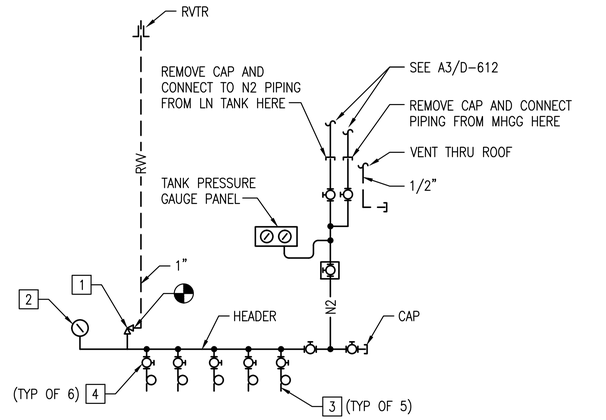

NOTE: SEE DETAIL A1/DD512 FOR PORTIONS OF THE B2621 NITROGEN MANIFOLD TO BE RELOCATED TO THE LOX PLANT.

SHEET KEY NOTES:

1. STAINLESS STEEL RELIEF VALVE (SIMILAR TO PIPING SYSTEM MATERIAL), RELIEF PRESSURE SET AT 4,000 PSIG.
2. STAINLESS STEEL PRESSURE GAUGE (SIMILAR TO PIPING SYSTEM MATERIAL), PRESSURE RANGE = 0 – 6,000 PSIG. CALIBRATED AT FACTORY.
3. CYLINDER CONNECTING COIL WITH HANDLE.
4. STAINLESS STEEL GLOBE VALVE (SIMILAR TO PIPING SYSTEM MATERIAL), PRESSURE RATED AT 6,000 PSIG.

GENERAL NOTES:

1. THIS ENTIRE MANIFOLD & VALVES, GAUGES ARE EXISTING TO BE RELOCATED TO THE LOX PLANT.

EXISTING NITROGEN MANIFOLD DETAIL — A4

SCALE: NONE — D-111

APPR	DATE	DESCRIPTION	SYM

NAVFAC

LARRY D. SWARTZ — STATE OF WASHINGTON — 27501 — REGISTERED PROFESSIONAL ENGINEER
2-18-15 SEAL

notkin
mechanical engineers
www.notkin.com
telephone: 206.448.1911
facsimile: 206.448.9485
2301 5th Avenue, Suite 401
Seattle, WA 98121

Contact: Larry Swartz, P.E.
notkin#: 214024
A/E INFO

APPROVED
FOR COMMANDER NAVFAC 3/2/15

ACTIVITY
NAS WHIDBEY ISLAND

SATISFACTORY TO DATE

DES: BCD | DRW: JML | CHK: LDS

<<PM/DM>> JOSEPH KISIDAY
BRANCH MANAGER
CHIEF ENG/ARCH
<<XXX>>

DEPARTMENT OF THE NAVY
NAVAL FACILITIES ENGINEERING COMMAND
NAVAL AIR STATION WHIDBEY ISLAND

NAVAL FACILITIES ENGINEERING COMMAND ~ NORTHWEST
AULT FIELD - OAK HARBOR, WA

NAVAL AIR STATION WHIDBEY ISLAND
OAK HARBOR, WA

FY-15 MCON PROJECT P-259 P-8A AIRCRAFT APRON EXPANSION - PART A

DETAILS

SCALE: AS NOTED
EPROJECT NO.:
CONSTR. CONTR. NO.: N44255-15-C-6003
NAVFAC DRAWING NO.: 16030466
SHEET 212 OF 302

D-512

DRAWFORM REVISION: 10 MARCH 2009

L:\PROJECTS\214024 - Navy - 11DD08 - NASWI FY252 Hangar\Drawings\Part A\D-512.dwg, 2/12/2015 8:20:19 PM, k

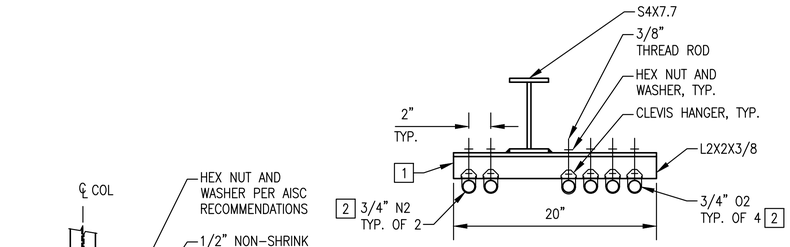

CANTILEAVER SUPPORT

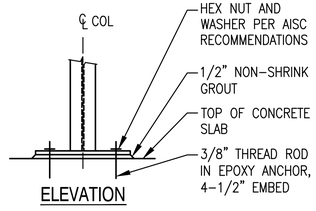

ELEVATION

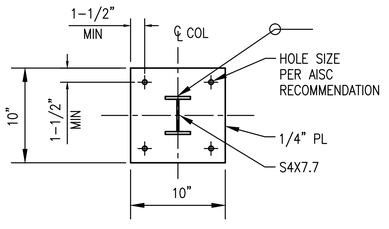

PLAN VIEW

BASE PLATE

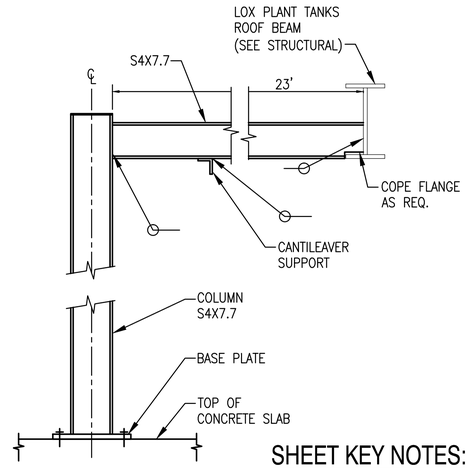

SHEET KEY NOTES:

1. SEE DRAWING PLAN FOR SUPPORT LOCATIONS
2. SUSPEND PIPING MAX 12" BELOW SUPPORT

N2/O2 PIPE SUPPORT DETAIL (A4)
SCALE: NONE D-112

APPR	
DATE	
DESCRIPTION	
SYM	

NAVFAC

LARRY D. SWARTZ — STATE OF WASHINGTON — 27501 — REGISTERED PROFESSIONAL ENGINEER
2-18-15 SEAL

notkin
mechanical engineers
www.notkin.com
telephone: 206.448.1911
facsimile: 206.448.9485
2301 5th Avenue, Suite 401
Seattle, WA 98121

Contact: Larry Swartz, P.E.
notkin#: 214024
A/E INFO

APPROVED
FOR COMMANDER NAVFAC 3/2/15

ACTIVITY
NAS WHIDBEY ISLAND

SATISFACTORY TO DATE

DES: BCD | DRW: JML | CHK: LDS

<<PM/DM>> JOSEPH KISIDAY

BRANCH MANAGER

CHIEF ENG/ARCH

<<XXX>>

DEPARTMENT OF THE NAVY
NAVAL FACILITIES ENGINEERING COMMAND
NAVAL AIR STATION WHIDBEY ISLAND

NAVAL FACILITIES ENGINEERING COMMAND ~ NORTHWEST
AULT FIELD - OAK HARBOR, WA

NAVAL AIR STATION WHIDBEY ISLAND
OAK HARBOR, WA

FY-15 MCON PROJECT P-259 P-8A AIRCRAFT
APRON EXPANSION - PART A

DETAILS

SCALE: AS NOTED
EPROJECT NO.:
CONSTR. CONTR. NO. N44255-15-C-6003
NAVFAC DRAWING NO. 16030467
SHEET 213 OF 302

D-513

DRAWFORM REVISION: 10 MARCH 2009

L:\PROJECTS\214024 - Navy - 11D008 - NASWI P232 Hangar\Drawings\Part A\D-513.dwg, 2/12/2015 6:20:22 PM, r

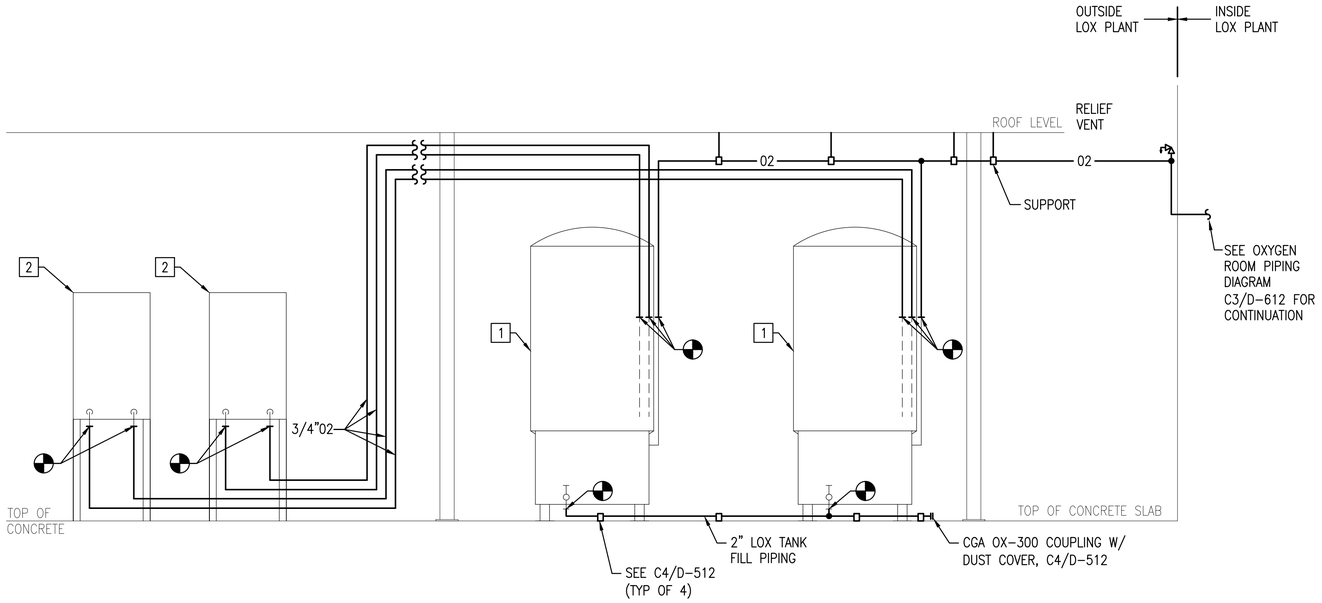

LOX PLANT OXYGEN DIAGRAM

SCALE: NONE D-111 C1

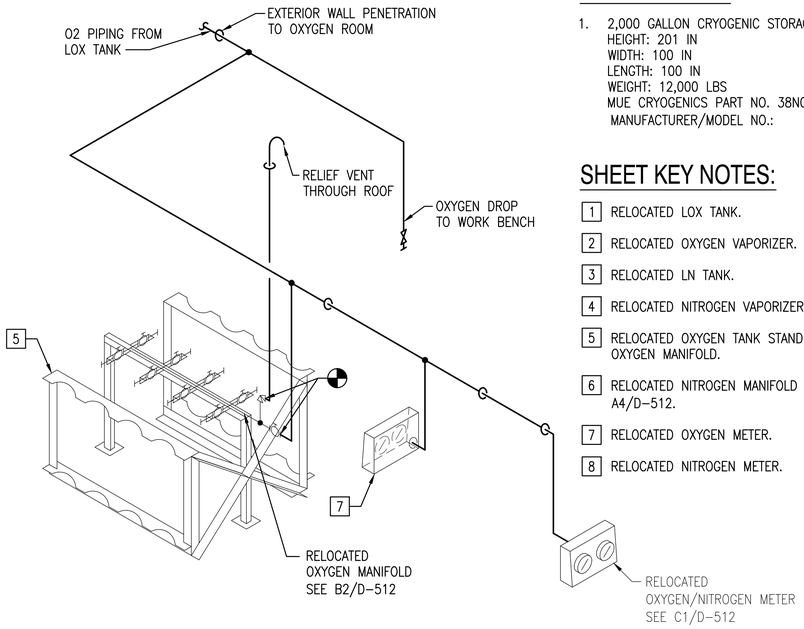

OXYGEN ROOM PIPING DIAGRAM

SCALE: NONE D-612, D-111 C3

SHEET NOTES:

1. 2,000 GALLON CRYOGENIC STORAGE TANKS:
   HEIGHT: 201 IN
   WIDTH: 100 IN
   LENGTH: 100 IN
   WEIGHT: 12,000 LBS
   MUE CRYOGENICS PART NO. 38N0006
   MANUFACTURER/MODEL NO.:

SHEET KEY NOTES:

1. RELOCATED LOX TANK.
2. RELOCATED OXYGEN VAPORIZER.
3. RELOCATED LN TANK.
4. RELOCATED NITROGEN VAPORIZER.
5. RELOCATED OXYGEN TANK STAND AND OXYGEN MANIFOLD.
6. RELOCATED NITROGEN MANIFOLD A4/D-512.
7. RELOCATED OXYGEN METER.
8. RELOCATED NITROGEN METER.

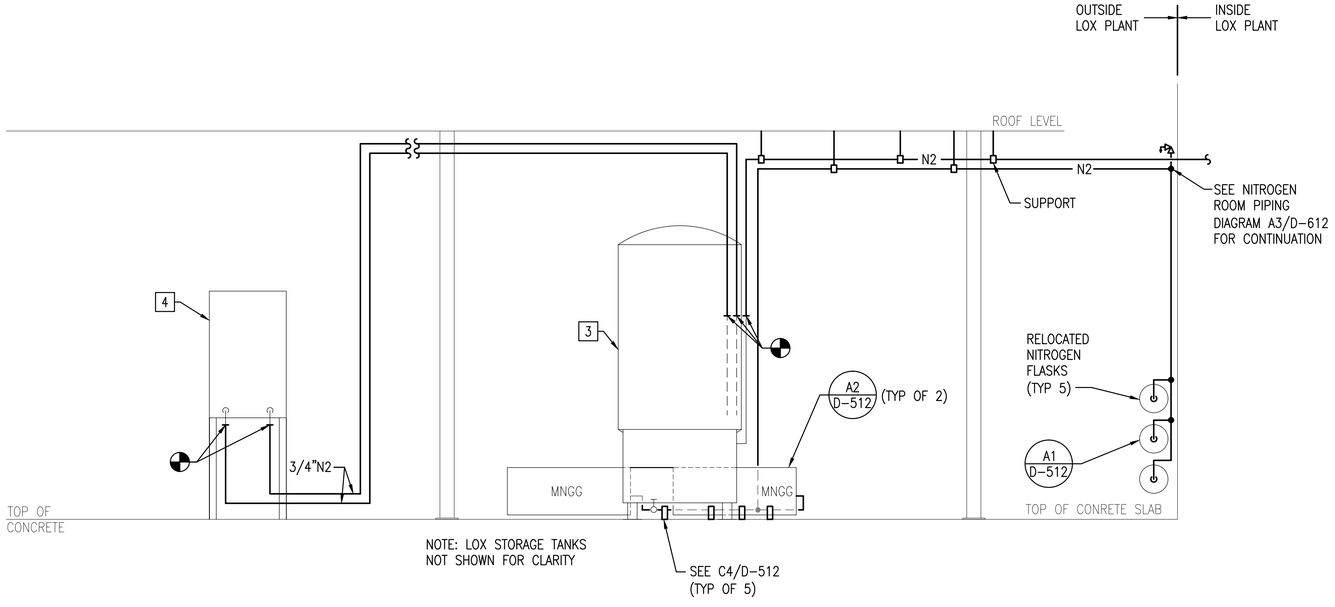

LOX PLANT NITROGEN DIAGRAM

SCALE: NONE D-111 A1

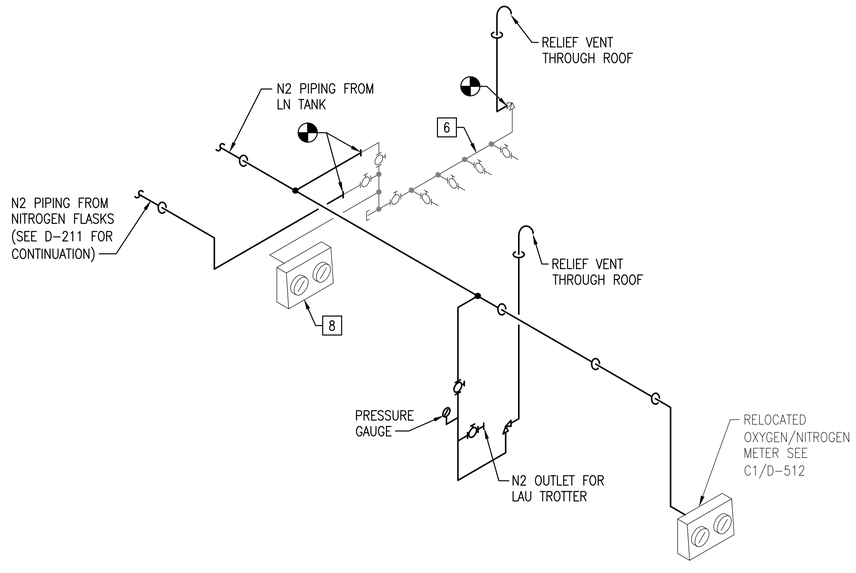

NITROGEN ROOM PIPING DIAGRAM

SCALE: NONE D-512, D-612, D-111 A3

APPR | DATE | DESCRIPTION | SYM

NAVFAC

LARRY D. SWARTZ — STATE OF WASHINGTON — 27501 — REGISTERED PROFESSIONAL ENGINEER — 2-18-15 SEAL

notkin
mechanical engineers
www.notkin.com
telephone: 206.448.1911
facsimile: 206.448.9485
2301 5th Avenue, Suite 401
Seattle, WA 98121

Contact: Larry Swartz, P.E.
notkin#: 214024
A/E INFO

APPROVED
FOR COMMANDER NAVFAC 3/2/15

ACTIVITY
NAS WHIDBEY ISLAND

SATISFACTORY TO	DATE
DES: BCD	DRW: JML CHK: LDS
<<PM/DM>>	JOSEPH KISIDAY
BRANCH MANAGER	
CHIEF ENG/ARCH	
<<XXX>>	

DEPARTMENT OF THE NAVY
NAVAL FACILITIES ENGINEERING COMMAND
NAVAL AIR STATION WHIDBEY ISLAND

NAVAL FACILITIES ENGINEERING COMMAND – NORTHWEST
AULT FIELD – OAK HARBOR, WA

NAVAL AIR STATION WHIDBEY ISLAND
OAK HARBOR, WA

FY-15 MCON PROJECT P-259 P-8A AIRCRAFT APRON EXPANSION - PART A

OXYGEN AND NITROGEN DIAGRAMS

SCALE:	AS NOTED
EPROJECT NO.:	
CONSTR. CONTR. NO.	N44255-15-C-6003
NAVFAC DRAWING NO.	16030468
SHEET	214 OF 302

D-612

DRAWFORM REVISION: 10 MARCH 2009

L:\PROJECTS\214024 - Navy - 11TO08 - NAS\W P25\2 Hangar\Drawings\Part A\D-612.dwg, 2/12/2015 6:20:24 PM, Y

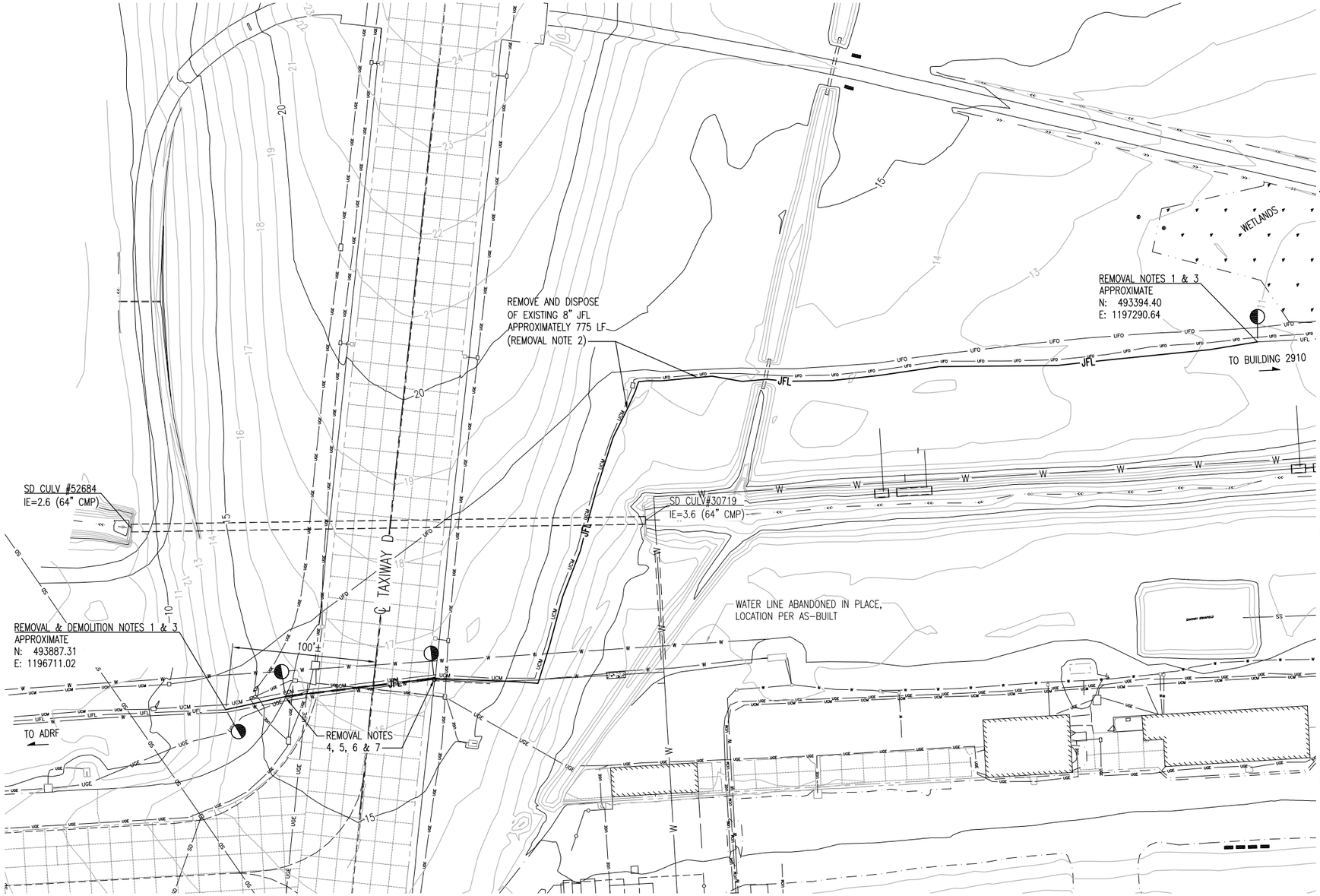

GENERAL WORK NOTES

1. NOTIFY THE CONTRACTING OFFICER REPRESENTATIVE AND THE BASE FIRE CHIEF IN WRITING 24 HOURS PRIOR TO PERFORMING ANY HOT WORK AND OBTAIN A HOT WORK PERMIT. PROVIDE A FIRE EXTINGUISHER AND FIRE WATCH AT EACH LOCATION WHERE HOT WORK IS PERFORMED.
2. THE CONTRACTOR SHALL TAKE ALL NECESSARY PRECAUTIONS TO MINIMIZE STATIC IGNITION HAZARD.
3. LOCATION OF EXISTING UNDERGROUND UTILITIES ARE APPROXIMATE. THE CONTRACTOR SHALL VERIFY HORIZONTAL AND VERTICAL LOCATIONS AND OBTAIN A DIG PERMIT PRIOR TO PERFORMING EXCAVATION WORK.
4. SURVEY PERFORMED BY PACIFIC SURVEY & ENGINEERING. SURVEY CONTROL IS PRESENTED ON SHEET V-101.

PHASING AND SEQUENCING NOTES

1. THE PIPELINE RE-ALIGNMENT WORK SHALL BE COMPLETED PRIOR TO STARTING EARTHWORK ASSOCIATED WITH THE APRON THAT WOULD REQUIRE EQUIPMENT TO CROSS THE PIPELINE OR EXCAVATION IN THE AREA OF THE RE-ALIGNMENT.
2. THE EXISTING ADRF SUPPLY PIPELINE SHALL NOT BE TAKEN OUT OF SERVICE AND THE CUTOVER WORK COMMENCE UNTIL THE NEW REALIGNED SECTION OF THE PIPELINE HAS BEEN INSTALLED AND SWAB PIGGED.
3. THE MAXIMUM DURATION OF ANY OUTAGE (CUTOVER) TO THE ADRF IS 72 HOURS. AN OUTAGE IS DEFINED AS ANY ACTIVITY THAT WOULD INTERRUPT FUEL TRANSFER OPERATIONS TO THE ADRF.
4. SUBMIT WORK PLAN TO THE CONTRACTING OFFICER 30 CALENDAR DAYS PRIOR TO ANY REQUESTED OUTAGES.

PRE-CUTOVER REQUIREMENTS

THE FOLLOWING TASKS SHALL BE COMPLETED PRIOR TO THE CUTOVER OUTAGE.

1. CONSTRUCT THE NEW PIPELINE BETWEEN THE TIE-IN POINTS INCLUSIVE OF THE TAXIWAY D CROSSING.
2. PERFORM ALL REQUIRED COATING TESTS AND COATING REPAIRS.
3. BACKFILL THE PIPELINE EXCEPT TIE-IN POINTS.
4. SWAB PIG THE REALIGNED SEGMENT WITH COMPRESSED AIR.

CUTOVER SEQUENCING AND REQUIREMENTS

IN GENERAL FOLLOWING TASKS SHALL BE COMPLETED DURING THE 72 HOUR CUTOVER OUTAGE.

1. THE EXISTING 6,100± FEET OF 8" DIAMETER PIPELINE BETWEEN BUILDING 2910 AND THE ADRF SHALL BE DEFUELED. THE CONTRACTOR SHALL DEFUEL THE PIPELINE USING AVAILABLE LOW POINT DRAINS AND BY PIGGING. COORDINATE WITH NAS WHIDBEY FUEL FOR FUEL RECEIPT DURING DEFUEL PIGGING. RESIDUAL FUEL REMAINING IN THE PIPING AFTER PIGGING IS THE CONTRACTOR'S RESPONSIBILITY. THE EXISTING PIPELINE IS EQUIPPED WITH A LAUNCHER AND A RECEIVER. THE PIG SHALL BE PROPELLED WITH NITROGEN AND THE FUEL RECEIVED THROUGH THE RECEIPT FILTER/SEPARATORS AT ADRF. PROVIDE 2 SETS OF REPLACEMENT ELEMENTS (SEE NOTE 7 FOR TYPE).
2. CUTTING THE EXISTING PIPELINE AT THE TIE-IN POINTS. REFER TO REMOVAL & DEMOLITION NOTES FOR LOCATIONS.
3. PERFORM THE TIE-IN WELDING OF THE NEW PIPELINE.
4. PERFORM INITIAL FILL OF PIPELINE WITH FUEL FROM THE BUILDING 2910. (THE CONSOLIDATED FUEL FACILITY AT AULT FIELD).
5. PRESSURE TEST THE PIPELINE FROM BUILDING 2910 TO THE ADRF. PRESSURE TEST BOUNDARY SHALL BE THE DOUBLE BLOCK & BLEED VALVES AT THE LAUNCHER AND RECEIVER.
6. FLUSH THE PIPELINE.
7. ALL FUEL USED IN THE FLUSHING AND THE COMMISSIONING SHALL BE FILTERED AT THE ADRF VIA THE RECEIPT FILTERS. THE CONTRACTOR SHALL SUPPLY 5 SETS OF FILTER SEPARATOR ELEMENTS FOR A 600 GPM HORIZONTAL FILTER SEPARATOR QUALIFIED TO API 1581, GROUP II, CLASS B, THIRD EDITION.
8. CONTACT HCNA HANSACONSULT NORTH AMERICA, 200 INTERNATIONAL DRIVE, BUILDING 120, PORTSMOUTH, NH 03801 AT 603-422-8833 TO RE-CALIBRATE THE LEAK DETECTION SKID FOLLOWING PRESSURE TESTING AND FLUSHING.

REMOVAL & DEMOLITION NOTES

1. POTHOLE TIE-IN POINTS TO DETERMINE ACTUAL EXISTING JFL LOCATION AND DEPTH AND LOCATION OF ADJACENT UTILITIES.
2. REMOVE AND DISPOSE OF, OFF-BASE IN ACCORDANCE WITH ALL SPPLICABLE REGULATIONS, THE EXISTING JET FUEL PIPELINE BETWEEN THE POINTS INDICATED WITH THE EXCEPTION OF THE CARRIER PIPELINE WITHIN THE EXISTING TAXIWAY D CASED CROSSING. THE EXISTING PIPELINE HAS AN EXTRUDED POLYETHYLENE COATING SYSTEM.
3. CUT A MINIMUM OF 12" FROM ANY EXISTING WELD.
4. CUT CARRIER PIPE A MINIMUM OF 12" BEYOND THE END OF THE CASING SEAL. (TYPICAL 2 PLACES)
5. FILL CARRIER PIPE TO REMAIN IN THE CASING WITH NON-SHRINK GROUT.
6. PROVIDE WELDED FLAT PLATE. SEE DETAIL D5 / DP501 .
7. REMOVE CASING VENTS (TYPICAL 2) TO 2 FEET BELOW FINISHED GRADE. PROVIDE THREADED PLUG. (NOTE: THE ANNULAR SPACE BETWEEN THE CARRIER PIPE AND THE CASING IS FILLED WITH A DIELECTRIC GEL.)

ABBREVIATIONS

ADRF	AIRFIELD DIRECT REFUELING FACILITY
BOP	BOTTOM OF PIPE
CMP	CORRUGATED METAL PIPE
CONT	CONTINUOUS
CS	CARBON STEEL
CU	COPPER
HPV	HIGH POINT VENT
ME	MATCH EXISTING
NTS	NOT TO SCALE
OC	ON CENTER
SD	STORM DRAIN LINE
SS	STAINLESS STEEL
STA	STATION
THD	THREADED
TW	TWISTED WIRE
TYP	TYPICAL
WNF	WELD NECK FLANGE
WWF	WELDED WIRE FABRIC
3D	3 DIAMETER (RADIUS)

POL PIPELINE EXISTING CONDITIONS PLAN

SCALE: 1" = 40'

PLAN NORTH

LEGEND

- LIMITS OF REMOVAL OPEN-LEAVE, CLOSED-REMOVE
- CONNECT TO EXISTING
- JFL — JET FUEL LINE

GRAPHIC SCALE

40 0 40 80 FT

SCALE: 1" = 40'

APPR | DATE | DESCRIPTION | SYM

NAVFAC

STATE OF ALASKA 49 TH
KEVIN S. MURPHY
CE-9238
REGISTERED PROFESSIONAL ENGINEER
SEAL

A/E INFO

APPROVED

FOR COMMANDER NAVFAC

ACTIVITY
NAS WHIDBEY ISLAND

SATISFACTORY TO DATE

DES: KSM | DRW: BxD | CHK: CAB

<<PM/DM>> JOSEPH KISIDAY

BRANCH MANAGER

CHIEF ENG/ARCH

<<XXX>>

DEPARTMENT OF THE NAVY
NAVAL FACILITIES ENGINEERING COMMAND NORTHWEST
NAVAL AIR STATION WHIDBEY ISLAND

NAVAL FACILITIES ENGINEERING COMMAND ~ NORTHWEST
AULT FIELD - OAK HARBOR, WA
NAVAL AIR STATION WHIDBEY ISLAND OAK HARBOR, WA

FY-15 MCON PROJECT P-259 P-8A AIRCRAFT APRON EXPANSION - PART A

POL PIPELINE EXISTING CONDITIONS PLAN & WORK NOTES

SCALE: AS NOTED

EPROJECT NO.:

CONSTR. CONTR. NO.
N44255-15-C-6003

NAVFAC DRAWING NO.
1603046 9

SHEET 215 OF 302

DP101

DRAWFORM REVISION: 10 MARCH 2009

FILE NAME: P:\projects\7952\Civil\Current Dwg %%\Civil\P-259DP101.dwg LAYOUT NAME: Layout1 PLOTTED: Tuesday, February 24, 2015 - 10:25am USER: dd

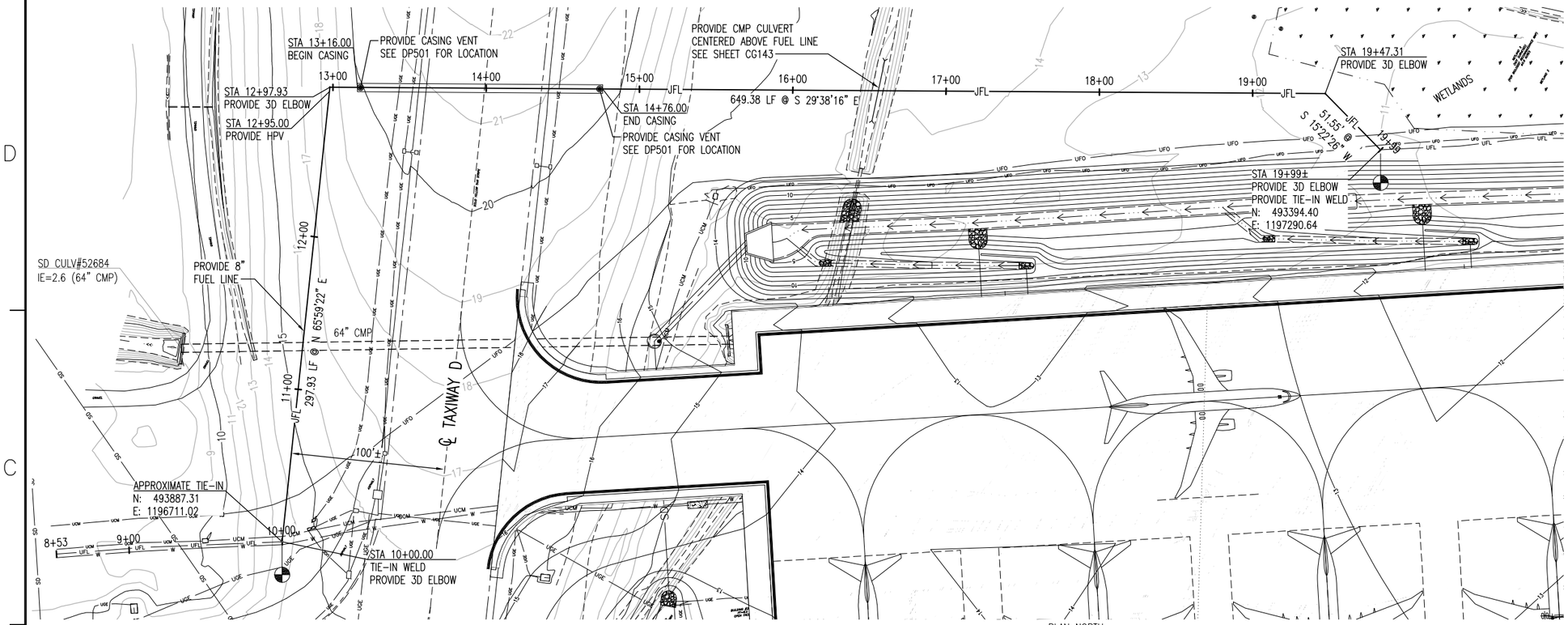

PLAN NORTH

PIPELINE RE-ALIGNMENT PLAN

SCALE: 1" = 40'

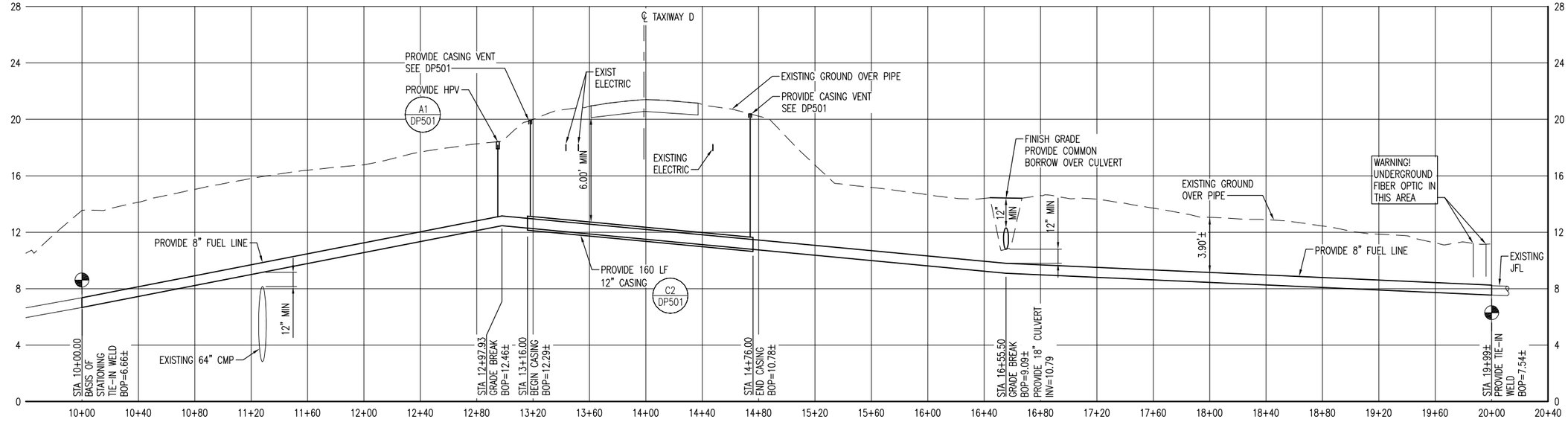

PIPELINE RE-ALIGNMENT PROFILE

SCALE: H: 1 = 40'
V: 1 = 4'

GRAPHIC SCALES

4 0 4 8 FT
SCALE: 1" = 4'

40 0 40 80 FT
SCALE: 1" = 40'

GENERAL NOTES

1. POTHOLE TIE-IN POINTS TO DETERMINE ACTUAL EXISTING JFL LOCATION AND DEPTH AND LOCATION OF ADJACENT UTILITIES.
2. ADJUST ALIGNMENT TO MATCH EXISTING JFL TIE-IN LOCATIONS
3. 3D BEND FITTINGS MAY BE TRIMMED TO CREATE REQUIRED ANGLE BASED ON ALIGNMENT AND PROFILE OF THE PIPELINE. 3D BEND FITTINGS MAY NOT BE TRIMMED TO LESS THAN A 9 DEGREE BEND ANGLE TO MAINTAIN A MINIMUM OF 3" BETWEEN WELD JOINTS.
4. SEE DETAIL B4 / DP501 FOR TYPICAL TRENCH SECTION.
5. SEE LEGEND AND ABBREVIATIONS ON SHEET DP101.

BASIS OF STATIONING

1. STA 10+00.00 AT APPROXIMATE TIE IN POINT AT NORTH END OF REALIGNMENT:
   N: 493887.31
   E: 1196711.02
2. STATIONING IS FOR REFERENCE ONLY.

SURVEY CONTROL

1. NASWI BASE HORIZONTAL DATUM. SEE SHEET V-101 FOR BASIS OF NORTHING/EASTING.
2. NASWI BASE VERTICAL DATUM. SEE SHEET V-101 FOR BASIS OF ELEVATION.

APPR | DATE | DESCRIPTION | SYM

NAVFAC

STATE OF ALASKA 49 TH
KEVIN S. MURPHY
CE-9238
REGISTERED PROFESSIONAL ENGINEER
28 Feb 2015
SEAL

A/E INFO

APPROVED

FOR COMMANDER NAVFAC

ACTIVITY
NAS WHIDBEY ISLAND

SATISFACTORY TO DATE

DES: KSM | DRW: BxD | CHK: CAB

<<PM/DM>> JOSEPH KISIDAY

BRANCH MANAGER

CHIEF ENG/ARCH
<<XXX>>

DEPARTMENT OF THE NAVY
NAVAL FACILITIES ENGINEERING COMMAND
NAVAL AIR STATION WHIDBEY ISLAND

NAVAL FACILITIES ENGINEERING COMMAND – NORTHWEST
AULT FIELD – OAK HARBOR, WA

NAVAL AIR STATION WHIDBEY ISLAND
OAK HARBOR, WA

FY-15 MCON PROJECT P-259 P-8A AIRCRAFT APRON EXPANSION - PART A

FUEL LINE RE-ALIGNMENT
PLAN AND PROFILE

SCALE: AS NOTED
EPROJECT NO.:
CONSTR. CONTR. NO.
N44255-15-C-6003
NAVFAC DRAWING NO.
16030470
SHEET 216 OF 302

DP201

DRAWFORM REVISION: 10 MARCH 2009

FILE NAME: P:\projects\79525\Cad\Current Dwg 's\Civil\P-259DP201.dwg LAYOUT NAME: Layout1 PLOTTED: Thursday, February 12, 2015 - 4:02pm USER: dd

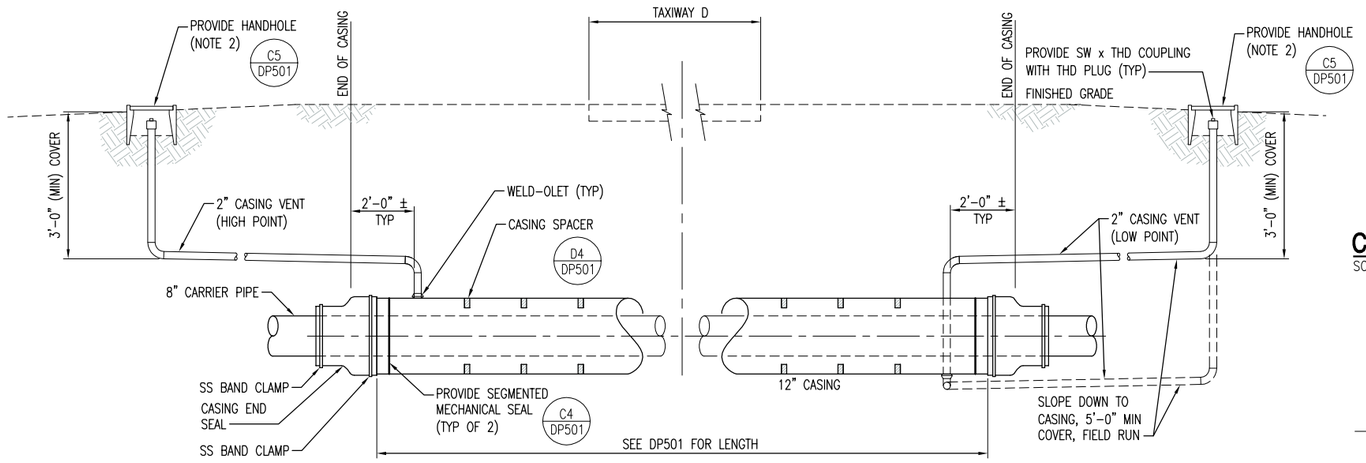

NOTES
1. FIELD DETERMINE SLOPE OF PIPE. INSTALL VENT AND DRAIN DEPENDENT UPON PIPE SLOPE.
2. CASING VENT AND HANDHOLE SHALL BE PROVIDED OUTSIDE OF THE PAVED TAXIWAY SHOULDER, NOT TO EXCEED 30 FEET FROM CASING CONNECTION AND WITHIN 10 FEET OF THE PIPELINE CENTERLINE.

PIPE CASING DETAIL C2
SCALE: NTS DP201

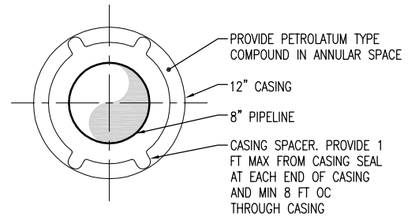

CASING SPACER DETAIL D4
SCALE: NTS DP501

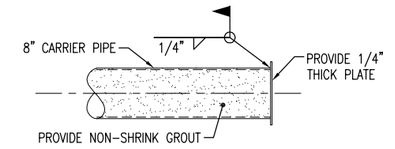

CARRIER PIPE ABANDONMENT D5
SCALE: NTS DP101

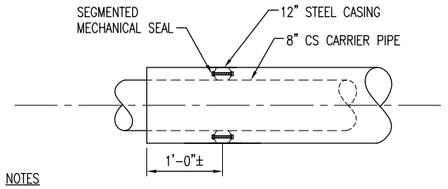

NOTES
1. CASING END SEALS AND SEGMENTED MECHANICAL SEAL SHALL BE INSTALLED AND TIGHTENED BEFORE BACKFILLING FUEL LINES.
2. CASING END SEAL NOT SHOWN FOR CLARITY.

SEGMENTED MECHANICAL SEAL DETAIL C4
SCALE: NTS DP501

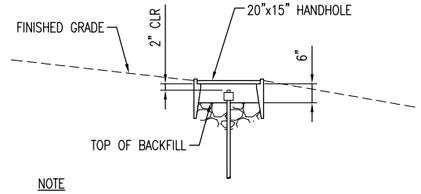

NOTE
1. HANDHOLE SHALL BE PRE-CAST REINFORCED CONCRETE BOX WITH 9 GAUGE WELD WIRE FRAME. COVER SHALL BE LIGHT DUTY ALUMINUM OR CAST IRON.

CASING VENT HANDHOLE C5
SCALE: NTS DP501

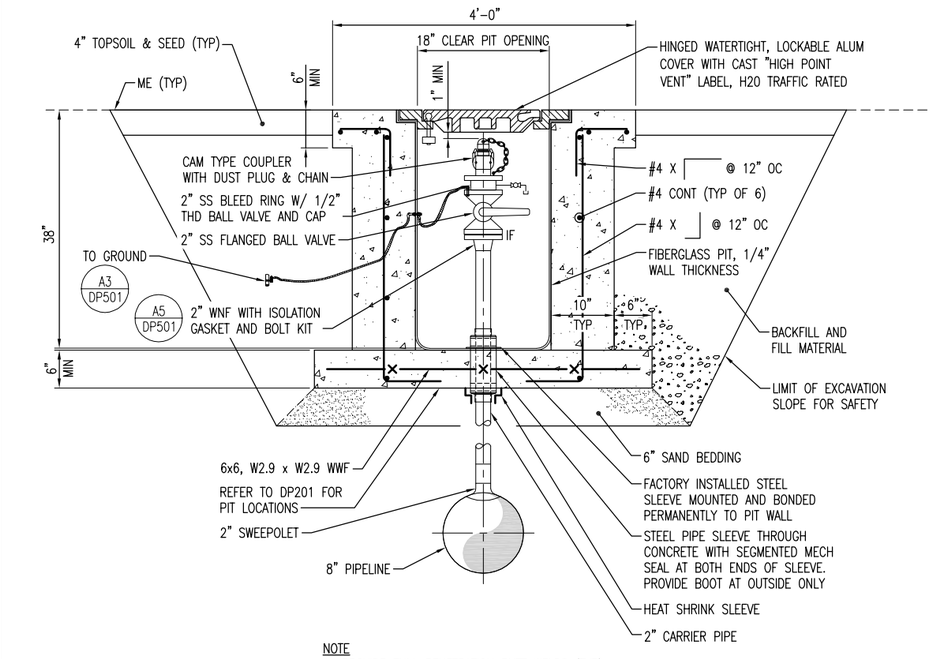

NOTE
1. PROVIDE FULL PENETRATION BUTT WELDS (TYP) ON BURIED HPV PIPING.

GRAPHIC SCALE
1 0 1 2 FT
SCALE: 1" = 1'-0"

BELOW GRADE HPV DETAIL A1
SCALE: 1" = 1'-0" DP201

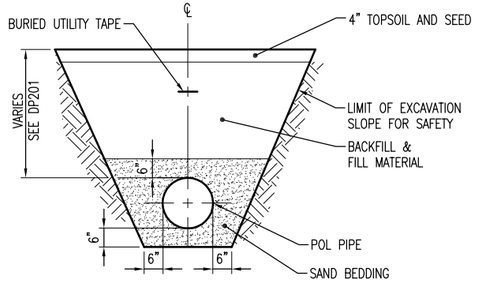

TYPICAL TRENCH SECTION B4
SCALE: NTS DP201

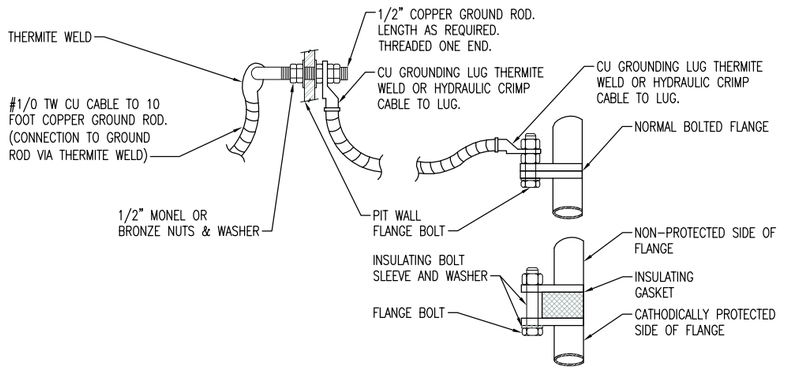

PIT FLANGE GROUNDING DETAIL A3
SCALE: NTS DP501

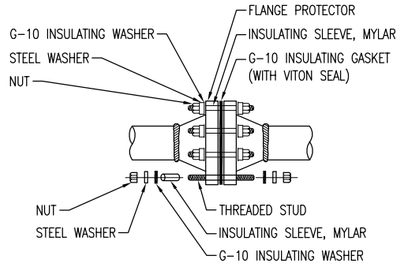

NOTES
1. WELD NECK FLANGE SHOWN. ASSEMBLY ON OTHER FLANGES IS SIMILAR.
2. INSULATING MATERIALS ARE TO BE SELECTED FOR COMPATIBILITY WITH PRODUCT IN THE PIPELINE AND THE OPERATING CONDITIONS.
3. PROVIDE FLANGE PROTECTOR.

ISOLATION FLANGE GASKET (IF) A5
SCALE: NTS DP501

GENERAL NOTES
1. SEE LEGEND AND ABBREVIATIONS ON SHEET DP101.

APPR | DATE | DESCRIPTION | SYM

NAVFAC

STATE OF ALASKA 49TH KEVIN S. MURPHY CE-9238 REGISTERED PROFESSIONAL ENGINEER SEAL

A/E INFO
APPROVED
FOR COMMANDER NAVFAC
ACTIVITY
NAS WHIDBEY ISLAND
SATISFACTORY TO DATE
DES: KSM DRW: Bx0 CHK: KBW
<<PM/DM>> JOSEPH KISIDAY
BRANCH MANAGER
CHIEF ENG/ARCH
<<XXX>>

DEPARTMENT OF THE NAVY
NAVAL FACILITIES ENGINEERING COMMAND ~ NORTHWEST
NAVAL AIR STATION WHIDBEY ISLAND
NAVAL FACILITIES ENGINEERING COMMAND ~ NORTHWEST
AULT FIELD - OAK HARBOR, WA
NAVAL AIR STATION WHIDBEY ISLAND OAK HARBOR, WA

FY-15 MCON PROJECT P-259 P-8A AIRCRAFT APRON EXPANSION - PART A

DETAILS

SCALE: AS NOTED
EPROJECT NO.:
CONSTR. CONTR. NO. N44255-15-C-6003
NAVFAC DRAWING NO. 16030471
SHEET 217 OF 302

DP501

DRAWFORM REVISION: 10 MARCH 2009

FILE NAME: P:\projects\7952\Cad\Current Dwg %\Civil\P-259DP501.dwg LAYOUT NAME: Layout1 PLOTTED: Thursday, February 12, 2015 - 4:02pm USER: dd

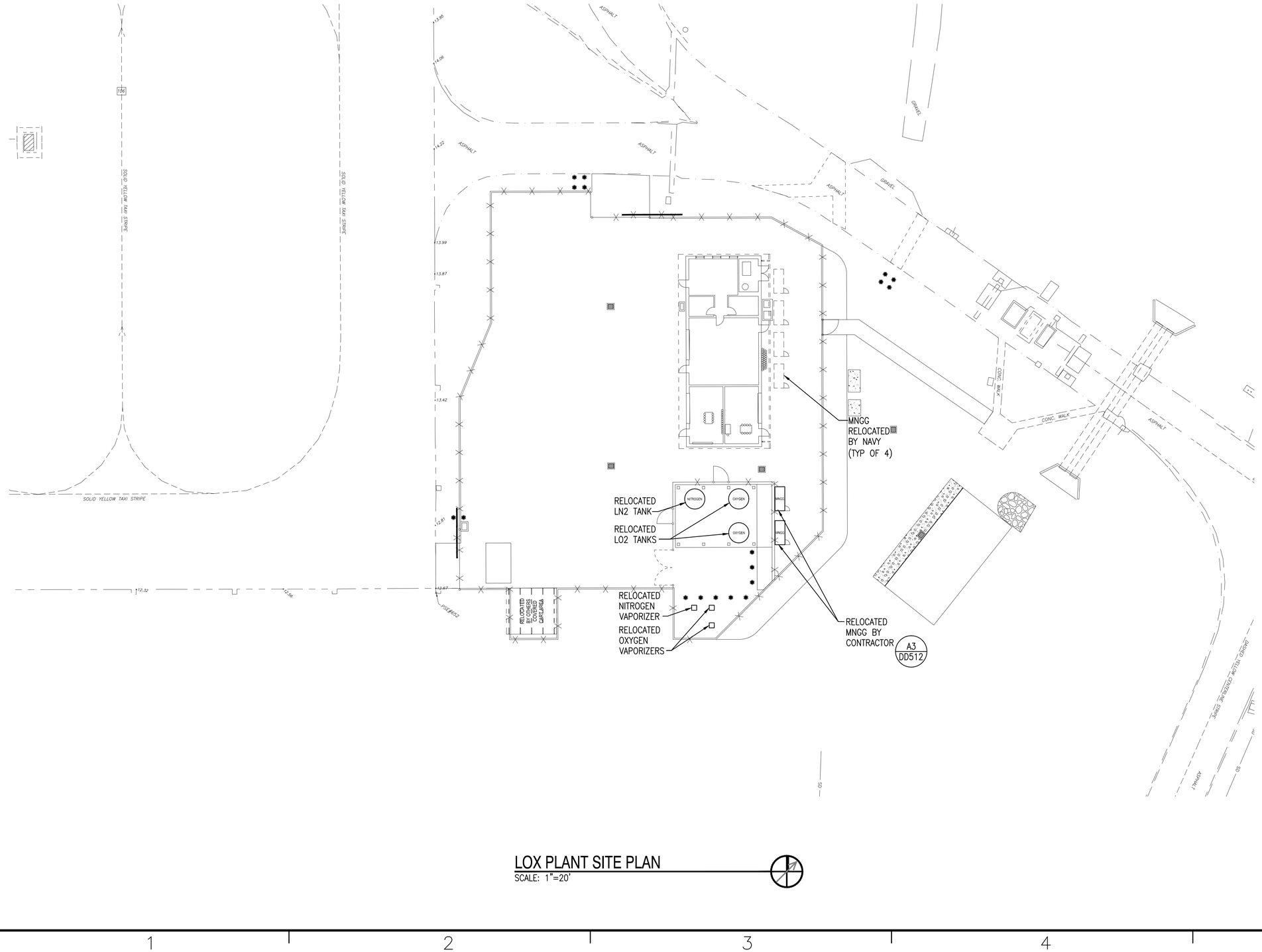

LOX PLANT SITE PLAN

SCALE: 1"=20'

1" = 20'-0"

0 20 40 60

APPR	DATE	DESCRIPTION	MJS

NAVFAC

LARRY D. SWARTZ
STATE OF WASHINGTON
27501
REGISTERED
PROFESSIONAL ENGINEER
2-18-15
SEAL

notkin
mechanical engineers
www.notkin.com
telephone: 206.448.1911
facsimile: 206.448.9485
2301 5th Avenue, Suite 401
Seattle, WA 98121

Contact: Larry Swartz, P.E.
notkin#: 214024
A/E INFO

APPROVED
FOR COMMANDER NAVFAC 3/2/15

ACTIVITY
NAS WHIDBEY ISLAND

SATISFACTORY TO DATE

DES: BCD	DRW: JML	CHK: LDS

<<PM/DM>> JOSEPH KISIDAY

BRANCH MANAGER

CHIEF ENG/ARCH

<<XXX>>

DEPARTMENT OF THE NAVY
NAVAL FACILITIES ENGINEERING COMMAND
NAVAL AIR STATION WHIDBEY ISLAND

NAVAL FACILITIES ENGINEERING COMMAND – NORTHWEST
AULT FIELD – OAK HARBOR, WA

NAVAL AIR STATION WHIDBEY ISLAND
OAK HARBOR, WA

FY-15 MCON PROJECT P-259 P-8A AIRCRAFT
APRON EXPANSION - PART A

LOX PLANT SITE PLAN

SCALE: AS NOTED
EPROJECT NO.:
CONSTR. CONTR. NO.
N44255-15-C-6003
NAVFAC DRAWING NO.
16030472
SHEET 218 OF 302

DS111

DRAWFORM REVISION: 10 MARCH 2009

L:\PROJECTS\214024 - Navy - 11TO08 - NASWI P252 HangarDrawings\Part A\DS111.dwg, 2/12/2015 6:20:46 PM, lr

MECHANICAL LEGEND

GENERAL

SYMBOL	ABBREVIATION	DESCRIPTION
		PIPE UP AND DOWN (SINGLE LINE)
		PIPE DOWN (SINGLE LINE)
		DOUBLE LINE PIPE ELBOW UP
		DOUBLE LINE PIPE ELBOW DOWN
		EXISTING WORK
		NEW WORK
P-1		PLUMBING SYMBOL
M-1		MECHANICAL SYMBOL
	POC	POINT OF CONNECTION
ø	DIA	DIAMETER OR ROUND
T		TEMPERATURE SENSOR
		CONNECTING PIPING
02		OXYGEN SENSOR
		ALARM LIGHT
DP / X		DIFFERENTIAL PRESSURE SENSOR

TITLE
SCALE: M-000

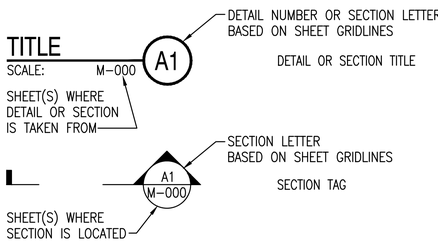

SUPPLY AIR GRD DESIGNATIONS

12"ø	DUCT CONNECTION SIZE
CD-1	GRD TYPE AND SIZE PER SCHEDULE
200S	CFM, S=SUPPLY

RETURN/EXHAUST AIR GRD DESIGNATIONS

8X8	DUCT CONNECTION SIZE
CG-1	GRD TYPE AND SIZE PER SCHEDULE
100E	CFM, E=EXHAUST, R=RETURN, T=TRANSFER

VALVES & FITTINGS

SYMBOL	ABBREVIATION	DESCRIPTION
		FLOW DIRECTION
		FLOW DIRECTION (HIGH POINT TO LOW POINT)
	PG	PRESSURE GAUGE
	DPG	DIFFERENTIAL PRESSURE GAUGE
		CAP
	GV	GATE VALVE
	CKV	CHECK VALVE
	BV	BALL VALVE
	ACV	AUTOMATIC CONTROL VALVE (2-WAY)
	ACV	AUTOMATIC CONTROL VALVE (3-WAY)
	P/T PORT	PRESSURE/TEMP PORT
	VTR	VENT THROUGH ROOF
	FD	FLOOR DRAIN
	DL(1)	DRIP LEG

AIR MOVING DEVICES & COMPONENTS

DEVICE	DESCRIPTION
	CENTRIFUGAL FAN

PIPING SYSTEMS

SYMBOL	ABBREVIATION	DESCRIPTION
RFL	RFL	REFRIGERANT LIQUID
RFG	RFG	REFRIGERANT GAS
D	D	INDIRECT DRAIN
HWS	HWS	HOT WATER SUPPLY
HWR	HWR	HOT WATER RETURN
A	A	COMPRESSED AIR
G	G	NATURAL GAS
CW	CW	COLD WATER
TP	TP	TRAP PRIMER
	W	WASTE BURIED
	V	VENT

DUCTWORK

DEVICE	ABBREVIATION	DESCRIPTION
BDD	BDD	BACK DRAFT DAMPER
	VD	MANUAL VOLUME DAMPER
	ACD	AUTOMATIC CONTROL DAMPER
	FD	VERTICAL FIRE DAMPER
AD	AD	ACCESS DOOR IN PLAN OR SIDE
R		DUCT RISES UP (IN DIRECTION OF AIRFLOW)
D		DUCT DROPS DOWN (IN DIRECTION OF AIRFLOW)
	HC	HEATING COIL
		FLEXIBLE CONNECTION

DUCTWORK CONT

SINGLE LINE	DOUBLE LINE	DESCRIPTION
RECT. / ROUND		TAKEOFF BOOT
ROUND / ROUND		TAKEOFF BOOT
RECT. / RECT. OR ROUND		45° LATERAL TAKEOFF
ROUND / ROUND		45° LATERAL TAKEOFF
RECT. / RECT.		BRANCH TAKEOFF
		RADIUS TEE
		BELL MOUTH FITTING (SMOOTH CONVERGING FOR ROUND AND FLAT OVAL; ⊖ = 90° FOR RECTANGULAR)
		H-HIGH, L-LOW, W-WALL G-GRILLE, R-REGISTER
		RADIUS ELBOW UP (SUPPLY)
		RADIUS ELBOW UP (RETURN/EXHAUST)
		RADIUS ELBOW DOWN (SUPPLY)
		RADIUS ELBOW DOWN (RETURN/EXHAUST)
		ROUND DUCT UP (SUPPLY/EXHAUST/RETURN)
		ROUND DUCT DN (SUPPLY/EXHAUST/RETURN)
		TRANSITION (ROUND TO ROUND/RECTANGULAR TO RECTANGULAR)
		TRANSITION (RECTANGULAR TO ROUND)
	W / R=W	RADIUS ELBOW
		FLEXIBLE DUCT
		INSULATED DUCT
		ELBOW WITH SPLITTER VANES
	CD	CEILING DIFFUSER
	CG	RETURN/EXHAUST GRILLE

ABBREVIATIONS

&	AND
A	AMP
A/C	AIR CONDITIONER
ACD	AUTOMATIC CONTROL DAMPER
AFF	ABOVE FINISHED FLOOR
APD	AIR PRESSURE DROP
ARCH.	ARCHITECTURAL
BC	BRANCH CONTROLLER
CD	CEILING DIFFUSER
CG	CEILING GRILLE
CU	CONDENSING UNIT
CFM	CUBIC FEET PER MINUTE
Db	DECIBEL
DB	DRY BULB
DDC	DIRECT DIGITAL CONTROLS
DIA	DIAMETER
DN	DOWN
DH	DUCT HEATER
EAT	ENTERING AIR TEMPERATURE
ERV	ENERGY RECOVERY VENTILATOR
EF	EXHAUST FAN
EG	EXHAUST GRILLE
EH	EXHAUST HOOD
F	FAHRENHEIT
FB	FILTER BOX
FPM	FEET PER MINUTE
GRD	GRILLES, REGISTERS, DIFFUSERS
HP	HEAT PUMP,HORSEPOWER
IN	INCH
KW	KILOWATT
LAT	LEAVING AIR TEMPERATURE
LBS.	POUNDS
MAX	MAXIMUM
MCA	MINIMUM CIRCUIT AMP
MBH	1000 BRITISH THERMAL UNITS PER HOUR
MECH	MECHANICAL
MFA	MAXIMUM FUSE AMP
MIN	MINIMUM
MOP	MAX OVERCURRENT PROTECTION
NC	NOISE CRITERION
ODP	OPEN DRIP PROOF
TEFC	TOTALLY ENCLOSED FAN COOLED
OSA	OUTSIDE AIR
P	PHASE
PD	PRESSURE DROP
QTY	QUANTATY
R	RETURN
SCR	SILICON CONTROLLED RECTIFIER
SF	SQUARE FEET
SP	STATIC PRESSURE
S	SUPPLY
T-STAT	THERMOSTAT
TSP	TOTAL STATIC PRESSURE
TENV	TOTALLY ENCLOSED NOT VENTILATED
UH	UNIT HEATER
V	VOLTS
VFD	VARIABLE FREQUENCY DRIVE
VTR	VENT THROUGH ROOF
W/	WITH
WB	WET BULB

MECHANICAL DRAWING INDEX

DWG NO	DWG TITLE	NAVFAC DWG NO	SHEET NO.
M-001	MECHANICAL LEGEND	16030473	219
M-111	LOX PLANT MECHANICAL FLOOR PLAN	16030474	220
M-121	SONOBUOY ISSUE/STORAGE FACILITY MECHANICAL FLOOR PLAN	16030475	221
M-146	AIRCRAFT RINSE FACILITY HVAC FLOOR PLAN	16030476	222
M-311	LOX PLANT MECHANICAL SECTION	16030477	223
M-321	SONOBUOY ISSUE/STORAGE FACILITY – BLDG. SECTION	16030478	224
M-501	MECHANICAL DETAILS	16030479	225
M-502	MECHANICAL DETAILS	16030480	226
M-601	SCHEDULES	16030481	227
M-602	SCHEDULES	16030482	228
M-603	PIPING DIAGRAM	16030483	229
M-811	LOX PLANT CONTROLS	16030484	230
M-812	LOX PLANT CONTROLS	16030485	231
M-821	SONOBOUY ISSUE/STORAGE FACILITY CONTROLS	16030486	232
M-822	SONOBOUY ISSUE/STORAGE FACILITY CONTROLS	16030487	233
M-841	AIRCRAFT RINSE FACILITY CONTROLS	16030488	234
MP411	LOX PLANT ENLARGED MECHANICAL ROOM PLAN	16030489	235
MP421	SONOBUOY ISSUE/STORAGE MECH RM ENLARGED PLANS & SECTIONS	16030490	236

L:\PROJECTS\214024 – NAVY – 11D008 – NASWI P252 HANGAR\SCHEDULES\[DRAWING INDEX P-259 PART A & B.XLSX]PLUMB PART B

			APPR
			DATE
			DESCRIPTION
			SYM

NAVFAC

LARRY D. SWARTZ — STATE OF WASHINGTON — 27501 — REGISTERED PROFESSIONAL ENGINEER
2-18-15 SEAL

notkin
mechanical engineers
www.notkin.com
telephone: 206.448.1911
facsimile: 206.448.9485
2301 5th Avenue, Suite 401
Seattle, WA 98121

Contact: Larry Swartz, P.E.
notkin#: 214024
A/E INFO

APPROVED
FOR COMMANDER NAVFAC 3/2/15

ACTIVITY
NAS WHIDBEY ISLAND

SATISFACTORY TO DATE
DES: BCD | DRW: JML | CHK: LDS
<<PM/DM>> JOSEPH KISIDAY
BRANCH MANAGER
CHIEF ENG/ARCH
<<XX>>

DEPARTMENT OF THE NAVY
NAVAL FACILITIES ENGINEERING COMMAND
NAVAL AIR STATION WHIDBEY ISLAND

NAVAL FACILITIES ENGINEERING COMMAND – NORTHWEST
AULT FIELD – OAK HARBOR, WA
NAVAL AIR STATION WHIDBEY ISLAND
OAK HARBOR, WA
FY-15 MCON PROJECT P-259 P-8A AIRCRAFT APRON EXPANSION - PART A
MECHANICAL LEGEND

SCALE: AS NOTED
EPROJECT NO.:
CONSTR. CONTR. NO.
N44255-15-C-6003
NAVFAC DRAWING NO.
16030473
SHEET 219 OF 302

M-001

DRAWFORM REVISION: 10 MARCH 2009

L:\PROJECTS\214024 - Navy - 11D008 - NASWI P252 Hangar\Drawings\Part A\M-001.dwg, 2/12/2015 6:20:59 PM, ir

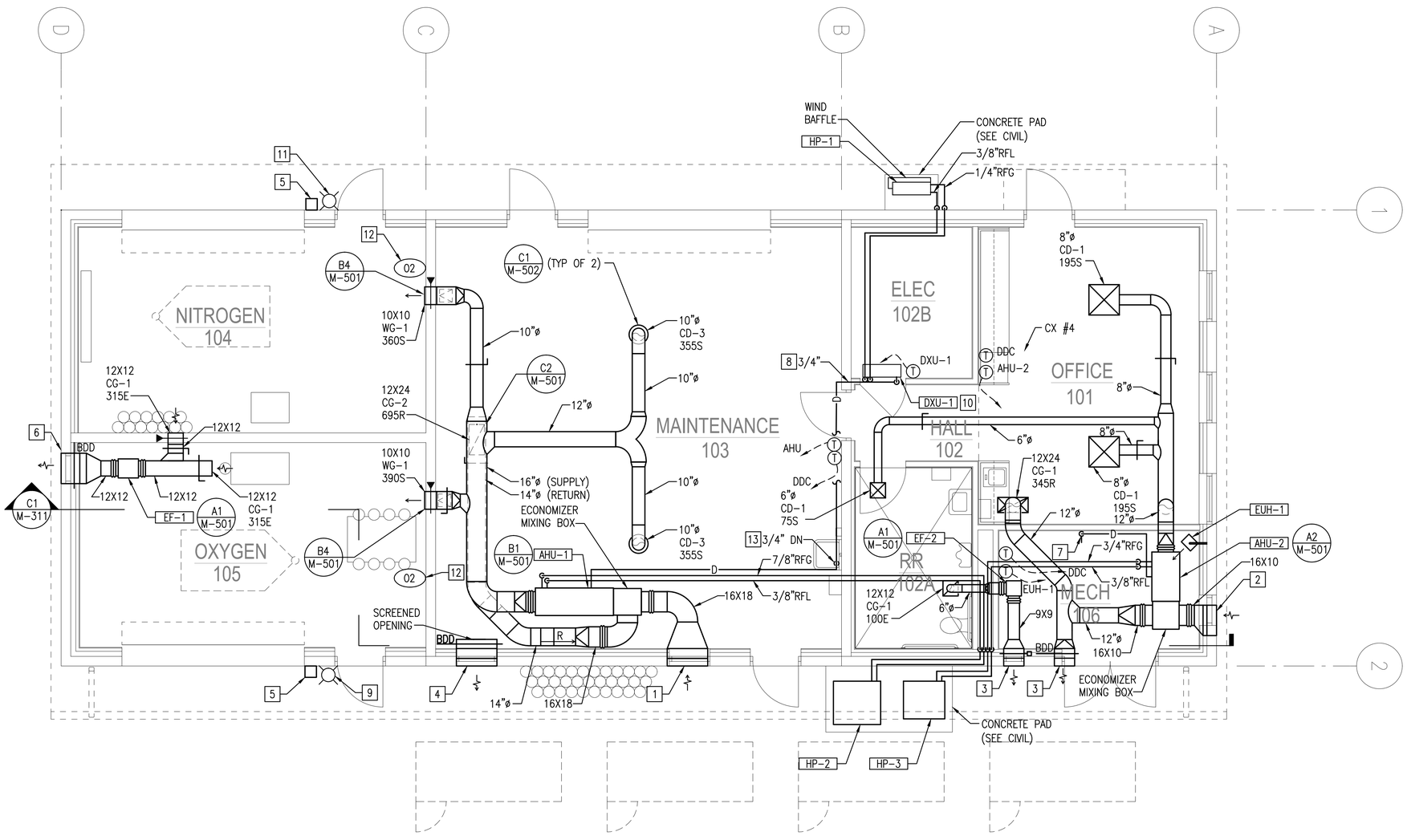

SHEET KEY NOTES:

1. 32X24 INTAKE LOUVER. SEE ARCHITECTURAL. (A-211)
2. 24X16 INTAKE LOUVER. SEE ARCHITECTURAL. (A-211)
3. 16X16 EXHAUST LOUVER. SEE ARCHITECTURAL. (A-211)
4. 32X16 EXHAUST LOUVER. SEE ARCHITECTURAL. (A-211)
5. VENTILATION EMERGENCY SHUT-OFF SWITCH.
6. 24X16 EXHAUST GRILL. SEE ARCHITECTURAL. (A-211)
7. ROUTE TO FLOOR DRAIN, SEE C3/MP411. MIN. 1/8" SLOPE PER FT.
8. MIN. 1/8" SLOPE PER FT.
9. WALL MOUNTED STROBE LIGHT. MOUNT AT 8'-0" AFF. LIGHT ASSOCIATED WITH OXYGEN SENSOR IN OXYGEN STORAGE ROOM [105]. LIGHT TO HAVE SIGN MOUNTED BELOW THAT READS: "HAZARDOUS ATMOSPHERE WHEN FLASHING".
10. MOUNT UNIT ABOVE DOORWAY.
11. WALL MOUNTED STROBE LIGHT. MOUNT AT 8'-0" AFF. LIGHT ASSOCIATED WITH OXYGEN SENSOR IN NITROGEN STORAGE ROOM [104]. LIGHT TO HAVE SIGN MOUNTED BELOW THAT READS: "HAZARDOUS ATMOSPHERE WHEN FLASHING".
12. O2 SENSOR WITH VISUAL ALARM LIGHT. MOUNT 4'-8" AFF.
13. ROUTE DRAIN TO SERVICE SINK. TERMINATE 1" ABOVE SINK RIM.

LOX PLANT MECHANICAL FLOOR PLAN

SCALE: 1/4"=1'-0"

A1

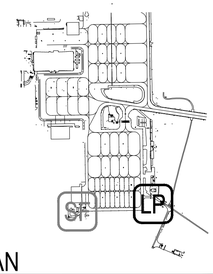

KEY PLAN

SCALE: NTS

LP = GENERAL VICINITY OF LOX PLANT
SF = GENERAL VICINITY OF SONOBUOY ISSUE/STORAGE FACILITY

1/4" = 1'-0"

0 2 4 8 12

NO.	DESCRIPTION	DATE	APPR

NAVFAC

LARRY D. SWARTZ — STATE OF WASHINGTON — 27501 — REGISTERED PROFESSIONAL ENGINEER
2-18-15
SEAL

notkin
mechanical engineers
www.notkin.com
telephone: 206.448.1911
facsimile: 206.448.9485
2301 5th Avenue, Suite 401
Seattle, WA 98121

Contact: Larry Swartz, P.E.
notkin#: 214024
A/E INFO

APPROVED
FOR COMMANDER NAVFAC 3/2/15
ACTIVITY
NAS WHIDBEY ISLAND
SATISFACTORY TO DATE
DES: BCD | DRW: JML | CHK: LDS
<<PM/DM>> JOSEPH KISIDAY
BRANCH MANAGER
CHIEF ENG/ARCH
<<XXX>>

DEPARTMENT OF THE NAVY
NAVAL FACILITIES ENGINEERING COMMAND
NAVAL AIR STATION WHIDBEY ISLAND

NAVAL FACILITIES ENGINEERING COMMAND ~ NORTHWEST
AULT FIELD - OAK HARBOR, WA

NAVAL AIR STATION WHIDBEY ISLAND
OAK HARBOR, WA

FY-15 MCON PROJECT P-259 P-8A AIRCRAFT
APRON EXPANSION - PART A

LOX PLANT MECHANICAL FLOOR PLAN

SCALE: AS NOTED
EPROJECT NO.:
CONSTR. CONTR. NO.
N44255-15-C-6003
NAVFAC DRAWING NO.
16030474
SHEET 220 OF 302

M-111

DRAWFORM REVISION: 10 MARCH 2009

L:\PROJECTS\321404 - Navy - 11DO08 - NASWI P252 Hangar\Drawings\Part A\M-111.dwg, 2/12/2016 6:21:19 PM, lr

SHEET KEY NOTES:

1. ALIGN UNIT DISCHARGE CENTER LINE WITH CENTER OF LOUVER, BOTTOM OF UNIT IS APPROXIMATELY 13'-6" AFF. SUPPORT UNIT FROM ROOF FRAMING. SEE MOUNTING DETAIL A1/M-501.
2. ALIGN UNIT DISCHARGE CENTER LINE WITH CENTER OF LOUVER, BOTTOM OF UNIT IS APPROXIMATELY 13'-9" AFF. SUPPORT UNIT FROM ROOF FRAMING. SEE MOUNTING DETAIL A1/M-501.
3. ALIGN UNIT DISCHARGE CENTER LINE WITH CENTER OF LOUVER, BOTTOM OF UNIT IS APPROXIMATELY 13'-8" AFF. SUPPORT UNIT FROM ROOF FRAMING. SEE MOUNTING DETAIL A1/M-501.
4. RUN DUCT ABOVE ROLL-UP DOOR, BOTTOM OF DUCT ABOUT 21' AFF. SUPPORT DUCT FROM STRUCTURE ABOVE.
5. RADIANT HEATER BURNERS 25' APART. SUPPORT RADIANT HEATING SYSTEM FROM ROOF FRAMING. SEE DETAIL B4/M-502. BOTTOM OF TUBE IS ABOUT 15'-6" AFF. SLOPE TUBE TOWARD RADIANT HEATER FLUE FAN PER MANUFACTURER'S RECOMMENDATIONS.
6. SUPPORT RADIANT HEATER FLUE FAN FROM ROOF FRAMING.
7. VFD FOR SF-2 MOUNTED ON WALL 72" AFF.
8. SUPPORT PIPING FROM ROOF FRAMING.
9. SUPPORT EQUIPMENT FROM ROOF FRAMING.
10. RADIANT HEATER TAILPIPE.
11. RADIANT HEATER WITH ONE SIDE REFLECTOR FACING NORTH.
12. RADIANT HEATER WITH ONE SIDE REFLECTOR FACING SOUTH.
13. DAMPER COUPLING AT TAILPIPE.
14. INSTALL DIFFUSERS PER DETAIL C1/M-501.
15. INSTALL DIFFUSERS PER DETAIL C1/M-502
16. INSTALL EXHAUST GRILLS PER DETAIL C2/M-501.
17. THERMOSTAT FOR IR CONTROL PANEL ZONE 1 SERVING SONOBUOY STORAGE 102.
18. THERMOSTAT FOR IR CONTROL PANEL ZONE 2 SERVING SONOBUOY ISSUE 103.

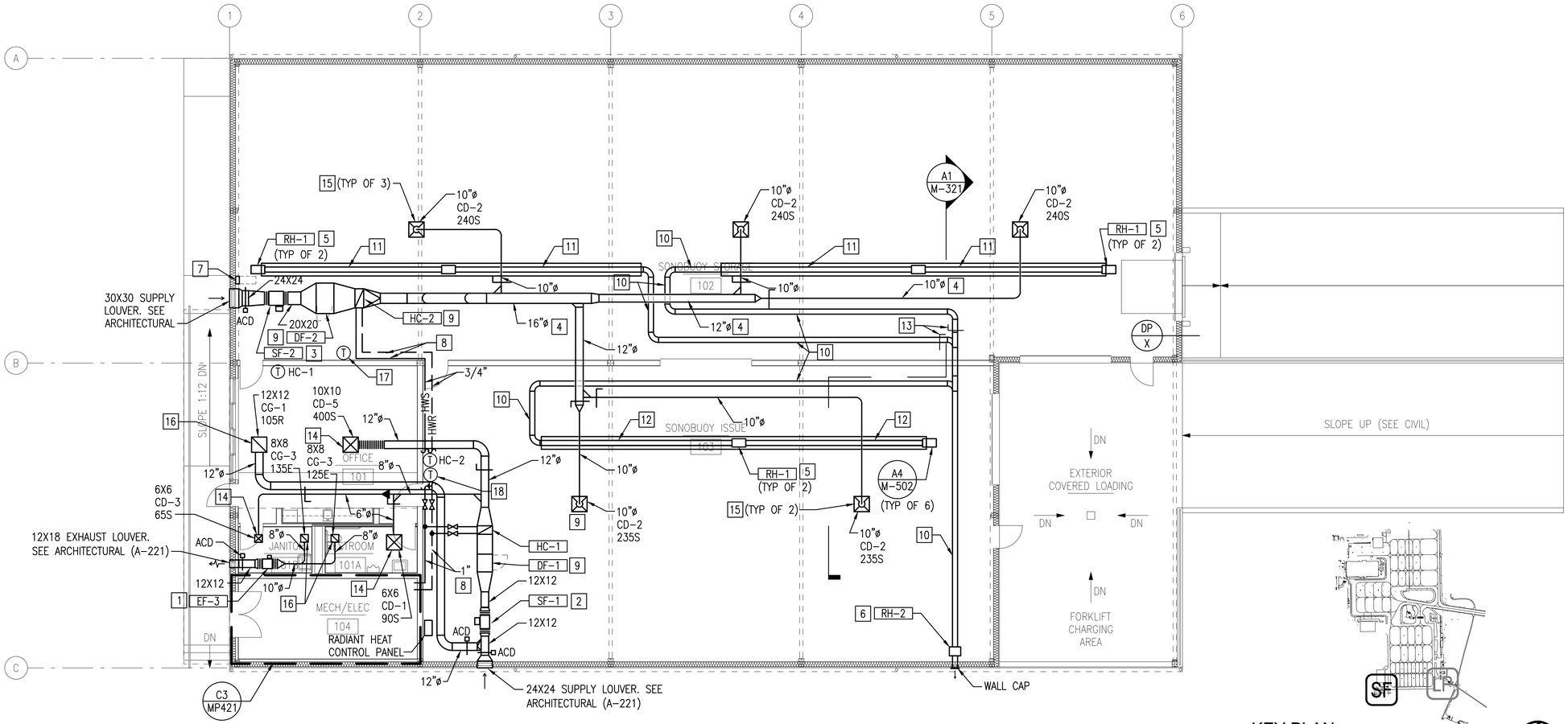

SONOBUOY ISSUE/STORAGE FACILITY MECHANICAL FLOOR PLAN

SCALE: 1/8"=1'-0"

KEY PLAN

SCALE: NTS

LP = GENERAL VICINITY OF LOX PLANT
SF = GENERAL VICINITY OF SONOBUOY ISSUE/STORAGE FACILITY

1/8" = 1'-0"

0 4 8 16 24

APPR	DATE	DESCRIPTION	SYM

NAVFAC

LARRY D. SWARTZ — STATE OF WASHINGTON — 27501 — REGISTERED PROFESSIONAL ENGINEER
2-18-15 SEAL

notkin
mechanical engineers
www.notkin.com
telephone: 206.448.1911
facsimile: 206.448.9485
2301 5th Avenue, Suite 401
Seattle, WA 98121

Contact: Larry Swartz, P.E.
notkin#: 214024
A/E INFO

APPROVED
FOR COMMANDER NAVFAC 3/2/15

ACTIVITY
NAS WHIDBEY ISLAND

SATISFACTORY TO DATE
DES: BCD DRW: JML CHK: LDS
<<PM/DM>> JOSEPH KISIDAY
BRANCH MANAGER
CHIEF ENG/ARCH
<<XXX>>

DEPARTMENT OF THE NAVY
NAVAL FACILITIES ENGINEERING COMMAND
NAVAL AIR STATION WHIDBEY ISLAND

NAVAL FACILITIES ENGINEERING COMMAND ~ NORTHWEST
AULT FIELD - OAK HARBOR, WA

NAVAL AIR STATION WHIDBEY ISLAND
OAK HARBOR, WA

FY-15 MCON PROJECT P-259 P-8A AIRCRAFT APRON EXPANSION - PART A

SONOBUOY ISSUE/STORAGE FACILITY MECHANICAL FLOOR PLAN

SCALE: AS NOTED
EPROJECT NO.:
CONSTR. CONTR. NO.
N44255-15-C-6003
NAVFAC DRAWING NO.
16030475
SHEET 221 OF 302

M-121

DRAWFORM REVISION: 10 MARCH 2009

L:\PROJECTS\214024 - Navy - 11DD08 - NASWI P232 Hangar\Drawings\Part A\M-121.dwg, 2/12/2015 6:21:20 PM, ir

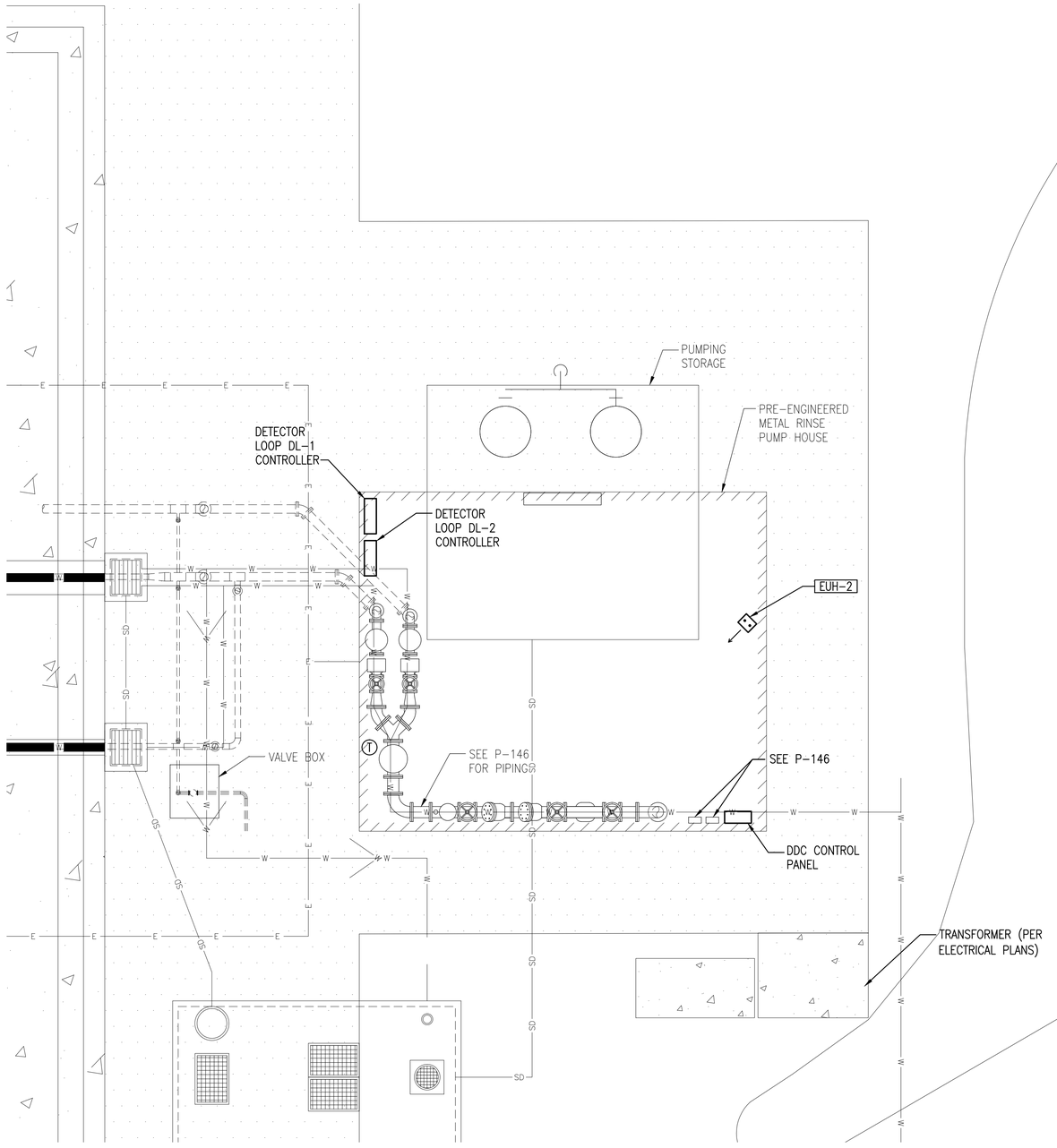

AIRCRAFT RINSE FACILITY HVAC PLAN

SCALE: 1/4"=1'-0"

A1

GENERAL NOTES:

1. SEE M-602 FOR EUH-2 SCHEDULE.

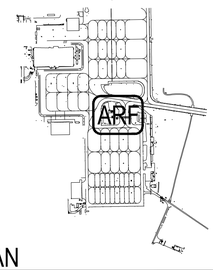

KEY PLAN

SCALE: NTS

ARF = AIRCRAFT RINSE FACILITY PLAN

1/4" = 1'-0"

0 2 4 8 12

SYM	DESCRIPTION	DATE	APPR

NAVFAC

LARRY D. SWARTZ — STATE OF WASHINGTON — 27501 — REGISTERED PROFESSIONAL ENGINEER

2-18-15 SEAL

notkin
mechanical engineers
www.notkin.com
telephone: 206.448.1911
facsimile: 206.448.9485
2301 5th Avenue, Suite 401
Seattle, WA 98121

Contact: Larry Swartz, P.E.
notkin#: 214024
A/E INFO

APPROVED
FOR COMMANDER NAVFAC 3/2/15

ACTIVITY
NAS WHIDBEY ISLAND

SATISFACTORY TO DATE

DES: BCD | DRW: JML | CHK: LDS

<<PM/DM>> JOSEPH KISIDAY

BRANCH MANAGER

CHIEF ENG/ARCH

<<XXX>>

DEPARTMENT OF THE NAVY
NAVAL FACILITIES ENGINEERING COMMAND
NAVAL AIR STATION WHIDBEY ISLAND

NAVAL FACILITIES ENGINEERING COMMAND ~ NORTHWEST
AULT FIELD - OAK HARBOR, WA

NAVAL AIR STATION WHIDBEY ISLAND
OAK HARBOR, WA

FY-15 MCON PROJECT P-259 P-8A AIRCRAFT APRON EXPANSION - PART A

AIRCRAFT RINSE FACILITY HVAC FLOOR PLAN

SCALE: AS NOTED

EPROJECT NO.:

CONSTR. CONTR. NO.
N44255-15-C-6003

NAVFAC DRAWING NO.
16030476

SHEET 222 OF 302

M-146

DRAWFORM REVISION: 10 MARCH 2009

L:\PROJECTS\214024 - Navy - 11D008 - NASWI P292 Hangar\Drawings\Part A\M-146.dwg, 2/12/2015 6:21:31 PM, lr

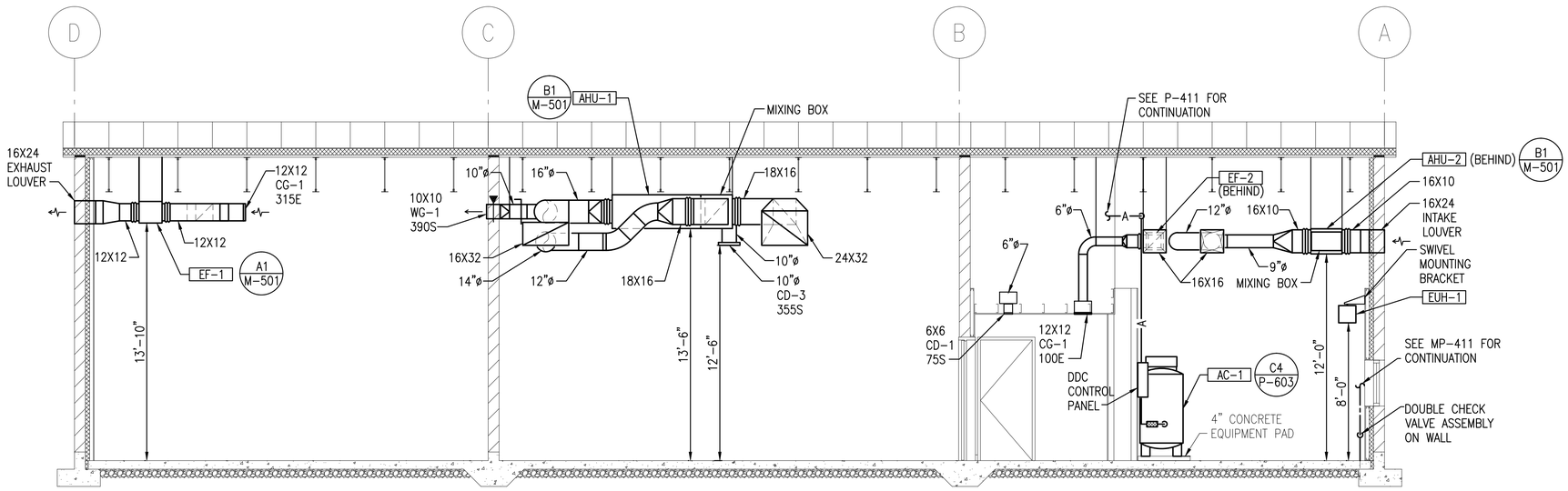

LOX PLANT MECHANICAL SECTION

SCALE: 1/4"=1'-0"

M-111 C1

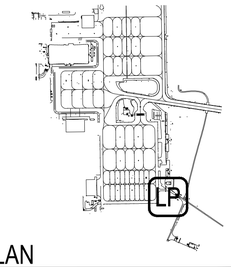

KEY PLAN

SCALE: NTS

LP = GENERAL VICINITY OF LOX PLANT
SF = GENERAL VICINITY OF SONOBUOY ISSUE/STORAGE FACILITY

1/4" = 1'-0"

0 2 4 8 12

APPR	DATE	DESCRIPTION	SYM

NAVFAC

LARRY D. SWARTZ
STATE OF WASHINGTON
27501
REGISTERED
PROFESSIONAL ENGINEER
2-18-15
SEAL

notkin
mechanical engineers
www.notkin.com
telephone: 206.448.1911
facsimile: 206.448.9485
2301 5th Avenue, Suite 401
Seattle, WA 98121

Contact: Larry Swartz, P.E.
notkin#: 214024
A/E INFO

APPROVED

FOR COMMANDER NAVFAC 3/2/15

ACTIVITY

NAS WHIDBEY ISLAND

SATISFACTORY TO DATE

DES: BCD	DRW: JML	CHK:	LDS

<<PM/DM>> JOSEPH KISIDAY

BRANCH MANAGER

CHIEF ENG/ARCH

<<XXX>>

DEPARTMENT OF THE NAVY
NAVAL FACILITIES ENGINEERING COMMAND
NAVAL AIR STATION WHIDBEY ISLAND

NAVAL FACILITIES ENGINEERING COMMAND ~ NORTHWEST
AULT FIELD ~ OAK HARBOR, WA

NAVAL AIR STATION WHIDBEY ISLAND
OAK HARBOR, WA

FY-15 MCON PROJECT P-259 P-8A AIRCRAFT APRON EXPANSION - PART A

LOX PLANT MECHANICAL SECTION

SCALE: AS NOTED

EPROJECT NO.:

CONSTR. CONTR. NO.
N44255-15-C-6003

NAVFAC DRAWING NO.
16030477

SHEET 223 OF 302

M-311

DRAWFORM REVISION: 10 MARCH 2009

L:\PROJECTS\214024 - Navy - 11DO08 - NAS\W P252 Hangar\Drawings\Part A\M-311.dwg, 2/12/2015 6:21:42 PM, lr

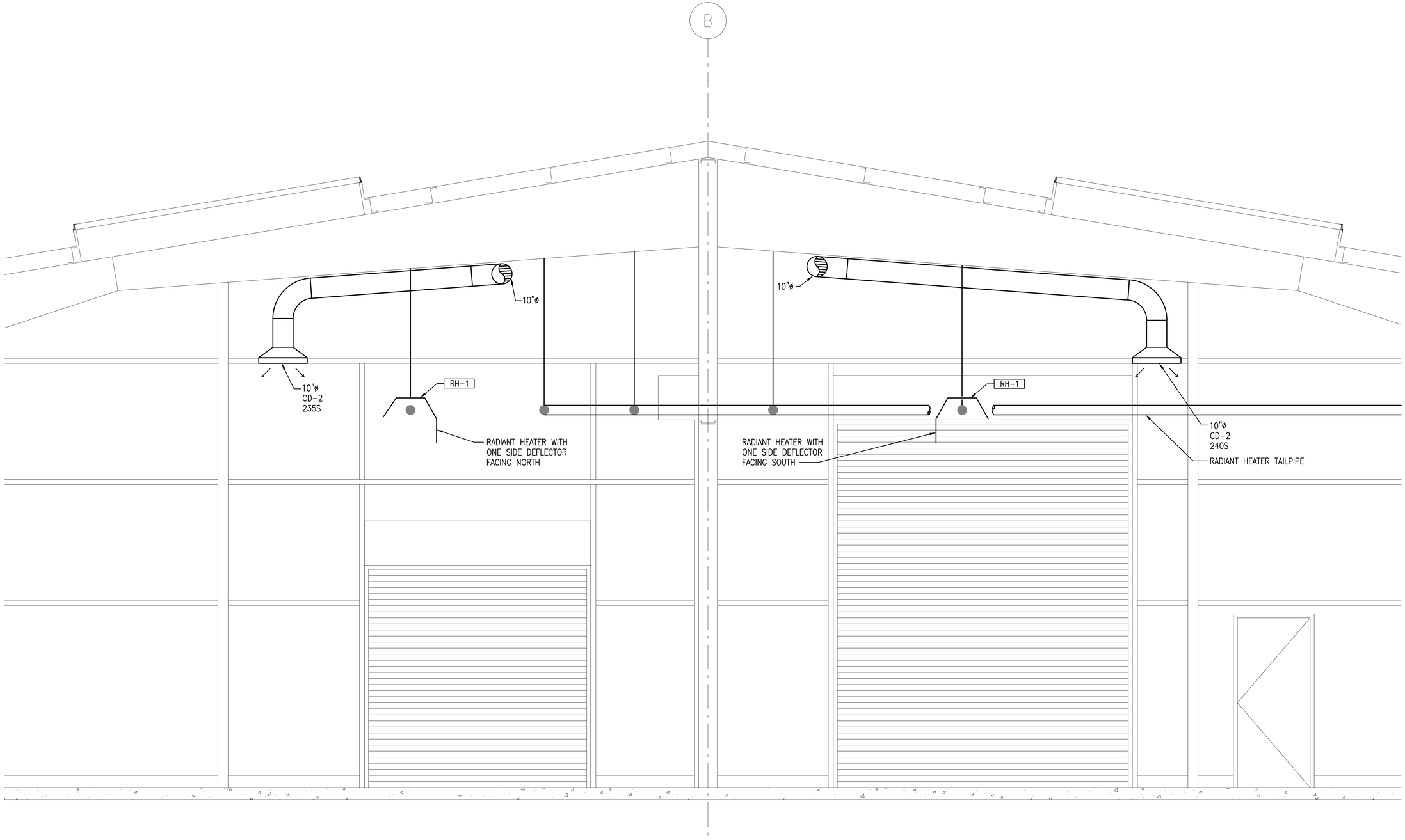

SONOBUOY ISSUE/STORAGE FACILITY-BLDG. SECTION

SCALE: 1/2"=1'-0"

M-121 (A1)

1/2" = 1'-0"

0 2 4 6

APPR	DATE	DESCRIPTION	SYM

NAVFAC

LARRY D. SWARTZ — STATE OF WASHINGTON — 27501 — REGISTERED PROFESSIONAL ENGINEER

2-18-15 SEAL

notkin
mechanical engineers
www.notkin.com
telephone: 206.448.1911
facsimile: 206.448.9485
2301 5th Avenue, Suite 401
Seattle, WA 98121

Contact: Larry Swartz, P.E.
notkin#: 214024
A/E INFO

APPROVED

FOR COMMANDER NAVFAC 3/2/15

ACTIVITY
NAS WHIDBEY ISLAND

SATISFACTORY TO DATE

DES: BCD | DRW: JML | CHK: LDS

<<PM/DM>> JOSEPH KISIDAY

BRANCH MANAGER

CHIEF ENG/ARCH

<<XXX>>

DEPARTMENT OF THE NAVY
NAVAL FACILITIES ENGINEERING COMMAND
NAVAL AIR STATION WHIDBEY ISLAND

NAVAL FACILITIES ENGINEERING COMMAND – NORTHWEST
AULT FIELD – OAK HARBOR, WA

NAVAL AIR STATION WHIDBEY ISLAND
OAK HARBOR, WA

FY-15 MCON PROJECT P-259 P-8A AIRCRAFT APRON EXPANSION - PART A

SONOBUOY ISSUE/STORAGE FACILITY-BLDG. SECTION

SCALE: AS NOTED

EPROJECT NO.:

CONSTR. CONTR. NO.
N44255-15-C-6003

NAVFAC DRAWING NO.
16030478

SHEET 224 OF 302

M-321

DRAWFORM REVISION: 10 MARCH 2009

L:\PROJECTS\214024 - Navy - 11DO08 - NASWI P2S2 Hangar\Drawings\Part A\M-321.dwg, 2/12/2015 6:21:46 PM, lr

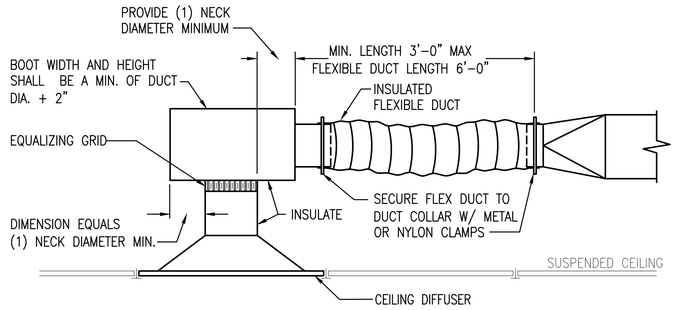

CEILING DIFFUSER DETAIL C1

SCALE: NONE M-121 15810-1

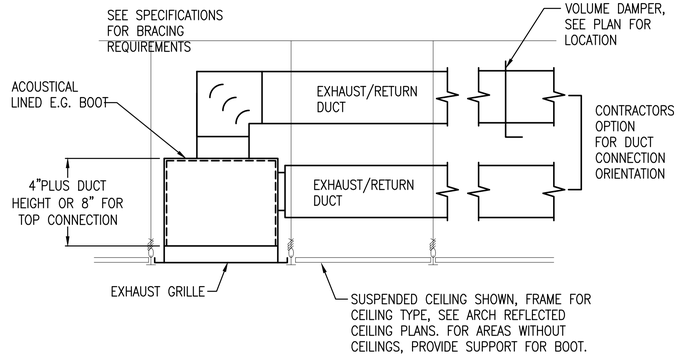

EXHAUST GRILLE DETAIL C2

SCALE: NONE M-121 15810-3R

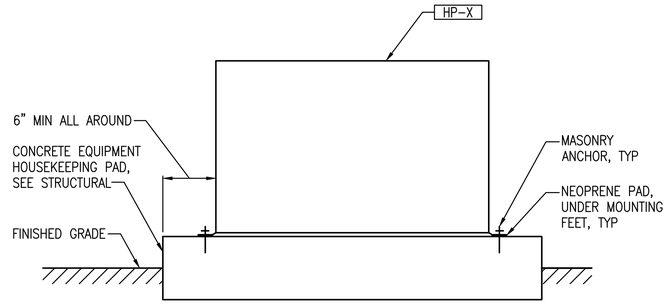

CONDENSING UNIT DETAIL C4

SCALE: NONE M-111

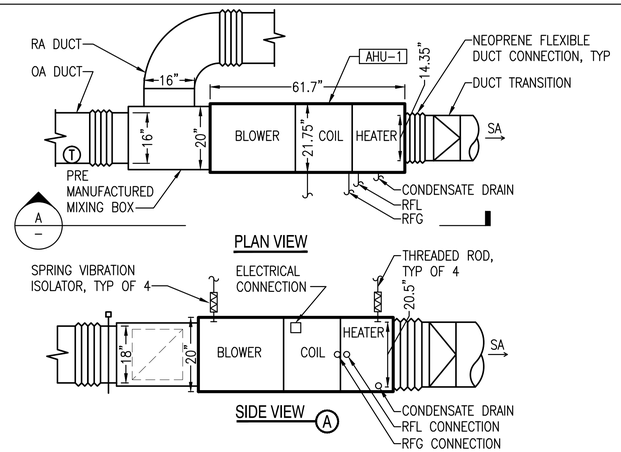

AIR HANDLING UNIT AHU-1 DETAIL B1

SCALE: NONE M-111

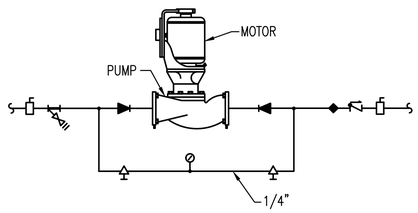

INLINE CENTRIFUGAL PUMP DETAIL B2

SCALE: NONE M-603 15100-6

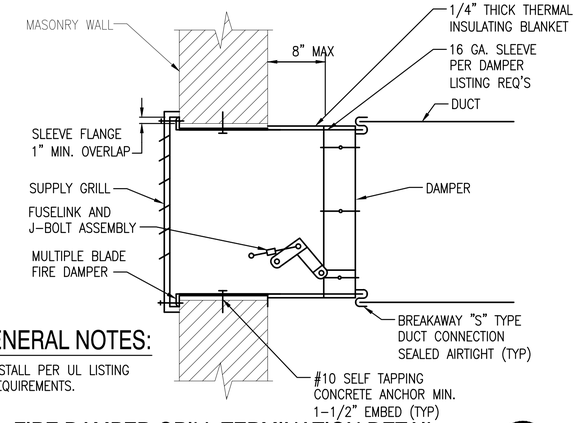

GENERAL NOTES:

1. INSTALL PER UL LISTING REQUIREMENTS.

FIRE DAMPER-GRILL TERMINATION DETAIL B4

SCALE: NONE M-111

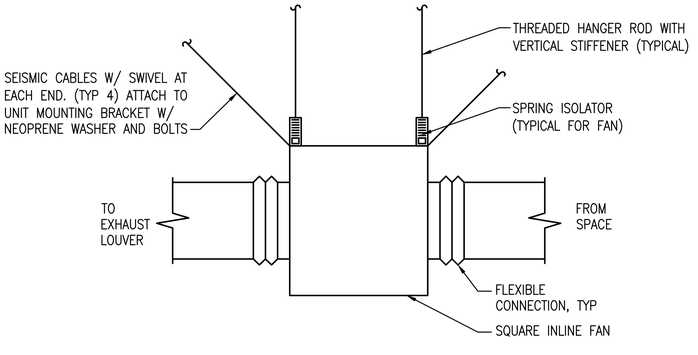

FAN DETAIL A1

SCALE: NONE M-111

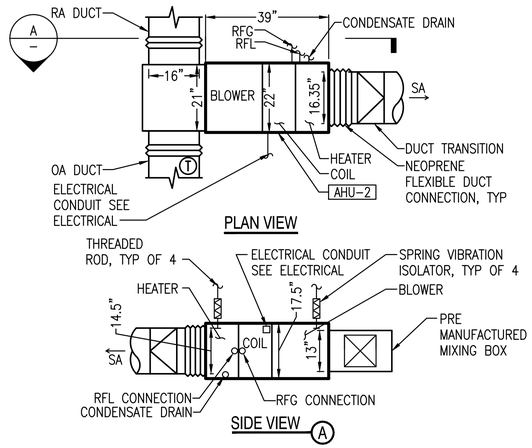

AIR HANDLING UNIT AHU-2 DETAIL A2

SCALE: NONE M-111

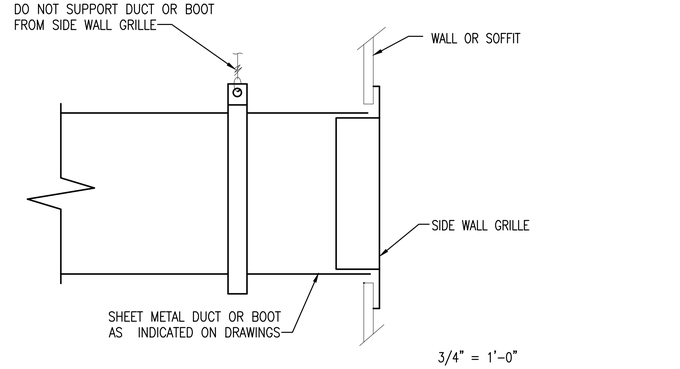

SIDE WALL GRILLE DETAIL A4

SCALE: NONE 15810-4

3/4" = 1'-0"

0 1 2 4

APPR | DATE | DESCRIPTION | SYM

NAVFAC

LARRY D. SWARTZ — STATE OF WASHINGTON — 27501 — REGISTERED PROFESSIONAL ENGINEER
2-18-15
SEAL

notkin
mechanical engineers
www.notkin.com
telephone: 206.448.1911
facsimile: 206.448.9485
2301 5th Avenue, Suite 401
Seattle, WA 98121

Contact: Larry Swartz, P.E.
notkin#: 214024
A/E INFO

APPROVED
FOR COMMANDER NAVFAC 3/2/15

ACTIVITY
NAS WHIDBEY ISLAND

SATISFACTORY TO DATE

DES: BCD	DRW: JML	CHK: LDS
<<PM/DM>>	JOSEPH KISIDAY	
BRANCH MANAGER		
CHIEF ENG/ARCH		
<<XXX>>		

DEPARTMENT OF THE NAVY
NAVAL FACILITIES ENGINEERING COMMAND ~ NORTHWEST
NAVAL AIR STATION WHIDBEY ISLAND — AULT FIELD - OAK HARBOR, WA

NAVAL AIR STATION WHIDBEY ISLAND — OAK HARBOR, WA

FY-15 MCON PROJECT P-259 P-8A AIRCRAFT APRON EXPANSION - PART A

MECHANICAL DETAILS

SCALE: AS NOTED
EPROJECT NO.:
CONSTR. CONTR. NO.
N44255-15-C-6003
NAVFAC DRAWING NO.
16030479
SHEET 225 OF 302

M-501

DRAWFORM REVISION: 10 MARCH 2009

L:\PROJECTS\214024 - Navy - 11D008 - NASW P252 Hangar\Drawings\Part A\M-501.dwg, 2/12/2015 6:21:48 PM, ir

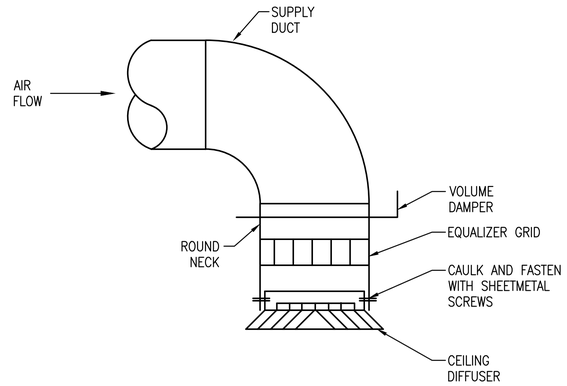

DIFFUSER INSTALLATION DETAIL C1

SCALE: NONE — M-111, M-121 — 15810-19R

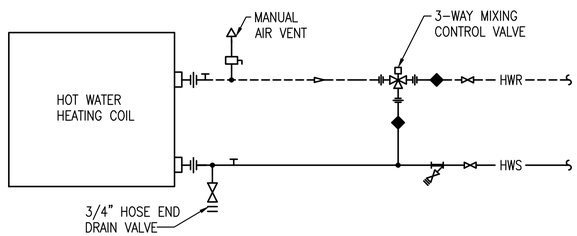

HEATING COIL DETAIL C2

SCALE: NONE — M-603 — 15700-9

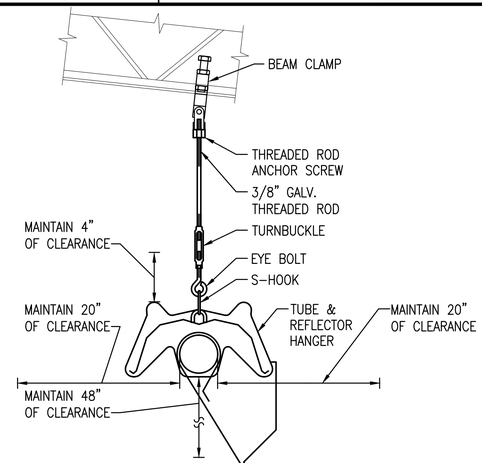

INFRA-RED HEATER SUPPORT DETAIL C4

SCALE: NONE — M-502

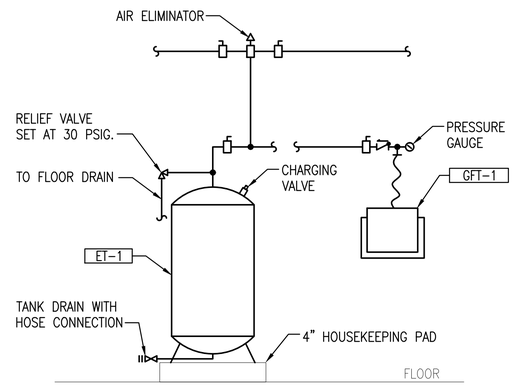

COMPRESSION AND GLYCOL FEED SYSTEM TANK DETAIL B2

SCALE: NONE — M-603, MP421

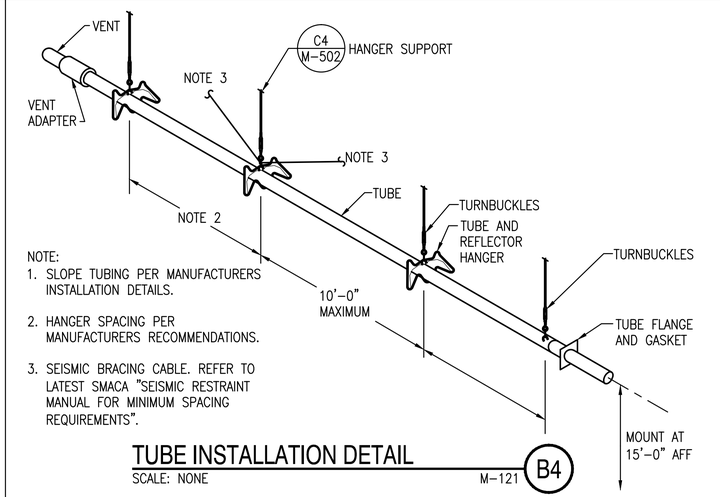

NOTE:
1. SLOPE TUBING PER MANUFACTURERS INSTALLATION DETAILS.
2. HANGER SPACING PER MANUFACTURERS RECOMMENDATIONS.
3. SEISMIC BRACING CABLE. REFER TO LATEST SMACA "SEISMIC RESTRAINT MANUAL FOR MINIMUM SPACING REQUIREMENTS".

TUBE INSTALLATION DETAIL B4

SCALE: NONE — M-121

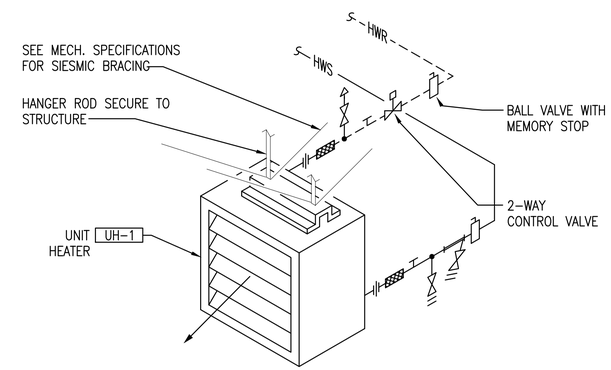

UNIT HEATER DETAIL A2

SCALE: NONE — M-603 — 15810-37

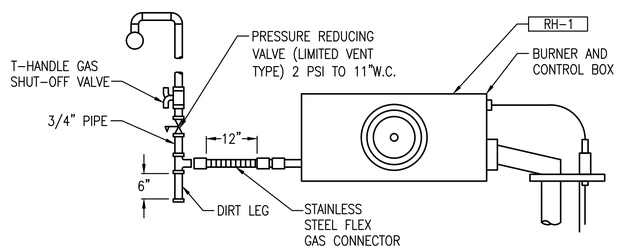

GAS CONNECTION DETAIL A4

SCALE: NONE — M-121, P-121

APPR	DATE	DESCRIPTION	SYM

NAVFAC

LARRY D. SWARTZ — STATE OF WASHINGTON — 27501 — REGISTERED PROFESSIONAL ENGINEER
2-18-15 SEAL

notkin
mechanical engineers
www.notkin.com
telephone: 206.448.1911
facsimile: 206.448.9485
2301 5th Avenue, Suite 401
Seattle, WA 98121

Contact: Larry Swartz, P.E.
notkin#: 214024
A/E INFO

APPROVED
FOR COMMANDER NAVFAC 3/2/15

ACTIVITY
NAS WHIDBEY ISLAND

SATISFACTORY TO DATE
DES: BCD | DRW: JML | CHK: LDS
<<PM/DM>> JOSEPH KISIDAY
BRANCH MANAGER
CHIEF ENG./ARCH
<<XXX>>

DEPARTMENT OF THE NAVY
NAVAL FACILITIES ENGINEERING COMMAND
NAVAL AIR STATION WHIDBEY ISLAND

NAVAL FACILITIES ENGINEERING COMMAND ~ NORTHWEST
AULT FIELD - OAK HARBOR, WA

NAVAL AIR STATION WHIDBEY ISLAND
OAK HARBOR, WA

FY-15 MCON PROJECT P-259 P-8A AIRCRAFT APRON EXPANSION - PART A

MECHANICAL DETAILS

SCALE: AS NOTED
EPROJECT NO.:
CONSTR. CONTR. NO.
N44255-15-C-6003
NAVFAC DRAWING NO.
16030480
SHEET 226 OF 302

M-502

DRAWFORM REVISION: 10 MARCH 2009

L:\PROJECTS\214024 - Navy - 11D008 - NASWI P232 Hangar\Drawings\Part A\M-502.dwg, 2/12/2015 6:21:51 PM, ir

GRILLE, REGISTER & DIFFUSER (GRD) SCHEDULE

ITEM	MODULE SIZE	FACE NOMINAL	NECK SIZE [4] IN.	CONNECTED DUCT SIZE [4] IN.	MAX AIRFLOW CFM	NC [6]	DTP IN. W.G.	THROW FT.	DESCRIPTION [1]
CD-1	24X24	24X24	6X6	6	100	–	0.02	5, 9	MODULAR CORE, STEEL, WHITE FINISH, 4-WAY THROW, ADJUSTABLE PATTERN AFTER IT HAS BEEN INSTALLED, WITH FRAME FOR T-BAR OR GYPSUM BOARD AS REQUIRED FOR CEILING TYPE
	24X24	24X24	8X8	8	175	–	0.03	6, 12	
	24X24	24X24	10X10	10	275	–	0.03	8, 15	
	24X24	24X24	12X12	12	400	14	0.04	10, 18	
	24X24	24X24	14X14	14	540	17	0.04	15, 21	
CD-2	24x24	24x24	6Ø	6Ø	135	12	0.05	3,6	SQUARE THREE (3) CONE, STEEL, WHITE FINISH, WITH PANEL MOUNT OR FULL FACE FOR T-BAR OR GYPSUM BOARD AS REQUIRED FOR CEILING TYPE
	24x24	24x24	8Ø	8Ø	210	11	0.04	4,8	
	24x24	24x24	10Ø	10Ø	380	18	0.06	6,13	
	24x24	24x24	12Ø	12Ø	550	21	0.06	8,16	
	24x24	24x24	14Ø	14Ø	750	22	0.06	10,19	
CD-3	–	–	10Ø	10Ø	380	27	0.064	7 H / 9 V	ROUND, ADJUSTABLE HEAVY DUTY STEEL, VERTICAL TO HORIZONTAL DISCHARGE, CLEAR ANODIZE FINISH, EQUALIZING GRID. [5]
	–	–	12Ø	12Ø	550	28	0.063	8H / 9 V	
WG-1	–	10X10	10X10	10X10	420	21	0.07	13, 19	LOUVERED SUPPLY GRILLE, STEEL, WHITE POWDER FINISH, 3/4 BLADE SPACING, SINGLE DEFLECTION FULLY ADJUSTABLE DEFLECTION BLADE SET AT 45 DEG, BLADES PARALLEL TO LONG DIM. SURFACE MOUNT
CG-1	–	8X8	8X8		185	–	0.03	–	EGGCRATE GRILLE, ALUMINUM 1/2 X 1/2 X 1/2 GRID, ALUMINUM BORDER FOR T-BAR OR GYPSUM CEILING AS REQUIRED FOR CEILING TYPE, WHITE POWDER FINISH
	–	10X10	10X10		295	–	0.03	–	
	–	12X12	12X12		440	–	0.03	–	
	–	14X14	14X14		610	–	0.03	–	
	–	24X12	24X12		910	–	0.03	–	
	–	24X24	24X24		1875	–	0.03	–	
CG-2	–	–	30X12	14Ø	832	–	0.263	–	SPIRAL DUCT GRILLE, ALUMINUM, 3/16IN PERFORATED HOLE, FOAM GASKET, COUNTERSUNK SCREW HOLES, CLEAR ANODIZED FINISH
CG-3	–	8X8	8X8	8Ø	259	20	–	–	EGGCRATE GRILLE, ALUMINUM 1/2X1/2X1/2 GRID ALUMINUM BORDER FOR GYPSUM CEILING, ADJUSTABLE OPPOSED BLADE DAMPER , WHITE POWDER FINISH

NOTES:
[1] COORDINATE LOCATIONS WITH ARCHITECTURAL CEILING PLAN FOR LOCATIONS AND CEILING TYPE.
[2] THROW VALUES ARE BASED ON ISOTHERMAL AIR AND VELOCITIES OF 50 AND 150 FPM.
[3] NC VALUES ARE BASED ON ROOM ATTENUATION OF 10dB RE:10 EXP -12 WATTS.
[4] UNLESS INDICATED OTHERWISE ON DRAWINGS.
[5] THROW VALUES BASED ON VELOCITIES OF 50 FPM AND VERTICAL THROW FEET AT 40F DELTA-T
[6] BLANKS (-) INDICATE A NC LEVEL BELOW 15

L:\PROJECTS\214024 - Navy - 11D008 - NASWI P252 Hangar\Schedules\Schedules Part A\HVAC\[GRD Schedule.xls]259 PART A DIFFUSERS

FILTER SCHEDULE

MARK	UNIT SERVES	LOCATION	AIR FLOW (CFM)	AIR PD (IN WG) INITIAL	AIR PD (IN WG) FINAL	FILTER TYPE	QUANTITY	SIZE HxWxD (IN)	TOTAL AREA (SF)	MAX FACE VELOCITY (FPM)	HOUSING ACCESS	HOUSING SIZE HxW (IN)	HOUSING ARRANGEMENT HxW	NOTES
DF-1	SF-1	SONOBOUY ISSUE ROOM 103	555	0.06	0.25	MERV 7	1	24x24x2	4	138.8	SIDE	24x24	1H x 1W	
DF-2	SF-2	SONOBOUY STORAGE ROOM 102	1190	0.07	0.25	MERV 7	2	24x24x2	8	148.8	SIDE	24x48	1H x 2W	

NOTES:
[1] PROVIDE FILTER ENCLOSURE WITH SLIDE OUT ACCESS FOR FILTER REPLACEMENT

L:\PROJECTS\214024 - NAVY - 11D008 - NASWI P252 HANGAR\SCHEDULES\SCHEDULES PART A\HVAC\[FILTER SCHEDULE A.XLS]FILTER SCHEDULE

SPLIT SYSTEM CONDENSING UNIT (CU) SCHEDULE

MARK	UNIT SERVES	LOCATION	REFRIG TYPE	EFFICIENCY (SEER/EER/COP)	REF. CONN. SIZES LOW PRESS SIZE (IN)	REF. CONN. SIZES HIGH PRESS SIZE (IN)	ELECTRICAL VOLTAGE / PHASE	ELECTRICAL MCA (AMPS)	ELECTRICAL MOP (AMPS)	NOTES	EQUIP WEIGHT (LBS)
HP-1	DXU-1 [2]	LOX FACILITY	R-410A	26	3/8	1/4	208 / 1	12.0	15	[1],[5],[6]	78
HP-2	AHU-1	LOX FACILITY	R-410A	13/10.5/3.4	3/8	7/8	208 / 1	34.0	60	[3],[4]	250
HP-3	AHU-2	LOX FACILITY	R-410A	14/11/3.5	3/8	5/8	208 / 1	12.0	20	[3],[4]	200

NOTES:
[1] ADDITIONAL REFRIGERANT FIELD CHARGE MAY BE NECESSARY - CONSULT WITH MANUFACTURER UPON FINAL AS-BUILT PIPING LAYOUT
[2] SPLIT SYSTEM OUTDOOR UNIT SERVES INDOOR UNIT
[3] PROVIDE ANTI-SHORT CYCLE TIMER
[4] PROVIDE SEACOAST KIT
[5] PROVIDES POWER TO INDOOR UNIT (DXU-1)
[6] PROVIDE LOW AMBIENT COOLING WITH REQUIRED ACCESSORIES

SPLIT SYSTEM INDOOR UNIT

MARK	ZONE AREA SF	AREA SERVED	LOCATION	AIR FLOW (CFM)	FAN EXT. TP (IN WG)	COOLING CAPACITY (MBH)	HEAT CAPACITY (MBH)	AUX HEAT CAP (KW)	OA MIN (CFM)	ELECTRICAL VOLT/PH	ELECTRICAL MCA (AMPS)	ELECTRICAL MOP (AMPS)	NOTES	EQUIP WEIGHT (LBS)
DXU-1	81	ELECTRICAL ROOM 102B	LOX FACILITY	381	–	4.1	3.5	–	–	24VDC	1.0		[1],[3]	27
AHU-1	1,375	OXYGEN STORAGE NITROGEN STORAGE, MAINTENANCE	LOX FACILITY	1460	0.45	–	57	18.0	765	208/1	118.0	130.0	[2],[3]	170
AHU-2	404	OFFICE	LOX FACILITY	455	0.25	–	13.3	5.8	160	208/1	37.0	40.0	[2],[3]	110

NOTES:
[1] POWERED FROM OUTDOOR UNIT (HP-1)
[2] PRE-MANUFACTURED MIXING BOX WITH ECONOMIZER CONTROLS
[3] PROVIDE WITH MANUFACTURER'S CONTROLS AND SPACE THERMOSTAT. PROGRAMMABLE THERMOSTAT TO HAVE OCCUPIED AND UNOCCUPIED SETPOINTS.

L:\PROJECTS\214024 - NAVY - 11D008 - NASWI P252 HANGAR\SCHEDULES\SCHEDULES PART A\HVAC\[SPLIT SYSTEM SCHEDULE A.XLS]SPLIT SYSTEM CONDENSING UNIT

FAN SCHEDULE

MARK	UNIT SERVES	LOCATION	TYPE	CFM	MIN OA CFM	ESP (IN WG)	FAN RPM	BHP	MOTOR HP	MOTOR VOLT	MOTOR PH	MOTOR RPM	MOTOR ENCLOSURE TYPE	DRIVE TYPE	NOTES	EQUIP WEIGHT (LBS)
EF-1	OXYGEN STORAGE, NITROGEN STORAGE	LOX/OXYGEN STORAGE	INLINE CENTRIFUGAL	630	–	0.15	1297	0.06	1/6	115	1	1725	TENV	DIRECT	[5],[6],[11]	60
EF-2	RESTROOM	LOX/ 102A	INLINE CENTRIFUGAL	100	–	0.05	1064	0.01	1/6	115	1	1725	TENV	DIRECT	[5],[6],[8],[11]	45
EF-3	RESTROOM, JANITORS CLOSET	SONOBOUY ISSUE / STORAGE	INLINE CENTRIFUGAL	235	–	0.30	1050	0.02	1/4	115	1	1050	TENV	DIRECT	[5],[6],[11]	26
SF-1	RESTROOM, JANITORS CLOSET, OFFICE	SONOBOUY ISSUE / STORAGE	INLINE CENTRIFUGAL	555	450	0.78	1405	0.22	1/4	115	1	1648	TENV	DIRECT	[5],[6],[9],[11]	51
SF-2	STORAGE, ISSUE	SONOBOUY ISSUE / STORAGE	INLINE CENTRIFUGAL	1,190	1,190	0.50	1076	0.23	1/4	115	1	1693	TENV	DIRECT	[5],[6],[10]	56
RH-2	STORAGE, ISSUE	SONOBOUY ISSUE / STORAGE	RADIANT HEATER FAN	112	–	–	3450	–	3/4	115	1	–	TEFC	DIRECT	[1],[2],[3],[4],[7]	112

NOTES:
[1] RADIANT HEATER FLUE FAN MEASURED IN FLOW UNITS NOT CFM
[2] PROVIDE CONDENSING SYSTEM
[3] PROVIDE MODULATING SYSTEM CONTROL PANEL
[4] PROVIDE TRANSFORMER RELAYS TO CONTROL PUMPS
[5] PROVIDE NEMA 1 DISCONNECT
[6] PROVIDE SPRING HANGER VIBRATION ISOLATORS
[7] PROVIDED BY SAME MANUFACTURER AS RH-1
[8] RIGHT SIDE DISCHARGE
[9] PROVIDE WITH CONSTANT PRESSURE CONTROL
[10] ELECTRONICALLY COMMUTATED MOTOR (ECM) CONNECTED TO DDC TO CONTROL BUILDING PRESSURE
[11] ELECTRONICALLY COMMUTATED MOTOR (ECM)

L:\PROJECTS\214024 - NAVY - 11D008 - NASWI P252 HANGAR\SCHEDULES\SCHEDULES PART A\HVAC\[FAN SCHEDULE A.XLS]FAN SCHEDULE

INFRARED RADIANT HEATER SCHEDULE

MARK	LOCATION & UNIT SERVES	TYPE	STYLE	FUEL	INPUT (MBH)	INLET PRESSURE (IN WC)	NOTES
RH-1	SONOBUOY ISSUE/STORAGE	TUBE - LOW INTENSITY	DRAFT INDUCED	NG	60	4.5-14	[1],[2],[3],[4],[5]

NOTES:
[1] BASED ON NATURAL GAS
[2] PROVIDE WITH LIMITED VENT REGULATOR, GAS CONNECTOR, SHUT-OFF VALVE, AND DRIP LEG
[3] PROVIDE WITH TUBING, REFLECTOR, VACUUM PUMP PACKAGE, VFD, MODULATING CENTRAL CONTROLLER TO INTERFACE WITH DDC SYSTEM
[4] PROVIDE WITH CABLE, INDOOR SENSOR, SUPPORT PACKAGE & HANGERS SEE A4/M-502
[5] PROVIDE WITH REFLECTOR SIDE EXTENSION FOR ONE SIDE REFLECTOR PER M-121

L:\PROJECTS\214024 - NAVY - 11D008 - NASWI P252 HANGAR\SCHEDULES\SCHEDULES PART A\HVAC\[IFR SCHEDULE A.XLS]SCHEDULE IFR

APPR | DATE | DESCRIPTION | SYM

NAVFAC

LARRY D. SWARTZ — STATE OF WASHINGTON — 27501 — REGISTERED PROFESSIONAL ENGINEER
2-18-15 SEAL

notkin
mechanical engineers
www.notkin.com
telephone: 206.448.1911
facsimile: 206.448.9485
2301 5th Avenue, Suite 401
Seattle, WA 98121

Contact: Larry Swartz, P.E.
notkin#: 214024
A/E INFO

APPROVED
FOR COMMANDER NAVFAC 3/2/15
ACTIVITY
NAS WHIDBEY ISLAND
SATISFACTORY TO DATE
DES: BCD | DRW: JML | CHK: LDS
<<PM/DM>> JOSEPH KISIDAY
BRANCH MANAGER
CHIEF ENG/ARCH
<<XX>>

DEPARTMENT OF THE NAVY
NAVAL FACILITIES ENGINEERING COMMAND NORTHWEST
NAVAL AIR STATION WHIDBEY ISLAND
NAVAL FACILITIES ENGINEERING COMMAND ~ NORTHWEST
AULT FIELD - OAK HARBOR, WA
OAK HARBOR, WA
FY-15 MCON PROJECT P-259 P-8A AIRCRAFT APRON EXPANSION - PART A
SCHEDULES

SCALE: AS NOTED
EPROJECT NO.:
CONSTR. CONTR. NO.: N44255-15-C-6003
NAVFAC DRAWING NO.: 16030481
SHEET 227 OF 302
M-601
DRAWFORM REVISION: 10 MARCH 2009

L:\PROJECTS\214024 - Navy - 11D008 - NASWI P252 Hangar\Drawings\Part A\M-601.dwg, 2/13/2015 12:55:56 PM, pro

UNIT HEATERS- HOT WATER

MARK	AREA SERVED	LOCATION	PERFORMANCE				FLUID CONDITIONS					ELECTRICAL		INSTALLATION				NOTES
			CAPACITY BTUH [1]	CFM	ENTERING AIR TEMP DEG F	HEAT THROW FEET	FLUID [2]	GPM	ENTERING WATER TEMP DEG F	WATER PRESS. DROP FEET-W.G.	PIPE CONN. SIZE INCHES	MOTOR HP	VOLTS/ PHASE	HEIGHT ABOVE FLOOR FT-IN	OPERATING WEIGHT LBS	CONTROL VALVE CV	BALANCING VALVE SIZE (IN)	
UH-1	MECHANICAL/ ELECTRICAL ROOM	MECHANICAL/ ELECTRICAL ROOM	5.8	245	40	20	GLYCOL	0.7	140	0.8	3/8	16W	115 / 1	8	22	1.18	1/2	ALL

NOTES:

[1] OUTPUT BASED ON SCHEDULED ENTERING WATER AND AIR TEMPERATURES

[2] 30% PROPYLENE GLYCOL / 70% WATER SOLUTION

[3] PROVIDE FAN GUARD

[4] 2-WAY CONTROL VALVE

[5] CONTROL VALVE FOR UH-1: CV-SB-1

L:\PROJECTS\214024 - NAVY - 11D008 - NASWI P252 HANGAR\SCHEDULES\SCHEDULES PART A\HVAC\[UH SCHEDULE A.XLS]UNIT HEATER SCHEDULE

EXPANSION TANK SCHEDULE

MARK	SYSTEM	LOCATION	APPROX SYSTEM VOLUME (GAL)	TEMPERATURE RANGE MIN (°F)	TEMPERATURE RANGE MAX (°F)	FILL [1] PRESS AT TANK (PSIG)	MAX SYSTEM OPER PRESS AT TANK (PSIG)	RELIEF VALVE PRESS (PSIG)	MIN TANK VOLUME (GAL)	MIN ACCEPT VOLUME (GAL)	TYPE	NOTES	OPER WEIGHT (LBS)
ET-1	HYDRONIC HEATING SYSTEM	MECH/ELEC ROOM 104	14	40.00	140.00	12.0	13	17	0.7	0.3	VERTICAL EXPANSION TANK	ALL	120

NOTES:

[1] TANK PRE-CHARGE PRESSURE

[2] DIAPHRAGM TYPE TANK

[3] FINAL EXPANSION TANK FILL PRESSURE TO BE SET EQUAL TO FIELD SYSTEM PRESSURE

L:\PROJECTS\214024 - NAVY - 11D008 - NASWI P252 HANGAR\SCHEDULES\SCHEDULES PART A\HVAC\[EXPANSION TANK SCHEDULE A.XLS]PART A EXPANSION TANK

HEATING WATER PUMP SCHEDULE

MARK	SYSTEM	LOCATION	FLUID	FLUID °F	CAPACITY (GPM)	TDH (FT)	MOTOR HP	MOTOR VOLT	MOTOR PH	MOTOR ENCLOS. TYPE	MOTOR SPEED	TYPE	NOTES	EQUIP WEIGHT
BCP-1	HYDRONIC HEATING SYSTEM	MECH/ELEC 104	GLYCOL	140	5	8	1/25	115	1	ODP	2	INLINE CENTRIFUGAL	[1],[2]	7.5
HWP-1	HYDRONIC HEATING SYSTEM	MECH/ELEC 104	GLYCOL	140	5	23	1/6	115	1	ODP	2	INLINE CENTRIFUGAL	[1],[2]	10.5

NOTES:

[1] 30% PROPYLENE GLYCOL / 70% WATER.

[2] MOTOR SPEED REFERS TO MANUFACTURES PRE-SET MOTOR SPEED SETTINGS.

L:\PROJECTS\214024 - NAVY - 11D008 - NASWI P252 HANGAR\SCHEDULES\SCHEDULES PART A\HVAC\[HEATING WATER PUMP SCHEDULE A.XLS]15100-01-PUMP SCHEDULE

DUCT HEATING COIL SCHEDULE

MARK	CFM	LOCATION	MAX COIL FACE VEL (FPM)	MAX AIR PD (IN WG)	MIN BTU/H	MIN ROWS	EAT DB (°F)	LAT DB (°F)	EWT (°F)	LWT (°F)	MAX GPM	MAX HEAD LOSS (FT WG)	CONTROL VALVE CV	BALANCING VALVE SIZE (IN)	NOTES
HC-1	535	SONOBOUY ISSUE / STORAGE	530	0.01	20617.0	1	52.5	87	140	118	1.9	1.6	2.20	3/4	[1],[2],[3]
HC-2	1190	SONOBOUY ISSUE / STORAGE	253	0.03	39539.0	1	27	55	140	106	2.4	2.8	2.25	3/4	[1],[2],[4]

NOTES:

[1] 30% PROPYLENE GLYCOL / 70% WATER SOLUTION

[2] 3-WAY CONTROL VALVE

[3] CONTROL VALVES SERVING HC-1: CV-SB-2

[4] CONTROL VALVES SERVING HC-2: CV-SB-3

L:\PROJECTS\214024 - NAVY - 11D008 - NASWI P252 HANGAR\SCHEDULES\SCHEDULES PART A\HVAC\[HEATING COIL SCHEDULE A.XLS]DUCT HEATING COIL

GLYCOL FEED TANK SCHEDULE

MARK	SYSTEM	LOCATION	TANK CAPACITY GAL	TANK FLUID	PUMP CAPACITY (GPM)	PUMP TDH (FT)	MOTOR HP	MOTOR VOLT	MOTOR PH	MOTOR ENCLOS. TYPE	TYPE	NOTES	EQUIP WEIGHT
GFT-1	HYDRONIC HEATING SYSTEM	MECH/ELEC 104	6.6	GLYCOL	1	30	50 W	115	1	ODP	DIAPHRAGM PUMP	[1],[2],[3]	60

NOTES:

[1] 30% PROPYLENE GLYCOL / 70% WATER SOLUTION.

[2] EQUIP WEIGHT IS WEIGHT WHEN TANK IF FULL

[3] PROVIDE TANK WALL MOUNT ASSEMBLY AND LOW LEVEL ALARM PANEL WITH UNIT

L:\PROJECTS\214024 - NAVY - 11D008 - NASWI P252 HANGAR\SCHEDULES\SCHEDULES PART A\HVAC\[GLYCOL FEED TANK SCHEDULE A.XLS]15100-01-PUMP SCHEDULE

BOILER SCHEDULE

MARK	TYPE	LOCATION	MIN OUTPUT (MBH)	GAS INPUT (MBH)	MINIMUM EFF (%)	PRESSURE PSIG DESIGN	PRESSURE PSIG OPER	FLUE DIA (IN)	NOTES	OPER WEIGHT (LBS)
B-1	HOT WATER	MECH/ELEC ROOM 104	17	85	95	25	13	2	[1],[2],[3],[4],[5]	145

NOTES:

[1] PROVIDE CONCENTRIC VENT KIT

[2] PROVIDE WALL-MOUNT BRACKET

[3] PROVIDE CONDENSATE NEUTRALIZATION KIT

[4] PROVIDE DDC CONTROLS FOR ON/OFF AND REMOTE SET POINT

[5] 30% GLYCOL/ 70% WATER SOLUTION

L:\PROJECTS\214024 - NAVY - 11D008 - NASWI P252 HANGAR\SCHEDULES\SCHEDULES PART A\HVAC\[BOILER SCHEDULE A.XLS]BOILER SCHEDULE

UNIT HEATERS- ELECTRIC

MARK	AREA SERVED	LOCATION	ELECTRICAL KW	ELECTRICAL VOLTS/ PHASE	ELECTRICAL AMPS	ELECTRICAL CONTROL VOLTAGE	INSTALLATION BOT UNIT HEIGHT AFF (FT)	INSTALLATION OPERATING WEIGHT (LBS)	NOTES
EUH-1	MECHANICAL ROOM	LOX BUILDING	2.6	208/1	13.1	24V	8	35	[1],[2],[3],[4]
EUH-2	PUMP ROOM	RINSE FACILITY	2.6	208/1	13.1	24V	8	35	[1],[2],[3],[4]

NOTES:

[1] 24 V CONTROL, CONTACTOR HOLDING COIL AND TRANSFORMER

[2] WALL SWIVEL MOUNTING BRACKET

[3] DISCONNECT SWITCH

[4] PILOT LIGHT

L:\PROJECTS\214024 - NAVY - 11D008 - NASWI P252 HANGAR\SCHEDULES\SCHEDULES PART A\HVAC\[ELECTRIC UH SCHEDULE A.XLS]ELECTRIC UNIT HEATER SCHEDULE

ECONOMIZER MIXING BOX SCHEDULE

MARK	SYSTEM	LOCATION (ROOM #)	DAMPER TYPE	OA DAMPER (W X L)	RA DAMPER (W X L)	MAX DAMPER VELOCITY (FT / MIN)	CONTROL SENSOR	ACTUATOR QTY	ACTUATOR POWER	ACTUATOR MOUNT LOCATION	MATERIAL	NOTES	WEIGHT
MB-1	AHU-1	103	PARALLEL BLADE	16" X 18"	16" X 18"	900	DRY BULB	1	24 VAC	OA	GALVANIZED	[1][2][3][4][5][6]	65
MB-2	AHU-2	106	PARALLEL BLADE	16" X 10"	16" X 10"	900	DRY BULB	1	24 VAC	OA	GALVANIZED	[1][2][3][4][5][6]	65

NOTES:

[1] FULLY INSULATED MIXING BOX

[2] ADJUSTABLE DRY BULB CONTROLS

[3] GASKETED LOW LEAK DAMPER BLADE

[4] PROVIDE DDC CONTROLS FOR ON/OFF AND REMOTE SET POINT

[5] OA DAMPER ACTUATOR DIRECT COUPLE TO RA DAMPER

[6] ECONOMIZER LOGIC CONTROLLER

L:\PROJECTS\214024 - NAVY - 11D008 - NASWI P252 HANGAR\SCHEDULES\SCHEDULES PART A\HVAC\MIXING BOX SCHEDULE.XLS

APPR	DATE	DESCRIPTION	SYM

NAVFAC

LARRY D. SWARTZ — STATE OF WASHINGTON — 27501 — REGISTERED PROFESSIONAL ENGINEER

2-18-15 SEAL

notkin
mechanical engineers
www.notkin.com
telephone: 206.448.1911
facsimile: 206.448.9485
2301 5th Avenue, Suite 401
Seattle, WA 98121

Contact: Larry Swartz, P.E.
notkin#: 214024
A/E INFO

APPROVED

FOR COMMANDER NAVFAC 3/2/15

ACTIVITY

NAS WHIDBEY ISLAND

SATISFACTORY TO	DATE
DES: BCD	DRW: JML
CHK: LDS	
<<PM/DM>>	JOSEPH KISIDAY
BRANCH MANAGER	
CHIEF ENG/ARCH	
<<XXX>>	

DEPARTMENT OF THE NAVY
NAVAL FACILITIES ENGINEERING COMMAND NORTHWEST
NAVAL AIR STATION WHIDBEY ISLAND

NAVAL FACILITIES ENGINEERING COMMAND ~ NORTHWEST
AULT FIELD - OAK HARBOR, WA

NAVAL AIR STATION WHIDBEY ISLAND
OAK HARBOR, WA

FY-15 MCON PROJECT P-259 P-8A AIRCRAFT
APRON EXPANSION - PART A

SCHEDULES

SCALE: AS NOTED

EPROJECT NO.:

CONSTR. CONTR. NO.
N44255-15-C-6003

NAVFAC DRAWING NO.
16030482

SHEET 228 OF 302

M-602

DRAWFORM REVISION: 10 MARCH 2009

L:\PROJECTS\214024 - Navy - 11D008 - NASWI P252 Hangar\Drawings\Part A\M-602.dwg, 2/13/2015 12:54:08 PM, pnb

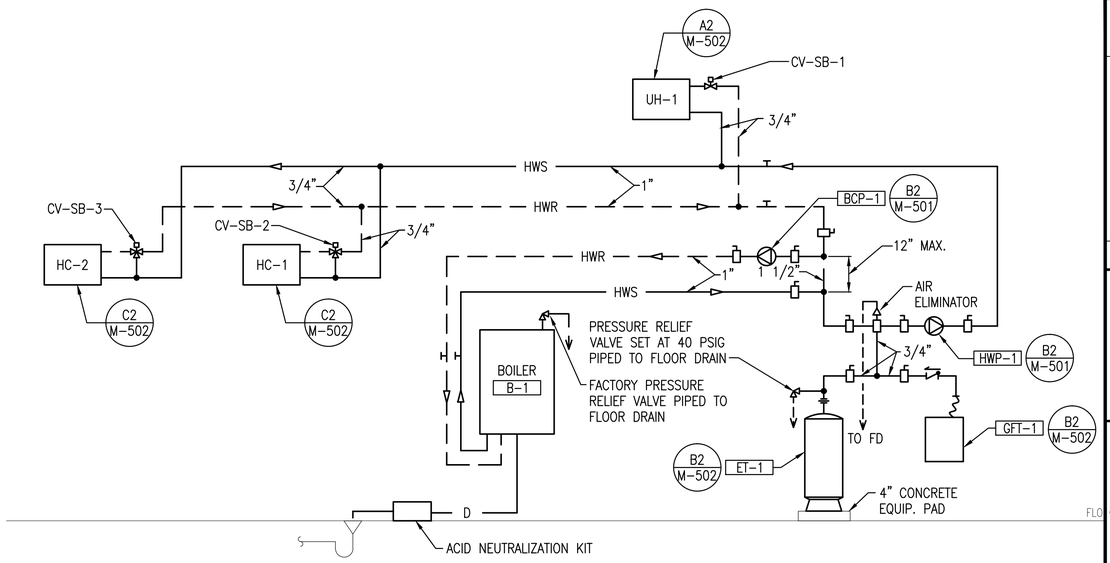

HOT WATER HEATING PIPING DIAGRAM

SCALE: NONE

MP411 C3

			APPR
			DATE
			DESCRIPTION
			SYM

NAVFAC

LARRY D. SWARTZ
STATE OF WASHINGTON
27501
REGISTERED
PROFESSIONAL ENGINEER
2-18-15
SEAL

notkin
mechanical engineers
www.notkin.com
telephone: 206.448.1911
facsimile: 206.448.9485
2301 5th Avenue, Suite 401
Seattle, WA 98121

Contact: Larry Swartz, P.E.
notkin#: 214024
A/E INFO

APPROVED

FOR COMMANDER NAVFAC 3/2/15

ACTIVITY

NAS WHIDBEY ISLAND

SATISFACTORY TO DATE

DES: BCD	DRW: JML	CHK: LDS

<<PM/DM>> JOSEPH KISIDAY

BRANCH MANAGER

CHIEF ENG/ARCH

<<XXX>>

DEPARTMENT OF THE NAVY
NAVAL FACILITIES ENGINEERING COMMAND
NAVAL AIR STATION WHIDBEY ISLAND

NAVAL FACILITIES ENGINEERING COMMAND ~ NORTHWEST
AULT FIELD ~ OAK HARBOR, WA

NAVAL AIR STATION WHIDBEY ISLAND
OAK HARBOR, WA

FY-15 MCON PROJECT P-259 P-8A AIRCRAFT APRON EXPANSION - PART A

PIPING DIAGRAM

SCALE: AS NOTED

EPROJECT NO.:

CONSTR. CONTR. NO.
N44255-15-C-6003

NAVFAC DRAWING NO.
16030483

SHEET 229 OF 302

M-603

DRAWFORM REVISION: 10 MARCH 2009

L:\PROJECTS\214024 - Navy - 11TO08 - NAS\W P252 Hangar\Drawings\Part A\M-603.dwg, 2/12/2015 6:21:59 PM, ir

DIRECT DIGITAL CONTROL POINTS SCHEDULE

DESCRIPTION	ACRONYM	AI	DI	AO	DO	ALARM	PRIORITY	NOTES
GENERAL								
OUTSIDE AIR TEMPERATURE	OA_T-1	X						
DDC ZONE TEMPERATURE SENSORS								
ZONE TEMP, ROOM 101	RM#101_Z_T-1	X				X	HIGH	
ZONE TEMP, ROOM 102B	RM#102B_Z_T-1	X				X	HIGH	
ZONE TEMP, ROOM 103	RM#103_Z_T-1	X				X	HIGH	
EXHAUST FAN EF-1								
EF-1 START/STOP	EF-1_SS				X	X	HIGH	
EF-1 STATUS	EF-1_STATUS	X						
EF-1 N2 RM EMERGENCY SHUT OFF	EF-1_N2_EMER_FANOFF		X				HIGH	
EF-1 02 RM EMERGECY SHUT OFF	EF-1_02_EMER_FANOFF		X				HIGH	
EXHAUST FANS EF-1 AND EF-2								
EF-X START/STOP	EF-X_SS				X	X	HIGH	
EF-X STATUS	EF-X_STATUS	X						
EF-2 EA DAMPER	EF-2_EA_ACD			X				
OXYGEN MONITOR SYSTEM, ROOM 104, AND ROOM 105								
02 MON, XX RM 104 CONCENTRATION	02-1 RM104_CONC	X					HIGH	
02 MON, XX RM 105 CONCENTRATION	02-2_RM105_CONC	X					HIGH	
02-1 MON, RM104 ALARM	02-1_RM104_ALARM		X				HIGH	>22%
02-2 MON, RM105 ALARM	02-2_RM105_ALARM		X				HIGH	<19.5%
ELECTRIC UNIT HEATER EUH-1								
EUH-X START/STOP	EUH-X_SS				X			
EUH-X STATUS	EUH-1_STATUS		X			X	HIGH	
ZONE TEMP (MECH RM-X)	RM-X_T-X_Z_T-1	X				YES	HIGH	40 DEG F
SEWAGE EJECTOR PUMP (SEP-1)								
SEP-1 MONITOR	SEP-1_MONITOR	X			X	X	HIGH	SEE A2/P502 FOR SEQUENCE OF OPERATIONS

L:\PROJECTS\214024 - NAVY - 11DO08 - NASWI P252 HANGAR\DRAWINGS\CONTROLS\[LOXPOINTS.XLS]DDC POINTS

CONTROL LEGEND:

- T 1 — TEMPERATURE SENSOR
- FT 1 — MANUAL RESET FREEZE STAT
- DP 1 — DIFFERENTIAL PRESSURE SENSOR
- SP 1 — STATIC PRESSURE SENSOR
- V 1 — CONTROL VALVE
- FS 1 — FLOW SENSOR
- SD 1 — SMOKE DETECTOR
- P 1 — PRESSURE SENSOR
- VFD — VARIABLE FREQUENCY DRIVE
- R — RELAY
- CR — CURRENT RELAY
- CS — CURRENT SENSOR
- A — CONTROL DAMPER ACTUATOR
- ECM — ELECTRONICALLY COMMUTATED MOTOR
- 02 — OXYGEN SENSOR
- SA — SUPPLY AIR
- RA — RETURN AIR
- EA — EXHAUST AIR
- OA — OUTSIDE AIR
- AIR MEASURING UNIT
- COOLING COIL
- HEATING COIL
- FAN
- PUMP
- (S) — ON/OFF SWITCH
- (T) — T-STAT
- ALARM INDICATOR LIGHT
- (P) — CONSTANT PRESSURE SENSOR

LOX PLANT, NITROGEN ROOM 104, OXYGEN ROOM 105, MAINTENANCE ROOM 103:

A. GENERAL: AN AIR TO AIR HEAT PUMP SYSTEM, AIR HANDLING UNIT AHU-1, OUTDOOR UNIT HP-2, AND EXHAUST FAN EF-1 PROVIDE HEATING (NO COOLING) AND VENTILATION BASED ON SCHEDULED HOURS. FCU-1 MAINTAINS THE SPACE TEMPERATURE TO THREE ROOMS BASED ON AN OCCUPANCY SCHEDULE. FANS RUN CONTINUALLY TO PREVENT THE BUILD UP OF GASES WITHIN EITHER THE NITROGEN ROOM OR THE OXYGEN ROOM. SWITCHES LOCATED ON THE EXTERIOR OF THE BUILDING AT EACH OF THE ROOMS ENTRANCES, HAS THE ABILITY TO OVERRIDE THE DDC SYSTEM AND SHUTDOWN THE EXHAUST SYSTEM. IN ADDITION, OXYGEN MONITOR SYSTEMS MONITOR OXYGEN LEVELS IN EACH OF THE ROOMS, ALARMING WHEN OXYGEN LEVELS FALL OUT OF SAFETY LIMITS. VISUAL INDICATORS LOCATED WITHIN EACH ROOM AS WELL AS ON THE OUTSIDE WALL BY EACH OF THE ENTRANCE DOORS ALERTS PERSONNEL TO THE PERILOUS CONDITION. ALL SET POINTS, TIME FRAMES AND SCHEDULES SHALL BE USER ADJUSTABLE THROUGH THE DDC, WITH THE EXCEPTION OF THE OXYGEN MONITOR SYSTEM.

B. HEAT PUMP AHU-1/HP-2 INCLUDES MANUFACTURER'S CONTROL SYSTEM WITH PROGRAMMABLE THERMOSTAT. THE UNIT OPERATES EITHER IN AN OCCUPIED OR UNOCCUPIED MODE. MANUFACTURER'S ECONOMIZER DAMPERS ARE INCLUDED FOR VENTILATION AND ECONOMIZER COOLING.

1. OCCUPIED MODE SETPOINTS: 78 DEG FOR COOLING, AND 68 DEG F FOR HEATING. PROVIDE MINIMUM OUTSIDE AIR DAMPER POSITION FOR VENTILATION.
2. UNOCCUPIED MODE: 85 DEG FOR COOLING, AND 55 DEG F FOR HEATING. OPERATE IN 100% RETURN AIR MODE UNLESS IN ECONOMIZER MODE.
3. PROVIDE A DDC TEMPERATURE SENSOR IN THE ZONE AND PROVIDE ALARM IF THE SPACE DROPS BELOW 50 DEG OR IS ABOVE 90 DEG.
4. PROVIDE MANUFACTURER'S ECONOMIZER DAMPER ASSEMBLY WITH ENTHALPY BASED CONTROLS. PROVIDE ECONOMIZER COOLING WHEN AVAILABLE AS FIRST STAGE COOLING. PROVIDE MINIMUM OUTSIDE AIR DURING OCCUPIED MODE.

C. EXHAUST FAN EF-1, THE FAN SHALL RUN CONTINUALLY IN THE AUTOMATIC MODE AND SHUTS DOWN ONLY VIA MOTOR DISCONNECT, OR EMERGENCY SHUT OFF SWITCH.

D. OXYGEN MONITOR: TWO MONITOR SYSTEMS MONITOR OXYGEN LEVELS IN EACH OF THE AND OXYGEN STORAGE ROOMS. IN THE EVENT OXYGEN LEVELS DROP BELOW 19.5% IN THE HYDROGEN ROOM, AN ALARM OCCURS BOTH LOCALLY, ILLUMINATION WARNING LIGHTS BOTH INSIDE AND OUTSIDE OF THE ROOM, AND THROUGH THE DDC. SIMILARILY, IF THE OXYGEN LEVEL RISES ABOVE 21% IN THE OXYGEN STORAGE ROOM, AN ALARM OCCURS BOTH LOCALLY AND THROUGH THE DDC, ILLUMINATING ITS ASSOCIATED WARNING LIGHTS. IN ADDITION THE DDC SYSTEM MONITORS THESE SYSTEMS FOR STATUS AND TROUBLE SIGNALS.

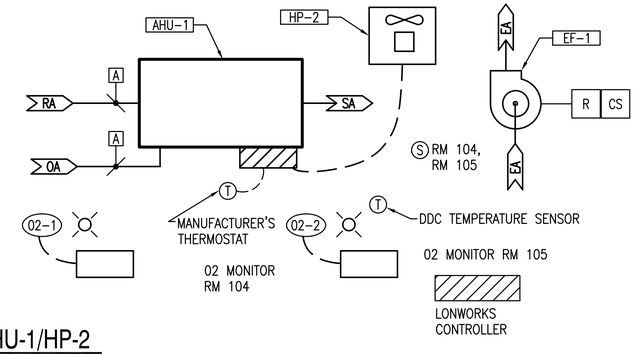

AHU-1/HP-2
(LOX PLANT, ROOM 103,104 &105) CONTROL DIAGRAM
SCALE: NONE

A4

APPR	DATE	DESCRIPTION	SYM

NAVFAC

LARRY D. SWARTZ — STATE OF WASHINGTON — 27501 — REGISTERED PROFESSIONAL ENGINEER
2-18-15 SEAL

notkin
mechanical engineers
www.notkin.com
telephone: 206.448.1911
facsimile: 206.448.9485
2301 5th Avenue, Suite 401
Seattle, WA 98121

Contact: Larry Swartz, P.E.
notkin#: 214024
A/E INFO

APPROVED
FOR COMMANDER NAVFAC 3/2/15

ACTIVITY
NAS WHIDBEY ISLAND

SATISFACTORY TO DATE

DES: BCD	DRW: JML	CHK: LDS

<<PM/DM>> JOSEPH KISIDAY
BRANCH MANAGER
CHIEF ENG/ARCH
<<XXX>>

DEPARTMENT OF THE NAVY
NAVAL FACILITIES ENGINEERING COMMAND
NAVAL AIR STATION WHIDBEY ISLAND

NAVAL FACILITIES ENGINEERING COMMAND ~ NORTHWEST
AULT FIELD - OAK HARBOR, WA

NAVAL AIR STATION WHIDBEY ISLAND
OAK HARBOR, WA

FY-15 MCON PROJECT P-259 P-8A AIRCRAFT APRON EXPANSION - PART A

LOX PLANT CONTROLS

SCALE:	AS NOTED
EPROJECT NO.:	
CONSTR. CONTR. NO.	N44255-15-C-6003
NAVFAC DRAWING NO.	16030484
SHEET	230 OF 302

M-811

DRAWFORM REVISION: 10 MARCH 2009

L:\PROJECTS\214024 - Navy - 11DO08 - NASWI P252 Hangar\Drawings\Part A\M-811.dwg, 2/23/2015 12:55:19 PM, pnb

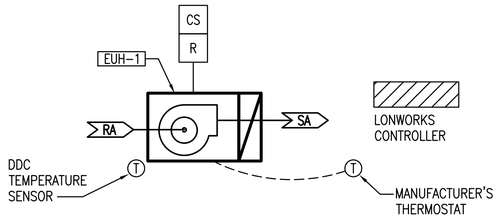

EUH-1 (LOX PLANT, ROOM 106) CONTROL DIAGRAM

SCALE: NONE

D1

LOX PLANT, MECHANICAL ROOM 106

A. GENERAL: AN ELECTRIC UNIT HEATER SERVES THE ROOM. THE DDC OPERATES, SCHEDULES TEMPERATURE SET POINTS AND PROVIDES ALARMS.

B. HEATING MODE: THE UNIT MAINTAINS A SPACE SET POINT OF 45 DEG F FOR HEATING, CYCLING COIL AND FAN ON & OFF.

DDC POINT NOTE:

1. SEE DDC PONTS ON M-811.

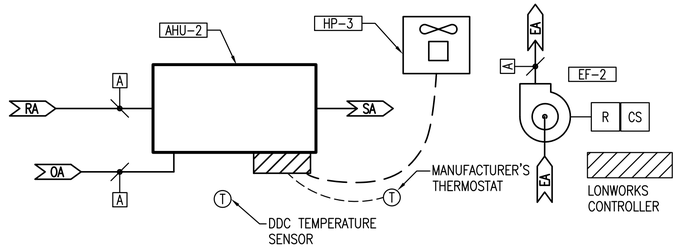

AHU-2/HP-3 (S/E MX FACILITY, ROOMS 101 & 102A) CONTROL DIAGRAM

SCALE: NONE

D4

LOX PLANT, MECHANICAL ROOM 106, OFFICE ROOM 101, AND RESTROOM 102A

A. GENERAL: AN AIR TO AIR HEAT PUMP SYSTEM AIR HANDLING UNIT, AHU-2, OUTDOOR UNIT HP-3, AND EXHAUST FAN EF-2 PROVIDE HEATING (NO COOLING) AND VENTILATION BASED ON SCHEDULED HOURS THROUGH THE DDC. AHU-2 MAINTAINS THE SPACE TEMPERATURE TO THE ROOMS VIA A SENSOR LOCATED IN THE OFFICE (ROOM 101) AND BASED ON AN OCCUPANCY SCHEDULE.

B. HEAT PUMP AHU-2/HP-3 INCLUDES MANUFACTURER'S CONTROL SYSTEM WITH PROGRAMMABLE THERMOSTAT. THE UNIT OPERATES EITHER IN AN OCCUPIED OR UNOCCUPIED MODE. MANUFACTURER'S ECONOMIZER DAMPERS ARE INCLUDED FOR VENTILATION AND ECONOMIZER COOLING.

1. OCCUPIED MODE SETPOINTS: 78 DEG FOR COOLING, AND 68 DEG F FOR HEATING. PROVIDE MINIMUM OUTSIDE AIR DAMPER POSITION FOR VENTILATION.

2. UNOCCUPIED MODE: 85 DEG FOR COOLING, AND 55 DEG F FOR HEATING. OPERATE IN 100% RETURN AIR MODE UNLESS IN ECONOMIZER MODE.

3. PROVIDE A DDC TEMPERATURE SENSOR IN THE ZONE AND PROVIDE ALARM IF THE SPACE DROPS BELOW 50 DEG OR IS ABOVE 90 DEG.

4. PROVIDE MANUFACTURER'S ECONOMIZER DAMPER ASSEMBLY WITH ENTHALPY BASED CONTROLS. PROVIDE ECONOMIZER COOLING WHEN AVAILABLE AS FIRST STAGE COOLING. PROVIDE MINIMUM OUTSIDE AIR DURING OCCUPIED MODE.

C. EXHAUST FAN EF-2, THE FAN SHALL RUN DURING OCCUPIED HOURS AND OFF BE OFF DURING UNOCCUPIED HOURS.

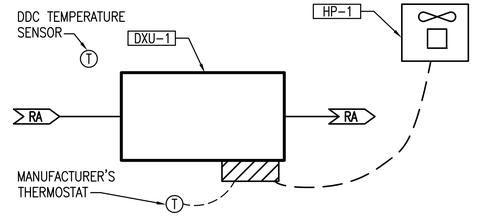

DXU-1/HP-1 (LOX PLANT, ROOM 102B) CONTROL DIAGRAM

SCALE: NONE

A4

LOX PLANT, ELECTRIC ROOM 102B

A. GENERAL: AN AIR TO AIR HEAT PUMP SYSTEM DXU-1 AND OUTDOOR UNIT HP-1 SERVES THE ROOM. THE HEAT PUMP INCLUDES INTEGRAL CONTROLS WITH MANUFACTURER'S PROGRAMMABLE THERMOSTAT. THE UNIT OPERATES CONTINUALLY.

B. HEATING MODE: THE UNIT MAINTAINS A SPACE SET POINT OF 65 DEG F FOR HEATING.

C. COOLING MODE: THE UNIT OPERATES TO MAINTAIN A SPACE SET POINT OF 85 DEG F.

D. PROVIDE A DDC TEMPERATURE SENSOR IN THE ZONE AND PROVIDE ALARM IF THE SPACE DROPS BELOW 50 DEG OR IS ABOVE 90 DEG.

APPR	DATE	DESCRIPTION	STM

NAVFAC

LARRY D. SWARTZ — STATE OF WASHINGTON — 27501 — REGISTERED PROFESSIONAL ENGINEER

2-18-15 SEAL

notkin
mechanical engineers
www.notkin.com
telephone: 206.448.1911
facsimile: 206.448.9485
2301 5th Avenue, Suite 401
Seattle, WA 98121

Contact: Larry Swartz, P.E.
notkin#: 214024
A/E INFO

APPROVED
FOR COMMANDER NAVFAC 3/2/15

ACTIVITY
NAS WHIDBEY ISLAND

SATISFACTORY TO DATE

DES: BCD	DRW: JML	CHK: LDS

<<PM/DM>> JOSEPH KISIDAY
BRANCH MANAGER
CHIEF ENG/ARCH
<<XXX>>

DEPARTMENT OF THE NAVY
NAVAL FACILITIES ENGINEERING COMMAND
NAVAL FACILITIES ENGINEERING COMMAND ~ NORTHWEST
NAVAL AIR STATION WHIDBEY ISLAND
AULT FIELD ~ OAK HARBOR, WA
NAVAL AIR STATION WHIDBEY ISLAND
OAK HARBOR, WA

FY-15 MCON PROJECT P-259 P-8A AIRCRAFT
APRON EXPANSION - PART A

LOX PLANT CONTROLS

SCALE: AS NOTED
EPROJECT NO.:
CONSTR. CONTR. NO.
N44255-15-C-6003
NAVFAC DRAWING NO.
16030485
SHEET 231 OF 302

M-812

DRAWFORM REVISION: 10 MARCH 2009

L:\PROJECTS\214024 - Navy - 11DO08 - NASWI P252 Hangar\Drawings\Part A\M-812.dwg, 2/23/2015 12:54:35 PM, pnb

SONOBUOY OFFICE:

A. GENERAL: THE OFFICE, ITS TOILET ROOM (101A) AND JANITORS CLOSET (101B) ARE HEATED AND VENTILATED BY A DUCTED OUTSIDE AIR SYSTEM, CONNECTED TO AN INLINE FAN (SF–1), HOT WATER COIL (HC–1), AND DUCT FILTER (DF–1), AND EXHAUST FAN EF–3. SPACE TEMPERATURE IS CONTROLLED BY A SENSOR LOCATED WITHIN THE OFFICE. ALL SETPOINTS, TIME FRAMES AND SCHEDULES SHALL BE USER ADJUSTABLE THROUGH THE DDC.

B. OUTSIDE AIR DAMPER: THE CONTROL SYSTEM SHALL POSITION THE OUTDOOR AIR DAMPER CLOSED WHEN SF–1IS OFF. THE CONTROL SYSTEM POSITIONS THE DAMPER TO OPEN POSITION PRIOR TO STARTING THE FAN FOR 'OCCUPIED MODE', AND DELAYS COMMANDING THE DAMPER CLOSED UNTIL THE ASSOCIATED FAN WHEELS STOP TURNING (A PRESET PERIOD OF TIME). DURING 'UNOCCUPIED MODE', THE DAMPER REMAINS CLOSED.

C. SUPPLY FAN SF–1: THE DDC SYSTEM MONITORS, ALARMS, SCHEDULES AND PROVIDES TEMPERATURE SETPOINTS. THE FAN OPERATES EITHER IN AN OCCUPIED OR UNOCCUPIED MODE AS SIGNALLED BY THE DDC. SF–1 HAS A DIGITALLY CONTROLLED ELECTRONICALLY COMMUTATED MOTOR (ECM) WHICH IS SPEED CONTROLLED. DDC TO PROVIDE ECM SETPOINT. COORDINATE THE ECM SETPOINT WITH THE TEST AND BALANCE (TAB) CONTRACTOR BASED ON THE SCHEDULED AIRFLOW. THE ECM WITH LOCAL MANUFACTURER CONTROLS PROVIDES A CONSTANT AIRFLOW BASED ON THE DISCHARGE DUCT PRESSURE. THIS DUCT PRESSURE SENSOR IS FURNISHED WITH/BY THE ECM AND DOES NOT REQUIRE DDC INPUT.

D. OCCUPIED MODE: UPON CONFIRMATION THE OUTSIDE AIR DAMPER IS OPEN TO THE MINIMUM OUTSIDE AIR POSITION, THE FAN STARTS. UPON SIGNAL TO UNOCCUPIED MODE, THE FAN STOPS.DURING HEATING SEASON (WHEN THE OUTSIDE AIR TEMPERATURE IS LESS THAN 65 DEG F (ADJUSTABLE)), OPERATING TO MAINTAIN A MINIMUM HEATING SET POINT OF 68 DEG F. DURING COOLING SEASON (WHEN OUTSIDE AIR IS ABOVE 65 DEG F (ADJUSTABLE)), THE UNIT OPERATES IN A COOLING MODE. UPON SIGNAL THE SPACE TEMPERATURE HAS RISEN ABOVE SET POINT, AND THE OUTSIDE AIR IS COOLER THAN THE INSIDE TEMPERATURE, THE OUTSIDE AIR DAMPER MODULATES OPEN, WHILE THE RETURN DAMPER MODULATES CLOSED. THE DAMPERS MODULATE IN UNISON TO MAINTAIN COOLING SETPOINT UNTIL IN FULL OUTSIDE AIR MODE. ONCE IN FULL OUTSIDE AIR MODE, THE UNIT OPERATES IN FULL OUTSIDE AIR MODE UNLESS THE OUTSIDE AIR TEMPERATURE RISES ABOVE THE INSIDE AIR TEMPERATURE AT WHICH POINT THE OUTSIDE AIR DAMPER GOES TO MINIMUM POSITION AND THE RETURN DAMPER TO ITS MAXIMUM POSITION. UPON SPACE TEMPERATURE DROPPING BELOW HEATING SETPOINT, THE UNIT REVERTS TO HEATING CONTROL.

E. UNOCCUPIED MODE: WHEN THE SPACE TEMPERATURE DROPS TO 55 DEGREES F FOR 15 MINUTES, SF–1 IS SIGNALLED TO 'TEMP HEATING', THE OUTSIDE AIR DAMPER CLOSED, EXHAUST AIR DAMPER CLOSED AND RETURN DAMPER OPEN. UPON THE SPACE TEMPERATURE RISING TO 58 DEGREES FOR 15 MINUTES, THE UNIT FAN SWITCHES BACK TO UNOCCUPIED MODE.

F. FILTER DF–1: A DIFFERENTIAL PRESSURE SENSOR MONITORS PRESSURE DROP ACROSS THE FILTER BANK AND ALARMS WHEN THE FILTER BANK SENSOR EXCEEDS AIR PRESSURE DROP INDICATED IN FILTER SCHEDULE.

G. HC–1 MAINTAINS A HEATING SPACE TEMPERATURE IN ROOM 101 BASED ON OCCUPANCY SCHEDULE. WHEN IN OCCUPIED MODE THE VALVE MODULATES TO HOLD THE SPACE TEMPERATURE. IN UNOCCUPIED, 'TEMP HEATING MODE', THE VALVE GOES TO FULL OPEN UNTIL SPACE TEMPERATURE IS SATISFIED PER UNOCCUPIED SETPOINT.

H. EF–1 IS CONTROLLED ON IN OCCUPIED MODE AND IS OFF IN THE UNOCCUPIED MODE.

SONOBUOY STORAGE 102, SONOBUOY ISSUE 103:

A. GENERAL: THE SPACES ARE PROVIDED WITH A DUCTED OUTSIDE AIR SYSTEM, CONNECTED TO AN INLINE FAN (SF–2), HOT WATER COIL (HC–2), AND DUCT FILTER (DF–2). SPACE TEMPERATURE IS CONTROLLED BY A SENSOR LOCATED WITHIN THE ISSUE ROOM. INDIRECT GAS FIRED RADIANT HEATERS PROVIDE SPACE TEMPERATURE CONTROL WITHIN EACH SPACE. ALL SETPOINTS, TIME FRAMES AND SCHEDULES SHALL BE USER ADJUSTABLE THROUGH THE DDC.

B. OUTSIDE AIR DAMPER: THE CONTROL SYSTEM SHALL POSITION THE OUTDOOR AIR DAMPER CLOSED WHEN SF–2 IS OFF. THE CONTROL SYSTEM POSITIONS THE DAMPER TO OPEN POSITION PRIOR TO STARTING THE FAN FOR 'OCCUPIED MODE', AND DELAYS COMMANDING THE DAMPER CLOSED UNTIL THE ASSOCIATED FAN WHEELS STOP TURNING (A PRESET PERIOD OF TIME). DURING 'UNOCCUPIED MODE', THE DAMPER REMAINS CLOSED.

C. SUPPLY FAN SF–2: THE DDC SYSTEM MONITORS ALARMS, SCHEDULES AND SPACE DIFFERENTIAL PRESSURE BETWEEN AMBIENT BAROMETRIC PRESSURE AND PRESSURE IN ROOM 103. THE FAN OPERATES EITHER IN AN OCCUPIED OR UNOCCUPIED MODE AS SIGNALLED BY THE DDC.

1. OCCUPIED MODE: UPON CONFIRMATION THE OUTSIDE AIR DAMPER IS OPEN, THE FAN STARTS. FAN SPEED IS MODULATED TO MAINTAIN BUILDING PRESSURE AT 0.08 INCHES (ADJUSTABLE) OF WATER POSITIVE RELATIVE TO AMBIENT BAROMETRIC PRESSURE. UPON SIGNAL TO UNCCUPIED MODE, THE FAN STOPS AND THE OUTSIDE AIR DAMPER CLOSES.

2. UNOCCUPIED MODE: WHEN THE OUTSIDE AIR TEMPERATURE DROPS TO 35 DEGREES F FOR 15 MINUTES, VALVE V–2 IS SIGNALLED TO THE FULL OPEN POSITION. UPON THE OUTSIDE AIR TEMPERATURE RISING TO 40 DEGREES FOR 15 MINUTES, THE CONTROL VALVE IS SIGNALLED TO THE FULL BYPASS POSITION.

D. FILTER DF–2: A DIFFERENTIAL PRESSURE SENSOR MONITORS PRESSURE DROP ACROSS THE FILTER BANK AND ALARMS WHEN THE FILTER BANK SENSOR EXCEEDS AIR PRESSURE DROP INDICATED IN FILTER SCHEDULE.

E. HC–2 MAINTAINS A SUPPLY AIR TEMPERATURE OF 55 DEG F (ADJUSTABLE) DURING OCCUPIED PERIOD, WHEN OUTSIDE AIR TEMPERATURE IS 50 DEG F OR LOWER. WHEN IN OCCUPIED MODE THE VALVE MODULATES TO HOLD THE SUPPLY AIR TEMPERATURE SETPOINT.

F. THE RADIANT SYSTEM COMES WITH INTEGRAL CONTROL SYSTEM WHILE THE DDC MONITORS ALARMS, STATUS AND PROVIDES OCCUPIED/UNOCCUPIED STATUS. THE RADIANT HEATING SYSTEM PROVIDES COMFORT HEATING VIA ITS INTEGRAL CONTROL SYSTEM.

DIRECT DIGITAL CONTROL POINTS SCHEDULE

DESCRIPTION	ACRONYM	AI	DI	AO	DO	ALARM	PRIORITY	NOTES
GLOBAL VALUES								
OUTSIDE AIR TEMPERATURE	OA_T–1	X						
SUPPLY AIR FAN SYSTEM (SF-1)								
SF–1 RA DAMPER	SF–1_RA_ACD			X				
SF–1 OA DAMPER	SF–1_OA_ACD			X				
DF–1 F–1 DP	DP–1_F–1_DP–1	X				X	LOW	
SF–1 START/STOP	SF–1_SS				X		HIGH	VIA ECM
SF–1 STATUS	SF–1_STATUS	X				X	HIGH	VIA ECM
EF–1 START/STOP	EF–1_SS				X			
EF–1 STATUS	EF–1_STATUS	X						
ZONE TEMP	RM#101_Z_T–1	X				X	HIGH	T < SETTING – 8
HEATING COIL (HC-1)								
HC–1 VALVE	HC–1_V–1			X				
HC–1 VALVE POSITION	HC–_V–1_POS	X						
HC–1 FREEZE PROTECTION	HC–1_FT–1		X			X	HIGH	
HC–1 SA TEMP	HC–1_T–1	X						
SUPPLY AIR FAN SYSTEM (SF-2)								
SF–2 OA DAMPER	SF–2_OA_ACD			X				
DF–2 F–2 DP	DP–2_F–1_DP–1	X				X	LOW	
SF–2 START/STOP	SF–2_SS				X		HIGH	VIA ECM
SF–2 STATUS	SF–2_STATUS	X				X	HIGH	VIA ECM
SF–2 SF STATUS	SF–2_SF_STATUS		X			X	HIGH	
ZONE PRESSURE	RM#102_DP_DP–2	X						
HEATING COIL (HC-2)								
HC–2 VALVE	HC–2_V–2			X				
HC–2 VALVE POSITION	HC–_V–2_POS	X						
HC–2 FREEZE PROTECTION	HC–2_FT–1		X			X	HIGH	
HC–2 SA TEMP	HC–2_T–2	X						
RADIANT HEATER (RH-1)								
RH STATUS	RH_STATUS	X						
RH TROUBLE	RH_TROUBLE		X			X	HIGH	
ZONE TEMP	RM#102_Z_T–2	X				X	HIGH	T < SETTING – 8
ZONE TEMP	RM#103_Z_T–3	X				X	HIGH	T < SETTING – 8
SEWAGE DJECTOR PUMP (SEP-2)								
SEP–2 STATUS	SEP–2_STATUS		X			X	HIGH	SEE A2/P–501 FOR SEQUENCE OF OPERATION

L:\PROJECTS\214024 – Navy – 11D008 – NASWI P252 Hangar\Drawings\Controls\[SONOBUOY CONTROL POINTS.xls]points

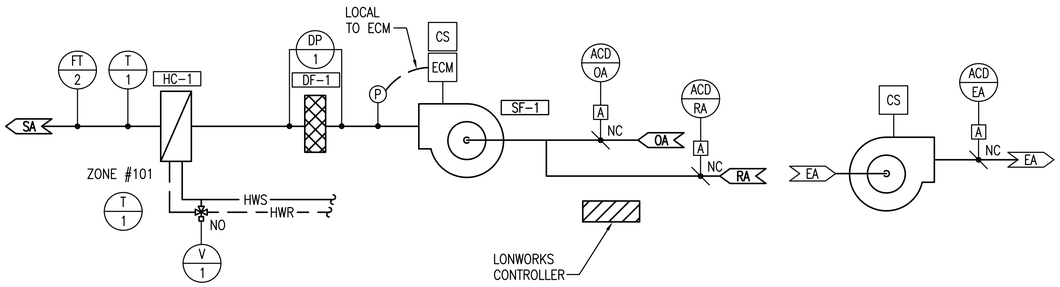

SONOBUOY OFFICE CONTROL DIAGRAM (A1)

SCALE: NONE

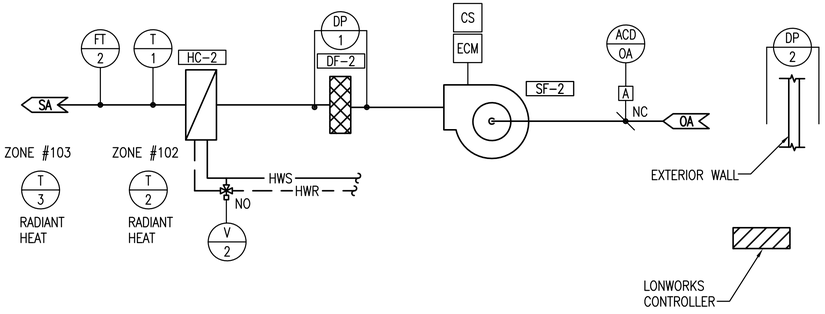

SONOBUOY STORAGE CONTROL DIAGRAM (A4)

SCALE: NONE

APPR	DATE	DESCRIPTION	SYM

NAVFAC

LARRY D. SWARTZ — STATE OF WASHINGTON — 27501 — REGISTERED PROFESSIONAL ENGINEER
2–18–15 SEAL

notkin
mechanical engineers
www.notkin.com
telephone: 206.448.1911
facsimile: 206.448.9485
2301 5th Avenue, Suite 401
Seattle, WA 98121

Contact: Larry Swartz, P.E.
notkin#: 214024
A/E INFO

APPROVED
FOR COMMANDER NAVFAC 3/2/15

ACTIVITY
NAS WHIDBEY ISLAND

SATISFACTORY TO DATE

DES: BCD | DRW: JML | CHK: LDS

<<PM/DM>> JOSEPH KISIDAY

BRANCH MANAGER

CHIEF ENG/ARCH

<<XXX>>

DEPARTMENT OF THE NAVY
NAVAL FACILITIES ENGINEERING COMMAND
NAVAL AIR STATION WHIDBEY ISLAND

NAVAL FACILITIES ENGINEERING COMMAND – NORTHWEST
AULT FIELD – OAK HARBOR, WA

NAVAL AIR STATION WHIDBEY ISLAND
OAK HARBOR, WA

FY-15 MCON PROJECT P-259 P-8A AIRCRAFT APRON EXPANSION - PART A

SONOBUOY ISSUE/STORAGE FACILITY CONTROLS

SCALE: AS NOTED

EPROJECT NO.:

CONSTR. CONTR. NO.
N44255–15–C–6003

NAVFAC DRAWING NO.
16030486

SHEET 232 OF 302

M-821

DRAWFORM REVISION: 10 MARCH 2009

L:\PROJECTS\214024 - Navy - 11D008 - NASWI P252 Hangar\Drawings\Part A\M-821.dwg, 2/23/2015 2:37:49 PM, pnb

HEATING WATER CONTROL SEQUENCE:

A. THE HEATING HOT WATER SYSTEM: THE SYSTEM IS CONFIGURED AS A PRIMARY SECONDARY PUMPING SYSTEM. THE PRIMARY LOOP INCLUDES: THE BOILER (B-1) AND A BOILER CIRCULATION PUMP (BCP-1). THE SECONDARY LOOP INCLUDES A HOT WATER PUMP (HWP-1), UNIT HEATER (UH-1), AND DUCT COILS (HC-1 AND HC-2). THE SYSTEM IS DESIGNED FOR LOW WATER SUPPLY TEMPERATURE (140 DEGREES F MAXIMUM) WITH HIGH TEMPERATURE DROPS ACROSS COILS TO OPTIMIZE CONDENSING BOILER EFFICEINCY. SEE SPECIFICATION SECTION 23 21 13.00 20 FOR BOILER KILL SWITCH (SW/1) REQUIREMENTS. ALL SETPOINTS, TIME FRAMES AND SCHEDULES SHALL BE USER ADJUSTABLE THROUGH THE DDC.

B. BOILER CONTROL: B-1 IS EQUIPPED WITH A BOILER CONTROL PANEL (THAT IS FURNISHED BY THE BOILER MANUFACTURER) TO CONTROL THE BOILER BURNER AND BOILER CIRCULATION PUMP (BCP-1) OPERATION. THE BOILER OPERATES VIA BURNER /CAPACITY CONTROLS TO MAINTAIN THE DESIRED DISCHARGE WATER TEMPERATURE AS SENSED BY BOILER TEMPERATURE SENSOR (B-X HWS TEMP). THE DDC COMMUNICATES SET POINT TO THE BOILER CONTROL PANEL BASED ON HEATING SYSTEM DEMANDS. IN ADDITION THE DDC MONITORS THE BOILER FOR STATUS, FAILURE TO START/STOP AND ALARM CONDITIONS.

C. HEATING HOT WATER SYSTEM: THE HEATING WATER SYSTEM SHALL BE ENABLED WHEN ANY SPACE TEMPERATURE SENSOR HEATING SETPOINT IS NOT SATISFIED FOR 15 MINUTES, AND WHENEVER THE OUTDOOR TEMPERATURE DROPS BELOW 55 DEGREES F (ADJUSTABLE). WHEN ENABLED BY THE DDC SYSTEM THE BOILER CONTROL PANEL SHALL START BCP-1 AND THE INITIAL HOT WATER SET POINT SHALL BE 110 DEGREES F. THE HEATING SYSTEM SHALL BE DISABLED WHEN THERE IS NO CALL FOR HEATING IN THE BUILDING AS DETERMINED BY HEATING VALVE POSITIONS.

D. HOT WATER RESET: IF ANY HOT WATER COIL VALVE IS 100% OPEN, AND THE ASSOCIATED SPACE TEMPERATURE IS NOT SATISFIED FOR 15 MINUTES, THEN THE SUPPLY WATER TEMPERATURE INCREASES TEN DEGREES F EVERY 15 MINUTES UNTIL THE SPACE IS SATISFIED. IF ALL VALVES ARE AT LEAST 50% CLOSED, THEN THE WATER RESETS DOWN TEN DEGREES F EVERY 15 MINUTES, UNTIL AT LEAST ONE VALVE IS 90% OPEN. HOT WATER RESETS BETWEEN A MAXIMUM OF 140 DEG F, AND A MINIMUM OF 110 DEG F.

E. SECONDARY LOOP PUMP CONTROL: HWP-1 OPERATES ON A CALL FOR HEATING, AND WHEN THE OUTSIDE AIR TEMPERATURE DROPS TO 35 DEG F FOR FIFTEEN MINS (EVEN IF ALL SPACE CONDITIONS ARE SATISFIED). THE PUMP CYCLES OFF WHEN ALL SPACE CONDITIONS ARE SATISFIED FOR AT LEAST 15 MINS, AND THE OUTSIDE AIR TEMPERATURE HAS RISEN ABOVE 35 DEG F FOR AT LEAST 15 MIN.

DIRECT DIGITAL CONTROL POINTS SCHEDULE

DESCRIPTION	ACRONYM	AI	DI	AO	DO	ALARM	PRIORITY	NOTES
HEATING WATER SYSTEM (B-1, BCP-1)								
B-X ENABLE/DISABLE	B-X_SS				X			[1]
B-X ALARM	B-X_ALARM		X			X	HIGH	[1]
B-X SETPOINT RESET	B-X_HWS_SETPOINT			X				[1]
HOT WATER SUPPLY	HWS_T-1	X				X	MEDIUM	
HOT WATER SUPPLY	HWS_T-2	X						
BCP-1 CURRENT SENSOR	BCP-1_CS	X				X	HIGH	
SECONDARY LOOP HEATING WATER PUMP (HWP-1)								
HWP-1 CURRENT SENSOR	HWP-1_CS	X				X	HIGH	
HWP-1 START/STOP	HWP-1_SS				X			
MECHANICAL ROOM HEAT (UH-1)								
UH-1 START/STOP	UH-1_SS				X			
UH-1 STATUS	UH-1_STATUS		X			X	HIGH	
UH-1 UH VALVE	UH-1_HC_V-3			X				
UH-1 UH VALVE POSITION	UH-1_HC_V-3_POS	X						
ZONE TEMP (MECH RM-104)	RM#104_Z_T-1	X				X	HIGH	

NOTES:
[1] PROVIDE POINT VIA BOILER CONTROL PANEL LONWORKS INTERFACE.

FILE: SONO HW POINTS.X2A
L:\PROJECTS\214024 - Navy - 11D008 - NASWI P252 Hangar\Drawings\Controls\[SONO HW points.xls]HW POINTS

MECHANICAL ROOM 104 - UNIT HEATER (UH-1) CONTROL SEQUENCE:

A. GENERAL: THE SPACE IS CONSIDERED A NON OCCUPIED AREA. A HOT WATER UNIT HEATER MAINTAINS SPACE HEATING CONDITION WHEN OUTSIDE AIR IS LESS THAN 50 DEG. F. IF THE SPACE DROPS BELOW 40 DEG F AN ALARM CONDITION OCCURS. ALL SET POINTS AND TIME PERIODS SHALL BE USER ADJUSTABLE.

B. HEATING CONTROL: UPON SIGNAL THE SPACE TEMPERATURE HAS DROPPED BELOW SET POINT, THE UNIT FAN IS SIGNALED ON AND THE HEATING COIL MODULATES TO MAINTAIN 55 DEG F. UPON SENSING THE SPACE HAS ACHIEVED SET POINT FOR FIFTEEN MINUTES, THE UNIT CYCLES OFF.

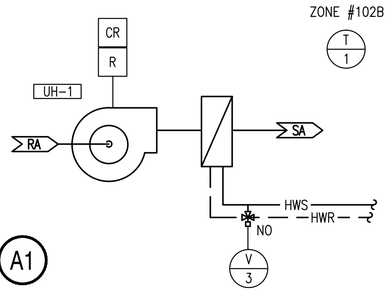

UH-1 CONTROL DIAGRAM (A1)
SCALE: NONE

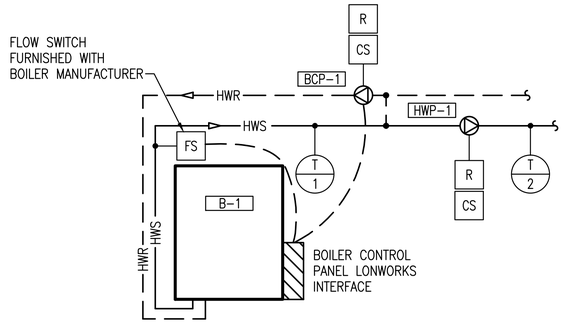

HEATING WATER SYSTEM CONTROL DIAGRAM (A4)
SCALE: NONE

APPR | DATE | DESCRIPTION | SYM

NAVFAC

LARRY D. SWARTZ
STATE OF WASHINGTON
27501
REGISTERED
PROFESSIONAL ENGINEER
2-18-15
SEAL

notkin
mechanical engineers
www.notkin.com
telephone: 206.448.1911
facsimile: 206.448.9485
2301 5th Avenue, Suite 401
Seattle, WA 98121

Contact: Larry Swartz, P.E.
notkin#: 214024
A/E INFO

APPROVED
FOR COMMANDER NAVFAC 3/2/15
ACTIVITY
NAS WHIDBEY ISLAND
SATISFACTORY TO DATE
DES: BCD | DRW: JML | CHK: LDS
<<PM/DM>> JOSEPH KISIDAY
BRANCH MANAGER
CHIEF ENG/ARCH
<<XXX>>

DEPARTMENT OF THE NAVY
NAVAL FACILITIES ENGINEERING COMMAND
NAVAL AIR STATION WHIDBEY ISLAND

NAVAL FACILITIES ENGINEERING COMMAND ~ NORTHWEST
AULT FIELD - OAK HARBOR, WA
NAVAL AIR STATION WHIDBEY ISLAND
OAK HARBOR, WA
FY-15 MCON PROJECT P-259 P-8A AIRCRAFT
APRON EXPANSION - PART A
SONOBUOY ISSUE/STORAGE FACILITY CONTROLS

SCALE: AS NOTED
EPROJECT NO.:
CONSTR. CONTR. NO.
N44255-15-C-6003
NAVFAC DRAWING NO.
16030487
SHEET 233 OF 302
M-822
DRAWFORM REVISION: 10 MARCH 2009

L:\PROJECTS\214024 - Navy - 11D008 - NASWI P252 Hangar\Drawings\Part A\M-822.dwg, 2/12/2015 6:22:09 PM, ir

AIRCRAFT RINSE FACILITY WATER CONTROL SEQUENCE:

AIRCRAFT RINSE FACILITY WATER CONTROL SEQUENCE

A. AIRCRAFT RINSE WATER SYSTEM: THE SYSTEM IS CONFIGURED TO SPRAY WATER TO BOTH THE BOTTOM AND TOP OF THE AIRCRAFT AS IT MOVES THROUGH THE AIRCRAFT RINSE FACILITY SYSTEM. THE AIRCRAFT BOTTOM PORTION: A PRESSURE REDUCING VALVE (SET TO 30 PSIG) AND 21 FULL CONE NOZZLES SPLIT INTO TWO TROUGHS. THE AIRCRAFT TAIL/TOP PORTION: A PRESSURE REDUCING VALVE (SET TO 80 PSIG) AND 10 NOZZLES SPLIT ONTO TWO STANCHIONS. THE SYSTEM IS DESIGNED TO FLOW WATER AT A RATE OF 1,000 GALLONS PER MINUTE WITH DESIGN RINSE CYCLE TAKING 60 SECONDS TO COMPLETE WHILE THE AIRCRAFT IS TAXIING THROUGH THE AIRCRAFT RINSE FACILITY. THE DETECTION OF AN AIRCRAFT ENTERING THE AIRCRAFT RINSE FACILITY WILL BE SIGNALED TO THE DDC SYSTEM BY AN DETECTION LOOP (DL-1) THROUGH THE ASSOCIATED CONTROLLER. THE DETECTION THAT AN AIRCRAFT HAS COMPLETED THE RINSE CYCLE WILL BE SIGNALED TO THE DDC SYSTEM BY ANOTHER DETECTION LOOP (DL-2) THROUGH THE ASSOCIATED CONTROLLER. DETECTION LOOPS AND ASSOCIATED CONTROLLERS ARE PROVIDED BY THE CIVIL SUBCONTRACTOR. CONTROL VALVES ARE PROVIDED WITH A VALVE CONTROLLER WHICH ALLOWS CONTROL OF FLOW, OPENING RATE, AND CLOSING RATE.

B. RINSE INITIATION CONTROL: THE RINSE IS INITIATED UPON THE DETECTION OF AN AIRCRAFT MOVING THROUGH DL-1. THE INDUCTION LOOP CONTROLLER SIGNALS THE DDC SYSTEM THAT AN AIRCRAFT IS PRESENT. THE DDC SYSTEM ENABLES RINSE MODE.

C. RINSE MODE: ENABLING OF RINSE MODE INITIATES A COUNTDOWN TIMER SET FOR 10 SECONDS (ADJUSTABLE). WHEN THE COUNTDOWN IS COMPLETED THE DDC SYSTEM SIGNALS THE CV-RF-1 VALVE CONTROLLER TO OPEN CV-RF-1. VALVE OPENING SPEED TO BE SET AT 1 SECOND (ADJUSTABLE). RINSE MODE IS DISABLED UPON THE DETECTION OF AN AIRCRAFT MOVING THROUGH DL-2. DISABLING OF RINSE MODE INITIATES A COUNTDOWN TIMER SET FOR 60 SECONDS (ADJUSTABLE). WHEN THE COUNTDOWN IS COMPLETED THE DDC SYSTEM SIGNALS THE CV-RF-1 VALVE CONTROLLER TO CLOSE CV-RF-1. VALVE CLOSING SPEED TO BE SET AT 5 SECONDS (ADJUSTABLE). ONCE THE CVRF-1 VALVE IS CLOSED THE CV-RF-1 VALVE CONTROLLER SIGNALS THE DDC SYSTEM THAT CV-RF-1 IS CLOSED. UPON RECEIVING THE VALVE CLOSURE SIGNAL, THE DDC SYSTEM ENABLES STANDBY MODE.

D. FREEZE PROTECTION MODE: FREEZE PROTECTION SHALL BE ENABLED WHEN THE AMBIENT TEMPERATURE SENSOR INDICATES AN OUTDOOR TEMPERATURE BELOW 35 DEGREES F FOR A PERIOD OF 15 MINUTES. WHEN FREEZE PROTECTION MODE IS ENABLED THE DDC SYSTEM SIGNALS THE CV-RF-2 VALVE CONTROLLER TO OPEN CV-RF-2. VALVE OPENING SPEED TO BE SET AT 1 SECOND (ADJUSTABLE). VALVE CV-RF-2 WILL REMAIN OPEN FOR 5 MINUTES (ADJUSTABLE). AFTER 5 MINUTES THE DDC SYSTEM SIGNALS THE CV-RF-2 VALVE CONTROLLER TO CLOSE CV-RF-2. VALVE CLOSING SPEED TO BE SET AT 2 SECONDS (ADJUSTABLE). FREEZE PROTECTION MODE IS IMMEDIATELY DISABLED AND RINSE MODE ENABLED UPON THE DETECTION OF AN AIRCRAFT MOVING THROUGH DL-1.

E. STANDBY MODE: STANDBY MODE IS ENABLED WHENEVER RINSE MODE AND FREEZE PROTECTION MODES ARE DISABLED. VALVES CV-RF-1 AND CV-RF-2 ARE IN THE CLOSED POSITION. STANDBY MODE IS DISABLED WHEN EITHER RINSE MODE OR FREEZE PROTECTION MODE IS ENABLED.

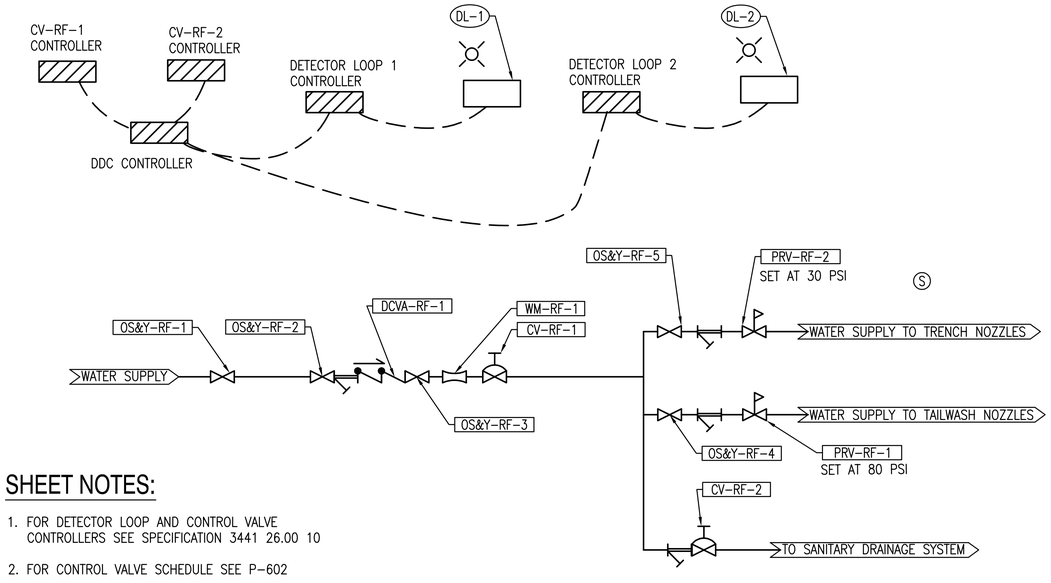

SHEET NOTES:

1. FOR DETECTOR LOOP AND CONTROL VALVE CONTROLLERS SEE SPECIFICATION 3441 26.00 10
2. FOR CONTROL VALVE SCHEDULE SEE P-602

851661

AIRCRAFT RINSE FACILITY CONTROL DIAGRAM

SCALE: NONE

A1

DIRECT DIGITAL CONTROL POINTS SCHEDULE

DESCRIPTION	ACRONYM	AI	DI	AO	DO	ALARM	PRIORITY	NOTES
AIRCRAFT RINSE WATER SYSTEM (CV-RF-1)								
CV-RF-1 CONTROL PANEL	CV-1_OC		X		X		HIGH	
CV-RF-1 STATUS	CV-1_STATUS		X				HIGH	
CV-RF-1 ALARM	CV-1_ALARM		X			X	HIGH	
CV-RF-1 OPEN SETPOINT RESET	CV-1_OPEN RATE_SETPOINT			X				
CV-RF-1 CLOSE SETPOINT RESET	CV-1_CLOSE RATE_SETPOINT			X				
AIRCRAFT RINSE WATER SYSTEM (CV-RF-2)								
CV-RF-2 CONTROL PANEL	CV-2_OC		X		X		HIGH	
CV-RF-2 STATUS	CV-2_STATUS		X				HIGH	
CV-RF-2 ALARM	CV-2_ALARM		X			X	HIGH	
CV-RF-2 OPEN SETPOINT RESET	CV-2_OPEN RATE_SETPOINT			X				
CV-RF-2 CLOSE SETPOINT RESET	CV-2_CLOSE RATE_SETPOINT	X						
RINSE WATER DISCHARGE PUMPS (VTP-1)								
XXP-X STATUS	XXP-X_STATUS		X			X	HIGH	
PUMP HOUSE HEAT (UH-2)								
EUH-2 START/STOP	EUH-2_SS				X			
EUH-2 STATUS	EUH-2_STATUS		X			X	HIGH	
ZONE TEMP (PUMP HOUSE)	PUMP HOUSE_Z_T-1	X				X	HIGH	

L:\PROJECTS\214024 - Navy - 11D008 - NASWI P252 Hangar\Drawings\Controls\[arf-points.xls]POINTS

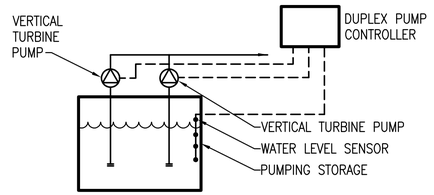

RINSE WATER DISCHARGE PUMPS (VTP-1) CONTROL SEQUENCE:

A. VTP-1/ PUMPING STORAGE CONTROL SEQUENCE: DISCHARGE PUMP/PUMPING STORAGE CONTROL PANEL WILL OPERATE DUPLEX VERTICAL TURBINE PUMP TO MAINTAIN WATER LEVEL IN THE PUMPING STORAGE. PUMPS WILL OPERATE IN LEAD/STANBY ARRANGEMENT. IF THE LEAD PUMP FAILS TO OPERATE, THE CONTROL PANEL WILL ALARM TO THE DDC SYSTEM, START THE STANDBY PUMP AND SHUT OFF THE LEAD PUMP. PUMPS SHALL ALTERNATE BETWEEN LEAD AND STANDBY AFTER EACH PUMPING CYCLE. DDC SYSTEM TO MONITOR GENERAL ALARM FROM PUMP/PUMPING STORAGE CONTROL PANEL. THE CONTROL PANEL WILL ALARM TO THE DDC SYSTEM IF THE WATER LEVEL IN THE PUMPING STORAGE REACHES THE EMERGENCY PUMP LEVEL, START THE STANDBY PUMP AND SHUT OFF THE LEAD PUMP WHEN THE WATER LEVEL REACHES THE PUMP START LEVEL SHUT OFF THE LEAD PUMP. SEE DETAIL B1/P-501 FOR PUMPING LEVELS. FOR PUMP SCHEDULES SEE P-602.

PUMP HOUSE HEAT CONTROL DIAGRAM

SCALE: NONE

B3

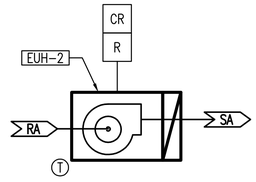

PUMP HOUSE ROOM 101 CONTROL SEQUENCE:

A. GENERAL: AN ELECTRIC UNIT HEATER SERVES THE ROOM. THE DDC OPERATES, SCHEDULES TEMPERATURE SET POINTS AND PROVIDES ALARMS.

HEATING MODE: THE UNIT MAINTAINS A SPACE SET POINT OF 45 DEG F FOR HEATING.

EUH-2 (PUMP ROOM, ROOM 101) CONTROL DIAGRAM

SCALE: NONE

A3

APPR | DATE | DESCRIPTION | SYM

NAVFAC

LARRY D. SWARTZ — STATE OF WASHINGTON — 27501 — REGISTERED PROFESSIONAL ENGINEER

2-18-15 SEAL

notkin
mechanical engineers
www.notkin.com
telephone: 206.448.1911
facsimile: 206.448.9485
2301 5th Avenue, Suite 401
Seattle, WA 98121

Contact: Larry Swartz, P.E.
notkin#: 214024
A/E INFO

APPROVED

FOR COMMANDER NAVFAC 3/2/15

ACTIVITY

NAS WHIDBEY ISLAND

SATISFACTORY TO DATE

DES: BCD | DRW: JML | CHK: LDS

<<PM/DM>> JOSEPH KISIDAY

BRANCH MANAGER

CHIEF ENG/ARCH

<<XXX>>

DEPARTMENT OF THE NAVY
NAVAL FACILITIES ENGINEERING COMMAND ~ NORTHWEST
NAVAL AIR STATION WHIDBEY ISLAND

NAVAL FACILITIES ENGINEERING COMMAND ~ NORTHWEST
AULT FIELD - OAK HARBOR, WA

NAVAL AIR STATION WHIDBEY ISLAND
OAK HARBOR, WA

FY-15 MCON PROJECT P-259 P-8A AIRCRAFT APRON EXPANSION - PART A

AIRCRAFT RINSE FACILITY CONTROLS

SCALE: AS NOTED

EPROJECT NO.:

CONSTR. CONTR. NO.
N44255-15-C-6003

NAVFAC DRAWING NO.
16030488

SHEET 234 OF 302

M-841

DRAWFORM REVISION: 10 MARCH 2009

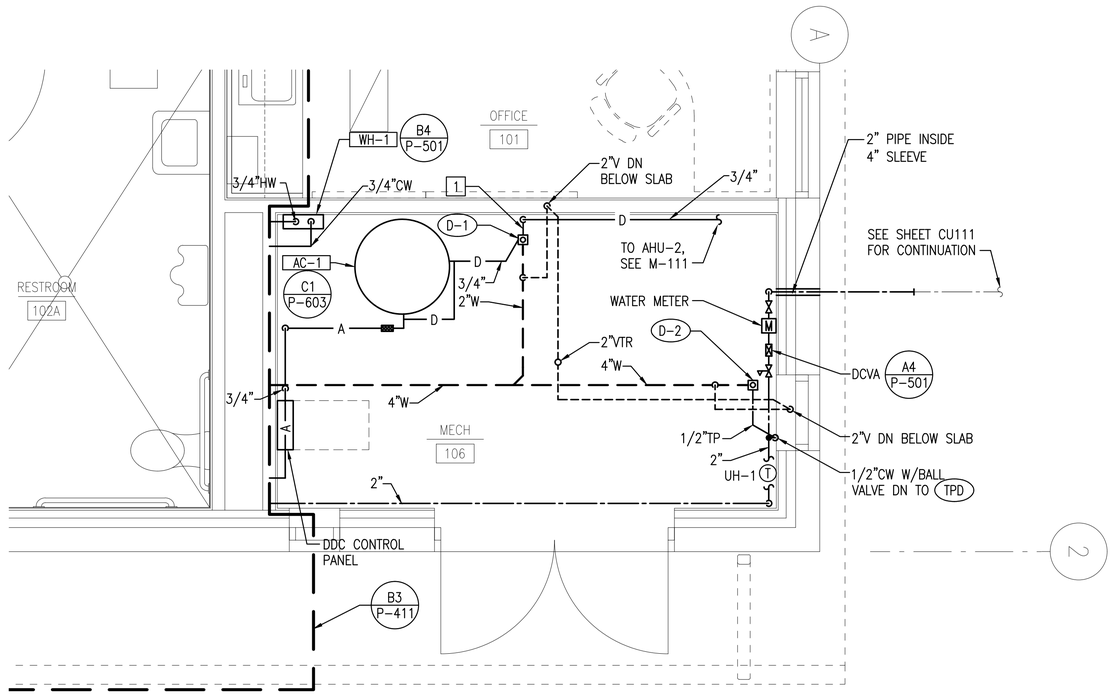

LOX PLANT ENLARGED MECHANICAL ROOM PLAN

SCALE: 1/2"=1'-0"

M-111, P-111, PS111 C3

SHEET KEY NOTES:

1 ROUTE TO DRAIN LEAVING AHU-2, 2" AIR GAP.

1/2" = 1'-0"

0 2 4 6

APPR	DATE	DESCRIPTION	SYM

NAVFAC

LARRY D. SWARTZ — STATE OF WASHINGTON — 27501 — REGISTERED PROFESSIONAL ENGINEER

2-18-15 SEAL

notkin
mechanical engineers
www.notkin.com
telephone: 206.448.1911
facsimile: 206.448.9485
2301 5th Avenue, Suite 401
Seattle, WA 98121

Contact: Larry Swartz, P.E.
notkin#: 214024
A/E INFO

APPROVED

FOR COMMANDER NAVFAC 3/2/15

ACTIVITY
NAS WHIDBEY ISLAND

SATISFACTORY TO DATE

DES: BCD | DRW: JML | CHK: LDS

<<PM/DM>> JOSEPH KISIDAY

BRANCH MANAGER

CHIEF ENG/ARCH

<<XXX>>

DEPARTMENT OF THE NAVY
NAVAL FACILITIES ENGINEERING COMMAND
NAVAL AIR STATION WHIDBEY ISLAND

NAVAL FACILITIES ENGINEERING COMMAND ~ NORTHWEST
AULT FIELD ~ OAK HARBOR, WA

NAVAL AIR STATION WHIDBEY ISLAND
OAK HARBOR, WA

FY-15 MCON PROJECT P-259 P-8A AIRCRAFT
APRON EXPANSION - PART A

LOX PLANT ENLARGED MECHANICAL ROOM PLAN

SCALE: AS NOTED

EPROJECT NO.:

CONSTR. CONTR. NO.
N44255-15-C-6003

NAVFAC DRAWING NO.
16030489

SHEET 235 OF 302

MP411

DRAWFORM REVISION: 10 MARCH 2009

L:\PROJECTS\214024 - Navy - 11TO08 - NASWI P252 Hangar\Drawings\Part A\MP411.dwg, 2/12/2015 6:22:14 PM, lr