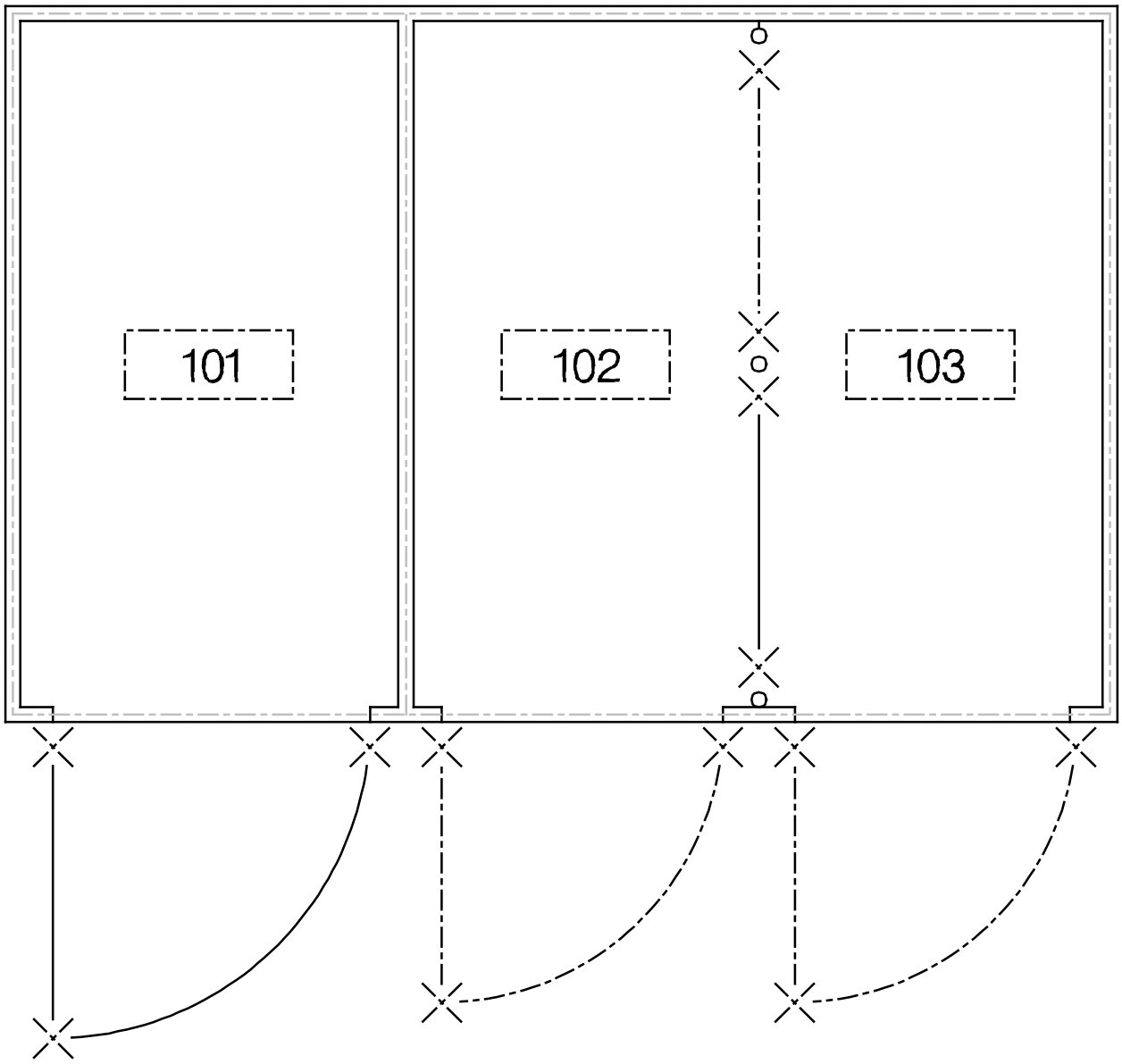

BUILDING 2707

FIRST FLOOR PLAN

B 2707 CB's

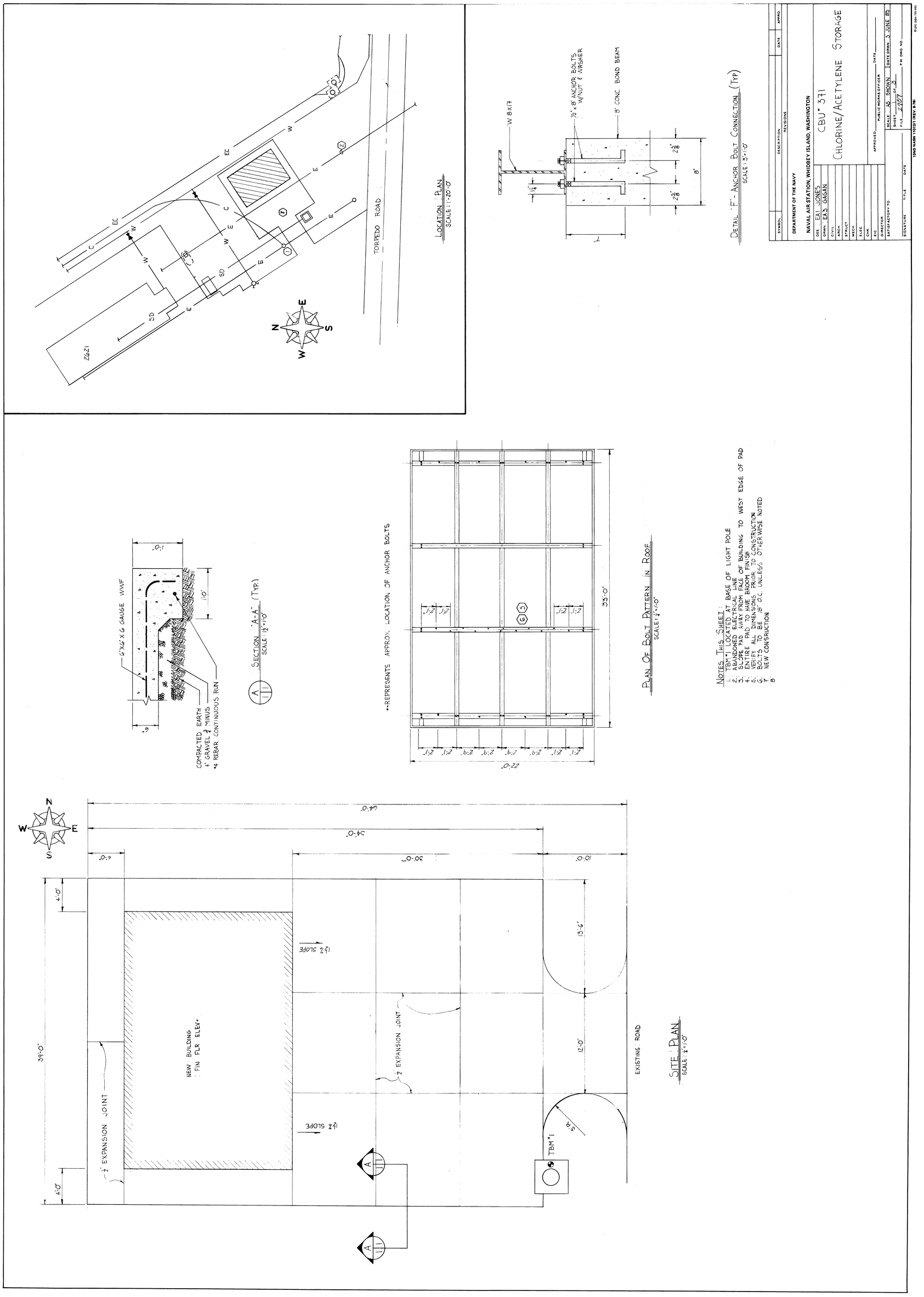
LOCATION PLAN
SCALE: 1"=20'-0"
TORPEDO ROAD
2621
DETAIL "F" - ANCHOR BOLT CONNECTION (TYP)
SCALE: 3"=1'-0"
W 8X17
1/2" x 8" ANCHOR BOLTS W/NUT & WASHER
8" CONC. BOND BEAM
SECTION "A-A" (TYP.)
SCALE: 1 1/2"=1'-0"
6"X6"X6 GAUGE WWF
COMPACTED EARTH
4" GRAVEL 3/4" MINUS
#4 REBAR CONTINUOUS RUN
•-REPRESENTS APPROX. LOCATION OF ANCHOR BOLTS
PLAN OF BOLT PATTERN IN ROOF
SCALE: 1/4"=1'-0"
NOTES THIS SHEET:
1. TBM #1 LOCATED AT BASE OF LIGHT POLE
2. ABANDONED ELECTRICAL LINE
3. SLOPE PAD AWAY FROM FACE OF BUILDING TO WEST EDGE OF PAD
4. ENTIRE PAD TO HAVE BROOM FINISH
5. VERIFY ALL DIMENSIONS PRIOR TO CONSTRUCTION
6. BOLTS TO BE 18" O.C. UNLESS OTHERWISE NOTED
7. NEW CONSTRUCTION
SITE PLAN
SCALE: 1/4"=1'-0"
NEW BUILDING FIN FLR ELEV.
1/2" EXPANSION JOINT
EXISTING ROAD
TBM #1
64'-0"
54'-0"
39'-0"
30'-0"
10'-0"
13'-6"
12'-0"
33'-0"
22'-0"
DEPARTMENT OF THE NAVY
NAVAL AIR STATION, WHIDBEY ISLAND, WASHINGTON
CBU # 371
CHLORINE/ACETYLENE STORAGE
DES. EA1 JONES
DRWN. EA3 GAGAN
SCALE AS SHOWN
DATE DRWN. 5 JUNE 85
SHEET 1 OF 3
FILE 2707
13ND NASW 1101/2/1 (REV. 8-79)

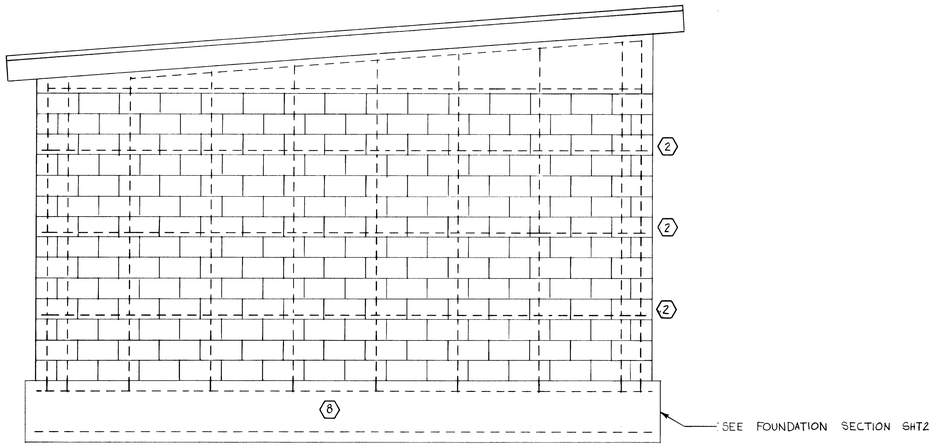

TYPICAL RE-BAR PATTERN NORTH & SOUTH ELEVATION
SCALE : 1/2"=1'-0"

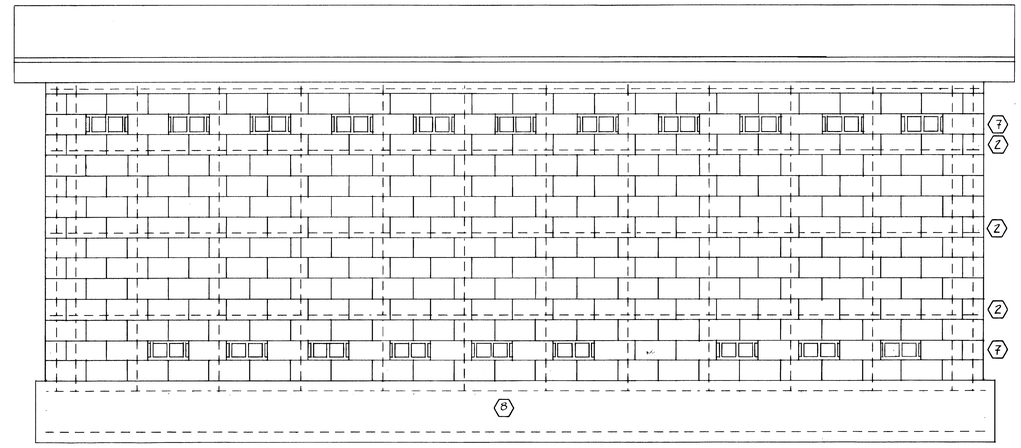

EAST ELEVATION
SCALE : 1/2"=1'-0"

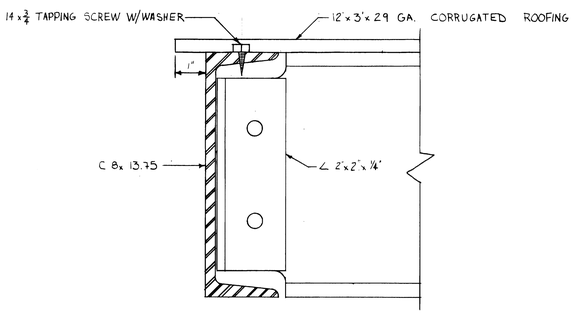

DETAIL "E" - ROOFING TO CHANNEL CONNECTION (TYP)
SCALE : 1/2"=1"

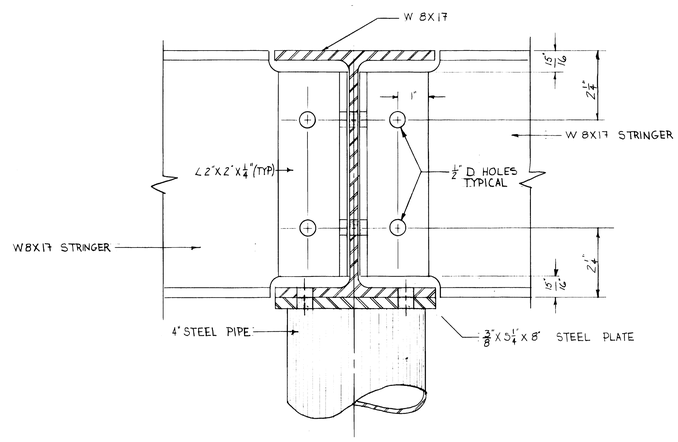

DETAIL "C" - BEAM TO POST CONNECTION (3)
SCALE : 1/2"=1"

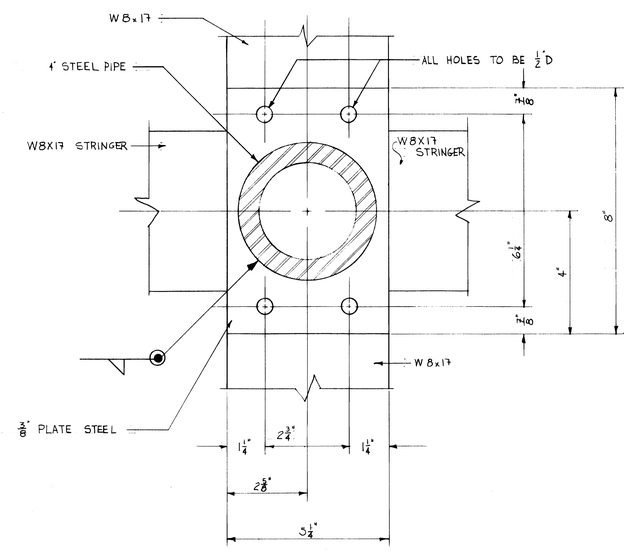

DETAIL "C-1" - BEAM TO POST CONNECTION (3)
SCALE : 1/2"=1"

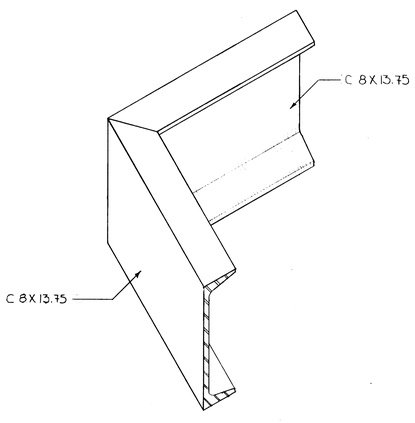

DETAIL "D-1" CHANNEL CORNER CONNECTION
SCALE : 3"=1'-0"

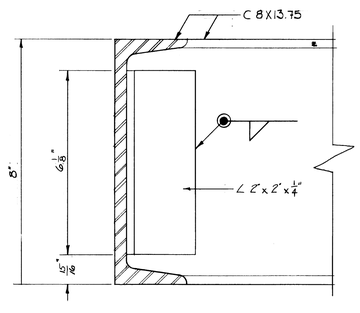

DETAIL "D" CHANNEL CORNER CONNECTION (4)
SCALE : 1/2"=1"

SYMBOL	DESCRIPTION	DATE	APPRD.
	REVISIONS		

DEPARTMENT OF THE NAVY

NAVAL AIR STATION, WHIDBEY ISLAND, WASHINGTON

DES EAI JONES
DRWN EA3 GAGAN
CIVIL
ARCH
STRUCT
MECH
ELEC
CHK
EIC
DIRECTOR

CBU #371
CHLORINE/ACETYLENE STORAGE

APPROVED _____ DATE _____
PUBLIC WORKS OFFICER

SATISFACTORY TO:
SIGNATURE TITLE DATE

SCALE AS SHOWN | DATE DRWN. 5 JUNE 85
SHEET 3 OF 3
FILE _____ P.W. DWG. NO _____

13ND NASW 11012/1 (REV. 9-79) GPO 1984-755-590

File 2707

Chlorine/Acetylene Storage
1985
3 of 3

2707

CB's

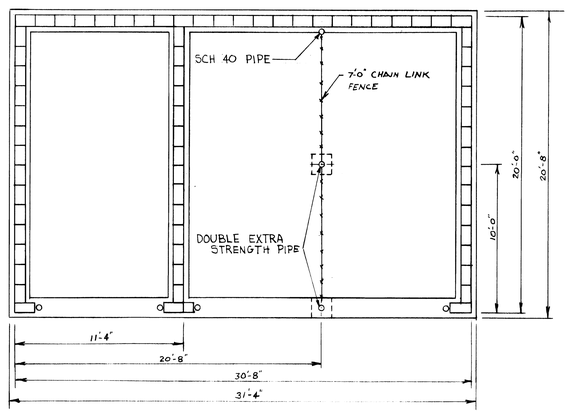

FLOOR PLAN
SCALE: 1/4" = 1'-0"

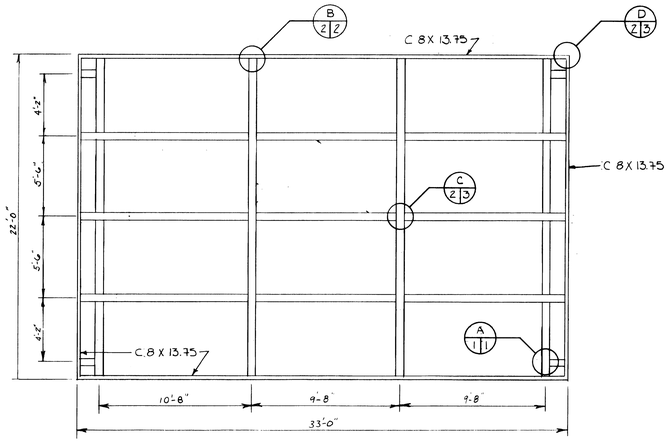

ROOF DETAIL
SCALE: 1/4" = 1'-0"

NOTES

1. #4 REINFORCING STEEL TO BE 2'-6" O.C. IN VERTICAL RUNS IN WALLS AND DOUBLED ON CORNERS.
2. BLOCK BOND BEAMS EVERY 4TH COURSE W/ 2-#4 REIN. STEEL IN EACH.
3. 8" CMU TO BE USED.
4. COLUMN FOOTINGS FOR STEEL POSTS ARE 2'-0" x 2'-0" x 1'-0"
5. SET GATE POSTS TO FIT 8'-0" GATE.
6. ALL WALLS TO BE CORE FILLED.
7. THE 2ND COURSE AND THE 11TH COURSE OF CMU WILL BE LAID ON ITS SIDE WHERE VERTICAL REIN. STEEL DOES NOT INTERFERE, TO ALLOW FOR VENTILATION. (ON EAST WALL ONLY.)
8. HORIZONTAL JOINT REINFORCEMENT TO BE USED EVERY 2ND COURSE.
9. THE BONDING OF INTERSECTING WALLS WILL HAVE METAL LATH OR HARDWARE CLOTH EVERY SECOND COURSE.
10. 8" I-BEAMS TO BE ANCHORED TO BOND BEAMS WITH 8" ANCHOR BOLTS, 18" O.C.
11. ALL STEEL TO BE RED LEADED AND PAINTED.
12. THE STEEL SIZES SPECIFIED ARE NOT TO BE SUBSTITUTED.
13. FENCE GATES ARE 7'-0" HIGH.
14. GATE POSTS ARE 4" O.D.
15. ALL JOINTS WILL BE BOLTED AND WELDED.
16. 1" EYES TO BE PLACED 3'-0" ABOVE FLOOR, AND 4'-0" O.C. ALONG INSIDE WALLS OF BLDG.
17. STEEL SHOP TO FABRICATE GATE LATCHES TO FIT 4½" O.D PIPE
18. ALL VERTICAL REBAR TO BE TIED TO HORIZONTAL REBAR
19. CORRUGATED ROOFING TO HAVE 1" MINIMUM OVERHANG
20. UNLESS OTHERWISE NOTED ALL STEEL IN ROOF TO BE W8X17 W/C 8X13.75 ON OUTSIDE EDGE
21. CHECK AND VERIFY ALL DIMENSIONS PRIOR TO CONSTRUCTION

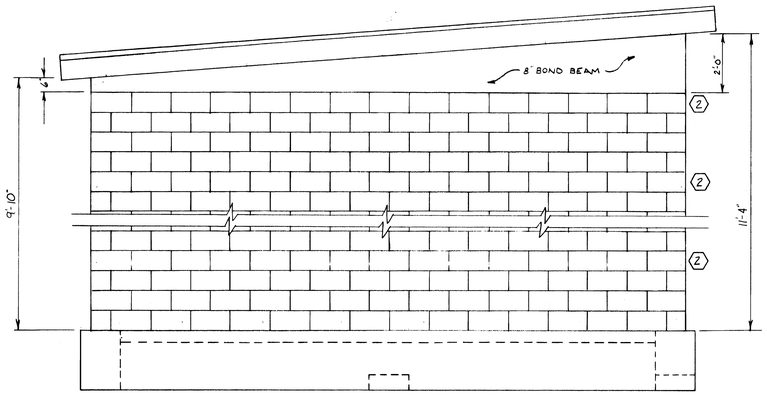

NORTH ELEVATION
SCALE: 1/2" = 1'-0"

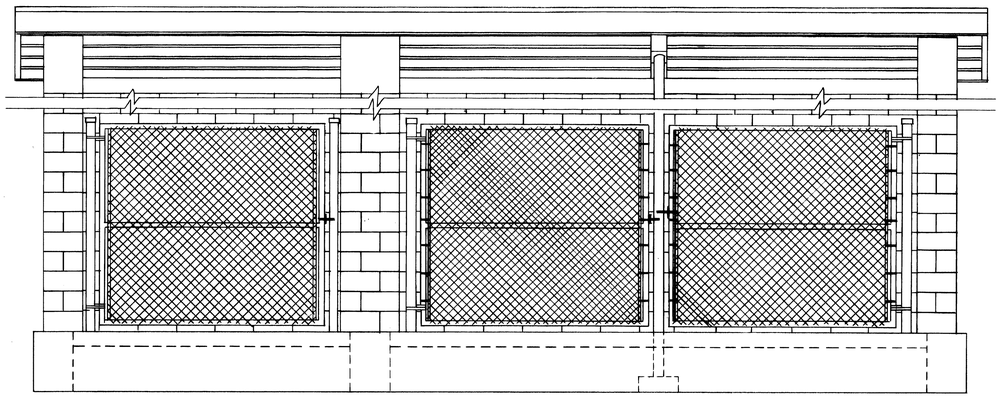

WEST ELEVATION
SCALE: 1/2" = 1'-0"

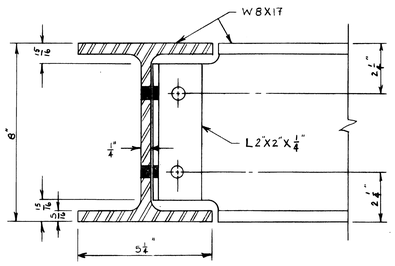

DETAIL 'A' - CONNECTION FOR ROOF (W8X17)
NTS

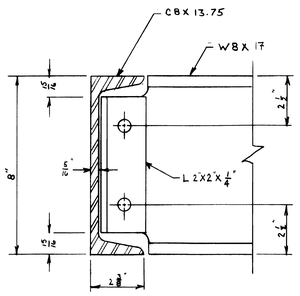

DETAIL 'B' - CONNECTION FOR ROOF (C8X13.75)
NTS

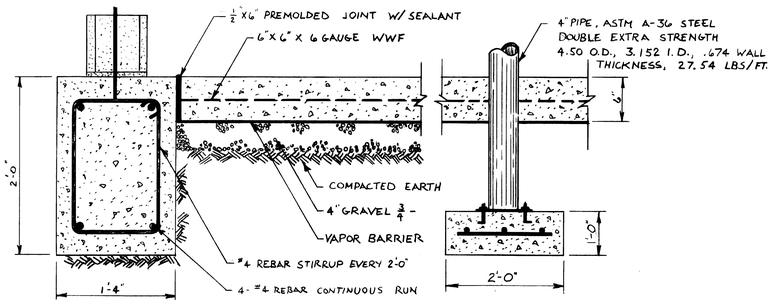

SECTION - FOUNDATION
SCALE: 1½" = 1'-0"

20'X30' CHLORINE / ACETYLINE STORAGE SHED

DWN BY:	CBU 417
APP BY:	
APP BY:	
APP BY:	SCALE: AS SHOWN / DATE: 8 JAN 85
	SATISFACTORY TO:

File 2707

Chlorine/Acetylene Storage
Shed
1985
1 of 1

82707

CB's