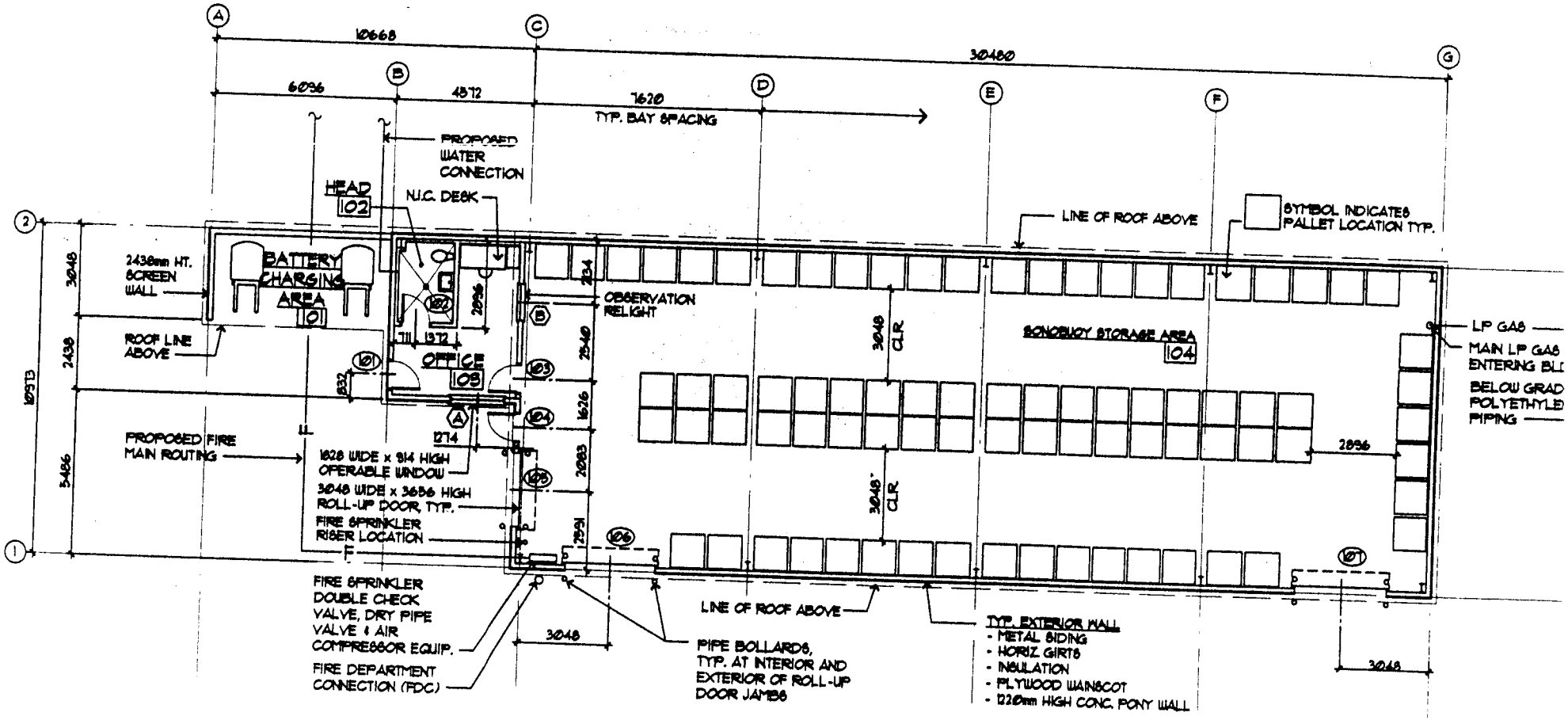

FLOOR PLAN

SCALE: 1:100

B2800

DOOR SCHEDULE

NUMBER	DOOR FRAME	DOOR WIDTH	DOOR TYPE	DOOR MATERIAL	OPENINGS LOUVER	OPENINGS GLAZING	REMARKS
01	M	914	A	M	-	[illegible]	

FINISH SCHEDULE

ROOM NAME	NUMBER	FLOOR	BASE north	BASE south	BASE west	BASE east	WAINSCOT north	WAINSCOT south	WAINSCOT west	WAINSCOT east	WAINSCOT height	WALLS north	WALLS south	WALLS west	WALLS east	CEILING height	CEILING mat'l	REMARKS
BATT. CHARGING AREA	101	CONC.	-	-	-	-												

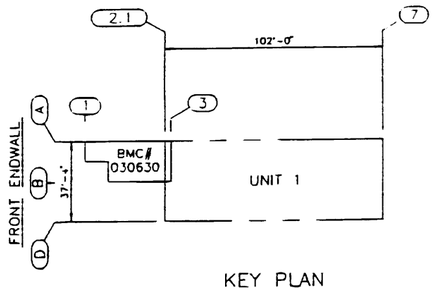

KEY PLAN

SPECIFIC ERECTION DRAWING LIST

THE DRAWINGS LISTED BELOW HAVE BEEN CREATED BY COMPUTER SPECIFICALLY FOR YOUR ORDER TO ASSIST YOU IN PUTTING UP YOUR BUILDING. THESE SPECIFIC ERECTION DRAWINGS ARE THE SAME SIZE AS THIS SHEET AND CAN BE IDENTIFIED INDIVIDUALLY FROM THE TITLES AND DRAWING SEQUENCE NUMBERS THAT APPEAR IN THE LOWER RIGHT HAND CORNER OF EACH DRAWING.

DRAWING TITLE:		AG FILE NO.:
ROOF SECONDARY STRUCTURAL FRAMING PLAN	DATE: 02/16/83	
	DRAWING NUMBER: D 83-123456-05L	REVISION 02

TITLE

THE YEAR DURING WHICH YOUR ORDER WAS ENTERED

THE BUTLER ORDER NUMBER OF YOUR ORDER

DRAWING SEQUENCE NUMBER

REVISION LEVEL OF THE DRAWING. IF THE DRAWING HAS NEVER BEEN REVISED, 00 APPEARS HERE.

D97-030629-00 COVER DRAWING - SHEET 1
D97-030629-01 SPECIFIC ANCHOR BOLT DRAWING - SHEET 1
D97-030629-01A SPECIFIC REACTION DRAWING - SHEET 2
~~D97-030629-01B ANCHOR BOLT DETAIL SHEET - SHEET 3~~
D97-030629-02 CROSS SECTION ERECTION DRAWING - SHEET 1
D97-030629-02A CROSS SECTION ERECTION DRAWING - SHEET 2
D97-030629-02B CROSS SECTION ERECTION DRAWING - SHEET 3
D97-030629-02C CROSS SECTION ERECTION DRAWING DETAIL SHEET - SHEET 4
D97-030629-03 WIND BRACING DRAWING - SHEET 1
D97-030629-03A WIND BRACING DETAIL SHEET - SHEET 2
D97-030629-04 ROOF SECONDARY STRUCTURAL FRAMING PLAN - SHEET 1
D97-030629-04A ROOF SECONDARY STRUCTURAL DETAIL SHEET - SHEET 2
D97-030629-05 WALL SECONDARY STRUCTURAL ELEVATION - SHEET 1
D97-030629-05A WALL SECONDARY STRUCTURAL ELEVATION - SHEET 2
D97-030629-05B DOOR DETAIL DRAWING - SHEET 3
D97-030629-05C WALL SECONDARY STRUCTURAL ELEVATION DETAIL SHEET - SHEET 4
~~D97-030629-05D WALL SECONDARY STRUCTURAL ELEVATION DETAIL SHEET - SHEET 5~~
D97-030629-06 WALL PANEL DRAWING - SHEET 1
~~D97-030629-06A WALL PANEL DRAWING - SHEET 2~~
D97-030629-07 ROOF PANEL DRAWING - SHEET 1
D97-030629-07A EDGE OF ROOF DETAIL SHEET - SHEET 2

SUPPLEMENTING THE SPECIFIC ERECTION DRAWINGS LISTED ARE SEVERAL GENERAL ERECTION DRAWINGS CALLED "PLANOGRAPHS". SEE THE DRAWING MANIFEST FOR A COMPLETE LIST OF THESE DRAWINGS.

FIELD WORK SUMMARY

WALL SECONDARY
FW0040 FIELD CUT AND LOCATE HOLES IN DOOR POST

COVER DRAWING NOTES

STANDARD NOTES:

CD0001 ATTACH PATENT PLATE 007849 TO THE WEB OF AN INTERMEDIATE FRAME COLUMN AT EYE LEVEL.

CD0002 PARTS SHOWN MAY BE UPGRADED DUE TO STANDARDIZED FABRICATION. REFER TO THE SHIPPING MANIFEST FOR POSSIBLE SUBSTITUTIONS.

CD0010 MATERIALS

	ASTM DESIGNATION	
STRUCTURAL STEEL PLATE	A-529	FY= 50KSI (GRADE 50)
LIGHT GAGE/COLD FORMED	A-570	FY= 55KSI (GRADE 55)
BRACE RODS 3/4" & LESS	A-108	GRADE 1018
BRACE RODS OVER 3/4"	A-572	GRADE 50 OR GREATER
HOT ROLLED MILL SHAPES	A-36; A-572	FY= 36KSI; FY=50KSI
ROOF AND WALL PANELS	A-446	GRADE 45 OR GREATER
BOLTS	A-307 AND A-325	

CD0011 HIGH STRENGTH BOLTING:

ALL HIGH STRENGTH BOLTS ARE A-325-T WITH HEAVY HEX NUTS AND ARE TO BE INSTALLED USING THE "TURN-OF-THE-NUT" METHOD SPECIFIED IN THE NINTH EDITION OF THE AISC "SPECIFICATION FOR STRUCTURAL JOINTS USING ASTM A325 OR A490 BOLTS" PER SECTION 8.0 (1). A-325 BOLTS MAY BE INSTALLED WITHOUT WASHERS WHEN TIGHTENED BY THE "TURN-OF-THE-NUT" METHOD. IT IS THE RESPONSIBILITY OF THE ERECTOR TO ASSURE PROPER TIGHTNESS. SEE INSTALLATION OF A-325T BOLT DRAWING B-1080268 (GROUP 78-052-01).

CD0013 IF THESE DRAWINGS ARE SEALED, THE SEAL APPLIES ONLY TO THE MATERIALS SUPPLIED BY BUTLER MFG. CO. AND IS NOT INTENDED AS THE SEAL OF THE ENGINEER OF RECORD FOR THE ENTIRE PROJECT.

SPECIAL NOTES:

CD00100 ALL BOLTED CONNECTIONS, UNLESS NOTED, ARE DESIGNED AS BEARING TYPE CONNECTIONS WITH BOLT THREADS NOT EXCLUDED FROM THE SHEAR PLANE.

AS-BUILT

FINAL SET OF DWGS TO BE USED FOR ERECTION
ENGINEER: B.K PH# 5372
DETAILER: CLARENCE PH# 5365
CHECKER: MIKE PH# 5376
SHIPPING: GARY C. PH# 651-5336

BK CC MIKE

REVISION NO. 1	REVISION NO. 2							
DATE: 04-20-98	DETAILING	DATE:	BUTLER MANUFACTURING COMPANY GENERAL OFFICES KANSAS CITY, MISSOURI	PRODUCT OF THE PRONTO ORDER ENGINEERING SYSTEM	BUILDER: STEELCRAFT CONSTRUCTION WOODINVILLE, WA	PROJECT: SONOBUOY STORAGE FAC POULSBO, WA.	BUILDING ORDER DESCRIPTION: 37X102X16 LRF 25# Roof SL + 3#CLL 80 MPH EXP C UBC 94 SEISMIC ZONE 3	DRAWING TITLE: COVER DRAWING

AG FILE NO:
GROUP: V
DATE: 12/10/97
DRAWING NUMBER: D97-030629-00
REV. 01

NAME: Lowry Shamrouch 12-11-1997 09:53:17 Y:\9\03062901

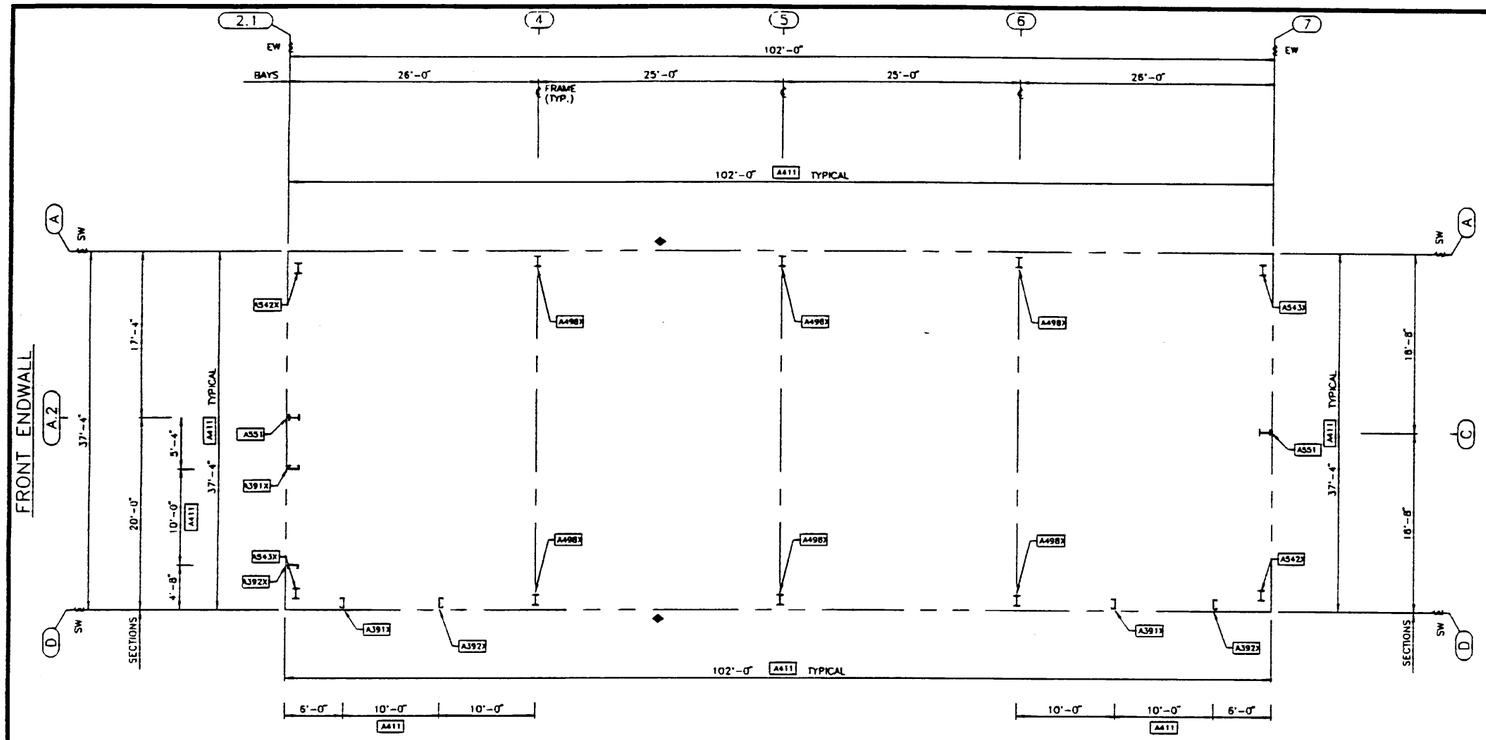

UNIT 1 ANCHOR BOLT PLAN

STANDARD NOTES:

A80007 GIVE TOP OF FOUNDATION A TROWEL FINISH. THE FOUNDATION MUST BE SQUARE, LEVEL, AND SMOOTH.

A80009 ANCHOR BOLTS MUST BE LOCATED BY MEANS OF A TEMPLATE. DO NOT HAND SET ANCHOR BOLTS.

A80010 ANCHOR BOLTS, NUTS AND WASHERS MUST BE ASTM TYPE A307.

A80013 USE REINFORCING STEEL AS REQUIRED. PROVIDE FOR HORIZONTAL LOAD ON ANCHOR BOLTS.

A80014 C A U T I O N
****
RIGID FRAMES HAVE BOTH HORIZONTAL AND VERTICAL REACTIONS ACTING AT THE BASE OF THE COLUMN. IN SOME CASES THE HORIZONTAL FORCE IS GREATER THAN THE VERTICAL. A FOUNDATION DESIGNED FOR A CONVENTIONAL STRUCTURE WILL NOT BE SATISFACTORY. FAILURE TO MAKE ADEQUATE PROVISION FOR THE HORIZONTAL THRUST CAN RESULT IN FOUNDATION FAILURE.

A80015 FOUNDATION DESIGN AND ANCHOR BOLTS, NUTS AND WASHERS ARE NOT FURNISHED BY BUTLER. PROPER EMBEDMENT LENGTH MUST BE DESIGNED BY FOUNDATION DESIGN ENGINEER.

A80016 REFER TO WALL PANEL ANCHOR BOLT DRAWING FOR SPECIFIC EDGE OF FOUNDATION DETAILS.

A80017 THE SOLID BLACK <> SYMBOL DESIGNATES A BRACED BAY OR SECTION.

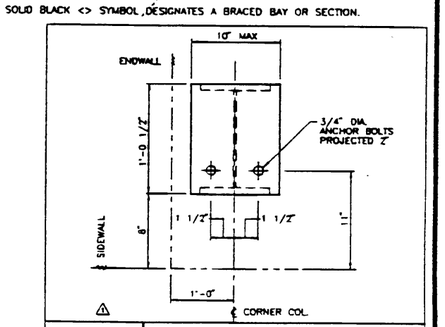

DETAIL A543X — CORNER COLUMN

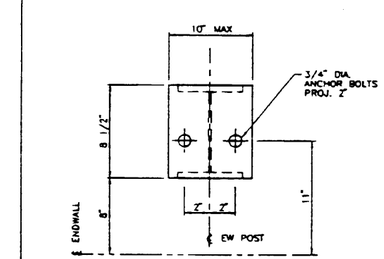

DETAIL A551 — ENDWALL POST

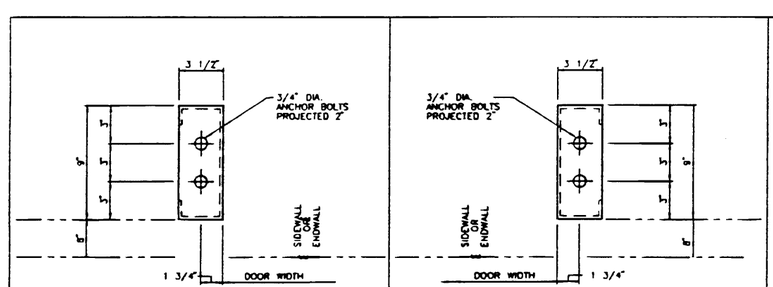

DETAIL A391X — 9" DOOR POST (LEFT)

DETAIL A392X — 9" DOOR POST (RIGHT)

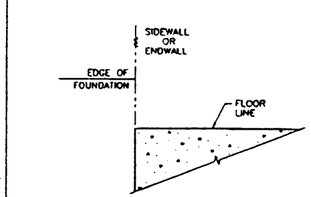

SECTION A411 — TYP. SECTION AT EDGE OF FOUNDATION UN-NOTCHED BASE

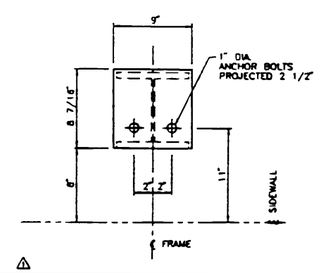

DETAIL A498X — SIDEWALL COLUMN

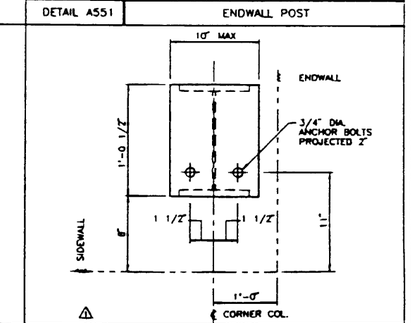

DETAIL A542X — CORNER COLUMN

REVISION NO. 1	REVISION NO. 2
DATE: 04-16-98; DRAWN BY: CBRENNEMAN; CHECKED BY:	DATE: ; DRAWN BY: ; CHECKED BY:
PER DRAWING APPROVAL BY BUILDER(03-09-98)	

BUTLER MANUFACTURING COMPANY
GENERAL OFFICES-KANSAS CITY, MISSOURI

PRODUCT OF THE PRONTO ORDER ENGINEERING SYSTEM

BUILDER:	PROJECT:	BUILDING ORDER DESCRIPTION:	DRAWING TITLE:	AG FILE NO:
STEELCRAFT CONSTRUCTION WOODINVILLE, WA.	SONOBUOY STORAGE FAC POULSBO, WA.	37X102X16 LRF 25# Roof SL + 3#CLL 80 MPH EXP C UBC 94 SEISMIC ZONE 3	SPECIFIC ANCHOR BOLT & DETAIL DRAWING	GROUP: V; DATE: 12/10/97; DRAWING NUMBER: D97-030629-01; REV. 01

USERNAME: C-Man 04-16-1998 10:13:11 Y:\3\0308291

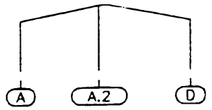

UNIT 1 – ENDWALL FRAME AT SIDEWALL GRID 2.1

		A		A.2			D	
		H	V	H	V	Z	H	V
DL	DEAD LOAD	0.04	1.13	-0.01	1.71	0.00	-0.02	0.57
CLL	COLLATERAL LOAD	0.03	0.94	-0.01	1.35	0.00	-0.02	0.39
SL	SNOW LOAD	0.25	14.54	-0.21	17.64	0.00	-0.18	3.20
WLL	WIND LOAD LEFT	-3.04	-0.73	-0.04	-1.65	0.00	-2.09	-0.48
WLR	WIND LOAD RIGHT	2.02	1.78	-0.04	-1.94	0.00	2.77	-3.02
IP	WIND INT PRESSURE	-0.03	0.43	-0.03	-1.68	0.00	0.27	-0.04
IS	WIND INT SUCTION	-0.38	0.22	-0.03	-0.73	0.00	-0.12	-2.71
EQ	SEISMIC LOAD	0.10	-0.07	0.00	0.14	0.00	0.01	-0.07
SLL	MIN SNOW LOAD LEFT	0.11	1.64	0.01	2.70	0.00	-0.12	-0.12
SLR	MIN SNOW LOAD RIGHT	0.15	-0.42	0.02	2.21	0.00	-0.17	3.40
EWP	EW WIND PRESSURE	0.88	-0.09	-0.03	-0.53	2.34	-1.03	-2.00
EWS	EW WIND SUCTION	0.88	-0.09	-0.03	-0.53	-2.05	-1.03	-2.00
	MAX. POS. REACTION	2.43	17.5	0.00	20.76	2.34	2.87	4.78
	MAX. NEG. REACTION	-3.01	-0.03	-0.11	-0.23	-2.05	-2.50	-2.46

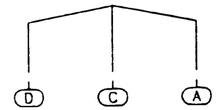

UNIT 1 – ENDWALL FRAME AT SIDEWALL GRID 7

		D		C		A	
		H	V	V	Z	H	V
DL	DEAD LOAD	0.03	0.51	1.20	0.00	-0.03	0.51
CLL	COLLATERAL LOAD	0.02	0.34	0.85	0.00	-0.02	0.34
SL	SNOW LOAD	0.19	2.79	7.03	0.00	-0.19	2.79
WLL	WIND LOAD LEFT	-2.79	-2.85	-4.17	0.00	-2.09	-0.20
WLR	WIND LOAD RIGHT	2.09	-0.20	-4.17	0.00	2.79	-2.85
IP	WIND INT PRESSURE	0.37	-2.22	-3.00	0.00	0.54	-0.19
IS	WIND INT SUCTION	-0.54	-0.19	-2.99	0.00	-0.37	-2.22
EQ	SEISMIC LOAD	-0.30	-0.25	0.00	0.00	-0.30	0.25
SLL	MIN SNOW LOAD LEFT	0.10	3.08	3.52	0.00	-0.10	-0.29
SLR	MIN SNOW LOAD RIGHT	0.10	-0.29	3.51	0.00	-0.10	3.08
EWP	EW WIND PRESSURE	1.02	-1.83	-2.85	2.30	-1.02	-1.83
EWS	EW WIND SUCTION	1.02	-1.83	-2.85	-2.02	-1.02	-1.83
	MAX. POS. REACTION	2.77	3.79	9.09	2.30	3.13	3.78
	MAX. NEG. REACTION	-3.13	-2.34	-2.97	-2.02	-2.77	-2.34

UNIT 1 – FRAME AT SIDEWALL GRIDS 4, 5 & 6

		A		D	
		H	V	H	V
DL	DEAD LOAD	0.48	1.80	-0.48	1.80
CLL	COLLATERAL LOAD	0.40	1.42	-0.40	1.42
SL	SNOW LOAD	3.31	11.89	-3.31	11.89
WLL	WIND LOAD LEFT	-7.01	-9.29	-2.20	-4.35
WLR	WIND LOAD RIGHT	2.20	-4.35	7.01	-9.29
IP	WIND INT PRESSURE	-0.56	-7.02	2.27	-3.21
IS	WIND INT SUCTION	-2.27	-3.21	0.56	-7.02
EQ	SEISMIC LOAD	-0.55	-0.46	-0.55	0.46
SLL	MIN SNOW LOAD LEFT	1.66	9.10	-1.66	2.79
SLR	MIN SNOW LOAD RIGHT	1.66	2.79	-1.66	9.10
EWP	EW WIND PRESSURE	0.76	-5.97	-0.76	-5.97
EWS	EW WIND SUCTION	0.76	-5.97	-0.76	-5.97
	MAX. POS. REACTION	7.00	15.11	6.53	15.11
	MAX. NEG. REACTION	-6.53	-7.49	-7.00	-7.49

BRACED BAY REACTION – UNIT 1

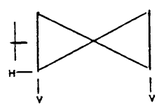

SIDEWALL GRID	BETWEEN GRIDS	H	V
A	4-5	4	3
D	4-5	4	3

REACTION NOTES:

1. THE VERTICAL (V) AND HORIZONTAL (H AND Z) REACTION ARE STATED IN KIPS. (1 KIP = 1000 POUNDS) POSITIVE DIRECTION IS AS SHOWN IN THE FOLLOWING DIAGRAM.
2. MOMENT REACTIONS ARE STATED IN INCH-KIPS AND ARE POSITIVE IN A CLOCKWISE DIRECTION.
3. THE FORCE ON THE ANCHOR BOLTS OR FOUNDATION WILL BE IN THE OPPOSITE DIRECTION TO THAT SHOWN.
4. MAXIMUM REACTION SUMMARY IS THE MAXIMUM POSITIVE AND NEGATIVE REACTIONS BASED ON THE REQUIRED LOAD COMBINATIONS.

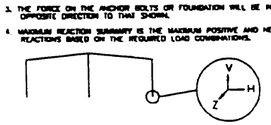

REVISION NO. 1		REVISION NO. 2	
DATE:		DATE:	
DRAWN BY:		DRAWN BY:	
CHECKED BY:		CHECKED BY:	

BUTLER MANUFACTURING COMPANY
GENERAL OFFICES-KANSAS CITY, MISSOURI

PRODUCT OF THE PRONTO ORDER ENGINEERING SYSTEM

BUILDER:	PROJECT:	BUILDING ORDER DESCRIPTION:	DRAWING TITLE:	AQ FILE NO:
STEELCRAFT CONSTRUCTION WOODINVILLE, WA.	SONOBUOY STORAGE FAC POULSBO, WA.	37X102X16 LRF 25# Roof SL + 3#CLL 80 MPH EXP C UBC 94 SEISMIC ZONE 3	SPECIFIC REACTION DRAWING	GROUP: V DATE: 12/10/97 DRAWING NUMBER: D97-030629-01A REV. 00

USERNAME: Bassam Karaan 12-12-1997 09:50:32 Y:\B\030629\A

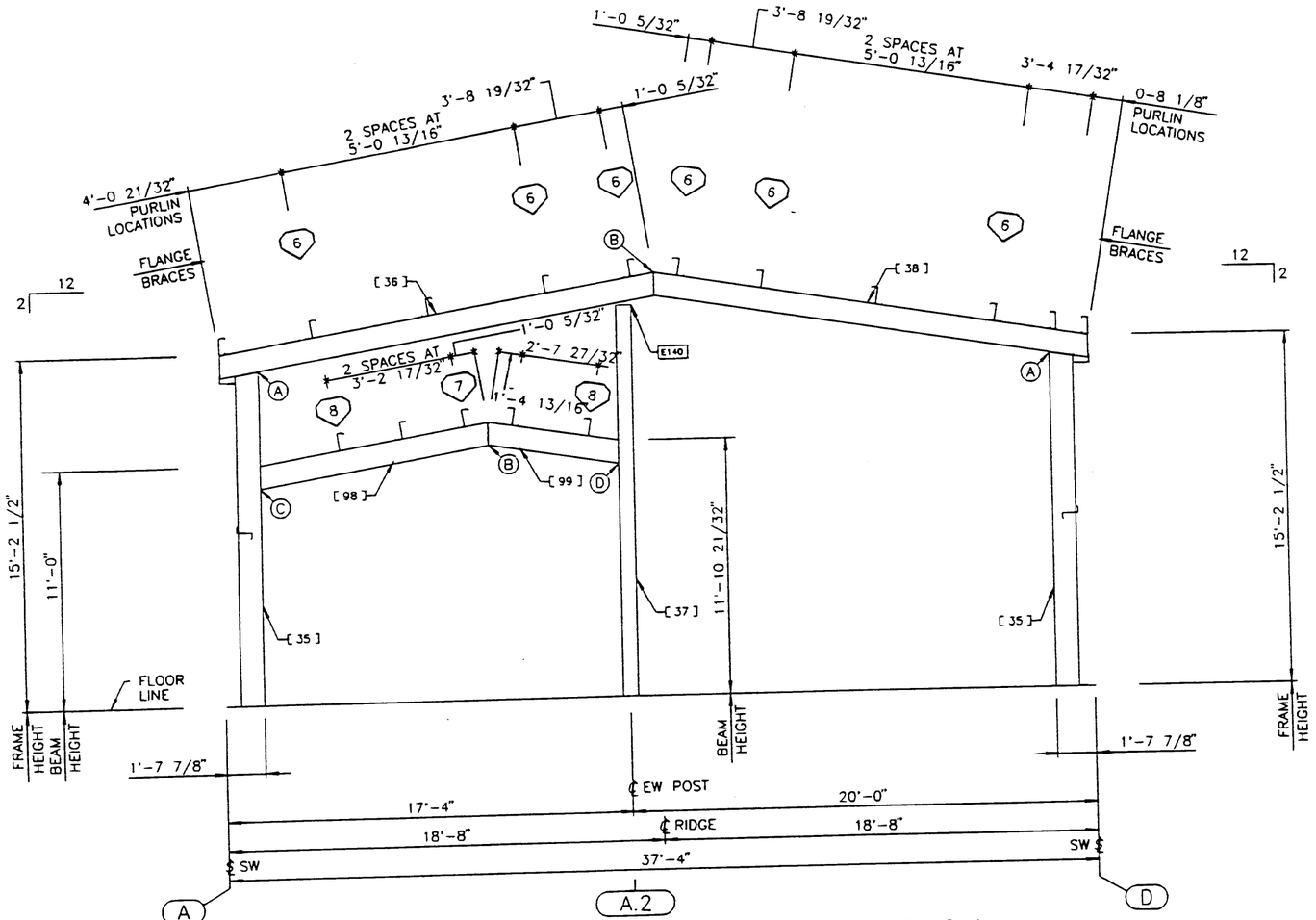

UNIT 1 FRONT EW ELEVATION AT GRID 2.1

PART SCHEDULE				
[ ]	PART NAME	PART NUMBER	PART LENGTH	FIELD WORK ▲
35	EW CORNER POST	V72220	14'-3 19/32"	
36	EW ROOF BEAM	V72225	18'-10 31/32"	
37	EW INTERM POST	V72230	16'-11 1/8"	
38	EW ROOF BEAM	V72235	18'-10 31/32"	
98	GABLE BEAM	V72226	9'-9 23/32"	
99	GABLE BEAM	V72227	5'-9 15/16"	

BOLTED CONNECTION SCHEDULE					
⬡	QUANTITY	BOLT NO.	DESCRIPTION	NUT NO.	DETAIL
A	08	097282	5/8X2-1/4 BOLT A325T	095233	
B	04	097282	5/8X2-1/4 BOLT A325T	095233	
C	06	097282	5/8X2-1/4 BOLT A325T	095233	CZ25
D	06	097284	3/4X2-1/2 BOLT A325T	095235	MB09

FLANGE BRACE SCHEDULE					
⬡	PART NO. FRONT/LEFT	PART NO. REAR/RIGHT	DIM. "Y"	DETAIL	FIELD WORK ▲
6	005660		1'-4 1/2"	C001	
7	005660		1'-4 1/2"	C001	
8	005673		2'-4 1/2"	C001	

STANDARD NOTES:

IF0001 ALL HIGH STRENGTH BOLTS ARE A-325-T WITH HEAVY HEX NUTS AND ARE TO BE INSTALLED USING THE "TURN-OF-THE-NUT" METHOD SPECIFIED IN THE NINTH EDITION OF THE AISC "SPECIFICATION FOR STRUCTURAL JOINTS USING ASTM A325 OR A490 BOLTS" PER SECTION 8 0 (1). A-325 BOLTS MAY BE INSTALLED WITHOUT WASHERS WHEN TIGHTENED BY THE "TURN-OF-THE-NUT" METHOD. IT IS THE RESPONSIBILITY OF THE ERECTOR TO ASSURE PROPER TIGHTNESS. SEE INSTALLATION OF A-325T BOLT DRAWING 1080268 (GROUP 78-052-01).

NOTE: FOR CONNECTION OF THE PURLINS TO THE GABLE BEAM, SEE BMC# 030630.

C6 BIC

REVISION NO. 1	REVISION NO. 2							
DATE: 04-17-98	DETAILING REVISION NO. 1	DATE:	BUTLER MANUFACTURING COMPANY GENERAL OFFICES-KANSAS CITY, MISSOURI	PRODUCT OF THE PRONTO ORDER ENGINEERING SYSTEM	BUILDER: STEELCRAFT CONSTRUCTION WOODINVILLE, WA.	PROJECT: SONOBUOY STORAGE FAC POULSBO, WA.	BUILDING ORDER DESCRIPTION: 37X102X16 LRF 25# Roof SL + 3#CLL 80 MPH EXP C UBC 94 SEISMIC ZONE 3	DRAWING TITLE: CROSS SECTION ERECTION DRAWING
DRAWN BY: CRAMACHE		DRAWN BY:						
CHECKED BY:		CHECKED BY:						

MLH

GROUP: V

AG FILE NO:

DATE: 12/10/97

DRAWING NUMBER: D97-030629-02

REV. 01

FRAME: C-Mch 04-17-1998 15:07:25 Y:\9\03062921

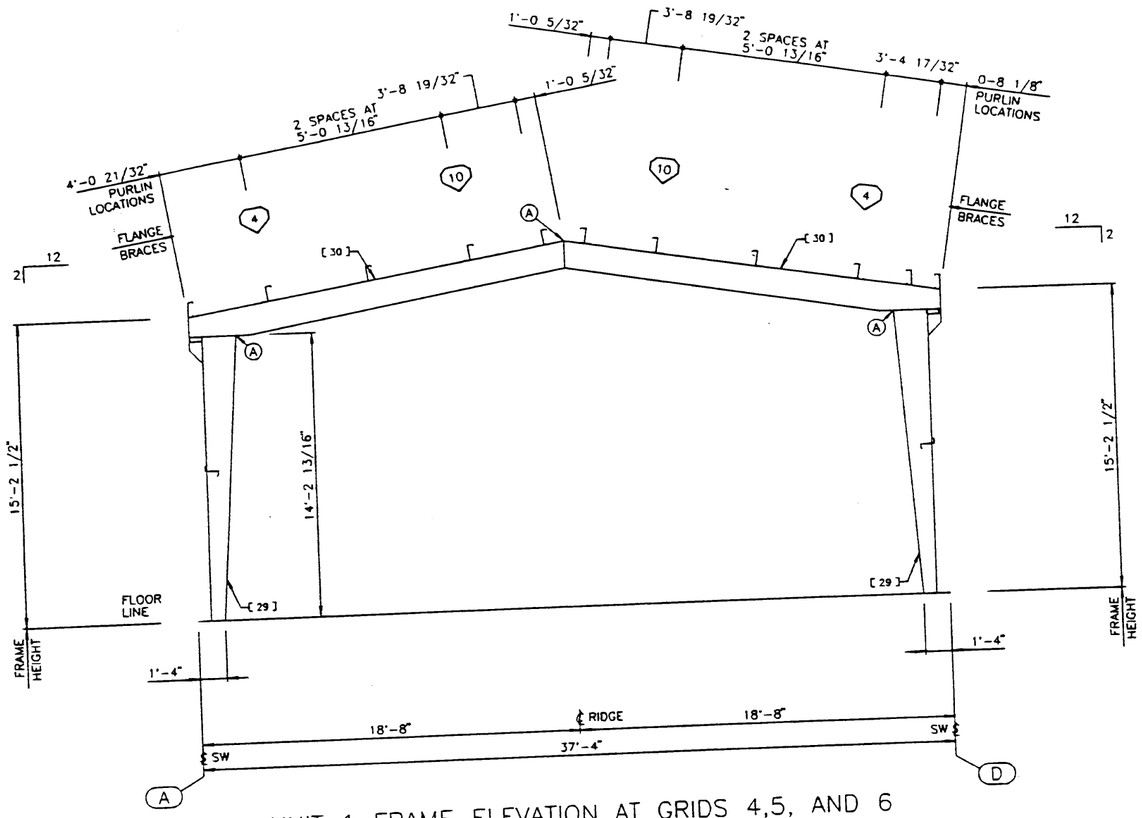

UNIT 1 FRAME ELEVATION AT GRIDS 4,5, AND 6

PART SCHEDULE				
[ ]	PART NAME	PART NUMBER	PART LENGTH	FIELD WORK ▲
29	EXTERIOR COLUMN	V72190	14'-2 13/16"	
30	ROOF BEAM	V72195	18'-10 31/32"	

BOLTED CONNECTION SCHEDULE					
○	QUANTITY	BOLT NO.	DESCRIPTION	NUT NO.	DETAIL
A	08	097282	5/8X2-1/4 BOLT A325T	095233	

FLANGE BRACE SCHEDULE					
○	PART NO. FRONT/LEFT	PART NO. REAR/RIGHT	DIM. "Y"	DETAIL	FIELD WORK ▲
4	005648		2'-4 1/2"	C001	
10	005679		2'-4 1/2"	C001	

Y:\9\030629A

04-17-1998 15:21:27

FRAME: C-USA

REVISION NO. 1		REVISION NO. 2	
DATE: 04-17-98	DETAILING REVISION NO. 1	DATE:	
DRAWN BY: CRISHAGAN		DRAWN BY:	
CHECKED BY:		CHECKED BY:	

BUTLER MANUFACTURING COMPANY
GENERAL OFFICES-KANSAS CITY, MISSOURI

PRODUCT OF THE PRONTO ORDER ENGINEERING SYSTEM

BUILDER: STEELCRAFT CONSTRUCTION WOODINVILLE, WA.

PROJECT: SONOBUOY STORAGE FAC POULSBO, WA.

BUILDING ORDER DESCRIPTION: 37X102X16 LRF 25# Roof SL + 3#CLL 80 MPH EXP C UBC 94 SEISMIC ZONE 3

DRAWING TITLE: CROSS SECTION ERECTION DRAWING

MLK Cb BK

GROUP: V

AG FILE NO:

DATE: 12/10/97

DRAWING NUMBER: D97-030629-02A

REV. 01

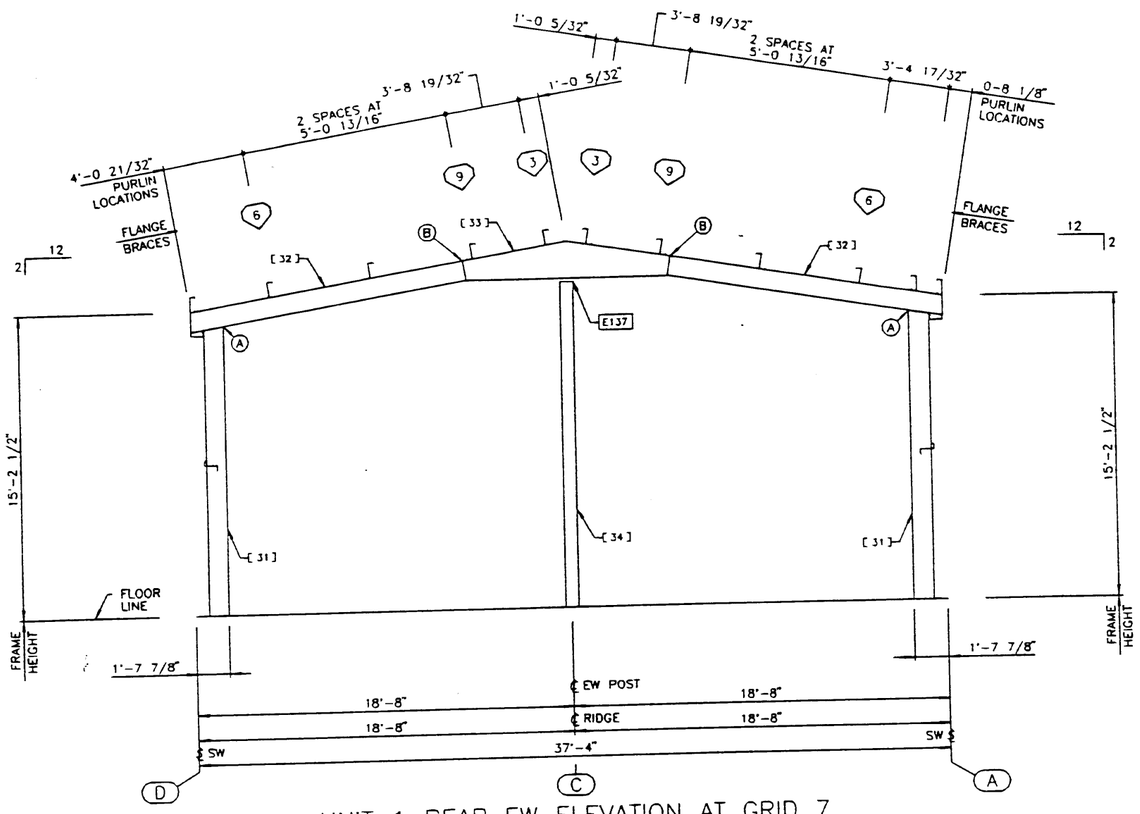

UNIT 1 REAR EW ELEVATION AT GRID 7

PART SCHEDULE				
[ ]	PART NAME	PART NUMBER	PART LENGTH	FIELD WORK ▲
31	EW CORNER POST	V72200	14'-3 19/32"	
32	EW ROOF BEAM	V72205	13'-8"	
33	EW ROOF BEAM	V72210	10'-4 1/4"	
34	EW INTERM POST	V72215	16'-3 21/32"	

BOLTED CONNECTION SCHEDULE					
○	QUANTITY	BOLT NO.	DESCRIPTION	NUT NO.	DETAIL
A	08	097282	5/8X2-1/4 BOLT A325T	095233	
B	04	097282	5/8X2-1/4 BOLT A325T	095233	

FLANGE BRACE SCHEDULE					
♡	PART NO. FRONT/LEFT	PART NO. REAR/RIGHT	DIM. "Y"	DETAIL	FIELD WORK ▲
3	005648		2'-4 1/2"	C002	
6	005660		1'-4 1/2"	C001	
9	005673		2'-4 1/2"	C001	

Y:\9\0306292B

04-17-1998 15:28:31

FILENAME: C-Main

REVISION NO. 1		REVISION NO. 2
DATE: 03-17-98	DETAILING REVISION NO. 1	DATE:
DRAWN BY: CRISMANN		DRAWN BY:
CHECKED BY:		CHECKED BY:

BUTLER MANUFACTURING COMPANY
GENERAL OFFICES-KANSAS CITY, MISSOURI

PRODUCT OF THE PRONTO ORDER ENGINEERING SYSTEM

BUILDER:	PROJECT:	BUILDING ORDER DESCRIPTION:	DRAWING TITLE:	MW	AG FILE NO:
STEELCRAFT CONSTRUCTION WOODINVILLE, WA.	SONOBUOY STORAGE FAC POULSBO, WA.	37X102X16 LRF 25# Roof SL + 3#CLL 80 MPH EXP C UBC 94 SEISMIC ZONE 3	CROSS SECTION ERECTION DRAWING	GROUP: V	DATE: 12/10/97
				DRAWING NUMBER: D97-030629-02B	REV. 01

BIC

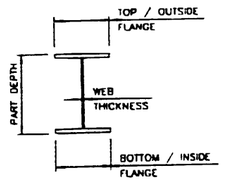

FRAME DESIGN INFORMATION

PART	DESCRIPTION
ROOF BEAM V72195 227-0	TOP FLANGE = 6" X .250"
	BOTTOM FLANGE = 6" X .250"
	WEB THICKNESS = .160"
	PART DEPTH = VARIES 17 9/32" TO 16"
EXTERIOR COLUMN V72190 170-7	TOP FLANGE = 5" X .188"
	BOTTOM FLANGE = 5" X .250"
	WEB THICKNESS = .120"
	PART DEPTH = VARIES 8" TO 20"
EW CORNER POST V72200 171-5	TOP FLANGE = 5" X .188"
	BOTTOM FLANGE = 5" X .188"
	WEB THICKNESS = .120"
	PART DEPTH = 11 7/8"
EW ROOF BEAM V72205 164-0	TOP FLANGE = 5" X .188"
	BOTTOM FLANGE = 5" X .188"
	WEB THICKNESS = .120"
	PART DEPTH = 11 7/8"
EW ROOF BEAM V72210 124-2	TOP FLANGE = 5" X .188"
	BOTTOM FLANGE = 5" X .188"
	WEB THICKNESS = .120"
	PART DEPTH = VARIES 12" TO 22 3/16" TO 11"
EW INTERM POST V72215 195-5	TOP FLANGE = 5" X .188"
	BOTTOM FLANGE = 5" X .188"
	WEB THICKNESS = .120"
	PART DEPTH = 7 7/8"
EW CORNER POST V72220 171-5	TOP FLANGE = 5" X .188"
	BOTTOM FLANGE = 5" X .188"
	WEB THICKNESS = .120"
	PART DEPTH = 11 7/8"
EW ROOF BEAM V72225 227-0	TOP FLANGE = 5" X .188"
	BOTTOM FLANGE = 5" X .188"
	WEB THICKNESS = .120"
	PART DEPTH = 11 7/8"
EW INTERM POST V72230 203-1	TOP FLANGE = 5" X .250"
	BOTTOM FLANGE = 5" X .250"
	WEB THICKNESS = .120"
	PART DEPTH = 8"
EW ROOF BEAM V72235 227-0	TOP FLANGE = 5" X .188"
	BOTTOM FLANGE = 5" X .188"
	WEB THICKNESS = .120"
	PART DEPTH = 11 7/8"
GABLE BEAM V72226 117-6	TOP FLANGE = 6" x .313"
	BOTTOM FLANGE = 6" x .313"
	WEB THICKNESS = .120"
	PART DEPTH = 12"
GABLE BEAM V72227 070-0	TOP FLANGE = 6" x .313"
	BOTTOM FLANGE = 6" x .313"
	WEB THICKNESS = .120"
	PART DEPTH = 12"

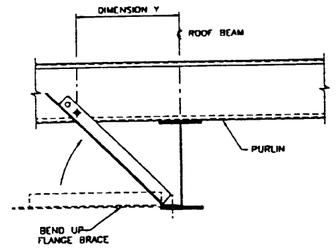

USE (2) 1/2" x 1 1/4" HEX. BOLT (095085) AND 1/2" HEX. NUT (095032)

DETAIL C001 — SINGLE FLANGE BRACE CONNECTION USE FIRST HOLE AT PURLIN CONNECTION

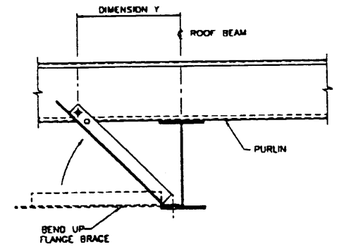

USE (2) 1/2" x 1 1/4" HEX. BOLT (095085) AND 1/2" HEX. NUT (095032)

DETAIL C002 — SINGLE FLANGE BRACE CONNECTION USE SECOND HOLE AT PURLIN CONNECTION

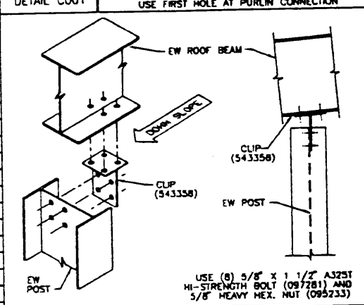

USE (8) 5/8" X 1 1/2" A325T HI-STRENGTH BOLT (097281) AND 5/8" HEAVY HEX. NUT (095233)

DETAIL E137 — ENDWALL POST TOP CONNECTION LOW SLOPE RANGE - LIGHT LOAD

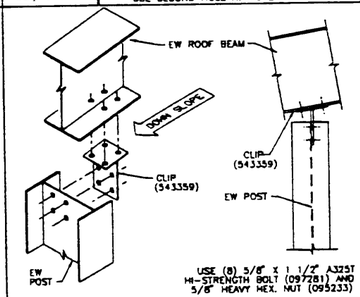

USE (8) 5/8" X 1 1/2" A325T HI-STRENGTH BOLT (097281) AND 5/8" HEAVY HEX. NUT (095233)

DETAIL E140 — ENDWALL POST TOP CONNECTION HIGH SLOPE RANGE - LIGHT LOAD

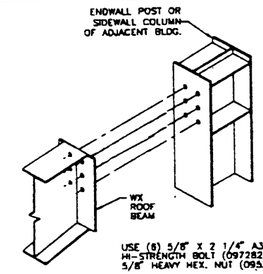

USE (8) 5/8" X 2 1/4" A325T HI-STRENGTH BOLT (097282) AND 5/8" HEAVY HEX. NUT (095233)

DETAIL CZ25 — GABLE BEAM TO ENDWALL COLUMN

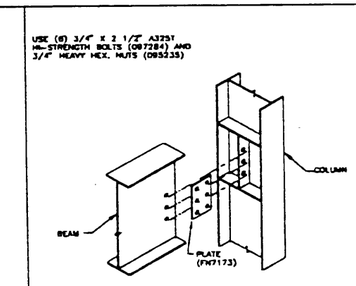

DETAIL MB09 — GABLE BEAM TO ENDWALL POST CONNECTION

Y:\9\030629C

04-17-1998 15:32:29

SCRNAME: C-Man

REVISION NO. 1		REVISION NO. 2
DATE: 04-17-98	DETAILING REVISION NO. 1	DATE:
DRAWN BY: CRISMANAN		DRAWN BY:
CHECKED BY:		CHECKED BY:

BUTLER MANUFACTURING COMPANY
GENERAL OFFICES-KANSAS CITY, MISSOURI

PRODUCT OF THE PRONTO ORDER ENGINEERING SYSTEM

BUILDER:	PROJECT:	BUILDING ORDER DESCRIPTION:	DRAWING TITLE:
STEELCRAFT CONSTRUCTION WOODINVILLE, WA.	SONOBUOY STORAGE FAC POULSBO, WA.	37X102X16 LRF 25# Roof SL + 3#CLL 80 MPH EXP C UBC 94 SEISMIC ZONE 3	CROSS SECTION ERECTION DRAWING DETAIL SHEET

MLH CB B/K

AG FILE NO:

GROUP: V

DATE: 12/10/97

DRAWING NUMBER: D97-030629-02C

REV. 01

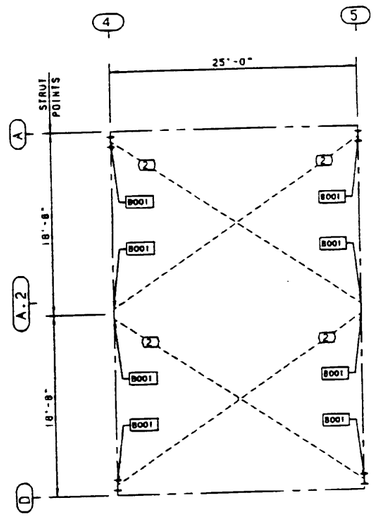

UNIT 1 ROOF BRACING

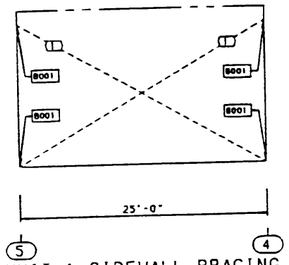

UNIT 1 SIDEWALL BRACING AT GRID A

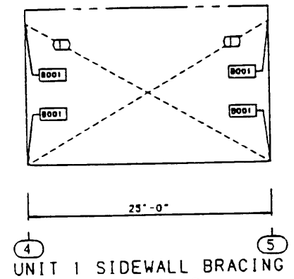

UNIT 1 SIDEWALL BRACING AT GRID D

BRACE ROD SCHEDULE				
⬭	PART NUMBER	DESCRIPTION	THREAD	TURNBUCKLE
1	544047 -352	1/2 " BRACE ROD	RH-RH	NONE
2	544047 -372	1/2 " BRACE ROD	RH-RH	NONE

△1

REVISION NO. 1	REVISION NO. 2
DATE: 04-27-98 DRAWN BY: CBR CHECKED BY:	ROD SIZE CHANGE FROM 7/16" TO 1/2" DATE: DRAWN BY: CHECKED BY:

BUTLER MANUFACTURING COMPANY
GENERAL OFFICES-KANSAS CITY, MISSOURI

PRODUCT OF THE PRONTO ORDER ENGINEERING SYSTEM

BUILDER:	PROJECT:	BUILDING ORDER DESCRIPTION:	DRAWING TITLE:	MLH CB BK	AG FILE NO:
STEELCRAFT CONSTRUCTION WOODINVILLE, WA.	SONOBUOY STORAGE FAC POULSBO, WA.	37X102X16 LRF 25# Roof SL + 3#CLL 80 MPH EXP C UBC 94 SEISMIC ZONE 3	WIND BRACING DRAWING	GROUP: Y	DATE: 04/27/98
				DRAWING NUMBER: D97-030629-03	REV. 01

ROD DIA.	NUT	WASHERS		
		A	B	C
7/16"	095083	095133	095165	020821
1/2"	095032	095133	095165	020821
5/8"	095231	095298	095185	020821
3/4"	095235	095264	095948	020822
7/8"	095237	095264	095948	020822

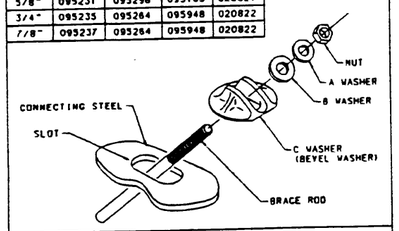

DETAIL B001 | TYPICAL BEVEL WASHER CONNECTION

BK

REVISION NO. 1	REVISION NO. 2		BUILDER:	PROJECT:	BUILDING ORDER DESCRIPTION:	DRAWING TITLE:	MLH	AG FILE NO:
DATE:	DATE:	BUTLER MANUFACTURING COMPANY GENERAL OFFICES-KANSAS CITY, MISSOURI	STEELCRAFT CONSTRUCTION WOODINVILLE, WA.	SONOBUOY STORAGE FAC POULSBO, WA.	37X102X16 LRF 25# Roof SL + 3#CLL 80 MPH EXP C UBC 94 SEISMIC ZONE 3	WIND BRACING DETAIL SHEET	GROUP: Y	DATE: 04/27/98
DRAWN BY:	DRAWN BY:	PRODUCT OF THE PRONTO ORDER ENGINEERING SYSTEM					DRAWING NUMBER: D97-030629-03A	REV. 00
CHECKED BY:	CHECKED BY:							

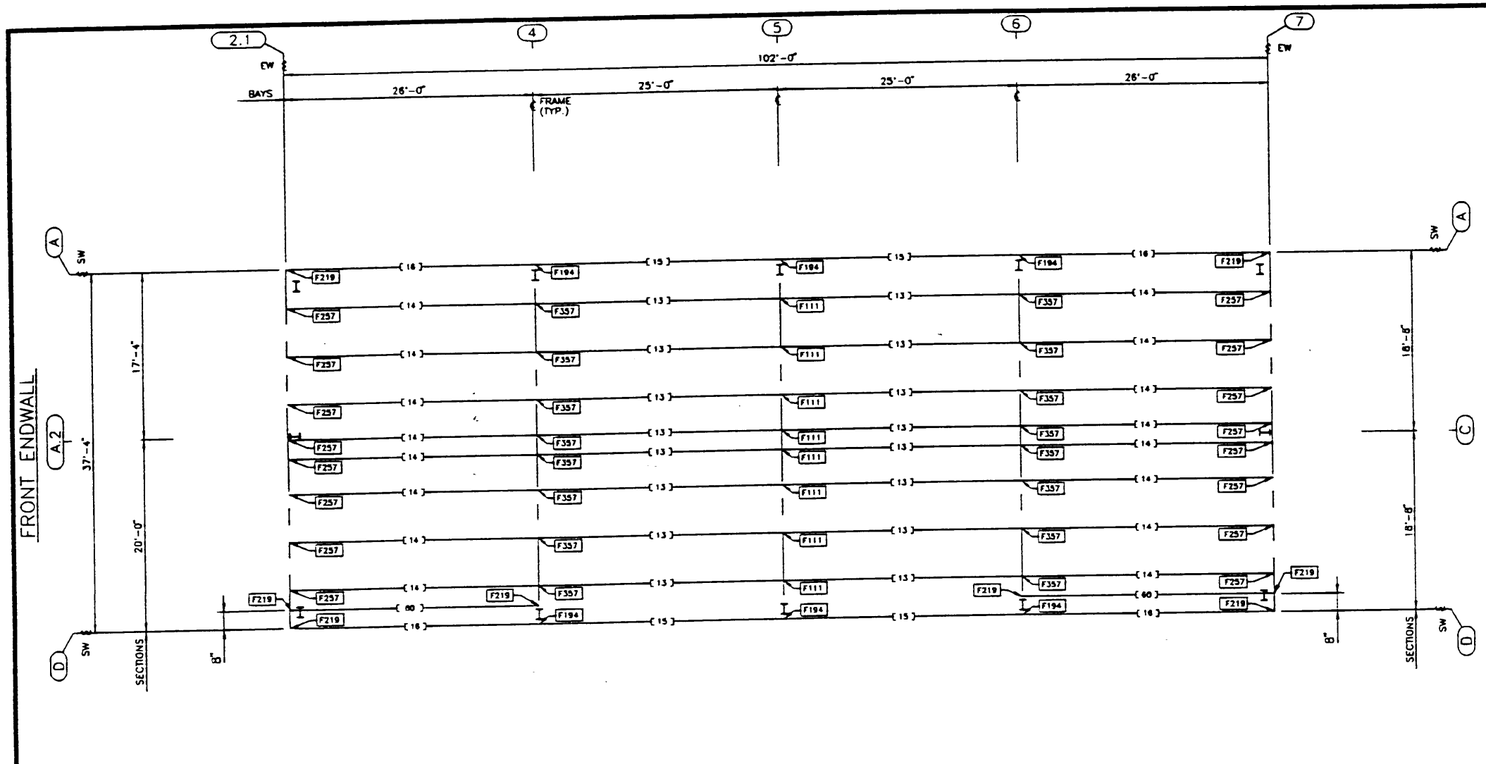

UNIT 1 ROOF SECONDARY STRUCTURAL FRAMING PLAN

PART SCHEDULE				
[ ]	PART NAME	PART NUMBER	PART LENGTH	FIELD WORK ▲
13	PURLIN	530642 335-4	27'-11 1/2"	
14	PURLIN	530643 347-4	28'-11 1/2"	
15	EAVE STRUT	540325 299-4	24'-11 1/2"	
16	EAVE STRUT	540329 311-4	25'-11 1/2"	
* 60	EAVE STRUT	540329 317-4	26'-5 1/2"	

PURLIN BRACE LOCATION SCHEDULE					
BETWEEN GRIDS	LOCATION DETAIL	BRACE SECTION TOP	BRACE SECTION BOTTOM	DIM. "B"	RIDGE BRACE
2.1 AND 4	F307	(3) A	-0-	7'-10 1/2"	(3)0544195
4 AND 5	F307	(3) A	-0-	7'-4 1/2"	(3)0544195
5 AND 6	F307	(3) A	-0-	7'-4 1/2"	(3)0544195
6 AND 7	F307	(3) A	-0-	7'-10 1/2"	(3)0544195

STANDARD NOTES:

RS0006 REFER TO DRAWING B-1080946 FOR PURLIN BRACE PART NUMBERS AND TYPICAL INSTALLATION FOR SLOPE GREATER THAN 0.75:12.

RS0008 REFER TO DETAIL F262 FOR RIDGE PURLIN BRACE CONNECTION.

* BUILDER TO FIELD SLOT EAVE STRUT FOR BRACING.

BK

REVISION NO. 1	REVISION NO. 2		BUILDER:	PROJECT:	BUILDING ORDER DESCRIPTION:	DRAWING TITLE:		AG FILE NO:
DATE 04-17-98 DRAWN BY CBRADAM CHECKED BY	DETAILING REVISION NO. 1	DATE: DRAWN BY CHECKED BY	STEELCRAFT CONSTRUCTION WOODINVILLE, WA.	SONOBUOY STORAGE FAC POULSBO, WA.	37X102X16 LRF 25# Roof SL + 3#CLL 80 MPH EXP C UBC 94 SEISMIC ZONE 3	ROOF SECONDARY STRUCTURAL FRAMING PLAN	GROUP: V	DATE: 12/10/97
							DRAWING NUMBER: D97-030629-04	REV. 01

BUTLER MANUFACTURING COMPANY
GENERAL OFFICES-KANSAS CITY, MISSOURI

PRODUCT OF THE PRONTO ORDER ENGINEERING SYSTEM

USERNAME: Mike Hylond 03-11-1998 16:20:30 Y:\9\0306294\

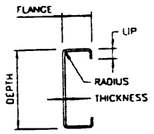

C - SECTION DESIGN INFORMATION					
PART	DEPTH	FLANGE	LIP	THICKNESS	RADIUS
EAVE STRUT 540325	9 1/2"	3 1/2"	1 1/8"	.089"	5/16"
EAVE STRUT 540329	9 1/2"	3 1/2"	1 1/8"	.089"	5/16"

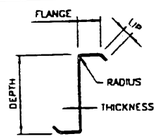

Z - SECTION DESIGN INFORMATION					
PART	DEPTH	FLANGE	LIP	THICKNESS	RADIUS
PURLIN 530642	9 1/2"	2 3/4"	1 1/16"	.067"	1/4"
PURLIN 530643	9 1/2"	2 3/4"	1 1/16"	.073"	1/4"

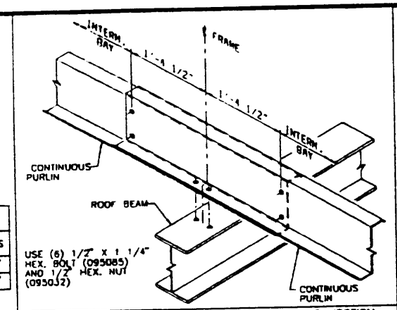

DETAIL F111 — CONTINUOUS SPAN PURLIN CONNECTION
INTERM. LOCATION - 9 1/2" PURLIN

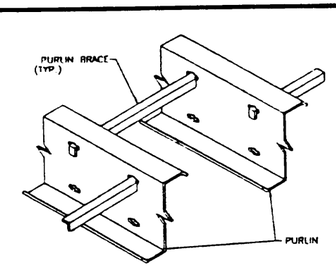

DETAIL F152 — PURLIN BRACE
TOP ROW

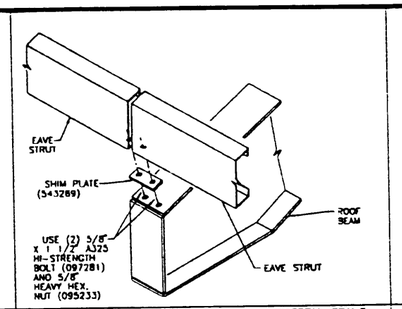

DETAIL F194 — EAVE STRUT CONN. TO INTERM. FRAME
2:12 ROOF SLOPE

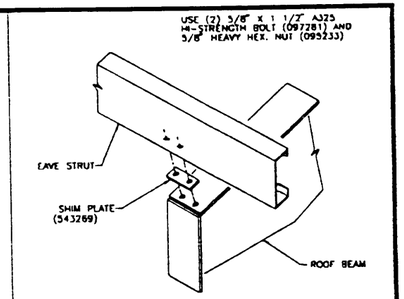

DETAIL F219 — EAVE STRUT CONN. TO ENDWALL FRAME EW
2:12 ROOF SLOPE

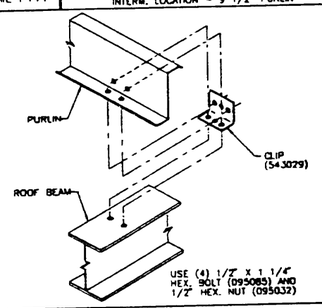

DETAIL F257 — PURLIN CONNECTION TO EW ROOF BEAM

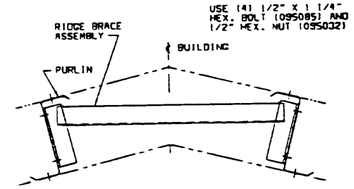

DETAIL F262 — RIDGE CHANNEL CONNECTION

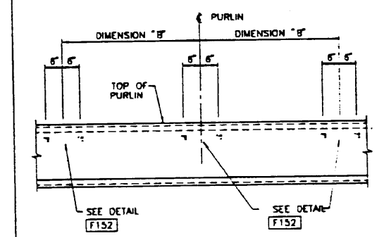

DETAIL F307 — PURLIN BRACE LAYOUT
(3) ROWS TOP - (0) ROWS BOTTOM

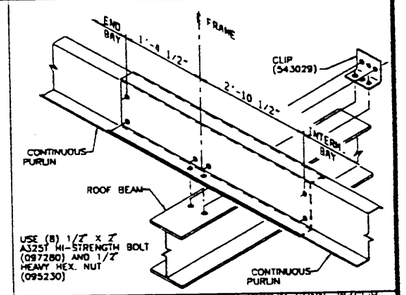

DETAIL F357 — CONTINUOUS SPAN PURLIN CONN. W/CLIP
END BAY STRUT LOCATION - 9 1/2" PURLIN

CB
BK

REVISION NO. 1		REVISION NO. 2	
DATE:		DATE:	
DRAWN BY:		DRAWN BY:	
CHECKED BY:		CHECKED BY:	

BUTLER MANUFACTURING COMPANY
GENERAL OFFICES-KANSAS CITY, MISSOURI

PRODUCT OF THE PROVIO ORDER ENGINEERING SYSTEM

BUILDER:	PROJECT:	BUILDING ORDER DESCRIPTION:	DRAWING TITLE:	MI#	AG FILE NO:
STEELCRAFT CONSTRUCTION WOODINVILLE, WA.	SONOBUOY STORAGE FAC POULSBO, WA.	37X102X16 LRF 25# Roof SL + 3#CLL 80 MPH EXP C UBC 94 SEISMIC ZONE 3	ROOF SECONDARY STRUCTURAL DETAIL SHEET	GROUP: V	DATE: 04/27/98
				DRAWING NUMBER: 97-030629-04A	REV. 00

USERNAME: Mike Hyland 03-11-1998 16:17:49 Y:\9\030629A

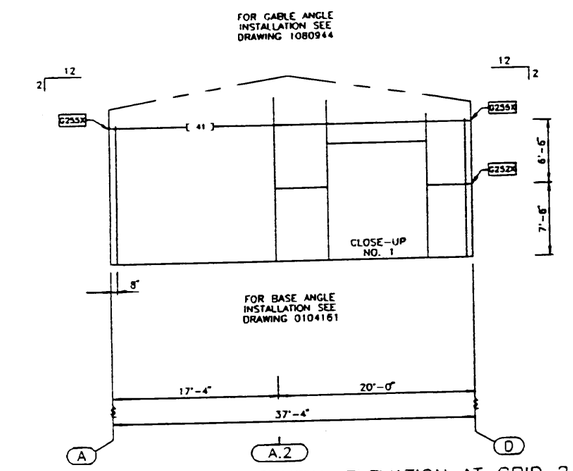

UNIT 1 FRONT EW STRUCTURAL ELEVATION AT GRID 2.1

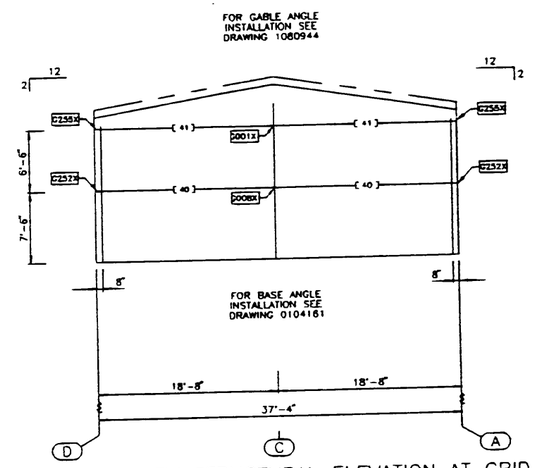

UNIT 1 REAR EW STRUCTURAL ELEVATION AT GRID 7

PART SCHEDULE				
[ ]	PART NAME	PART NUMBER	PART LENGTH	FIELD WORK ▲
41	C' GIRT	702143 223-4	16'-7 1/2"	
40	GIRT	550296 199-2	16'-7 1/4"	1

FIELD WORK SCHEDULE				
▲	DETAIL	FIELD WORK DIMENSIONS		
1	X042	A = 16'-2 1/4"	B = 0-5"	C = 7/8"
		D = 3"		

STANDARD NOTES:

WS0006 FILL ALL OPEN HOLES IN DOOR POST WEBS WITH PLASTIC SNAP-IN PLUGS (097229).

WS0014 UNPUNCHED GIRTS ARE SUPPLIED AT OVERHEAD OR SLIDE DOORS. PUNCHED WALL SYSTEMS REQUIRE THE FIELD DRILLING OF THE 5/16" PANEL ATTACHMENT HOLES IN THE GIRT FLANGE.

WS0023 I M P O R T A N T
REFER TO PRONTO DETAIL G047 FOR PROPER GIRT ALIGNMENT.

*NOTE: BUILDER TO FIELD LOCATE AND FIELD WORK ALL FRAMED OPENINGS. REFER TO PLANOGRAPH #10801159, #1081161, #1081163, & #1081173 FOR DETAILS.

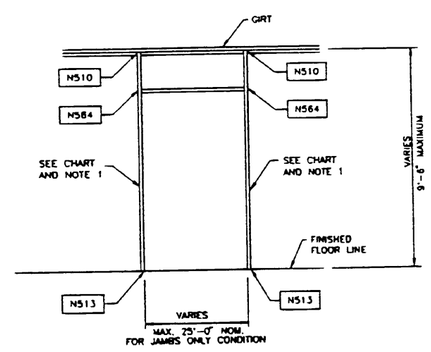

FRAMED OPENING
BETWEEN FLOOR AND 9-1/2" GIRTS
WITH JAMBS ONLY

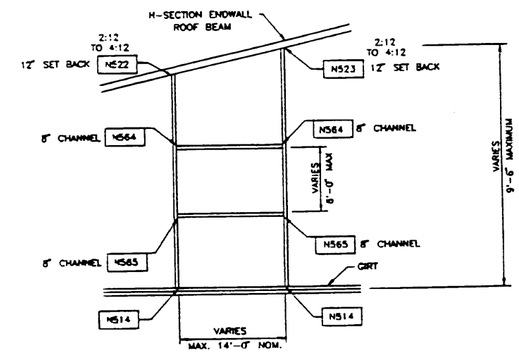

FRAMED OPENING
BETWEEN GIRT AND H-SECTION EW ROOF BEAM
WITH 12" SETBACK, W/HEADER, SILL & JAMBS

REVISION NO. 1	REVISION NO. 2								
DATE 04-17-98	DETAILING REVISION NO. 1	DATE	BUTLER MANUFACTURING COMPANY GENERAL OFFICES-KANSAS CITY, MISSOURI	PRODUCT OF THE PRONTO ORDER ENGINEERING SYSTEM	BUILDER: STEELCRAFT CONSTRUCTION WOODINVILLE, WA.	PROJECT: SONOBUOY STORAGE FAC POULSBO, WA.	BUILDING ORDER DESCRIPTION: 37X102X16 LRF 25# Roof SL + 3#CLL 80 MPH EXP C UBC 94 SEISMIC ZONE 3	DRAWING TITLE: WALL SECONDARY STRUCTURAL ELEVATION	GROUP: V / DRAWING NUMBER: D97-030629-05
DRAWN BY CHARACAN		DRAWN BY							
CHECKED BY		CHECKED BY							

AG FILE NO:
DATE: 12/10/97
REV. 01

Y:\B\03062951 04-17-1998 16:12:42 USERNAME: C-Man

PART SCHEDULE				
[ ]	PART NAME	PART NUMBER	PART LENGTH	FIELD WORK ▲
11	GIRT	550300 289-2	24'-1 1/4"	
44	⊃ GIRT	702143 298-6	24'-10 3/4"	
45	⊃ GIRT	702143 311-1	25'-11 1/8"	

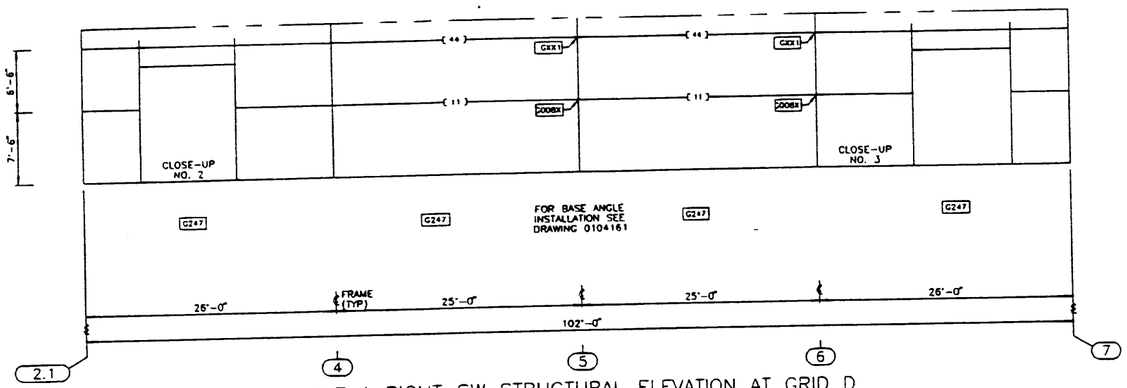

UNIT 1 RIGHT SW STRUCTURAL ELEVATION AT GRID D

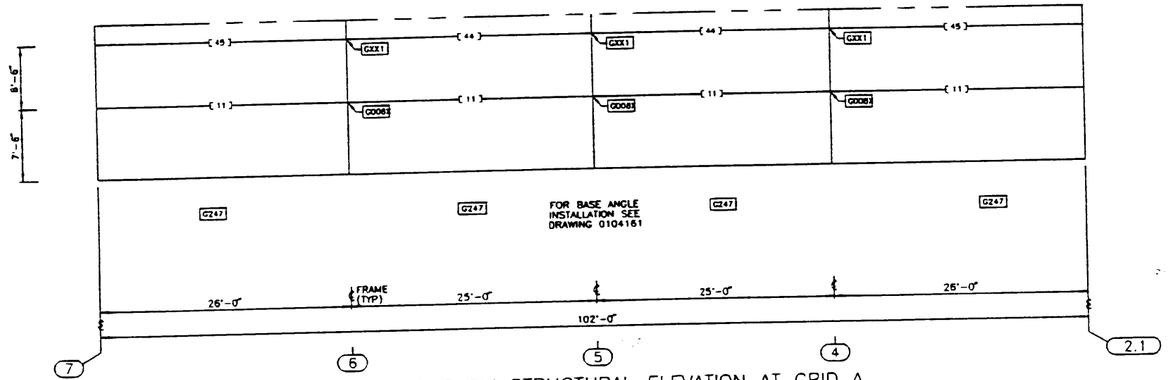

UNIT 1 LEFT SW STRUCTURAL ELEVATION AT GRID A

REVISION NO. 1		REVISION NO. 2	
DATE: 04-17-98	DETAILING REVISION NO. 1	DATE:	
DRAWN BY: CBENFACAN		DRAWN BY:	
CHECKED BY:		CHECKED BY:	

BUTLER MANUFACTURING COMPANY
GENERAL OFFICES-KANSAS CITY, MISSOURI

PRODUCT OF THE PRONTO® ORDER ENGINEERING SYSTEM

BUILDER:	PROJECT:	BUILDING ORDER DESCRIPTION:	DRAWING TITLE:	AG FILE NO:
STEELCRAFT CONSTRUCTION WOODINVILLE, WA.	SONOBUOY STORAGE FAC POULSBO, WA.	37X102X16 LRF 25# Roof SL + 3#CLL 80 MPH EXP C UBC 94 SEISMIC ZONE 3	WALL SECONDARY STRUCTURAL ELEVATION	GROUP: V / DATE: 12/10/97
				DRAWING NUMBER: D97-030629-05A / REV. 01

MLH CB BK

USERNAME: C-Mon 04-17-1998 10:22:24 Y:\9\0306295A

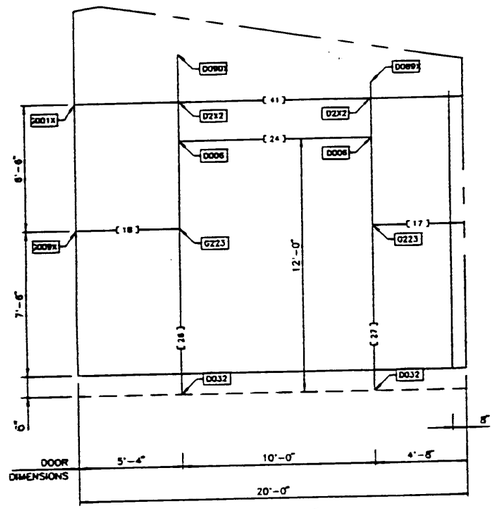

CLOSE-UP #1

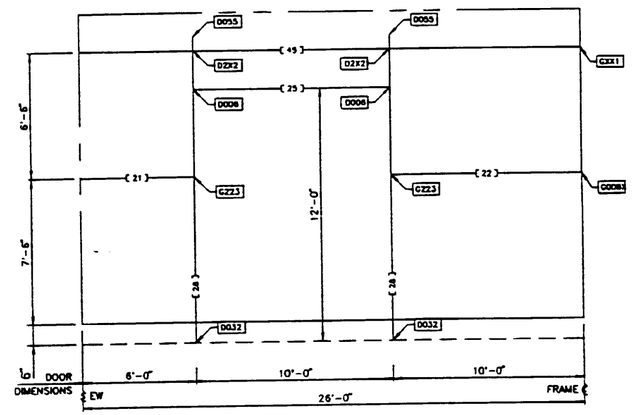

CLOSE-UP #2

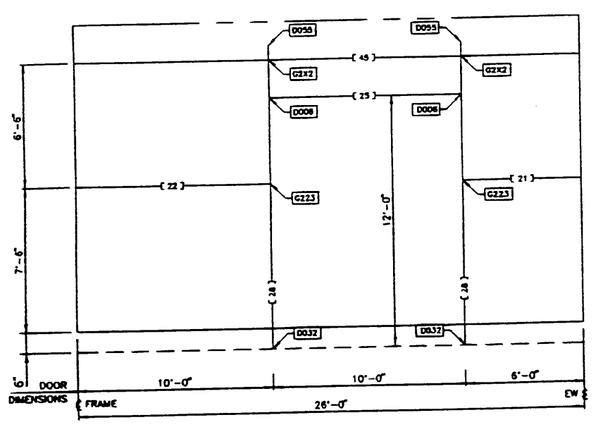

CLOSE-UP #3

PART SCHEDULE				
[ ]	PART NAME	PART NUMBER	PART LENGTH	FIELD WORK ▲
17	GIRT	550314 026-2	2'-2 1/4"	
18	GIRT	550314 053-4	4'-5 1/2"	
41	"C" GIRT	702143 223-4	18'-7 1/2"	
45	"C" GIRT	702143 298-6	24'-10 3/4"	
21	GIRT	550315 049-2	4'-1 1/4"	
22	GIRT	550315 109-2	9'-1 1/4"	
24	DOOR HEADER	580273	9'-11 1/2"	
25	DOOR HEADER	580273	9'-11 1/2"	
26	DOOR POST	580607 204-4	17'-0 7/16"	
27	DOOR POST	580607 184-1	15'-4 3/32"	
28	DOOR POST	580607 183-0	15'-2 15/16"	

BK

REVISION NO. 1		REVISION NO. 2	
DATE: 04-17-98	DETAILING REVISION NO. 1	DATE:	
DRAWN BY: CRISWELCAN		DRAWN BY:	
CHECKED BY:		CHECKED BY:	

BUTLER MANUFACTURING COMPANY
GENERAL OFFICES-KANSAS CITY, MISSOURI

PRODUCT OF THE PRONTO ORDER ENGINEERING SYSTEM

BUILDER:	PROJECT:	BUILDING ORDER DESCRIPTION:	DRAWING TITLE:	MLW	AG FILE NO:
STEELCRAFT CONSTRUCTION WOODINVILLE, WA.	SONOBUOY STORAGE FAC POULSBO, WA.	37X102X16 LRF 25# Roof SL + 3#CLL 80 MPH EXP C UBC 94 SEISMIC ZONE 3	DOOR DETAIL DRAWING	GROUP: V	DATE: 12/10/97
				DRAWING NUMBER: D97-030629-05B	REV. 01

USERNAME: C-Mon 04-17-1998 17:03:10 V:\9\02062958

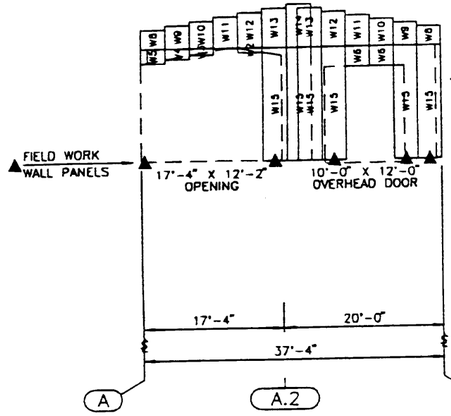

FRONT ENDWALL PANELING ELEVATION
AT GRID 2.1

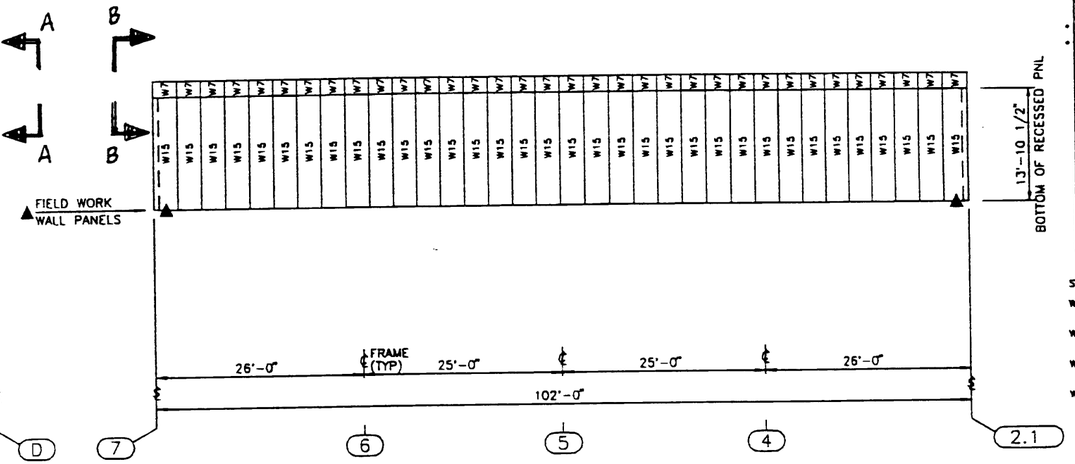

LEFT SIDEWALL PANELING ELEVATION
AT GRID A

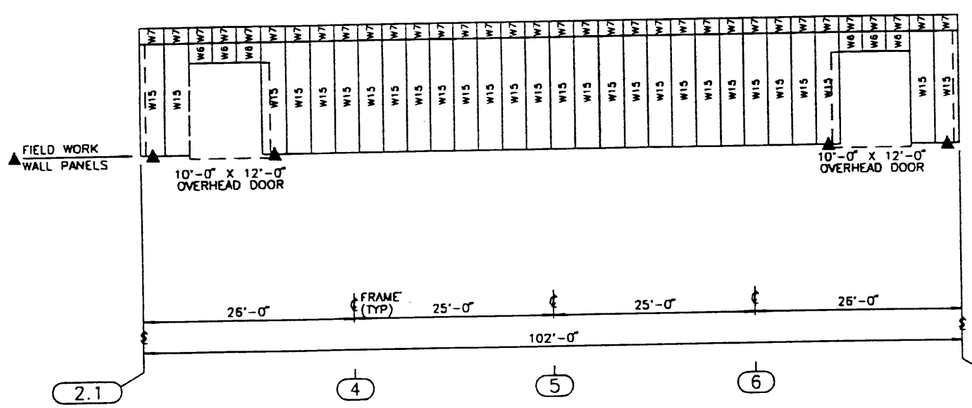

RIGHT SIDEWALL PANELING ELEVATION
AT GRID D

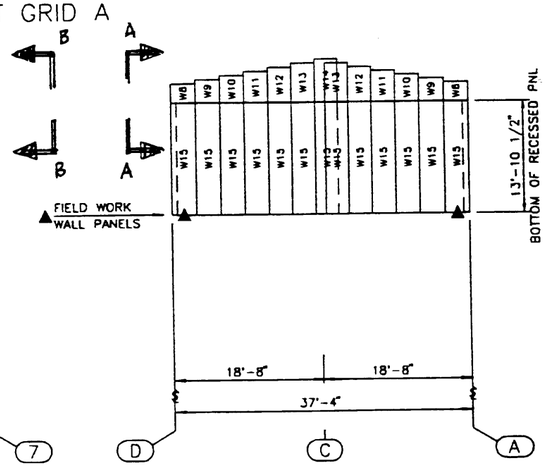

REAR ENDWALL PANELING ELEVATION
AT GRID 7

WALL PANEL SCHEDULE					
ID	PART NUMBER	EXT. SUFF.	INT. SUFF.	LENGTH	DESCRIPTION
* PANELS SHORTER THAN 1'-0" MUST BE FIELD CUT TO LENGTH.					
* W2	027094	864		006-6	BRII HDR UNP STONE WH
* W3	027094	864		010-0	BRII HDR UNP STONE WH
W4	027095	864		016-0	BRII HDR SQ STONE WH
W5	027095	864		022-0	BRII HDR SQ STONE WH
W6	027095	864		029-6	BRII HDR SQ STONE WH
W7	027095	864		025-0	BRII HDR SQ STONE WH
W8	570528	864		029-7	BRII HDR SQ STONE WH
W9	570528	864		035-7	BRII HDR SQ STONE WH
W10	570528	864		041-7	BRII HDR SQ STONE WH
W11	570528	864		047-7	BRII HDR SQ STONE WH
W12	570528	864		053-7	BRII HDR SQ STONE WH
W13	570528	864		059-7	BRII HDR SQ STONE WH
W14	570528	864		065-7	BRII HDR SQ STONE WH
W15	027162	864		188-5	BRII SQ PUN STONE WH

STANDARD NOTES:

WP0010 INSTALL OVERHEAD DOOR TRIM FOR BRII WALL PANELS PER DRAWING 104219

WP0014 BRII WALL PANEL-TO-PANEL FASTENERS ARE 097364 (1/4 X 3/4 T-30 TORX SELF DRILLING SCREW).

WP0019 BRII WALL PANEL-TO-STRUCTURAL TOP/BASE FASTENERS ARE 097361 (11/32 X 7/8 T-45 TORX SCRUBOLT).

WP0028 FOR GENERAL BRII WALL PNL INFO. REFER TO THE FOLLOWING DWGS :

- 104217 - GENERAL PANELING INFORMATION
- 105017 - INSULATION AT TOP OF WALL-SIDEWALL
- 105018 - INSULATION AT TOP OF WALL-ENDWALL
- 1080854 - WALL PANEL LENGTH CALCULATIONS
- 1080873 - GENERAL INSTALLATION TORX FASTENERS

WP0030 THE DIRECTION OF ERECTION FOR BUTLERIB II WALL PANEL IS LEFT-TO-RIGHT.

IMPORTANT APPEARANCE ITEM
****
FIELD TRIM INSULATION SO THAT THERE IS MAXIMUM OF 3" THICKNESS BETWEEN STRUCTURALS AND FLAT SURFACE OF WALL PANEL. WHEN TRIMMING INSULATION, BE CAREFUL NOT TO CUT VAPOR RETARDER.

WP0075 BRII WALL PANEL-TO-GIRT FASTENERS ARE 097361 (11/32 X 7/8 T-45 TORX SCRUBOLT).

UNPUNCHED DOOR SIDE GIRTS REQUIRE FIELD DRILLED 5/16" HOLES.

BIC

REVISION NO. 1	REVISION NO. 2							
DATE: 04-20-98	DETAILING REVISION NO. 1	DATE:		BUTLER MANUFACTURING COMPANY GENERAL OFFICES-KANSAS CITY, MISSOURI	PRODUCT OF THE PRONTO ORDER ENGINEERING SYSTEM	BUILDER: STEELCRAFT CONSTRUCTION WOODINVILLE, WA.	PROJECT: SONOBUOY STORAGE FAC POULSBO, WA.	BUILDING ORDER DESCRIPTION: 37X102X16 LRF 25# Roof SL + 3#CLL 80 MPH EXP C UBC 94 SEISMIC ZONE 3
DRAWN BY		DRAWN BY						
CHECKED BY		CHECKED BY						

DRAWING TITLE: WALL PANEL DRAWING

MLH

AG FILE NO:

GROUP: V

DATE: 04/18/98

DRAWING NUMBER: D97-030629-06

REV. 01

USERNAME: C-Mon 04-20-1998 16:34:50 Y:\B\D3062981

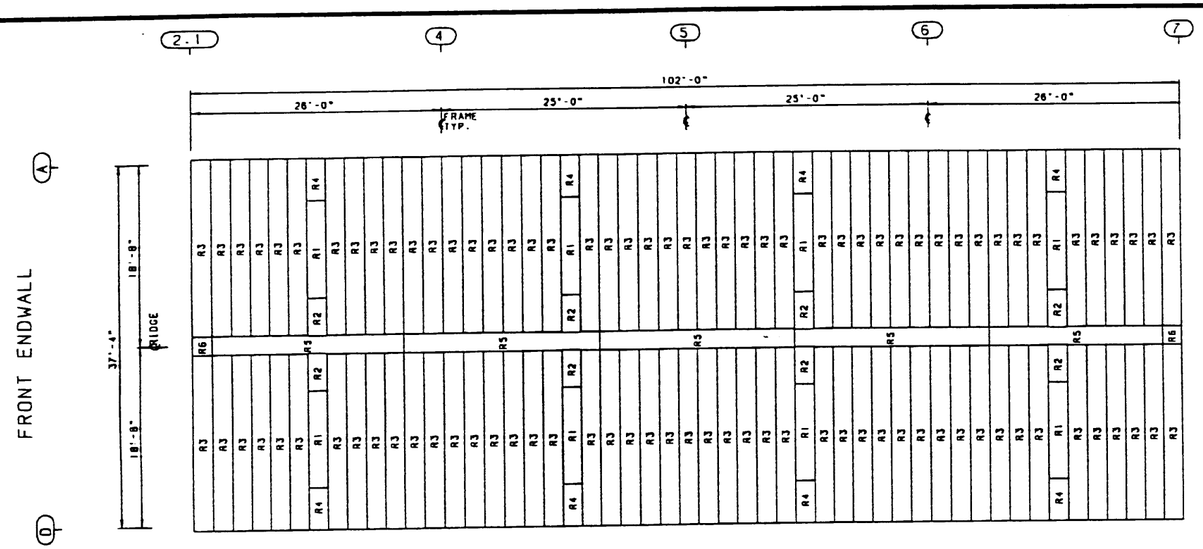

ROOF PANEL SCHEDULE					
ID	PART NUMBER	SUFF.	LENGTH	DESCRIPTION	HOLE TO HOLE
R1	580048	390		MR24 LITE-PANL WHITE	10'-1 21/32"
R2	580105	865	055-5	MR24 SPLICE PANEL STONE WH	3'-8 19/32"
R3	580117	865	229-3	MR24 EAVE PANEL STONE WH	17'-9 5/32"
R4	580118	865	059-8	MR24 EAVE PANEL STONE WH	3'-10 29/32"
R5	580157	058		MR24 RIDGE COVER	
R6	580173			MR24 RIDGE END COVER	

STANDARD NOTES:

RP0031 REFER TO GENERAL ROOF INDEX DRAWING 1081111 FOR ADDITIONAL ERECTION DRAWING REQUIREMENTS.

REFER TO DRAWING 1080876 AND/OR 1080877 WHEN FIELD WORK IS REQUIRED FOR VARIABLE-WIDTH ROOF PANELS.

RP0038 W A R N I N G
****
PANELS WITH PROTECTIVE OIL COATING ARE SLIPPERY. PROCEED WITH CAUTION. WIPE CLEAN IF NECESSARY.

RP0039 W A R N I N G
****
DO NOT STAND ON ROOF PANELS THAT SPAN ONLY ONE PURLIN SPACE. THESE PANELS ARE EASILY DAMAGED AND CAN BE DANGEROUS.

RP0046 PANEL CLIP FASTENERS
****
USE SCRUBOLT 097196 (GREEN 3/8 X 1) FOR PANEL CLIP-TO-PURLIN CONNECTIONS.

RP0054 DIRECTION OF ERECTION FOR MR-24 PANELS ON LEFT SLOPE IS FRONT TO REAR OF ROOF SURFACE.

RP0055 DIRECTION OF ERECTION FOR MR-24 PANELS ON RIGHT SLOPE IS REAR TO FRONT OF ROOF SURFACE.

RP0059 MR24 RIDGE COVER IS FURNISHED IN 20' LENGTHS. FIELD CUT THE RIDGE COVER TO LENGTH AS REQUIRED.

RP0062 ROOF PANELS MUST BE ATTACHED TO ALL ROOF STRUCTURALS TO INSURE THE STRUCTURAL INTEGRITY OF THE ROOF. THIS INCLUDES ALL PURLINS ADDED FOR SPECIFIC LOADING CONDITIONS, ETC.

ENOUGH PANEL-TO-STRUCTURAL FASTENERS, CLIPS (IF MR-24/CMR-24) HAVE BEEN FURNISHED FOR ALL ROOF STRUCTURALS.

RP0073 HOLE TO HOLE DIMENSION IN THE ROOF PANEL SCHEDULE IS NORMALLY THE DISTANCE BETWEEN THE STRUCTUAL ATTACHMENTS AT EACH END OF ROOF PANEL (SEE DWG 000001). THIS MAY NOT BE TRUE FOR CUSTOM PANEL CONDITIONS.

BCL

REVISION NO. 1	REVISION NO. 2							
DATE:	DATE:	BUTLER MANUFACTURING COMPANY GENERAL OFFICES-KANSAS CITY, MISSOURI	PRODUCT OF THE TRONO ORDER ENGINEERING SYSTEM	BUILDER: STEELCRAFT CONSTRUCTION WOODINVILLE, WA.	PROJECT: SONOBUOY STORAGE FAC POULSBO, WA.	BUILDING ORDER DESCRIPTION: 37X102X16 LRF 25# Roof SL + 3#CLL 80 MPH EXP C UBC 94 SEISMIC ZONE 3	DRAWING TITLE: ROOF PANEL DRAWING	MCH / AC FILE NO:
DRAWN BY:	DRAWN BY:							GROUP: Y / DATE: 04/15/98
CHECKED BY:	CHECKED BY:							DRAWING NUMBER: D97-030629-07 / REV. 00

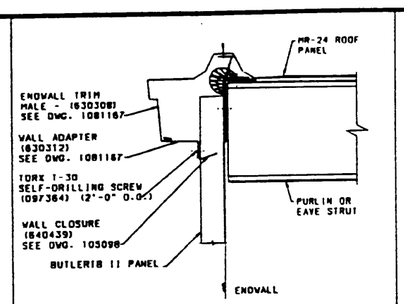

DETAIL K397 — GABLE TRIM LEFT WITH MR-24 ROOF
BUTLERIB II WALL PANEL W/CLOSURE (+1+12++3+12)

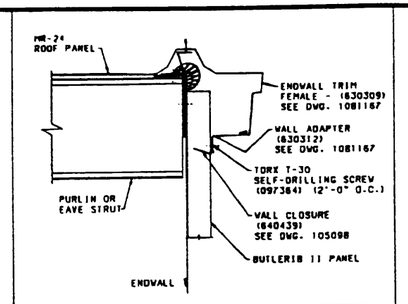

DETAIL K398 — GABLE TRIM RIGHT WITH MR-24 ROOF
BUTLERIB II WALL PANEL W/CLOSURE (+1+12++3+12)

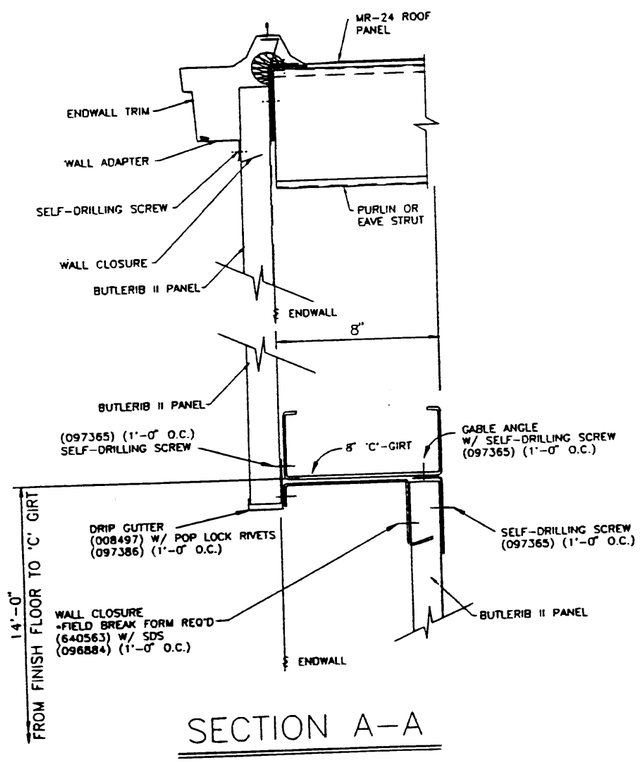

SECTION A-A

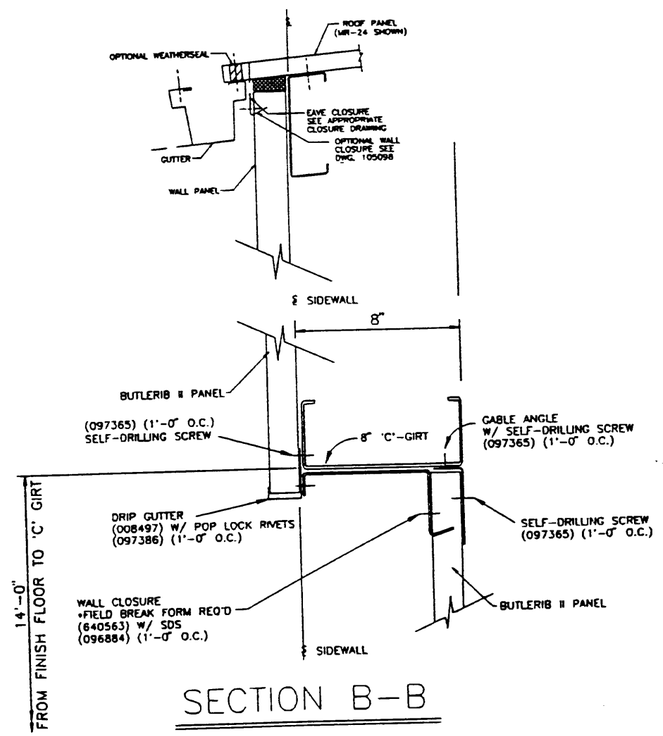

SECTION B-B

REVISION NO. 1	REVISION NO. 2							
DATE:	DATE:	BUTLER MANUFACTURING COMPANY GENERAL OFFICES-KANSAS CITY, MISSOURI	PRODUCT OF THE PRONTO ORDER ENGINEERING SYSTEM	BUILDER: STEELCRAFT CONSTRUCTION WOODINVILLE, WA.	PROJECT: SONOBUOY STORAGE FAC POULSBO, WA.	BUILDING ORDER DESCRIPTION: 37X102X16 LRF 25# Roof SL + 3#CLL 80 MPH EXP C UBC 94 SEISMIC ZONE 3	DRAWING TITLE: EDGE OF ROOF DETAIL SHEET	MH / CB — AG FILE NO:
DRAWN BY:	DRAWN BY:							GROUP: V — DATE: 04/13/98
CHECKED BY:	CHECKED BY:							DRAWING NUMBER: D97-030629-07A — REV. 00

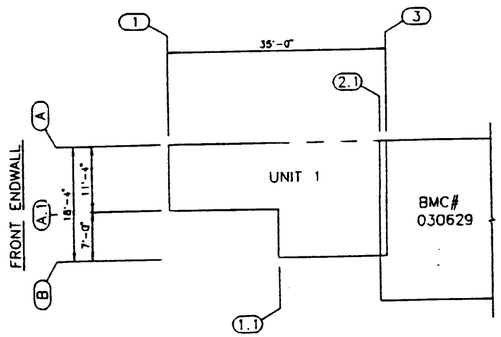

KEY PLAN

SPECIFIC ERECTION DRAWING LIST

THE DRAWINGS LISTED BELOW HAVE BEEN CREATED BY COMPUTER SPECIFICALLY FOR YOUR ORDER TO ASSIST YOU IN PUTTING UP YOUR BUILDING. THESE SPECIFIC ERECTION DRAWINGS ARE THE SAME SIZE AS THIS SHEET AND CAN BE IDENTIFIED INDIVIDUALLY FROM THE TITLES AND DRAWING SEQUENCE NUMBERS THAT APPEAR IN THE LOWER RIGHT HAND CORNER OF EACH DRAWING.

DRAWING TITLE:		AG FILE NO.:
ROOF SECONDARY STRUCTURAL FRAMING PLAN		DATE: 02/16/83
	DRAWING NUMBER: D 83-123456-05L	REVISION 02

TITLE

THE YEAR DURING WHICH YOUR ORDER WAS ENTERED

THE BUTLER ORDER NUMBER OF YOUR ORDER

DRAWING SEQUENCE NUMBER

REVISION LEVEL OF THE DRAWING. IF THE DRAWING HAS NEVER BEEN REVISED, 00 APPEARS HERE.

D97-030630-00 COVER DRAWING - SHEET 1
D97-030630-01 SPECIFIC ANCHOR BOLT DRAWING - SHEET 1
D97-030630-01A SPECIFIC REACTION DRAWING - SHEET 2
~~D97-030630-01B ANCHOR BOLT DETAIL SHEET - SHEET 3~~
D97-030630-02 CROSS SECTION ERECTION DRAWING - SHEET 1
~~D97-030630-02A CROSS SECTION ERECTION DRAWING - SHEET 2~~
~~D97-030630-02B CROSS SECTION ERECTION DRAWING DETAIL SHEET - SHEET 3~~
D97-030630-03 WIND BRACING DRAWING - SHEET 1
~~D97-030630-03A WIND BRACING DETAIL SHEET - SHEET 2~~
D97-030630-04 ROOF SECONDARY STRUCTURAL FRAMING PLAN - SHEET 1
~~D97-030630-04A ROOF SECONDARY STRUCTURAL DETAIL SHEET - SHEET 2~~
D97-030630-05 WALL SECONDARY STRUCTURAL ELEVATION - SHEET 1
~~D97-030630-05A WALL SECONDARY STRUCTURAL ELEVATION - SHEET 2~~
D97-030630-05B WALL SECONDARY STRUCTURAL ELEVATION DETAIL SHEET - SHEET 3
D97-030630-06 WALL PANEL DRAWING - SHEET 1
~~D97-030630-06A WALL PANEL DRAWING - SHEET 2~~
D97-030630-07 ROOF PANEL DRAWING - SHEET 1

SUPPLEMENTING THE SPECIFIC ERECTION DRAWINGS LISTED ARE SEVERAL GENERAL ERECTION DRAWINGS CALLED "PLANOGRAPHS". SEE THE DRAWING MANIFEST FOR A COMPLETE LIST OF THESE DRAWINGS.

FIELD WORK SUMMARY

WIND BRACING
FW0001 FIELD WORK MAY BE REQUIRED AT LOWER ROOF BEAM KNEE AREA FOR BRACING CUP CONNECTION.

ROOF SECONDARY
FW0019 FIELD LOCATE HOLES IN PURLINS/GIRTS FOR CONTINUOUS PURLIN/GIRT (2) TWO BAY BUILDING STRUT CONNECTION.

OFFICE

COVER DRAWING NOTES

STANDARD NOTES:

CD0001 ATTACH PATENT PLATE 007849 TO THE WEB OF AN INTERMEDIATE FRAME COLUMN AT EYE LEVEL.

CD0002 PARTS SHOWN MAY BE UPGRADED DUE TO STANDARDIZED FABRICATION. REFER TO THE SHIPPING MANIFEST FOR POSSIBLE SUBSTITUTIONS.

CD0010

MATERIALS	ASTM DESIGNATION	
STRUCTURAL STEEL PLATE	A-529	FY= 50KSI (GRADE 50)
LIGHT GAGE/COLD FORMED	A-570	FY= 55KSI (GRADE 55)
BRACE RODS 1/4" & LESS	A-108	GRADE 1018
BRACE RODS OVER 3/4"	A-572	GRADE 50 OR GREATER
HOT ROLLED MILL SHAPES	A-36; A-572	FY= 36KSI; FY=50KSI
ROOF AND WALL PANELS	A-446	GRADE 45 OR GREATER
BOLTS	A-307 AND A-325	

CD0011 HIGH STRENGTH BOLTING:

ALL HIGH STRENGTH BOLTS ARE A-325-T WITH HEAVY HEX NUTS AND ARE TO BE INSTALLED USING THE "TURN-OF-THE-NUT" METHOD SPECIFIED IN THE NINTH EDITION OF THE AISC "SPECIFICATION FOR STRUCTURAL JOINTS USING ASTM A325 OR A490 BOLTS" PER SECTION 8 D (1). A-325 BOLTS MAY BE INSTALLED WITHOUT WASHERS WHEN TIGHTENED BY THE "TURN-OF-THE-NUT" METHOD. IT IS THE RESPONSIBILITY OF THE ERECTOR TO ASSURE PROPER TIGHTNESS. SEE INSTALLATION OF A-325T BOLT DRAWING 8-1080268 (GROUP 78-052-01).

CD0013 IF THESE DRAWINGS ARE SEALED, THE SEAL APPLIES ONLY TO THE MATERIALS SUPPLIED BY BUTLER MFG. CO. AND IS NOT INTENDED AS THE SEAL OF THE ENGINEER OF RECORD FOR THE ENTIRE PROJECT.

SPECIAL NOTES:

CD00100 ALL BOLTED CONNECTIONS, UNLESS NOTED, ARE DESIGNED AS BEARING TYPE CONNECTIONS WITH BOLT THREADS NOT EXCLUDED FROM THE SHEAR PLANE.

FINAL SET OF DWGS TO BE USED FOR ERECTION
ENGINEER: B.K PH# 5372
DETAILER: CLARENCE PH# 5365
CHECKER: MIKE PH# 5376
SHIPPING: GARY C. PH# 651-5336

BK CK MKH

REVISION NO. 1	REVISION NO. 2	BUTLER MANUFACTURING COMPANY GENERAL OFFICES-KANSAS CITY, MISSOURI	PRODUCT OF THE PROVO ORDER ENGINEERING SYSTEM	BUILDER: STEELCRAFT CONST INC WOODINVILLE, WA	PROJECT: SONOBUOY STORAGE FAC OAK HARBOR, WA	BUILDING ORDER DESCRIPTION: 18X35X12 LRF 25# Roof SL + 3#CLL 80 MPH EXP C UBC 94 SEISMIC ZONE 3	DRAWING TITLE: COVER DRAWING	AG FILE NO: GROUP: V DATE: 12/10/97 DRAWING NUMBER: D97-030630-00 REV. 01
DATE 12-27-97 DRAWN BY DEPARTMENT DETAILING CHECKED BY	DATE: DRAWN BY CHECKED BY							

Y:\D\D3063001 12-11-1997 14:15:31 JOBNAME Bassam Karson

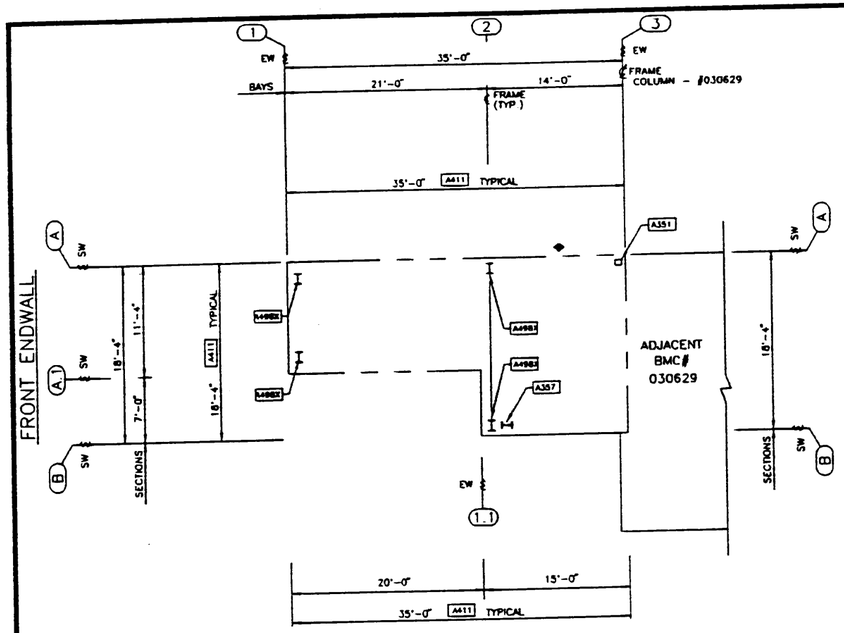

UNIT 1 ANCHOR BOLT PLAN

STANDARD NOTES:

A80007 GIVE TOP OF FOUNDATION A TROWEL FINISH. THE FOUNDATION MUST BE SQUARE, LEVEL, AND SMOOTH.

A80009 ANCHOR BOLTS MUST BE LOCATED BY MEANS OF A TEMPLATE. DO NOT HAND SET ANCHOR BOLTS.

A80010 ANCHOR BOLTS, NUTS AND WASHERS MUST BE ASTM TYPE A307.

A80013 USE REINFORCING STEEL AS REQUIRED, PROVIDE FOR HORIZONTAL LOAD ON ANCHOR BOLTS.

A80014 C A U T I O N

PIGID FRAMES HAVE BOTH HORIZONTAL AND VERTICAL REACTIONS ACTING AT THE BASE OF THE COLUMN. IN SOME CASES THE HORIZONTAL FORCE IS GREATER THAN THE VERTICAL. A FOUNDATION DESIGNED FOR A CONVENTIONAL STRUCTURE WILL NOT BE SATISFACTORY. FAILURE TO MAKE ADEQUATE PROVISION FOR THE HORIZONTAL THRUST CAN RESULT IN FOUNDATION FAILURE.

A80015 FOUNDATION DESIGN AND ANCHOR BOLTS, NUTS AND WASHERS ARE NOT FURNISHED BY BUTLER. PROPER EMBEDMENT LENGTH MUST BE DESIGNED BY FOUNDATION DESIGN ENGINEER.

A80016 REFER TO WALL PANEL ANCHOR BOLT DRAWING FOR SPECIFIC EDGE OF FOUNDATION DETAILS.

A80017 THE SOLID BLACK <> SYMBOL DESIGNATES A BRACED BAY OR SECTION.

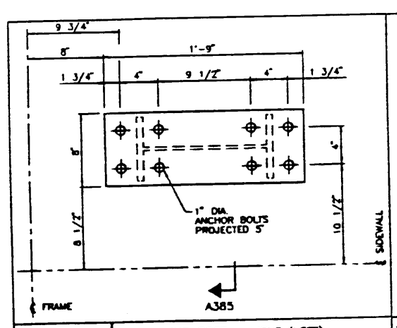

DETAIL A357 — WIND POST - LIGHT (LEFT)

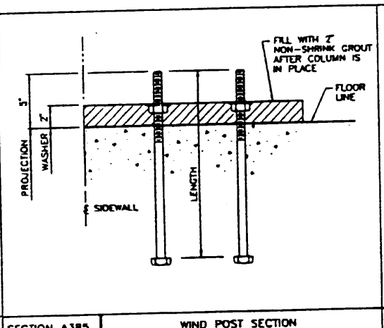

SECTION A385 — WIND POST SECTION

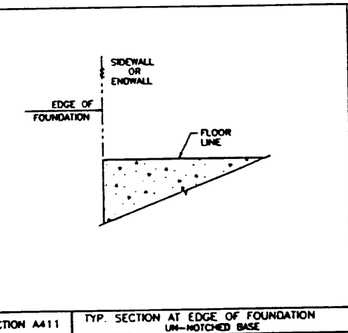

SECTION A411 — TYP. SECTION AT EDGE OF FOUNDATION UN-NOTCHED BASE

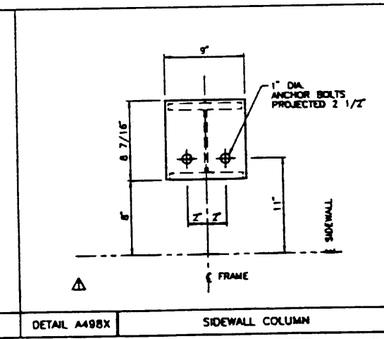

DETAIL A498X — SIDEWALL COLUMN

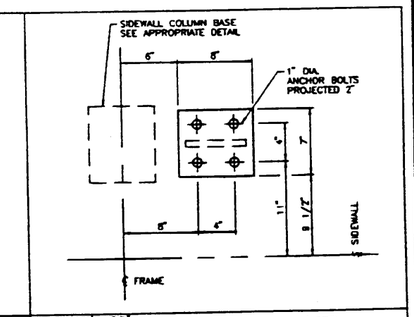

DETAIL A351 — BRACE ROD CLIP (LEFT)

REVISION NO. 1	REVISION NO. 2							
DATE 04-21-98 DRAWN BY CBRADDOM CHECKED BY	PER DRAWING APPROVAL BY BUILDER(03-09-98)	DATE: DRAWN BY CHECKED BY	BUTLER MANUFACTURING COMPANY GENERAL OFFICES-KANSAS CITY, MISSOURI	PRODUCT OF THE PRONTO ORDER ENGINEERING SYSTEM	BUILDER: STEELCRAFT CONST INC WOODINVILLE, WA	PROJECT: SONOBUOY STORAGE FAC OAK HARBOR, WA	BUILDING ORDER DESCRIPTION: 18X35X12 LRF 25# Roof SL + 3#CLL 80 MPH EXP C UBC 94 SEISMIC ZONE 3	DRAWING TITLE: SPECIFIC ANCHOR BOLT DRAWING

MJH — AG FILE NO: — GROUP: V — DATE: 12/10/97 — DRAWING NUMBER: D97-030630-01 — REV. 01

Y:\O\0305011 04-21-1998 13:55:07 USERNAME: C-Mon

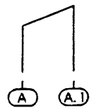

UNIT 1 – ENDWALL FRAME AT SIDEWALL GRID 1

		A		A.1	
		H	V	H	V
DL	DEAD LOAD	0.01	0.30	-0.01	0.34
CLL	COLLATERAL LOAD	0.01	0.19	-0.01	0.19
SL	SNOW LOAD	0.04	1.56	-0.04	1.56
WLL	WIND LOAD LEFT	-1.64	-2.64	-1.13	0.70
WLR	WIND LOAD RIGHT	1.70	1.80	1.75	-3.31
IP	WIND INT PRESSURE	0.22	-0.74	0.22	-1.85
EQ	SEISMIC LOAD	-0.09	-0.17	-0.07	0.17
SLL	MIN SNOW LOAD LEFT	0.02	0.66	-0.02	0.66
EWP	EW WIND PRESSURE	0.66	-0.78	-0.66	-0.73
EWS	EW WIND SUCTION	0.66	-0.78	-0.66	-0.73
	MAX. POS. REACTION	1.73	3.07	1.74	3.86
	MAX. NEG. REACTION	-1.85	-2.34	-1.38	-2.97

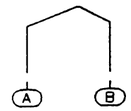

UNIT 1 – FRAME AT SIDEWALL GRID 2

		A		B	
		H	V	H	V
DL	DEAD LOAD	0.09	0.73	-0.09	0.75
CLL	COLLATERAL LOAD	0.09	0.60	-0.09	0.60
SL	SNOW LOAD	0.71	5.01	-0.71	5.01
WLL	WIND LOAD LEFT	-2.91	-4.57	-1.52	-1.15
WLR	WIND LOAD RIGHT	1.90	-0.63	3.02	-4.76
IP	WIND INT PRESSURE	0.05	-3.07	0.81	-2.09
IS	WIND INT SUCTION	-0.46	-0.87	-0.07	-2.31
EQ	SEISMIC LOAD	-0.42	-0.53	-0.37	0.53
SLL	MIN SNOW LOAD LEFT	0.49	4.44	-0.49	1.75
SLR	MIN SNOW LOAD RIGHT	0.22	0.57	-0.22	3.26
EWP	EW WIND PRESSURE	0.83	-2.41	-0.79	-2.45
EWS	EW WIND SUCTION	0.83	-2.41	-0.79	-2.45
	MAX. POS. REACTION	2.90	6.47	3.00	6.83
	MAX. NEG. REACTION	-2.86	-3.84	-2.86	-4.01

BRACED BAY REACTION – UNIT 1

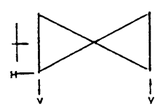

SIDEWALL GRID	BETWEEN GRIDS	H	V
A	1 – 2	2	1

SIDEWALL WINDPOST REACTION – UNIT 1

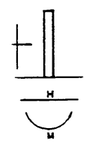

SIDEWALL GRID	FRAME GRID	SIDE OF FRAME	H	M
B	2	LEFT	2	182

REACTION NOTES:

1. THE VERTICAL (V) AND HORIZONTAL (H AND Z) REACTION ARE STATED IN KIPS. (1 KIP = 1000 POUNDS) POSITIVE DIRECTION IS AS SHOWN IN THE FOLLOWING DIAGRAM.
2. MOMENT REACTIONS ARE STATED IN INCH–KIPS AND ARE POSITIVE IN A CLOCKWISE DIRECTION.
3. THE FORCE ON THE ANCHOR BOLTS OR FOUNDATION WILL BE IN THE OPPOSITE DIRECTION TO THAT SHOWN.
4. MINIMUM REACTION SUMMARY IS THE MAXIMUM POSITIVE AND NEGATIVE REACTIONS BASED ON THE REQUIRED LOAD COMBINATIONS.

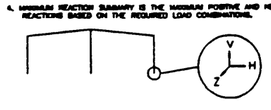

Cp

Blc

REVISION NO. 1		REVISION NO. 2	
DATE:		DATE:	
DRAWN BY:		DRAWN BY:	
CHECKED BY:		CHECKED BY:	

BUTLER MANUFACTURING COMPANY
GENERAL OFFICES-KANSAS CITY, MISSOURI

PRODUCT OF THE PRONTO ORDER ENGINEERING SYSTEM

BUILDER:	PROJECT:	BUILDING ORDER DESCRIPTION:	DRAWING TITLE:	NLH	AG FILE NO:
STEELCRAFT CONST INC WOODINVILLE, WA	SONOBUOY STORAGE FAC OAK HARBOR, WA	18X35X12 LRF 25# Roof SL + 3#CLL 80 MPH EXP C UBC 94 SEISMIC ZONE 3	SPECIFIC REACTION DRAWING	GROUP: V	DATE: 12/10/97
				DRAWING NUMBER: D97-030630-01A	REV. 00

USERNAME: Lowry Shamrouleh 12-11-1997 12:17:37 Y:\D\030630\1A

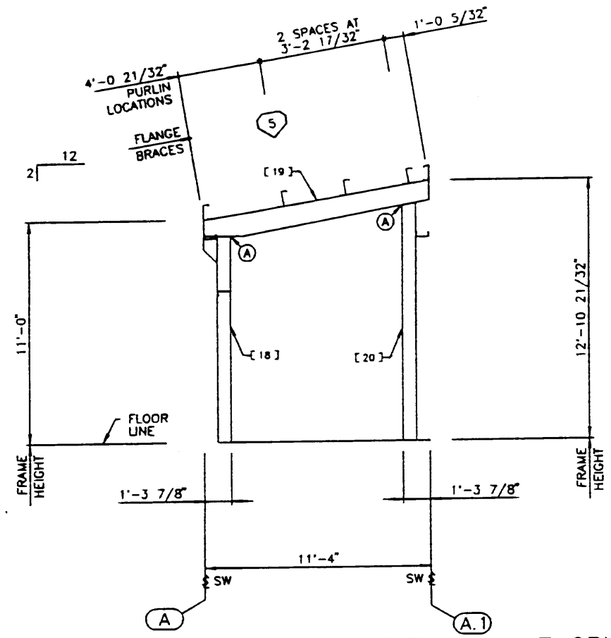

UNIT 1 FRONT EW ELEVATION AT GRID 1

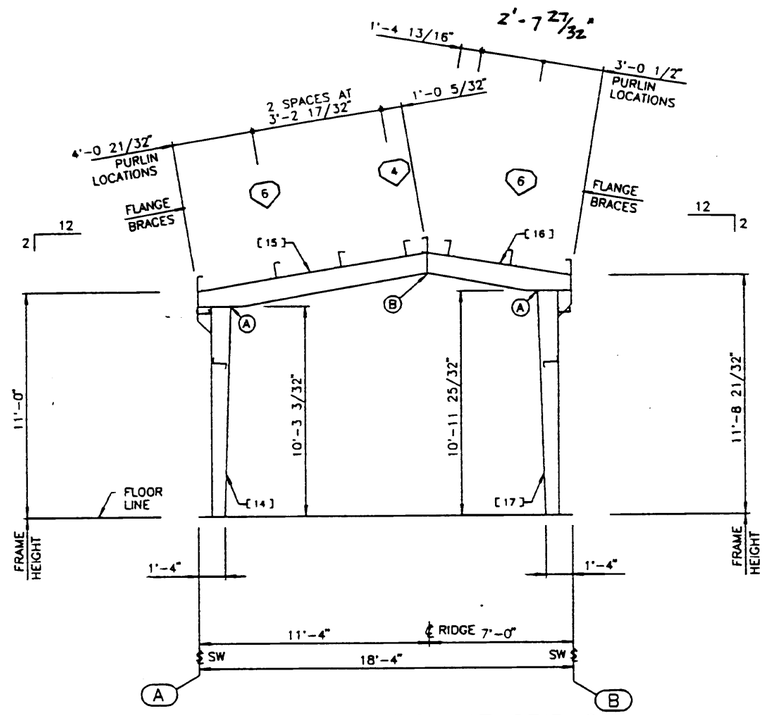

UNIT 1 FRAME ELEVATION AT GRID 2

PART SCHEDULE				
[ ]	PART NAME	PART NUMBER	PART LENGTH	FIELD WORK ▲
18	EW CORNER POST	V72100	10'-2 13/32"	
19	EW ROOF BEAM	V72105	11'-5 5/8"	
20	EW CORNER POST	V72110	11'-9 11/32"	
14	EXTERIOR COLUMN	V72080	10'-3 3/32"	
15	ROOF BEAM	V72085	11'-5 3/4"	
16	ROOF BEAM	V72090	7'-1 1/32"	
17	EXTERIOR COLUMN	V72095	10'-11 25/32"	

BOLTED CONNECTION SCHEDULE					
○	QUANTITY	BOLT NO.	DESCRIPTION	NUT NO.	DETAIL
A	08	097282	5/8X2-1/4 BOLT A325T	095233	
B	04	097282	5/8X2-1/4 BOLT A325T	095233	

FLANGE BRACE SCHEDULE					
⬡	PART NO. FRONT/LEFT	PART NO. REAR/RIGHT	DIM. "Y"	DETAIL	FIELD WORK ▲
5	005673		2'-4 1/2"	C001	
4	005660		1'-4 1/2"	C001	
6	005673		2'-4 1/2"	C001	

STANDARD NOTES:

IF0001 ALL HIGH STRENGTH BOLTS ARE A-325-T WITH HEAVY HEX NUTS AND ARE TO BE INSTALLED USING THE "TURN-OF-THE-NUT" METHOD SPECIFIED IN THE NINTH EDITION OF THE AISC "SPECIFICATION FOR STRUCTURAL JOINTS USING ASTM A325 OR A490 BOLTS" PER SECTION 8 D (1). A-325 BOLTS MAY BE INSTALLED WITHOUT WASHERS WHEN TIGHTENED BY THE "TURN-OF-THE-NUT" METHOD. IT IS THE RESPONSIBILITY OF THE ERECTOR TO ASSURE PROPER TIGHTNESS. SEE INSTALLATION OF A-325T BOLT DRAWING 1080268 (GROUP 78-052-01).

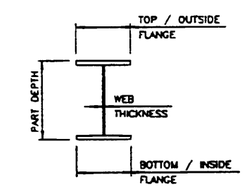

FRAME DESIGN INFORMATION	
PART	DESCRIPTION
ROOF BEAM V72085 137-6	TOP FLANGE = 5" X .188"
	BOTTOM FLANGE = 5" X .188"
	WEB THICKNESS = .120"
	PART DEPTH = VARIES 13 5/32" TO 11 7/8"
ROOF BEAM V72090 085-0	TOP FLANGE = 5" X .188"
	BOTTOM FLANGE = 5" X .188"
	WEB THICKNESS = .120"
	PART DEPTH = VARIES 13 5/32" TO 11 7/8"
EXTERIOR COLUMN V72080 123-1	TOP FLANGE = 5" X .188"
	BOTTOM FLANGE = 5" X .188"
	WEB THICKNESS = .120"
	PART DEPTH = VARIES 8" TO 12"
EXTERIOR COLUMN V72095 131-6	TOP FLANGE = 5" X .188"
	BOTTOM FLANGE = 5" X .188"
	WEB THICKNESS = .120"
	PART DEPTH = VARIES 8" TO 12"
EW CORNER POS V72100 122-3	TOP FLANGE = 5" X .188"
	BOTTOM FLANGE = 5" X .188"
	WEB THICKNESS = .120"
	PART DEPTH = 7 7/8"
EW ROOF BEAM V72105 137-5	TOP FLANGE = 5" X .188"
	BOTTOM FLANGE = 5" X .188"
	WEB THICKNESS = .120"
	PART DEPTH = VARIES 13 3/16" TO 11 1/2"
EW CORNER POS V72110 141-3	TOP FLANGE = 5" X .188"
	BOTTOM FLANGE = 5" X .188"
	WEB THICKNESS = .120"
	PART DEPTH = 7 7/8"

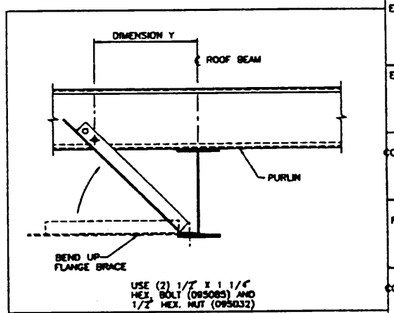

DETAIL C001 — SINGLE FLANGE BRACE CONNECTION USE FIRST HOLE AT PURLIN CONNECTION

BK

REVISION NO. 1	REVISION NO. 2						
DATE: 04-22-98	DETAILING REVISION NO. 1	DATE:		BUTLER MANUFACTURING COMPANY GENERAL OFFICES-KANSAS CITY, MISSOURI	PRODUCT OF THE PRONTO ORDER ENGINEERING SYSTEM	BUILDER: STEELCRAFT CONST INC WOODINVILLE, WA	PROJECT: SONOBUOY STORAGE FAC OAK HARBOR, WA
DRAWN BY: CBRANDAN		DRAWN BY:					
CHECKED BY:		CHECKED BY:					

BUILDING ORDER DESCRIPTION: 18X35X12 LRF 25# Roof SL + 3#CLL 80 MPH EXP C UBC 94 SEISMIC ZONE 3

DRAWING TITLE: CROSS SECTION ERECTION DRAWING

GROUP: V

AG FILE NO:

DATE: 12/10/97

DRAWING NUMBER: D97-030630-02

REV. 01

USERNAME: C-Mon 04-22-1998 08:08:43 Y:\D\03083021

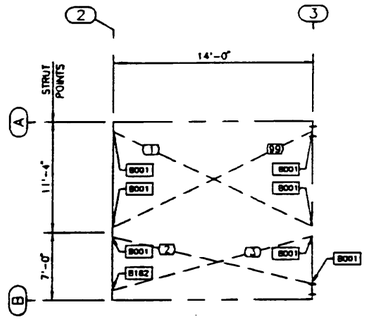

UNIT 1 ROOF BRACING

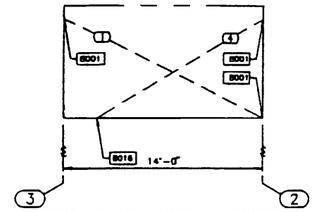

UNIT 1 SIDEWALL BRACING
AT GRID A

BRACE ROD SCHEDULE				
⬭	PART NUMBER	DESCRIPTION	THREAD	TURNBUCKLE
1	544048 -213	5/8" BRACE ROD	RH-RH	NONE
2	544048 -186	5/8" BRACE ROD	RH-RH	NONE
3	544048 -171	5/8" BRACE ROD	RH-RH	NONE
4	544048 -200	5/8" BRACE ROD	RH-RH	NONE
99	544048 -212	5/8" BRACE ROD	RH-RH	NONE

ROD DIA.	NUT	WASHERS A	WASHERS B	WASHERS C
7/16"	095083	095133	095165	020821
1/2"	095032	095133	095165	020821
5/8"	095231	095298	095165	020821
3/4"	095235	095264	095948	020822
7/8"	095237	095264	095948	020822

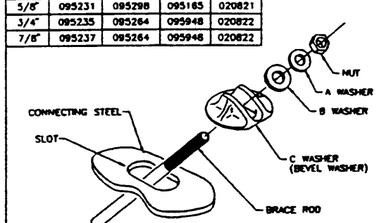

DETAIL B001 — TYPICAL BEVEL WASHER CONN.

ROD DIA.	CLEVIS ASSY.
3/8"	095277
3/4"	095278
7/8"	095279
1"	095280
1 1/8"	095281
1 1/4"	095282

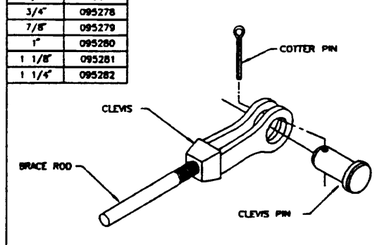

DETAIL B002 — TYPICAL CLEVIS CONNECTION

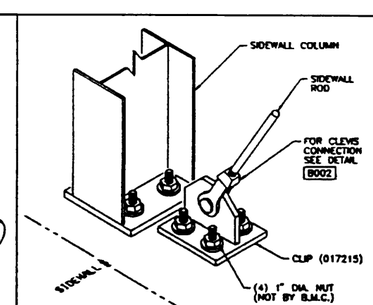

DETAIL B016 — CLEVIS CONNECTION AT FLOOR
INTERMEDIATE BAY BRACING

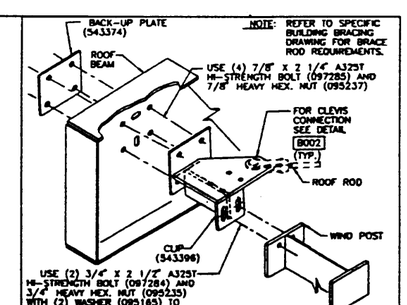

NOTE: REFER TO SPECIFIC BUILDING BRACING DRAWING FOR BRACE ROD REQUIREMENTS.

DETAIL B182 — WIND POST TOP CONNECTION AT EAVE.
FRAME LOCATION 8" OFF STRUCTURAL LINE

BK CP

REVISION NO. 1		REVISION NO. 2	
DATE 04-22-98	DETAILING REVISION NO. 1	DATE:	
DRAWN BY CEDARDONE		DRAWN BY	
CHECKED BY		CHECKED BY	

BUTLER MANUFACTURING COMPANY
GENERAL OFFICES-KANSAS CITY, MISSOURI

PRODUCT OF THE PRONTO ORDER ENGINEERING SYSTEM

BUILDER:	PROJECT:	BUILDING ORDER DESCRIPTION:	DRAWING TITLE:	MLH	AG FILE NO:
STEELCRAFT CONST INC WOODINVILLE, WA	SONOBUOY STORAGE FAC OAK HARBOR, WA	18X35X12 LRF 25# Roof SL + 3#CLL 80 MPH EXP C UBC 94 SEISMIC ZONE 3	WIND BRACING DRAWING	GROUP: V	DATE: 12/10/97
				DRAWING NUMBER: D97-030630-03	REV. 01

USERNAME: C-Mon 04-22-1998 10:13:44 Y:\D\D3063031

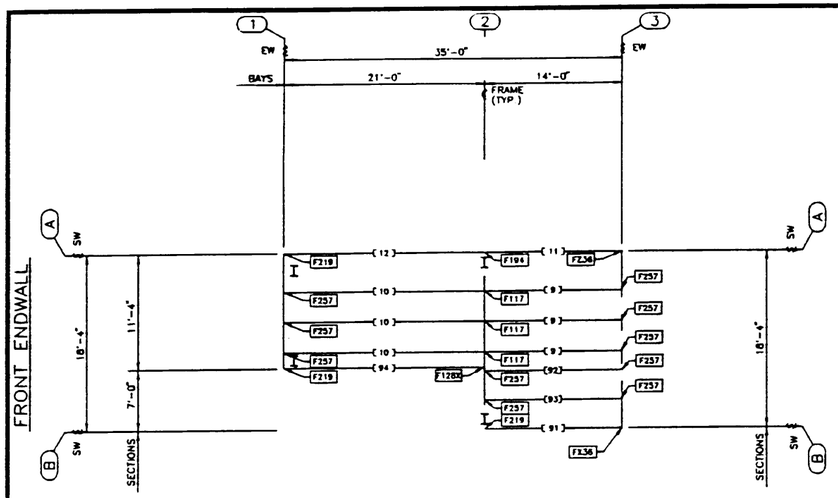

UNIT 1 ROOF SECONDARY STRUCTURAL FRAMING PLAN

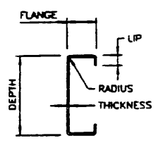

C – SECTION DESIGN INFORMATION					
PART	DEPTH	FLANGE	LIP	THICKNESS	RADIUS
EAVE STRUT 540329	9 1/2"	3 1/2"	1 1/8"	.089"	5/16"
EAVE STRUT 540356	9 1/2"	3 1/2"	1 1/8"	.098"	5/16"

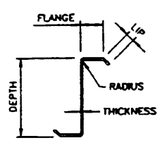

Z – SECTION DESIGN INFORMATION					
PART	DEPTH	FLANGE	LIP	THICKNESS	RADIUS
PURLIN 530643	9 1/2"	2 3/4"	1 1/16"	.073"	1/4"

PART SCHEDULE				
[ ]	PART NAME	PART NUMBER	PART LENGTH	FIELD WORK ▲
9	PURLIN	530643 209-4	17'-5 1/2"	
10	PURLIN	530643 287-4	23'-11 1/2"	
11	EAVE STRUT	540329 173-4	14'-5 1/2"	
12	EAVE STRUT	540329 251-4	20'-11 1/2"	
91	EAVE STRUT	540329 185-4	15'- 5 1/2"	
92	PURLIN	530643 185-4	15'- 5 1/2"	
93	PURLIN	530643 185-4	15'- 5 1/2"	
94	EAVE STRUT	540356 254-4	21'-2 1/2"	

PURLIN BRACE LOCATION SCHEDULE					
BETWEEN GRIDS	LOCATION DETAIL	BRACE SECTION TOP	BRACE SECTION BOTTOM	DIM. "B"	RIDGE BRACE
1 AND 2	F146	(2) A	–0–	5'-4 1/2"	
2 AND 3	F151	(1) C	–0–		(1)0544195

STANDARD NOTES:

RS0006 REFER TO DRAWING B-1080946 FOR PURLIN BRACE PART NUMBERS AND TYPICAL INSTALLATION FOR SLOPE GREATER THAN 0.75:12.

RS0008 REFER TO DETAIL F262 FOR RIDGE PURLIN BRACE CONNECTION.

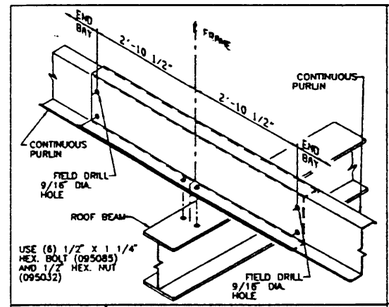

DETAIL F117 — CONTINUOUS SPAN PURLIN CONNECTION TWO (2) BAY BUILDING – 9 1/2" PURLIN

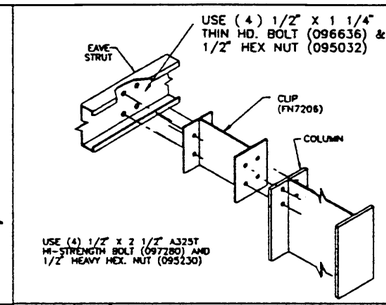

DETAIL FX36 — EAVE STRUT TO COLUMN CONNECTION

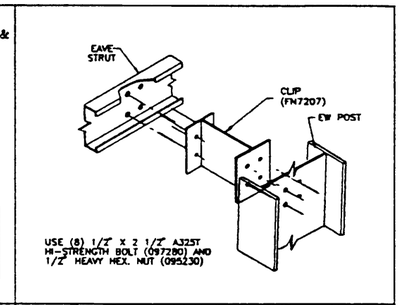

DETAIL FZ36 — EAVE STRUT TO EW POST CONNECTION

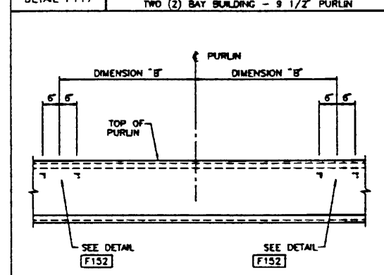

DETAIL F146 — PURLIN BRACE LAYOUT (2) ROWS TOP – (0) ROWS BOTTOM

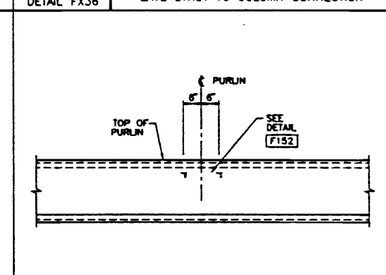

DETAIL F151 — PURLIN BRACE LAYOUT (1) ROW TOP – (0) ROWS BOTTOM

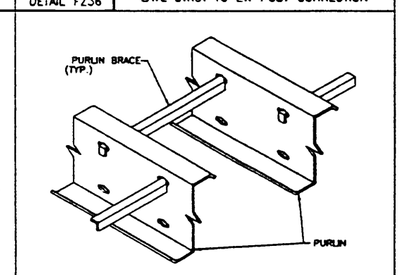

DETAIL F152 — PURLIN BRACE TOP ROW

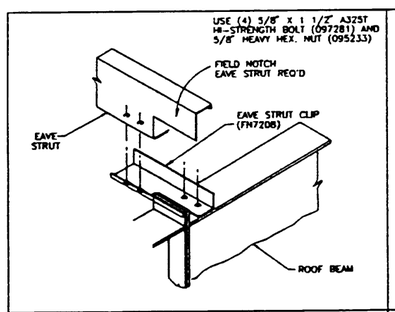

DETAIL F128X — EAVE STRUT CONN. TO INT. FRAME ENDWALL

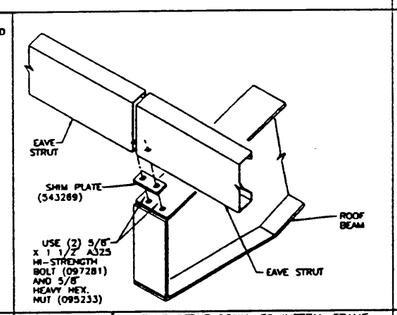

DETAIL F194 — EAVE STRUT CONN. TO INTERM. FRAME 2:12 ROOF SLOPE

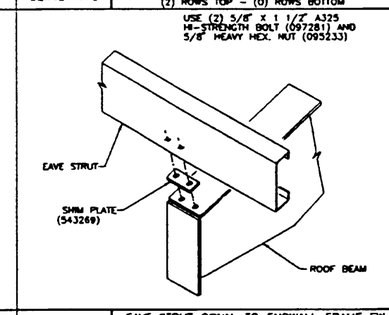

DETAIL F219 — EAVE STRUT CONN. TO ENDWALL FRAME EW 2:12 ROOF SLOPE

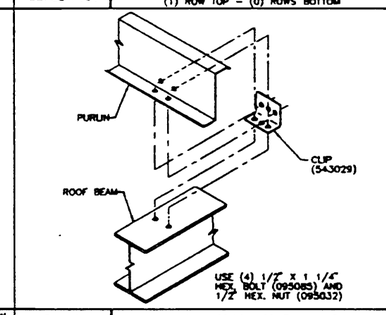

DETAIL F257 — PURLIN CONNECTION TO EW ROOF BEAM

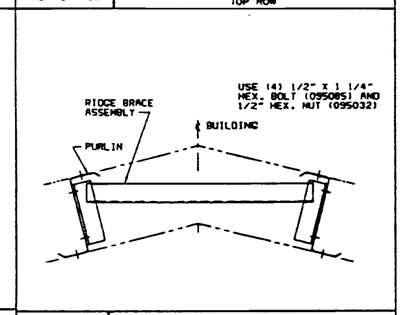

DETAIL F262 — RIDGE CHANNEL CONNECTION

REVISION NO. 1	REVISION NO. 2
DATE 04-22-98	DATE
DRAWN BY CORRECTION	DRAWN BY
DETAILING REVISION NO. 1	
CHECKED BY	CHECKED BY

BUTLER MANUFACTURING COMPANY
GENERAL OFFICES-KANSAS CITY, MISSOURI

PRODUCT OF THE PRONTO ORDER ENGINEERING SYSTEM

BUILDER:	PROJECT:	BUILDING ORDER DESCRIPTION:	DRAWING TITLE:	MLH / BF	AG FILE NO:
STEELCRAFT CONST INC WOODINVILLE, WA	SONOBUOY STORAGE FAC OAK HARBOR, WA	18X35X12 LRF 25# Roof SL + 3#CLL 80 MPH EXP C UBC 94 SEISMIC ZONE 3	ROOF SECONDARY STRUCTURAL FRAMING PLAN	GROUP: V	DATE: 12/10/97
				DRAWING NUMBER: D97-030630-04	REV. 01

USERNAME: C-Mon 04-22-1998 10:44:15 Y:\D\03063041

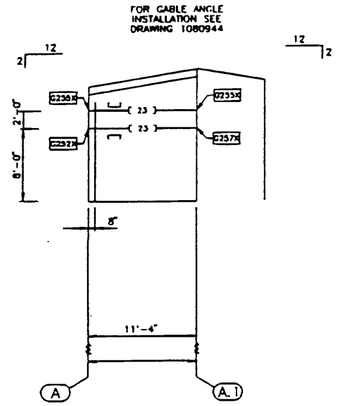

UNIT 1 FRONT EW STRUCTURAL ELEVATION AT GRID 1

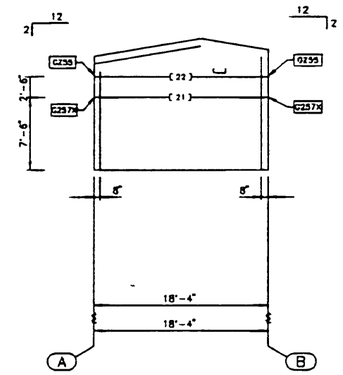

UNIT 1 EW STRUCTURAL ELEVATION AT GRID 1.1

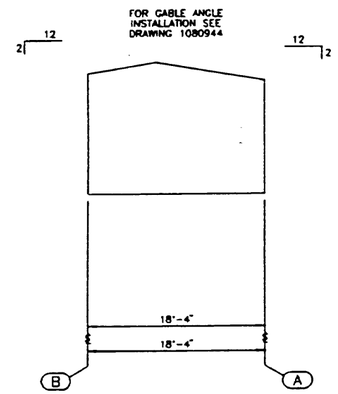

UNIT 1 REAR EW STRUCTURAL ELEVATION AT GRID 3

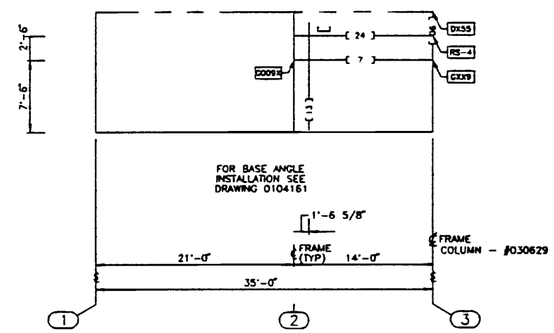

UNIT 1 RIGHT SW STRUCTURAL ELEVATION AT GRID B

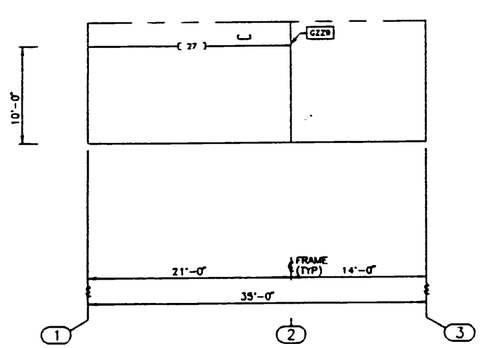

UNIT 1 RIGHT SW STRUCTURAL ELEVATION AT GRID A.1

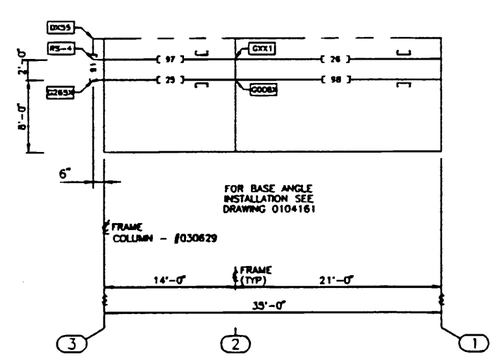

UNIT 1 LEFT SW STRUCTURAL ELEVATION AT GRID A

PART SCHEDULE				
[ ]	PART NAME	PART NUMBER	PART LENGTH	FIELD WORK ▲
21	GIRT	550296 157-2	13'-1 1/4"	1
22	'C' GIRT	702143 219-4	18'-3 1/2"	
23	'C' GIRT	702143 135-4	11'-3 1/2"	
24	'C' GIRT	702143 185-4	15'-5 1/2"	
7	GIRT	550298 175-2	14'-7 1/4"	
27	GIRT	550298 247-2	20'-7 1/4"	
13	WIND POST	544171 137-7	11'-5 7/8"	
26	'C' GIRT	702143 251-4	20'-11 1/2"	
98	'C' GIRT	702143 241-2	20'-1 1/4"	
25	'C' GIRT	702143 168-2	14'-0 1/4"	
97	'C' GIRT	702143 173-2	14'-5 1/4"	
90	'C' GIRT	702143 095-4	7'-11 1/2"	2
91	'C' GIRT	702143 095-4	7'-11 1/2"	3

• BUILDER TO SNAP CHALK LINE & FIELD SLOT GIRTS FOR BRACE RODS.

FIELD WORK SCHEDULE				
△	DETAIL	FIELD WORK DIMENSIONS		
1	X042	A = 12'-9 3/8"	B = 3 7/8"	C = 7/8"
		D = 3"		
2	X042	A = 3'-9 7/16"	B = 4'-2 1/16"	C = 1 1/4"
		D = 3		
3	X042	A = 2'-6 3/4"	B = 5'-4 3/4"	C = 1 1/4"
		D = 3		

STANDARD NOTES:

WS0023 I M P O R T A N T
REFER TO PRONTO DETAIL G047 FOR PROPER GIRT ALIGNMENT.

•NOTE: BUILDER TO FIELD LOCATE AND FIELD WORK ALL FRAMED OPENINGS. REFER TO PLANOGRAPH #10801159, #1081161, #1081163, & #1081173 FOR DETAILS.

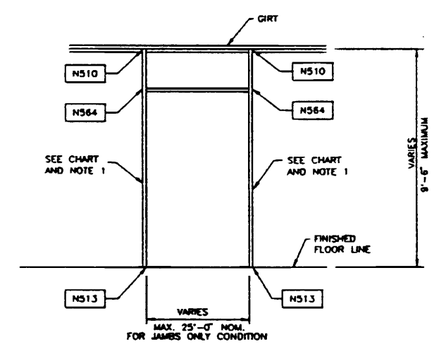

FRAMED OPENING
BETWEEN FLOOR AND 9-1/2" GIRTS
WITH JAMBS ONLY

Y:\D\03063051
04-22-1998 10:00:03
USERNAME: C-Wen

REVISION NO. 1	REVISION NO. 2							
DATE 04-22-98	DETAILING REVISION NO. 1	DATE:	BUTLER MANUFACTURING COMPANY GENERAL OFFICES-KANSAS CITY, MISSOURI	PRODUCT OF THE PRONTO ORDER ENGINEERING SYSTEM	BUILDER: STEELCRAFT CONST INC WOODINVILLE, WA	PROJECT: SONOBUOY STORAGE FAC OAK HARBOR, WA	BUILDING ORDER DESCRIPTION: 18X35X12 LRF 25# Roof SL + 3#CLL 80 MPH EXP C UBC 94 SEISMIC ZONE 3	DRAWING TITLE: WALL SECONDARY STRUCTURAL ELEVATION
DRAWN BY CEBARCHER		DRAWN BY						
CHECKED BY		CHECKED BY						

CB MLH BK

AG FILE NO:
GROUP: V
DATE: 12/10/97
DRAWING NUMBER: D97-030630-05
REV. 01

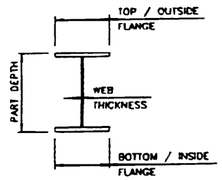

FRAME DESIGN INFORMATION

PART	DESCRIPTION
WIND POST 544171 135-3	TOP FLANGE = 6" X .375"
	BOTTOM FLANGE = 6" X .375"
	WEB THICKNESS = .120"
	PART DEPTH = 14 1/4"

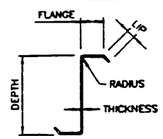

Z – SECTION DESIGN INFORMATION

PART	DEPTH	FLANGE	LIP	THICKNESS	RADIUS
GIRT 550296	9 1/2"			.067"	1/4"

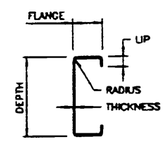

C – SECTION DESIGN INFORMATION

PART	DEPTH	FLANGE	LIP	THICKNESS	RADIUS
702143	8"	3 1/2"	1 3/8"	.100	5/16"

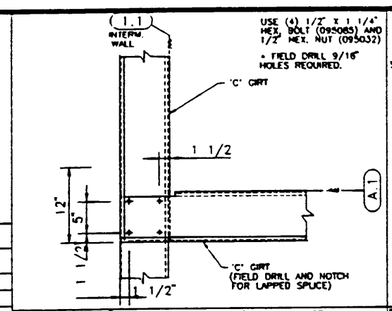

DETAIL GZZ9 — 8" SW TO 8" INTERM GIRT

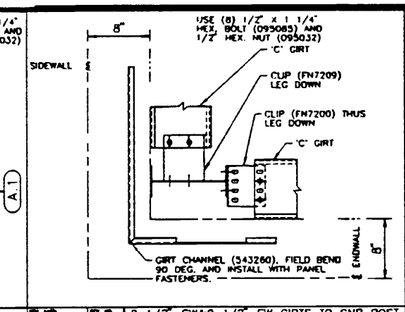

DETAIL G252X — 9 1/2" SW&9 1/2" EW GIRTS TO CNR POST, 6" SETBACK ENDWALL

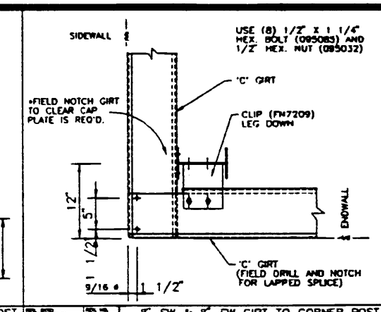

DETAIL G255X — 8" SW & 8" EW GIRT TO CORNER POST, 12" SETBACK ENDWALL

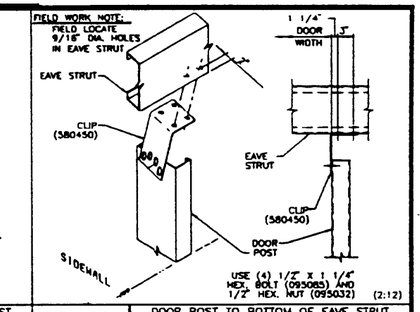

DETAIL DX55 — DOOR POST TO BOTTOM OF EAVE STRUT, POST TOP CLIP – OVERHEAD DOOR

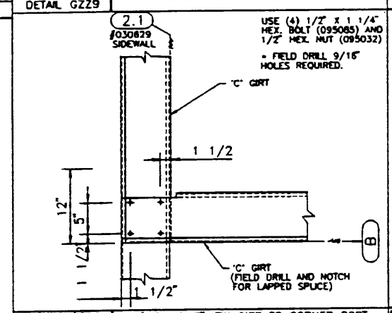

DETAIL GXX9 — 8" SW & 8" EW GIRT TO CORNER POST, 12" SETBACK ENDWALL

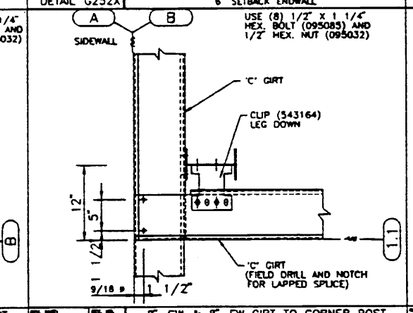

DETAIL GZ55 — 8" SW & 8" EW GIRT TO CORNER POST, 12" SETBACK ENDWALL

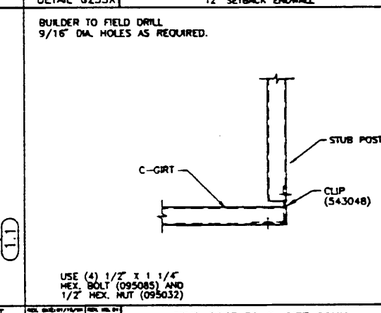

DETAIL RS-4 — STUB POST TO C-GIRT CONN.

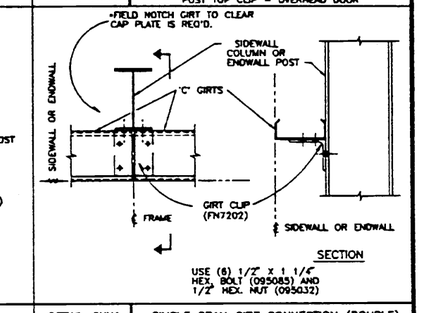

DETAIL GXX1 — SIMPLE SPAN GIRT CONNECTION (DOUBLE)

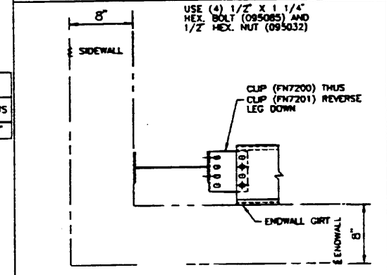

DETAIL G257X — 9 1/2" EW GIRT TO H-SECTION CORNER POST, 6" SETBACK ENDWALL

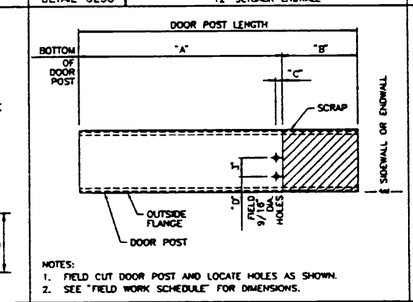

NOTES:
1. FIELD CUT DOOR POST AND LOCATE HOLES AS SHOWN.
2. SEE "FIELD WORK SCHEDULE" FOR DIMENSIONS.

DETAIL X042 — FIELD WORK DOOR POST

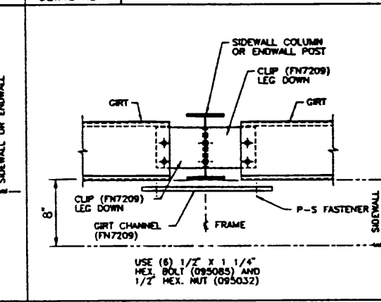

DETAIL G008X — DOUBLE GIRT TO COLUMN CONNECTION

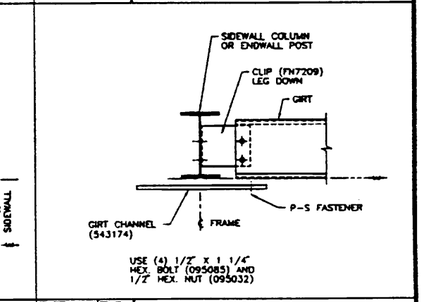

DETAIL G009X — SINGLE GIRT TO COLUMN CONNECTION

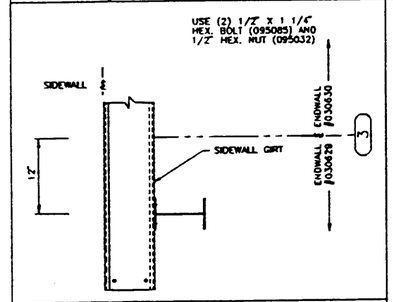

DETAIL G265X — 8" SIDEWALL GIRT TO CORNER POST, 12" SETBACK ENDWALL

REVISION NO. 1		REVISION NO. 2	
DATE: 04-22-98	DETAILING REVISION NO. 1	DATE:	
DRAWN BY: CRAWFORD		DRAWN BY:	
CHECKED BY:		CHECKED BY:	

BUTLER MANUFACTURING COMPANY
GENERAL OFFICES-KANSAS CITY, MISSOURI

PRODUCT OF THE PRONTO ORDER ENGINEERING SYSTEM

BUILDER:	PROJECT:	BUILDING ORDER DESCRIPTION:	DRAWING TITLE:	AC FILE NO:
STEELCRAFT CONST INC WOODINVILLE, WA	SONOBUOY STORAGE FAC OAK HARBOR, WA	18X35X12 LRF 25# Roof SL + 3#CLL 80 MPH EXP C UBC 94 SEISMIC ZONE 3	WALL SECONDARY STRUCTURAL ELEVATION DETAIL SHEET	GROUP: V / DATE: 12/10/97
				DRAWING NUMBER: D97-030630-05B / REV. 01

USERNAME: C-Mon 04-22-1998 13:00:09 Y:\D\030630\58

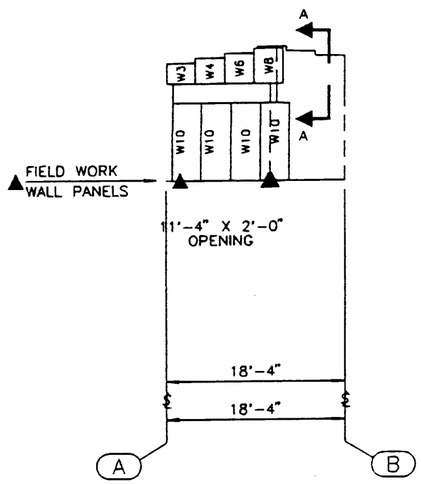

FRONT EW PANELING ELEVATION
AT GRID 1

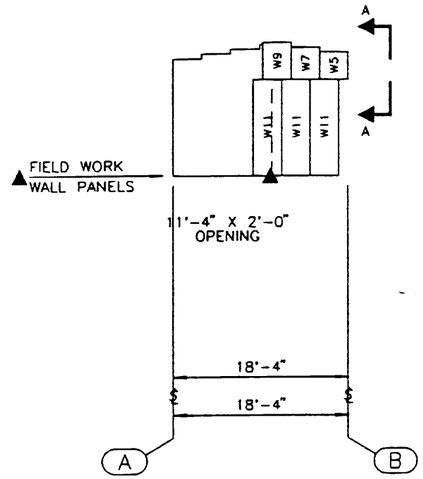

PANELING ELEVATION
AT GRID 1.1

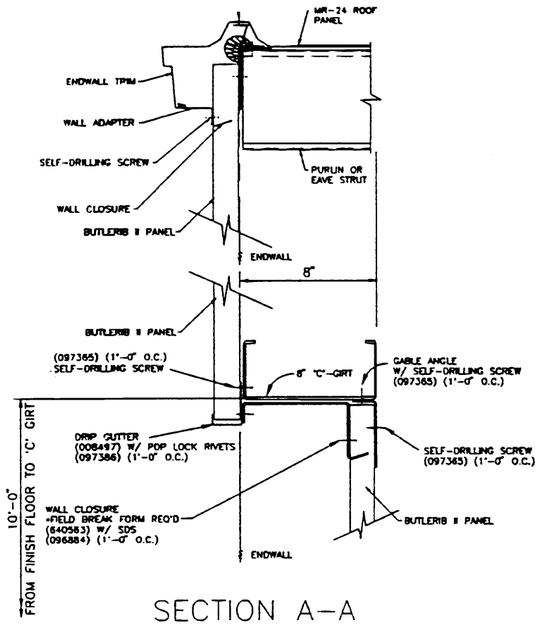

SECTION A-A

WALL PANEL SCHEDULE					
ID	PART NUMBER	EXT. SUFF.	INT. SUFF.	LENGTH	DESCRIPTION
W2	027095	864		045-1	BRII HDR SQ STONE WH
W3	570528	864		027-2	BRII HDR SQ STONE WH
W4	570528	864		033-2	BRII HDR SQ STONE WH
W5	570528	864		036-0	BRII HDR SQ STONE WH
W6	570528	864		039-2	BRII HDR SQ STONE WH
W7	570528	864		042-0	BRII HDR SQ STONE WH
W8	570528	864		045-2	BRII HDR SQ STONE WH
W9	570528	864		048-2	BRII HDR SQ STONE WH
W10	027162	864		096-5	BRII SQ PUN STONE WH
W11	027162	864		120-5	BRII SQ PUN STONE WH
W12	027095	864		031-2	BRII HDR SQ STONE WH
W1	027095	864		022-5	BRII HDR SQ STONE WH

STANDARD NOTES:

WP0014 BRII WALL PANEL-TO-PANEL FASTENERS ARE 097364 (1/4 X 3/4 T-30 TORX SELF DRILLING SCREW).

WP0019 BRII WALL PANEL-TO-STRUCTURAL TOP/BASE FASTENERS ARE 097361 (11/32 X 7/8 T-45 TORX SCRUBOLT).

WP0028 FOR GENERAL BRII WALL PNL INFO. REFER TO THE FOLLOWING DWGS :

104217 - GENERAL PANELING INFORMATION
105017 - INSULATION AT TOP OF WALL-SIDEWALL
105018 - INSULATION AT TOP OF WALL-ENDWALL
1080854 - WALL PANEL LENGTH CALCULATIONS
1080873 - GENERAL INSTALLATION TORX FASTENERS

WP0030 THE DIRECTION OF ERECTION FOR BUTLERIB II WALL PANEL IS LEFT-TO-RIGHT.

IMPORTANT APPEARANCE ITEM
FIELD TRIM INSULATION SO THAT THERE IS MAXIMUM OF 3" THICKNESS BETWEEN STRUCTURALS AND FLAT SURFACE OF WALL PANEL. WHEN TRIMMING INSULATION, BE CAREFUL NOT TO CUT VAPOR RETARDER.

WP0075 BRII WALL PANEL-TO-GIRT FASTENERS ARE 097361 (11/32 X 7/8 T-45 TORX SCRUBOLT).

UNPUNCHED DOOR SIDE GIRTS REQUIRE FIELD DRILLED 5/16" HOLES.

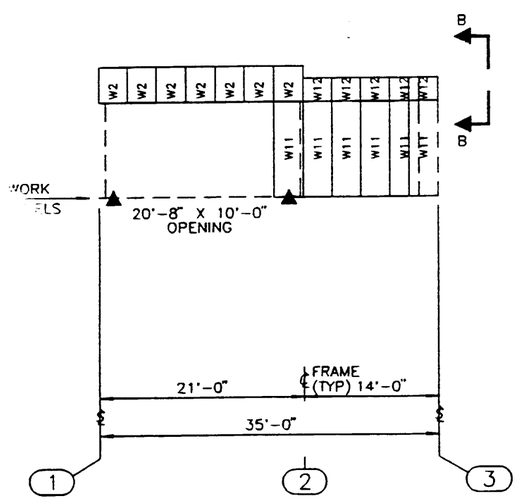

RIGHT SIDEWALL PANELING ELEVATION
AT GRID B

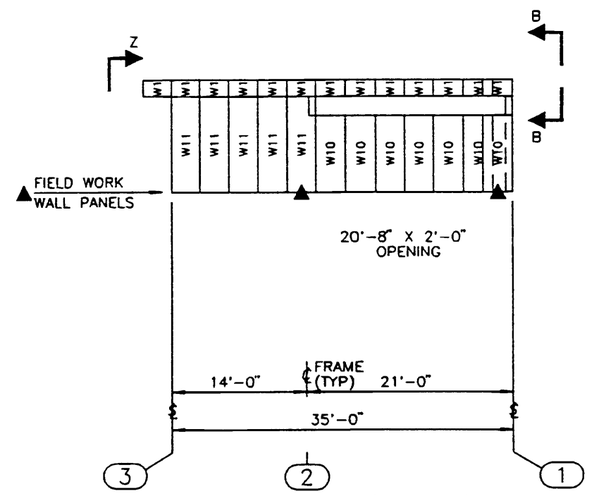

LEFT SIDEWALL PANELING ELEVATION
AT GRID A

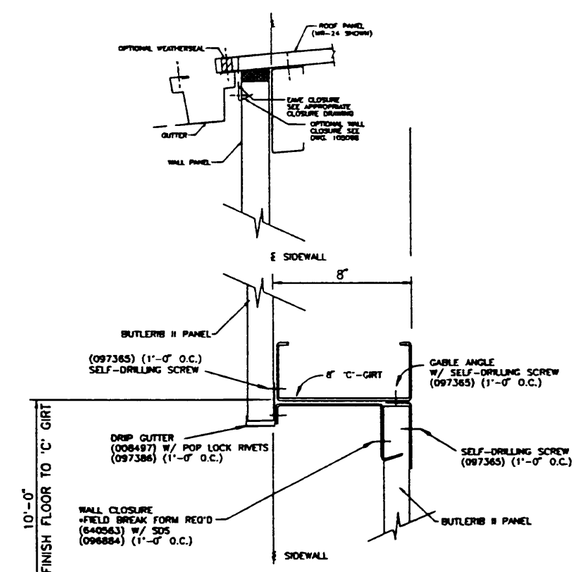

SECTION B-B

BIL
cb

REVISION NO. 1	REVISION NO. 2		BUILDER:	PROJECT:	BUILDING ORDER DESCRIPTION:	DRAWING TITLE:	MLH	AG FILE NO:
DATE:	DATE:	BUTLER MANUFACTURING COMPANY GENERAL OFFICES-KANSAS CITY, MISSOURI	STEELCRAFT CONST INC WOODINVILLE, WA	SONOBUOY STORAGE FAC OAK HARBOR, WA	18X35X12 LRF 25# Roof SL + 3#CLL 80 MPH EXP C UBC 94 SEISMIC ZONE 3	WALL PANEL DRAWING	GROUP: V	DATE: 04/22/98
DRAWN BY:	DRAWN BY:	PRODUCT OF THE PRONTO ORDER ENGINEERING SYSTEM					DRAWING NUMBER: D97-030630-06	REV. 00
CHECKED BY:	CHECKED BY:							

USERNAME: C-Mon 04-24-1998 13:56:18 Y:\D\030630\01

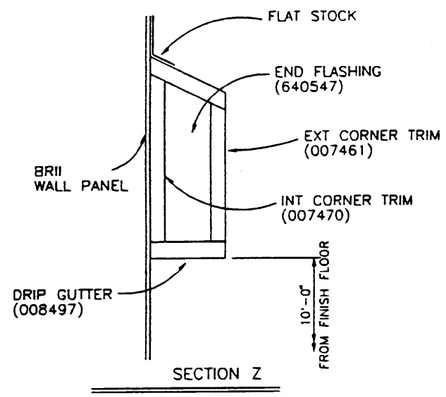

SECTION Z

*BUILDER TO FIELD MODIFY COMPONENTS

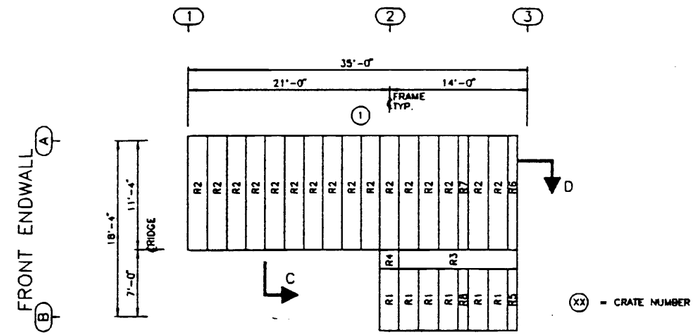

ROOF PANEL SCHEDULE					
ID	PART NUMBER	SUFF.	LENGTH	DESCRIPTION	HOLE TO HOLE
R1	560117	865	077-0	MR24 EAVE PANEL STONE WH	
R2	560117	865	149-1	MR24 EAVE PANEL STONE WH	
R3	560157	058		MR24 RIDGE COVER	
R4	560173			MR24 RIDGE END COVER	
R5	560588	865	077-0	18" MR24 PANEL STONE W	
R6	560588	865	149-1	18" MR24 PANEL STONE W	
R8	560586	865	077-0	12" MR24 PANEL STONE W	
R7	560586	865	149-1	12" MR24 PANEL STONE W	

STANDARD NOTES:

RP0031 REFER TO GENERAL ROOF INDEX DRAWING 1081111 FOR ADDITIONAL ERECTION DRAWING REQUIREMENTS.

REFER TO DRAWING 1080876 AND/OR 1080877 WHEN FIELD WORK IS REQUIRED FOR VARIABLE-WIDTH ROOF PANELS.

RP0038 W A R N I N G
PANELS WITH PROTECTIVE OIL COATING ARE SLIPPERY. PROCEED WITH CAUTION. WIPE CLEAN IF NECESSARY.

RP0046 PANEL CLIP FASTENERS
USE SCRUBOLT 097196 (GREEN 3/8 X 1) FOR PANEL CLIP-TO-PURLIN CONNECTIONS.

RP0054 DIRECTION OF ERECTION FOR MR-24 PANELS ON LEFT SLOPE IS FRONT TO REAR OF ROOF SURFACE.

RP0055 DIRECTION OF ERECTION FOR MR-24 PANELS ON RIGHT SLOPE IS REAR TO FRONT OF ROOF SURFACE.

RP0059 MR24 RIDGE COVER IS FURNISHED IN 20' LENGTHS. FIELD CUT THE RIDGE COVER TO LENGTH AS REQUIRED.

RP0062 ROOF PANELS MUST BE ATTACHED TO ALL ROOF STRUCTURALS TO INSURE THE STRUCTURAL INTEGRITY OF THE ROOF. THIS INCLUDES ALL PURLINS ADDED FOR SPECIFIC LOADING CONDITIONS, ETC.

ENOUGH PANEL-TO-STRUCTURAL FASTENERS, CLIPS (IF MR-24/CMR-24) HAVE BEEN FURNISHED FOR ALL ROOF STRUCTURALS.

RP0073 HOLE TO HOLE DIMENSION IN THE ROOF PANEL SCHEDULE IS NORMALLY THE DISTANCE BETWEEN THE STRUCTUAL ATTACHMENTS AT EACH END OF ROOF PANEL (SEE DWG 000001). THIS MAY NOT BE TRUE FOR CUSTOM PANEL CONDITIONS.

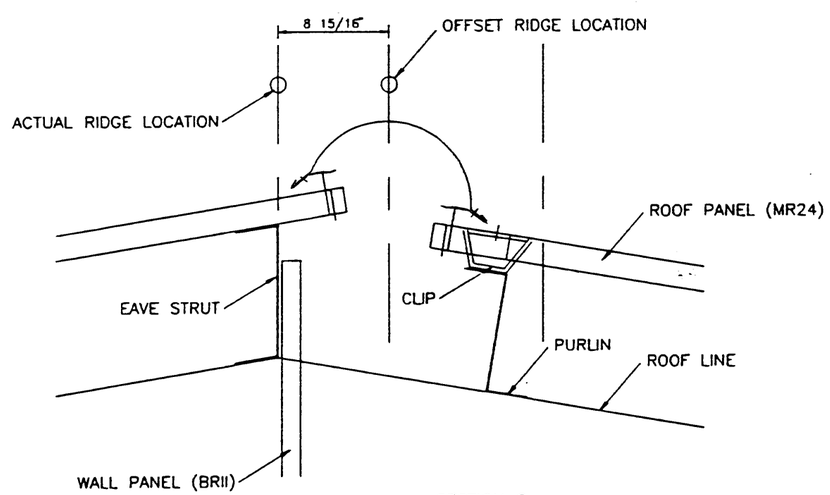

SECTION C

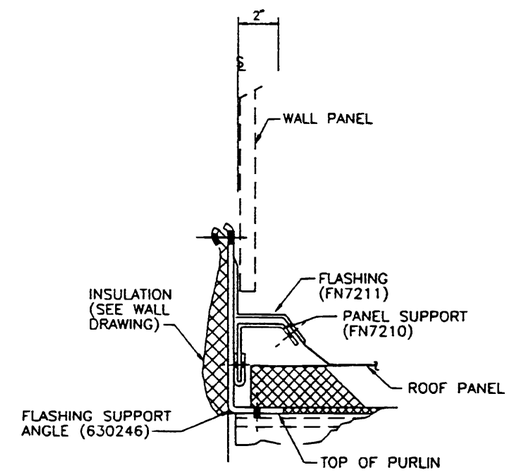

PANELED WALL

SECTIONS THRU TRANSITIONS

SECTION D

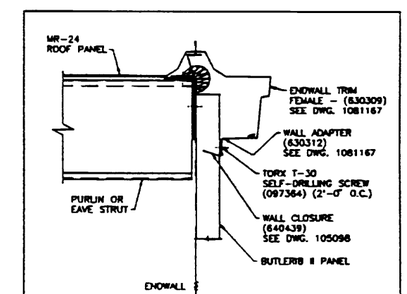

DETAIL KJ98 — GABLE TRIM RIGHT WITH MR-24 ROOF BUTLERIB II WALL PANEL W/CLOSURE (>1:12<-±12)

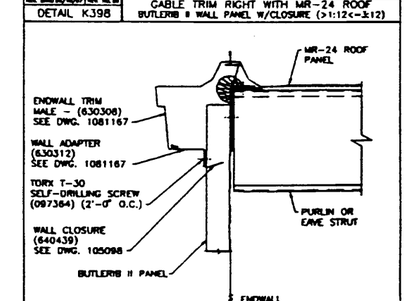

DETAIL KJ97 — GABLE TRIM LEFT WITH MR-24 ROOF BUTLERIB II WALL PANEL W/CLOSURE (>1:12<-±12)

BK

REVISION NO. 1	REVISION NO. 2		BUILDER:	PROJECT:	BUILDING ORDER DESCRIPTION:	DRAWING TITLE:	MLH	AG FILE NO:
DATE:	DATE:	BUTLER MANUFACTURING COMPANY, GENERAL OFFICES-KANSAS CITY, MISSOURI	STEELCRAFT CONST INC WOODINVILLE, WA	SONOBUOY STORAGE FAC OAK HARBOR, WA	18X35X12 LRF 25# Roof SL + 3#CLL 80 MPH EXP C UBC 94 SEISMIC ZONE 3	ROOF PANEL DRAWING	GROUP: V	DATE: 04/22/98
DRAWN BY:	DRAWN BY:	PRODUCT OF THE PRONTO ORDER ENGINEERING SYSTEM					DRAWING NUMBER: D97-030630-07	REV. 00
CHECKED BY:	CHECKED BY:							

USERNAME: C-Mon 04-27-1998 11:22:00 Y:\OA\0306307I

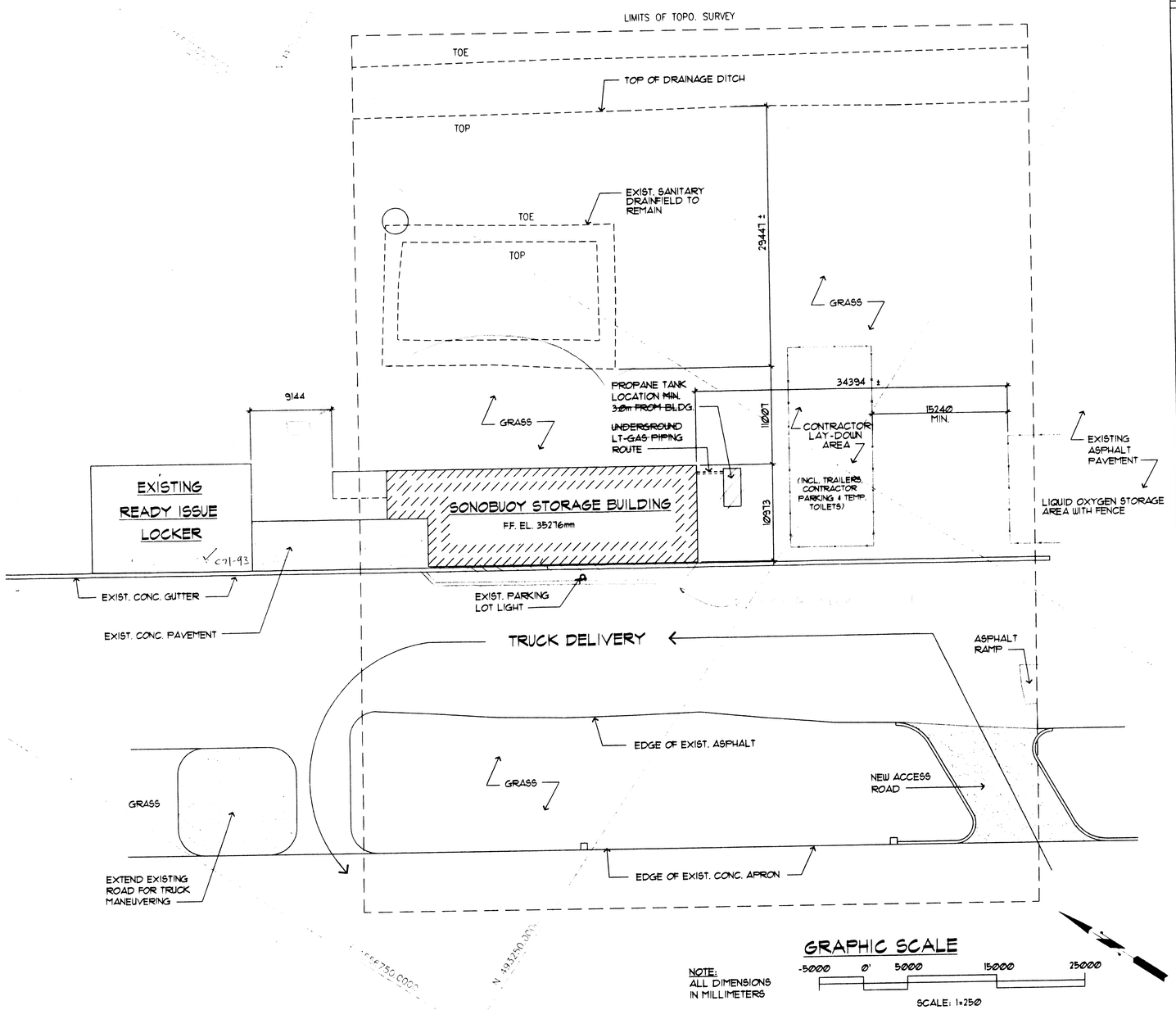

NOTE:
ALL DIMENSIONS IN MILLIMETERS

REVISIONS				
SYM	DESCRIPTION	PREP'D BY	DATE	APPROVED

ARCH. ABBREVIATIONS

ADJ.	ADJACENT
A.C.T.	ACOUSTICAL CEILING TILE
A.F.F.	ABOVE FINISH FLOOR
∠	ANGLE
APPROX.	APPROXIMATELY
BM.	BEAM
BLK'G.	BLOCKING
BOT.	BOTTOM
BLDG.	BUILDING
C.L., ℄	CENTER LINE
CLR.	CLEAR
C.M.U.	CONCRETE MASONRY UNIT
COL.	COLUMN
CONC.	CONCRETE
CONT.	CONTINUOUS
DEMO.	DEMOLITION
DET.	DETAIL
DIA., Ø	DIAMETER
DIM.	DIMENSION
DBL.	DOUBLE
D.S.	DOWNSPOUT
DWG., DWGS	DRAWINGS
EA.	EACH
ELECT., ELEC.	ELECTRICAL
EL., ELEV.	ELEVATION
EQ.	EQUAL
EQUIP	EQUIPMENT
EXIST.	EXISTING
F.O.S.	FACE OF STUD
F.F.	FINISH FLOOR
F.R.	FIRE RATED
FIN.	FINISH
GALV.	GALVANIZED
GA.	GAUGE
G.F.G.I.	GOVERNMENT FURNISHED GOVERNMENT INSTALLED
H.M.	HOLLOW METAL
HT.	HEIGHT
HR.	HOUR
INSUL.	INSULATION
MFR. MANUF	MANUFACTURER
MAX.	MAXIMUM
MECH.	MECHANICAL
MET., MTL.	METAL
MIN.	MINIMUM
N.I.C.	NOT IN CONTRACT
N.T.S.	NOT TO SCALE
O.C., o/c	ON CENTER
O.H.	OVERHEAD
OPN'G, OPEN'G	OPENING
OPP.	OPPOSITE
PREFIN.	PREFINISHED
P.	PAINT
±	PLUS OR MINUS
PLWD.	PLYWOOD
P.P.T.	PRESSURE PRESERVATIVE TREATED
REQ'D, REQ.	REQUIRED
R.O.	ROUGH OPENING
SHT.	SHEET
SIM.	SIMILAR
SQ., □	SQUARE
S.S.	STAINLESS STEEL
STL.	STEEL
STRUC., STRUCT.	STRUCTURAL
T & B	TOP AND BOTTOM
T.O.	TOP OF
TYP.	TYPICAL
U.N.O.	UNLESS NOTED OTHERWISE
V.C.T.	VINYL COMPOSITION TILE
V.T.R.	VENT THROUGH ROOF
VERT.	VERTICAL
WD.	WOOD

ARCHITECTURAL SYMBOLS

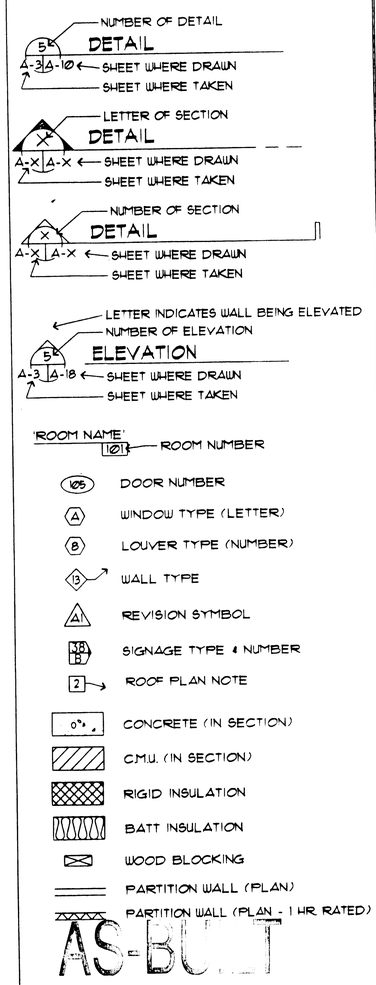

AS-BUILT

IF SHEET LESS THAN 914mm x 609mm
IT IS REDUCED PRINT
SCALE REDUCED ACCORDINGLY

DISCIPLINE - SHEET
A-1

A-E STAMP

CONCURRENCE DATE
TITLE:

A-E FIRM: CNU Architects, 120 Lakeside Avenue Suite 100, Seattle, Washington 98122, Telephone: 206 284 1400

DSGN. DR. RAH CHK.
SUPV. CH. ENGR.
SUBMITTED BY X. YUJONGLE YUCKERLOTI DATE 5/27/97
FRM MEMBER (TITLE)
E. I. C. FIRE PROT.
SEC. HD. DIV. HD.
SATISFACTORY TO DATE
TITLE:
APPROVED DATE
FTA NW FOR COMMANDER NAVFAC

DEPARTMENT OF THE NAVY NAVAL FACILITIES ENGINEERING COMMAND
ENGINEERING FIELD ACTIVITY, NORTHWEST
POULSBO, WASHINGTON

NAVAL AIR STATION WHIDBEY ISLAND OAK HARBOR, WASHINGTON
FY-97 BRAC PROJECT P-615T
SONOBUOY STORAGE FACILITY
NAVAL AIR STATION WHIDBEY ISLAND

DRAWING TITLE
SITE PLAN, ABBR.'S & SYM.'S

SIZE — CODE IDENT. NO. NAVFAC DRAWING NO. 8073538
CONST. CONTR. NO. N44255-94-C-7381
SCALE SPEC. 12-94-7381 SHEET 5 OF 9

CNU PROJECT P96006

CNU. SET LOG			
1	PHASE	PROPOSE / SUBMITTAL	
37	CONSUL.	CHECK SET	
		OWNER REVIEW	
		FINAL REVIEW	

Sonobuoy Storage Facility
N44255-94-C-7381
5 of 13

Building 250 Sonobuoy Storage

REVISIONS				
SYM	DESCRIPTION	PREP'D BY	DATE	APPROVED

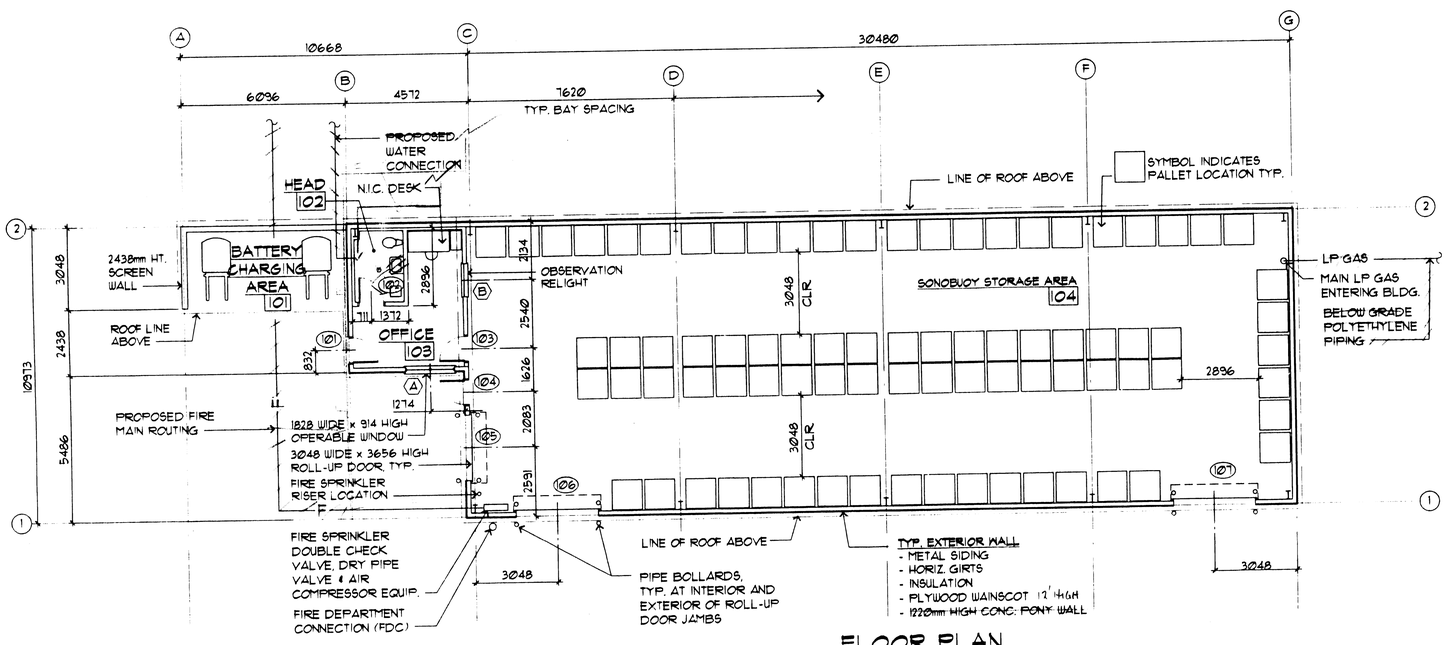

FLOOR PLAN

SCALE: 1:100

TRUE NORTH

PLAN NORTH

WINDOW TYPES:

SCALE: 1:50

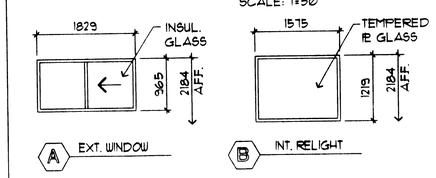

DOOR TYPES:

SCALE: 1:50

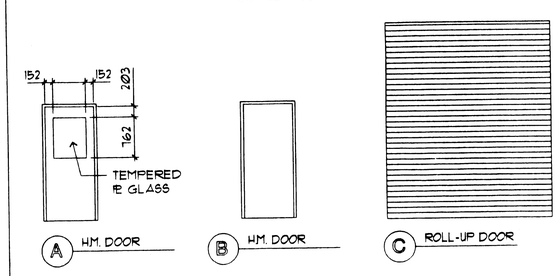

GENERAL FLOOR PLAN NOTES:

1. ALL DIMENSIONS TO FACE OF STUD, UNLESS NOTED OTHERWISE (U.N.O.)

DOOR SCHEDULE

NUMBER	DOOR FRAME	DOOR WIDTH	DOOR TYPE	DOOR MATERIAL	OPENING LOUVER	OPENING GLAZING	REMARKS
101	HM	914	A	HM	-	8mm TEMP	
102	HM	914	B	HM	-	-	
103	HM	914	A	HM	-	8mm TEMP	
104	HM	914	A	HM	-	8mm TEMP	
105	STL.	3048	C	STL.	-	-	ELECTRIC OPERATOR
106	STL.	3048	C	STL.	-	-	ELECTRIC OPERATOR
107	STL.	3048	C	STL.	-	-	ELECTRIC OPERATOR

DOOR NOTES

1. PAINT ALL SHOP-PRIMED HOLLOW METAL DOORS & FRAMES AND ACCESS DOORS

FINISH SCHEDULE

ROOM NAME	NUMBER	FLOOR	BASE north	BASE south	BASE west	BASE east	WAINSCOT north	WAINSCOT south	WAINSCOT west	WAINSCOT east	WAINSCOT height	WALLS north	WALLS south	WALLS west	WALLS east	CEILING height	CEILING mat'l	REMARKS
BATT. CHARGING AREA	101	CONC.	-	-	-	-	-	-	-	-	-	P	P	-	P	-	ES	
HEAD	102	VCT.	R	R	R	R	PL	PL	PL	PL	1220	P	P	P	P	2438	GYP.	
OFFICE	103	VCT.	R	R	R	R	-	-	-	-	-	P	P	P	P	2743	ACT.	
SONOBUOY STORAGE	104	CONC.	-	-	-	-	WD	WD	WD	WD	3656	P	P	P	P	-	ES	

FINISH SCHEDULE LEGEND

ACT	ACOUSTIC CEILING TILE	PL	PLASTIC LAMINATE
CONC.	CONCRETE	R	RUBBER BASE
ES	EXPOSED STEEL, SPECIAL COAT	VCT	VINYL COMPOSITION TILE
GYP	GYPSUM CEILING BOARD	WD	PLYWOOD
P	PAINT		

AS BUILT

IF SHEET LESS THAN 914mm x 609mm IT IS REDUCED PRINT SCALE REDUCED ACCORDINGLY

DISCIPLINE - SHEET: A-2

A-E STAMP

CONCURRENCE DATE

TITLE:

A-E FIRM: CNJU Architects, 120 Lakeside Avenue Suite 100, Seattle, Washington 98122, Telephone: 206 324 1400

DSGN | DR. RAH | CHK.

SUPV. | CH ENGR.

SUBMITTED BY: K. MICHAEL MICKERSON 5/28/97 DATE

FIRM MEMBER (TITLE)

E. I. C. | FIRE PROT.

SEC. HD. | DIV. HD.

SATISFACTORY TO DATE

TITLE:

APPROVED DATE

FFA NW FOR COMMANDER NAVFAC

DEPARTMENT OF THE NAVY NAVAL FACILITIES ENGINEERING COMMAND
ENGINEERING FIELD ACTIVITY, NORTHWEST
POULSBO, WASHINGTON

NAVAL AIR STATION WHIDBEY ISLAND OAK HARBOR, WASHINGTON
FY-97 BRAC PROJECT P-615T
SONOBUOY STORAGE FACILITY
NAVAL AIR STATION WHIDBEY ISLAND

DRAWING TITLE: FLOOR PLAN SCHEDULES

SIZE — | CODE IDENT. NO. | NAVFAC DRAWING NO. 8073539

CONST. CONTR. NO. N44255-94-C-7381

SCALE | SPEC. 12-94-7381 | SHEET 6 OF 9

CNJU PROJECT #96006

DWG. SET LOG			
DATE	PHASE	PROPOSE / SUBMITAL	
5/97	CONSOL.	CHECK SET	
		OWNER REVIEW	
		FINAL REVIEW	

Sonobuoy Storage Facility
N44255-94-C-7381
6 of 13

Building 2800 6 of 9
Sonobuoy Storage

REVISIONS				
SYM	DESCRIPTION	PREP'D BY	DATE	APPROVED

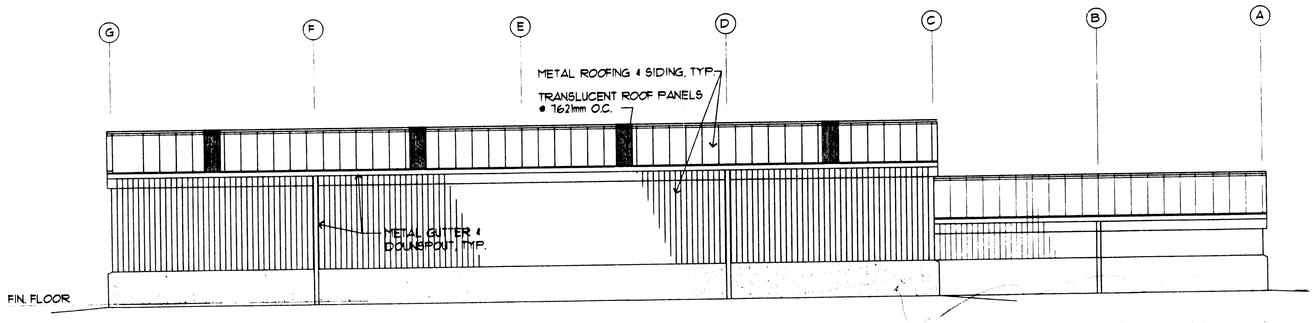

EAST ELEVATION

SCALE: 1=100

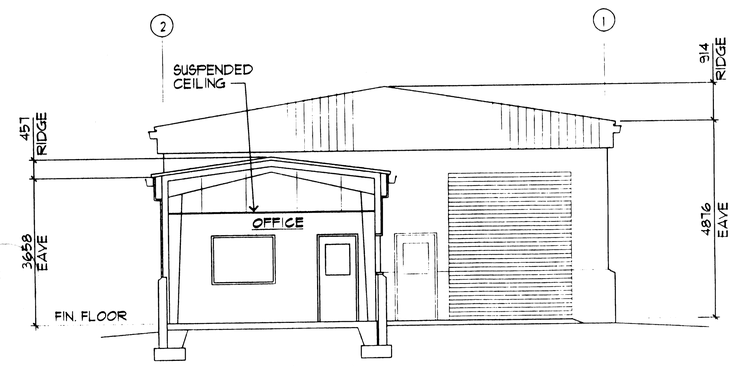

BUILDING SECTION (A-A)

SCALE: 1=75

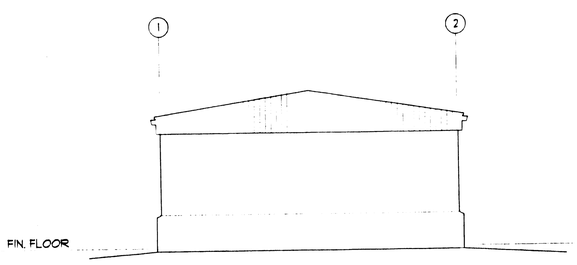

SOUTH ELEVATION

SCALE: 1=100

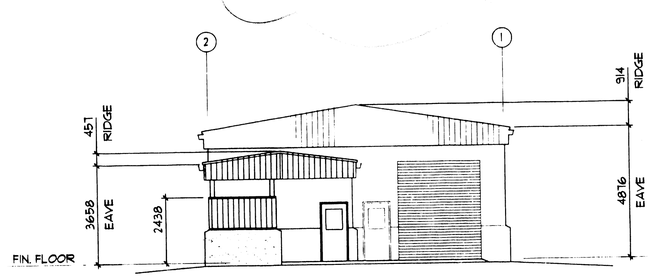

NORTH ELEVATION

SCALE: 1=100

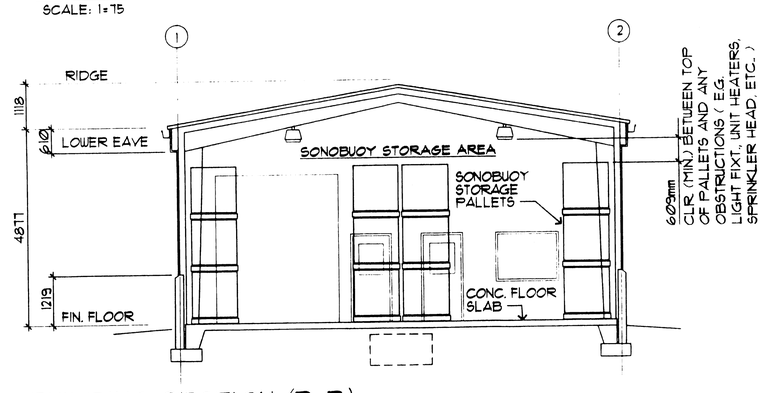

BUILDING SECTION (B-B)

SCALE: 1=75

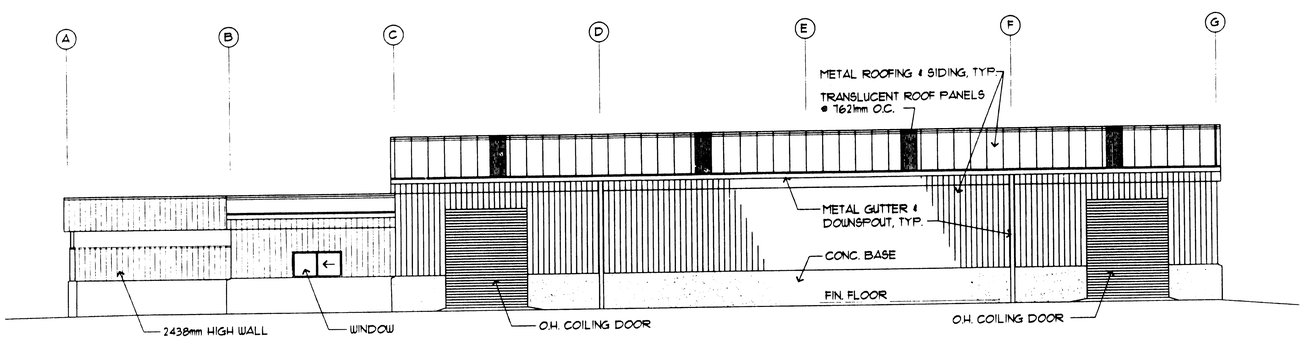

WEST ELEVATION

SCALE: 1=100

ACCEPT

IF SHEET LESS THAN 914mm x 609mm
IT IS REDUCED PRINT
SCALE REDUCED ACCORDINGLY

DISCIPLINE - SHEET: A-3

A-E STAMP

CONCURRENCE DATE

TITLE

A-E FIRM: ONJJ Architects, 120 Lakeside Avenue Suite 100, Seattle, Washington 98122, Telephone: 206 324 1400

DSGN: DR. RAH CHK.

SUPV. CH ENGR.

SUBMITTED BY: X. MICHAEL MICKELSON 5/28/97 DATE

FIRM MEMBER (TITLE)

E. I. C. FIRE PROT.

SEC. HD. DIV. HD.

SATISFACTORY TO DATE

TITLE:

APPROVED DATE

FTA NW FOR COMMANDER NAVFAC

DEPARTMENT OF THE NAVY NAVAL FACILITIES ENGINEERING COMMAND
ENGINEERING FIELD ACTIVITY, NORTHWEST
POULSBO, WASHINGTON

NAVAL AIR STATION WHIDBEY ISLAND OAK HARBOR, WASHINGTON
FY-97 BRAC PROJECT P-615T
SONOBUOY STORAGE FACILITY
NAVAL AIR STATION WHIDBEY ISLAND

DRAWING TITLE: BUILDING SECTIONS, ELEVATIONS

SIZE: — CODE IDENT.- NO. NAVFAC DRAWING NO. 8073540

SCALE

CONST. CONTR. NO. N44255-94-C-7381

SPEC 12-94-7381 SHEET 7 OF 9

Sonobuoy Storage Facility
N44255-94-C-7381
7 of 13

Building 2000 Sonobuoy Storage

DATE	PHASE	PROCESS / SUBMITTAL
5/28/97	CONSOL	FACILITY SET
		OWNER REVIEW
		FINAL REVIEW

CHALI PROJECT P96006

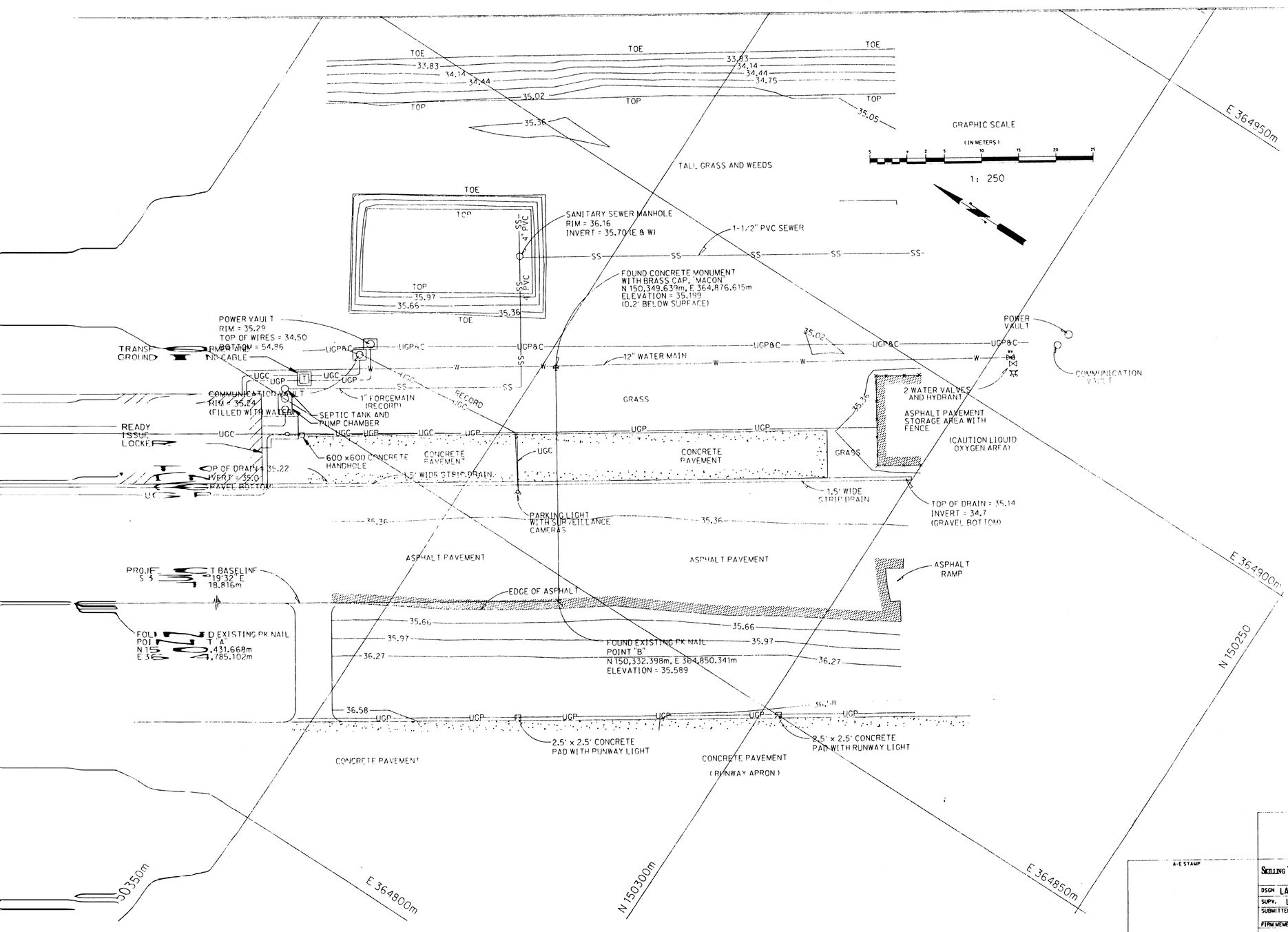

REVISIONS				
SYM	DESCRIPTION	PREP'D BY	DATE	APPROVED

AS BUILT

IF SHEET LESS THAN 914mm x 609mm
IT IS REDUCED PRINT
SCALE REDUCED ACCORDINGLY

DISCIPLINE — SHEET
C-1

A-E STAMP

CONCURRENCE DATE
TITLE:

A-E FIRM
SKILLING WARD MAGNUSSON BARKSHIRE INC.
Consulting Structural and Civil Engineers

DSGN LAO DR. GSV CHK. ---
SUPV. LAO CH ENGR.
SUBMITTED BY --- DATE -/-/97
FIRM MEMBER (TITLE)
E.I.C. FIRE PROT.
SEC. HD. DIV. HD.
SATISFACTORY TO DATE
TITLE:
APPROVED DATE
FOR COMMANDER NAVFAC

DEPARTMENT OF THE NAVY NAVAL FACILITIES ENGINEERING COMMAND
ENGINEERING FIELD ACTIVITY, NORTHWEST
POULSBO, WASHINGTON

NAVAL AIR STATION WHIDBEY ISLAND OAK HARBOR, WASHINGTON
FY-97 BRAC PROJECT P-615T
SONOBUOY STORAGE FACILITY
NAVAL AIR STATION WHIDBEY ISLAND

DRAWING TITLE
SITE SURVEY

SIZE — CODE IDENT. NO. NAVFAC DRAWING NO. 8073536
SCALE
CONST. CONTR. NO. N44255-94-C-7381
SPEC. 12-94-7381 SHEET 2 OF 9

Sonobuoy Storage Facility
N44255-94-C-7381
2 of 13

Building 2100 2 of 9 Sonobuoy Storage

1:\p615t\c_1.dgn Mon Jun 23 17:29:12 1997

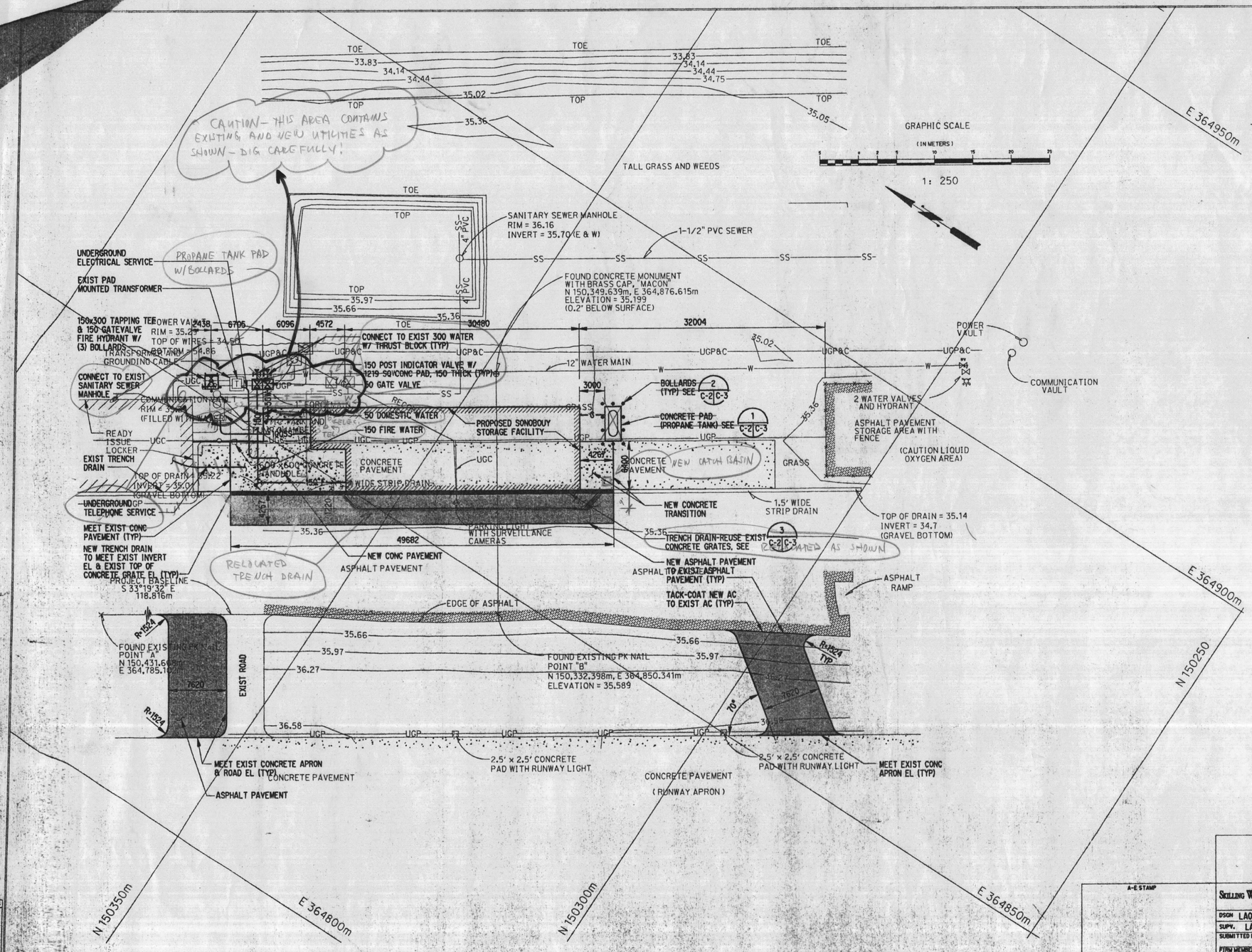

REVISIONS				
SYM	DESCRIPTION	PREP'D BY	DATE	APPROVED

GENERAL NOTES:

1. THE CONTRACTOR SHALL LIMIT THE MOVEMENT OF EQUIPMENT, MATERIAL, AND PERSONNEL TO THE WORK AREA. THE SONOBOUY STORAGE FACILITY LOCATED WITHIN THE FLIGHT LINE OF NAS WHIDBEY ISLAND. NAS WHIDBEY ISLAND IS AN OPERATIONAL NAVAL FACILITY UNDER CONTROLLED ACCESS. THE CONTRACTOR SHALL COORDINATE ALL ACCESS REQUIREMENTS WITH THE ROICC.
2. THE CONTRACTOR SHALL LIMIT THE EQUIPMENT, MATERIALS AND PERSONNEL TO THE SITE ONLY TO MINIMIZE THE POTENTIAL FOR FOD (FOREIGN OBJECT DEBRIS). THE CONTRACTOR SHALL KEEP THE PROJECT SITE CLEAN AND FREE OF FOD AT ALL TIMES.
3. THE SONOBOUY STORAGE FACILITY SHALL BE CONSTRUCTED IN ACCORDANCE WITH THE PROJECT REQUIREMENTS, PERFORMANCE SPECIFICATIONS, AND THE APPROVED CONTRACTOR DESIGN/BUILD DOCUMENTS.
4. THE EXISTING SITE PRELOAD HAS BEEN PLACED PRIOR TO CONSTRUCTION. THE CONTRACTOR SHALL EXCAVATE THE PRELOAD STRUCTURAL FILL AS REQUIRED. THE EXCAVATED PRELOAD STRUCTURAL FILL SHALL BE STOCKPILED AND COMPACTED AS DIRECTED BY THE ROICC. THE LOCATION OF THE STOCKPILE IS WITHIN NAS WHIDBEY ISLAND. ALL TOP SOIL AND ORGANIC MATERIAL EXCAVATED FROM THE PROJECT SITE SHALL BE DISPOSED OF OFF BASE AND OFF OF WHIDBEY ISLAND TO A PERMITTED CITY, COUNTY REGIONAL OR STATE FACILITY AUTHORIZED TO ACCEPT THE MATERIAL.
5. THE CONTRACTOR SHALL NOT START CONSTRUCTION ACTIVITIES UNTIL AUTHORIZED BY THE ROICC.
6. THE SUBGRADE SHALL BE PROOF ROLLED PRIOR TO STRUCTURAL FILL OF BASE COURSE PLACEMENT.
7. THE CONTRACTOR SHALL PLACE THE FILL MATERIALS IN ACCORDANCE WITH THE PROJECT DOCUMENTS.
8. THE CONTRACTORS SHALL DESIGN STORMWATER RUNOFF CONTROLS IN ACCORDANCE WITH THE WASHINGTON STATE DEPTARTMENT OF ECOLOGY'S SURFACE WATER MANAGEMENT MANUAL AND IN PLACE PRIOR TO COMMENCING CONSTRUCTION ACTIVITIES.
9. THE CONTRACTOR SHALL PROTECT ADJACENT PAVEMENT AND UTILITIES NOT TO BE DEMOLISHED. THE EXISTING UTILITIES SHALL REMAIN OPERATIONAL AT ALL TIMES. THE EXISTING PAVEMENTS SHALL REMAIN ACCESSIBLE AT ALL TIMES.
10. THE CONTRACTOR SHALL REMOVE THE TEMPORARY STORM DRAIN AND CATCH BASINS INSTALLED DURING THE PRELOAD FILL CONSTRUCTION. THE EXISTING CONDITIONS SHOWN DO NOT INDICATE ON THIS DRAWING THE PRELOAD FILL CONSTRUCTION WORK AND THE CONRTACTORS SHALL COORDINATE THIER WORK BASED UPON THE AS BUILT CONDITION OF THE PRELOAD SITE WORK.

AS BUILT

IF SHEET LESS THAN 914mm x 609mm
IT IS REDUCED PRINT
SCALE REDUCED ACCORDINGLY

DISCIPLINE - SHEET: C-2

A-E STAMP

CONCURRENCE DATE
TITLE:

A-E FIRM: SKILLING WARD MAGNUSSON BARKSHIRE INC. — Consulting Structural and Civil Engineers

DEPARTMENT OF THE NAVY — NAVAL FACILITIES ENGINEERING COMMAND
ENGINEERING FIELD ACTIVITY, NORTHWEST
POULSBO, WASHINGTON

DSGN LAO | DR. GSV | CHK. ---
SUPV. LAO | CH ENGR.
SUBMITTED BY --- | DATE -/-/97
FIRM MEMBER TITLED
E.I.C. | FIRE PROT.
SEC. HD. | DIV. HD.
SATISFACTORY TO | DATE
TITLE:
APPROVED | DATE
FFA NW FOR COMMANDER NAVFAC

NAVAL AIR STATION WHIDBEY ISLAND — OAK HARBOR, WASHINGTON
FY-97 BRAC PROJECT P-615T
SONOBUOY STORAGE FACILITY
NAVAL AIR STATION WHIDBEY ISLAND

DRAWING TITLE: SITE, PAVING AND DETAILS

SIZE — | CODE IDENT. NO. | NAVFAC DRAWING NO. 8073537
SCALE | CONST. CONTR. NO. N44255-94-C-7381
SPEC. 12-94-7381 | SHEET 3 OF 9

Sonobuoy Storage Facility
N44255-94-C-7381
3 of 13

Building 2800 3 of 9
Sonobuoy Storage

pl+ J:\p615t\c_2.dgn Mon Jun 23 17:30:15 1997

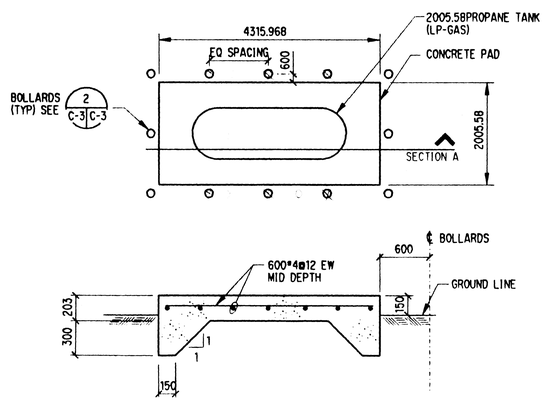

SECTION A

PROPANE TANK DETAIL (1 / C-2 C-3)

NTS

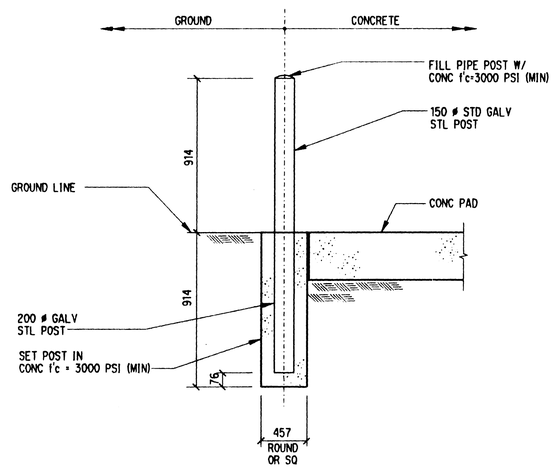

BOLLARD DETAIL (2 / C-2 C-3)

NTS

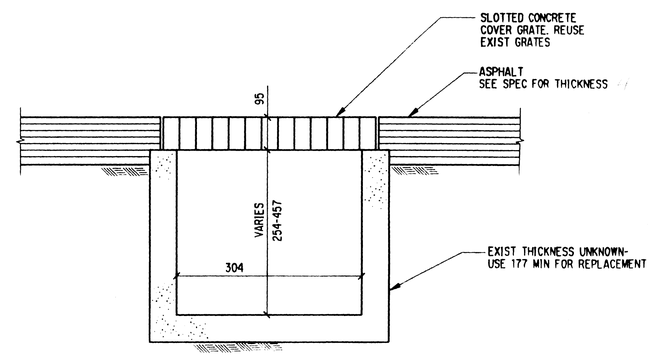

EXISTING CONCRETE GUTTER (3 / C-2 C-3)

NTS

REVISIONS

SYM	DESCRIPTION	PREP'D BY	CHK'D	APPR'D

AS BUILT

IF SHEET LESS THAN 914mm x 609mm
IT IS REDUCED PRINT
SCALE REDUCED ACCORDINGLY

DISCIPLINE SHEET: C–3

A-E STAMP

CONCURRENCE DATE

TITLE:

A-E FIRM: SKILLING WARD MAGNUSSON BARKSHIRE INC. Consulting Structural and Civil Engineers

DSGN LAO DR. GSV CHK. ---
SUPV. LAO CH ENGR.
SUBMITTED BY --- DATE -/-/97
FIRM MEMBER (TITLE)
E.I.C. FIRE PROT.
SEC. NO. DIV. NO.
SATISFACTORY TO DATE
TITLE:
APPROVED DATE
FFA NW FOR COMMANDER NAVFAC

DEPARTMENT OF THE NAVY NAVAL FACILITIES ENGINEERING COMMAND
ENGINEERING FIELD ACTIVITY, NORTHWEST
POULSBO, WASHINGTON

NAVAL AIR STATION WHIDBEY ISLAND OAK HARBOR WASHINGTON
FY-97 BRAC PROJECT P-615T
SONOBUOY STORAGE FACILITY
NAVAL AIR STATION WHIDBEY ISLAND

DRAWING TITLE
GRADING, UTILITIES AND DETAIL PLAN

SIZE – CODE IDENT. NO. NAVFAC DRAWING NO. 8073646
SCALE CONST. CONTR. NO. N44255-94-C-7381
SPEC. 12-94-7381 SHEET 4 OF 9

DWG.	SET	LOC
TYP. PHASE	PROGRESS / SUBMITTAL	
12/6/97	CONSUL. CHECK SET	
	OWNER REVIEW	
	FINAL REVIEW	

Sonobuoy Storage Facility
N44255-94-C-7381
4 of 13

Building 2402 Sonobuoy Storage

plt J:\p615t\c_3.dgn Mon Jun 23 17:41:44 1997

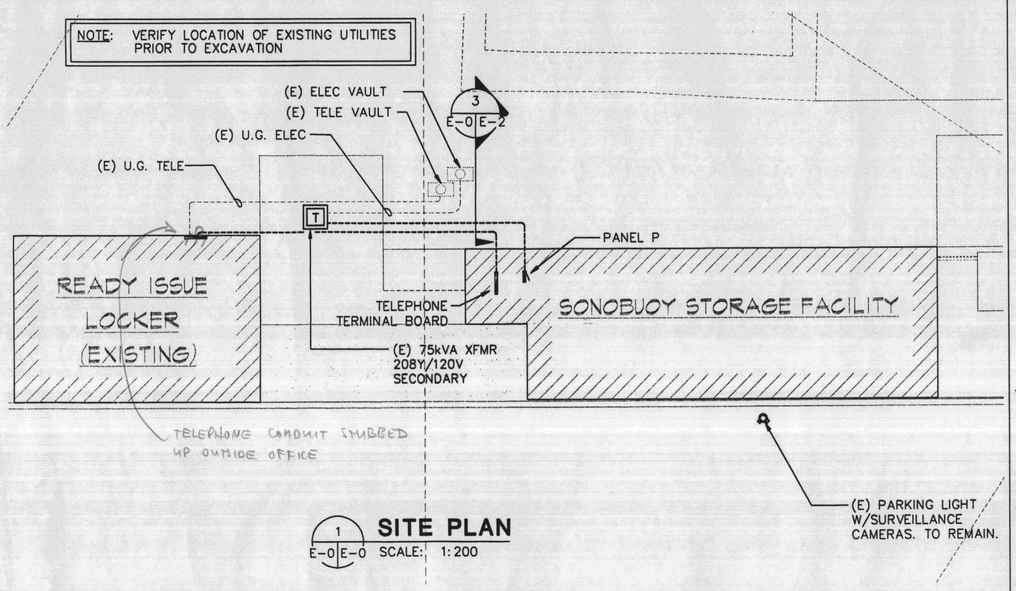

1 E-0 E-0 **SITE PLAN**
SCALE: 1:200

RECEPTACLES

- DUPLEX RECEPTACLE 120V, SINGLE PHASE
- DUPLEX RECEPTACLE 120V, SINGLE PHASE, MOUNTED 3" ABOVE COUNTER BACKSPLASH
- RECEPTACLE, 3 PHASE
- GFI DUPLEX RECEPTACLE – GROUND FAULT CIRCUIT INTERRUPTER TYPE

LIGHTING

- FLUORESCENT FIXTURE, DRAWN TO SCALE ON PLANS–
- EXIT SIGN – DIRECTIONAL ARROWS AS INDICATED, SHADED SIDES ILLUMINATED
- X LIGHT FIXTURE TYPE – SEE FIXTURE SCHEDULE
- $ SWITCH – SINGLE POLE SUBSCRIPTS a,b, etc., DENOTES CIRCUIT CONTROLLED
- $3 3 WAY SWITCH
- $M MOTOR RATED SWITCH

EQUIPMENT

- PANEL – 208 VOLT SYSTEM
- MOTOR CONNECTION

CONTROL

- DISCONNECT SWITCH
- TC TIME CLOCK
- CONTACTOR
- PC PHOTO CONTROL
- DOOR PUSH BUTTON CONTROL

CIRCUITS

- RACEWAY CONCEALED IN CEILING OR WALL. HASH MARKS INDICATE NUMBER OF WIRES. #12 AWG WIRE UNLESS OTHERWISE NOTED. TWO WIRES IF NO HASH MARK SHOWN. LONG HASH MARK DENOTES NEUTRAL. PROVIDE GROUND CONDUCTOR.
- RACEWAY UNDERGROUND
- RACEWAY STUB-OUT WITH BUSHING
- HOME RUN TO PANEL OR LOCATION NOTED
- CIRCUIT CONTINUATION
- J JUNCTION BOX

ELECTRICAL RISER

- X/Y CIRCUIT BREAKER — X DENOTES TRIP RATING, Y DENOTES NUMBER OF POLES
- GROUND CONNECTION

REVISIONS				
SYM	DESCRIPTION	PREP'D BY	DATE	APPROVED

GENERAL NOTES

1. THE LOCATIONS SHOWN FOR EXISTING UTILITIES IS APPROXIMATE. VERIFY LOCATIONS OF EXISTING TRANSFORMER, MANHOLE, ETC. PRIOR TO WORK IN THIS AREA.

WORK DEFINITION

- FLAG NOTE
- REVISION SYMBOL
- ED ELECTRICAL DETAIL SYMBOL
  - DETAIL SHOWN
  - DETAIL TAKEN

ABBREVIATIONS

A, AMP	AMPERE	R	RACEWAY
AWG	AMERICAN WIRE GAGE	RECEPT	RECEPTACLE
CB	CIRCUIT BREAKER	TELE	TELEPHONE
C	COMM	TYP	TYPICAL
G, GND	GROUND	V	VOLT
GFI, GFCI	GROUND FAULT CIRCUIT INTERRUPTER	W	WIRE OR WATT
HP	HORSEPOWER	WP	WEATHERPROOF
J-BOX	JUNCTION BOX	XFMR	TRANSFORMER
N	NEUTRAL	Ø	PHASE
PNL	PANEL		

OUTLET MOUNTING HEIGHTS

SPECIAL OUTLET HEIGHTS ARE SHOWN ON THE ELECTRICAL DRAWINGS OR ON THE ARCHITECTURAL DRAWINGS. IF SPECIAL OUTLET HEIGHTS ARE NOT SHOWN OR REQUIRED, THEN LOCATE OUTLETS AS NOTED BELOW. OUTLET HEIGHTS ARE MEASURED FROM THE FINISHED FLOOR TO THE CENTERLINE OF THE OUTLET UNLESS OTHERWISE NOTED.

RECEPTACLES	+ 18 INCHES VERTICAL
LIGHT SWITCHES	+ 4 FEET SET VERTICAL
PANELBOARDS	+ 6 FEET TO TOP OF PANELBOARD
DOOR PUSH BUTTONS	+ 4 FEET SET VERTICAL

SYMBOLS & ABBREVIATIONS

AS-BUILT

IF SHEET LESS THAN 914mm x 609mm IT IS REDUCED PRINT SCALE REDUCED ACCORDINGLY

DISCIPLINE - SHEET **E-0**

A-E STAMP: ROBERT B. SPARLING, STATE OF WASHINGTON, 18452, REGISTERED PROFESSIONAL ENGINEER — EXPIRES 11-19-99

CONCURRENCE DATE
TITLE:

SPARLING Sequoyah, Corp. A-E FIRM

DSGN | DR. | CHK.
SUPV. | CH ENGR.
SUBMITTED BY DATE
FRM MGRMR (WILD)
E. I. C. | FIRE PROT.
SEC. HD. | DIV. HD.
SATISFACTORY TO DATE
TITLE:
APPROVED DATE
FFA NW FOR COMMANDER NAVFAC

DEPARTMENT OF THE NAVY NAVAL FACILITIES ENGINEERING COMMAND
ENGINEERING FIELD ACTIVITY, NORTHWEST
POULSBO, WASHINGTON

NAVAL AIR STATION WHIDBEY ISLAND OAK HARBOR, WASHINGTON
FY-97 BRAC PROJECT P-615T
SONOBUOY STORAGE FACILITY
NAVAL AIR STATION WHIDBEY ISLAND

DRAWING TITLE: SITE PLAN–SYM/ABBR

SIZE – | CODE IDENT. NO. | NAVFAC DRAWING NO.
SCALE AS NOTED | CONST. CONTR. NO. N44255-C-7381
SPEC. 12947381 | SHEETX OF

DWG. SET LOG			
DATE	PHASE	PROPOSE / SUBMITTAL	
5/28/97	CONSTR.	CONTR. SUBM.	
		OWNER REVIEW	
		FINAL REVIEW	

CALM PROJECT P96008

s:\7541\CADD\E0.DWG
Jan 19, 1998 - 09:36:46

Sonobuoy Storage Facility
N44255-94-C-7381
10 of 13

Building 2800 Sonobuoy Storage
Discipline E-0

REVISIONS				
SYM	DESCRIPTION	PREP'D BY	DATE	APPROVED

GENERAL NOTES:

1. BOTTOM OF TYPE 'HP1' FIXTURES SHALL BE 609mm MIN. CLEARANCE ABOVE SONOBOUY PALLETS.
2. SEE FIRE PROTECTION DRAWINGS FOR REQUIRED DETECTION DEVICES AND LOCATIONS.
3. SEE 'LIGHTING FIXTURE SCHEDULE, SHEET 'E-2' FOR FIXTURE TYPES.

FLAG NOTES:

1. PROVIDE RECEPTACLE FOR BATTERY CHARGER
2. PROVIDE EQUIPMENT CONNECTION TO INSTA-HOT LOCATED UNDER SINK.
3. PROVIDE (2) DUPLEX RECEPTACLES ON TTB AS SHOWN.
4. BASEBOARD HEATER WITH INTEGRAL THERMOSTAT. 1.0 kW, 120V, 1ø
5. BASEBOARD HEATER WITH INTEGRAL THERMOSTAT. 1.5 kW, 120V, 1ø

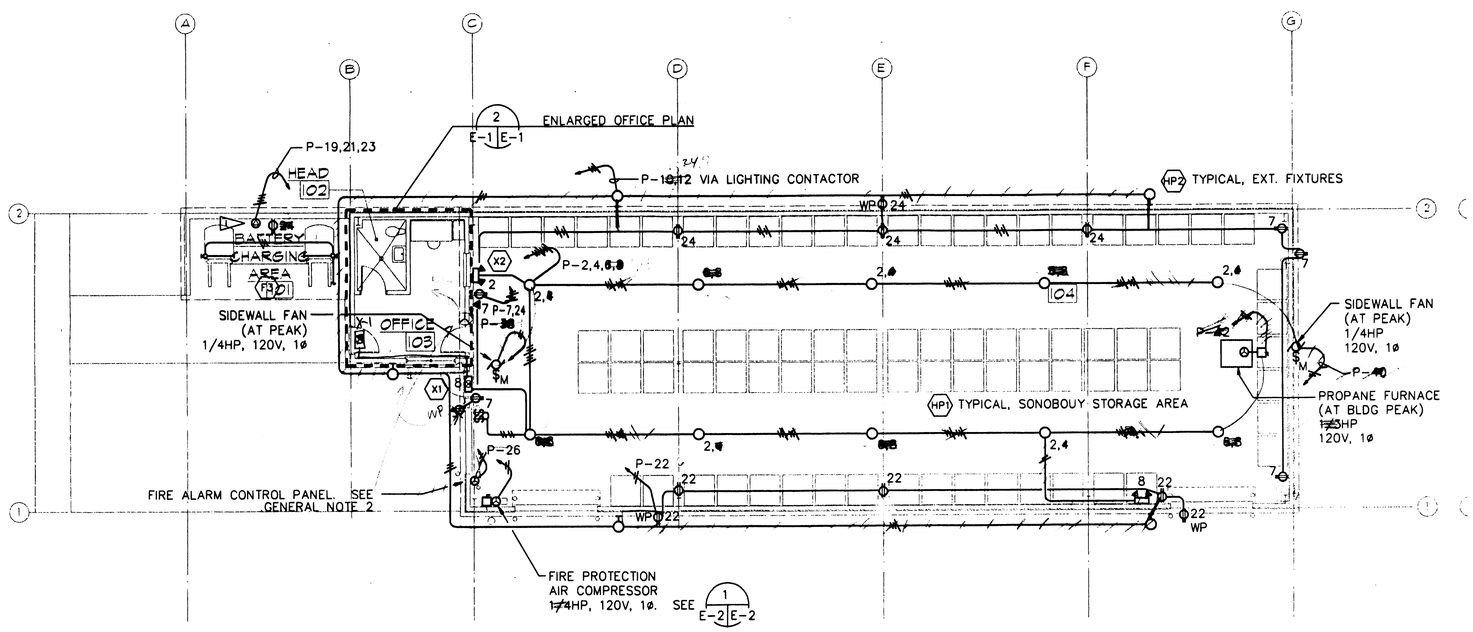

POWER & LIGHTING PLAN

SCALE: 1:100

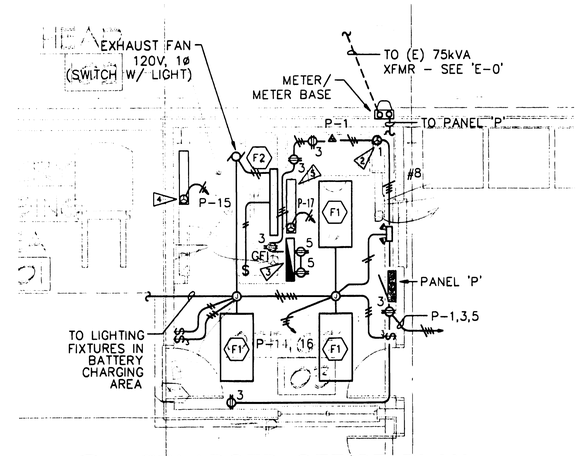

ENLARGED OFFICE PLAN

SCALE: 1:50

AS BUILT

IF SHEET LESS THAN 914mm x 609mm
IT IS REDUCED PRINT
SCALE REDUCED ACCORDINGLY

DISCIPLINE - SHEET **E-1**

A-E STAMP: ROBERT B. SPARLING, STATE OF WASHINGTON, 16453, REGISTERED PROFESSIONAL ENGINEER, EXPIRES 11-19-99

SPARLING Sequoyah, Corp. — A-E FIRM

DEPARTMENT OF THE NAVY NAVAL FACILITIES ENGINEERING COMMAND
ENGINEERING FIELD ACTIVITY, NORTHWEST
POULSBO, WASHINGTON

NAVAL AIR STATION WHIDBEY ISLAND OAK HARBOR, WASHINGTON
FY-97 BRAC PROJECT P-815T
SONOBUOY STORAGE FACILITY
NAVAL AIR STATION WHIDBEY ISLAND

DRAWING TITLE: POWER & LIGHTING PLAN

SIZE: — | CODE IDENT. NO. | NAVFAC DRAWING NO.
CONST. CONTR. NO. N44255-C-7381
SCALE: AS NOTED | SPEC. 12947381 | SHEET X OF

DSGN | DR. | CHK. | SUPV. | CH ENGR. | SUBMITTED BY | DATE | FRU MEMBER (TITLE) | E. I. C. | FIRE PROT. | SEC. HD. | DIV. HD. | SATISFACTORY TO | DATE | TITLE: | APPROVED | DATE | FFA NW FOR COMMANDER NAVFAC

CONCURRENCE | DATE | TITLE:

CHAU PROJECT #98005

DATE	PURPOSE / REVISION	CHKD. BY	CHG. NOT. LOG
12/29/97	ORIGINAL		

FILE NAME: J:\7541\CADD\E1.DWG
Jan 19, 1998 - 09:37:06

Sonobuoy Storage Facility
N44255-94-C-7381
11 of 13

Building 2490 Dwg. No. E-1
Sonobuoy Storage

REVISIONS				
SYM	DESCRIPTION	PREP'D BY	DATE	APPROVED

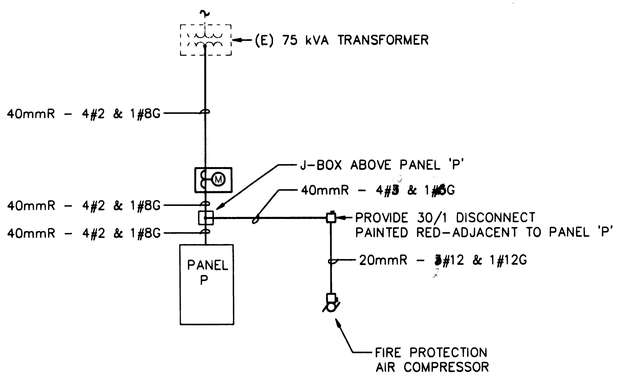

1 ONE-LINE DIAGRAM
E-2 | E-2 SCALE: NONE

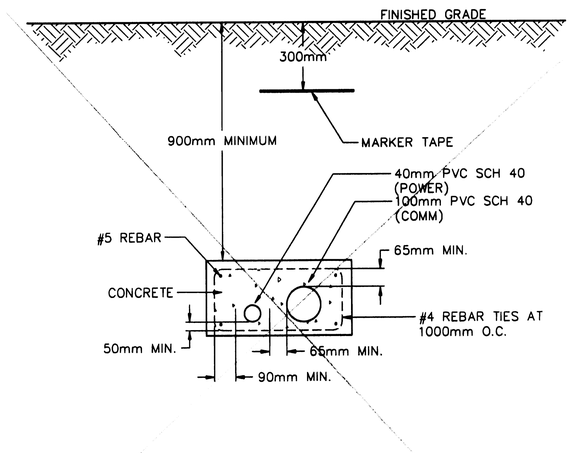

3 DUCT BANK DETAIL
E-0 | E-2 SCALE: NOT TO SCALE

LIGHTING FIXTURE SCHEDULE

FIXTURE ID	DESCRIPTION
F1	600mm X 1200mm LAY–IN, 3 LAMP 0.38 CM MINIMUM THICK ACRYLIC PRISMATIC LENSED FLUORESCENT FIXTURE. 38KT8 LAMPS. PF>.95, THD<12% BF 0.85–1.0
F2	WALL–MOUNTED DIRECT–INDIRECT FIXTURE. .038 CM MINIMUM THICK ACRYLIC PRISMATIC LENSED FLUORESCENT FIXTURE. 38KT8 LAMPS, PF>.95, THD<12%, BF 0.85–1.0
F3	2400mm INDUSTRIAL FLUORESCENT FIXTURE. DIE FORMED COLD ROLLED STEEL WHITE ENAMEL OR POLYESTER FINISH. SUITABLE FOR OUTDOOR LOCATIONS. (2) 38K FLUORESCENT LAMPS
HP1	HIGH INTENSITY DISCHARGE 250W LOW BAY INDUSTRIAL FIXTURES WITH PRISMATIC GLASS REFRACTORS. FIXTURES SHALL BE MOUNTED ON HOOK,CORD AND POWER HOOK ASSEMBLY.
HP2	HIGH PRESSURE SODIUM, 70W EXTERNAL WALL MOUNTED FIXTURE. SUITABLE FOR WET LOCATIONS.
X1	EXIT SIGN. 2 LONG LIFE INCANDESCENT LAMP. ALUMINIUM OR PAINTED STEEL HOUSING AND STENCIL FACE.
X2	EMERGENCY LIGHTING UNIT. SEALED BATTERY FULLY ADJUSTABLE HEADS. AUTOMATIC OVERLOAD PROTECTION – FUSE OR CIRCUIT BREAKER.

5 LIGHTING FIXTURE SCHEDULE
E-2 | E-2 SCALE: NONE

PANEL "P" CIRCUIT DIRECTORY

1	INSTA HOT 20A	2	LIGHTING- STORAGE 20A
3	GEN RECPT- OFFICE 20A	4	LIGHTING- STORAGE 20A
5	GEN RECPT-TTB 20A	6	LIGHTING- EXTERNAL 20A
7	GEN RECPT- STORAGE 20A	8	GEN RECPT- BATTERY 20A
9	MECH SIDEWALL FANS 15A	10	LIGHTING CONTACT 20A
11		12	FIRE ALARM CONTROL PANEL 20A
13	MECH- PROPANE FURN 20A	14	LIGHTING BATH/BATTERY 20A
15	WALL HTR- BATHROOM 20A	16	LIGHTING OFFICE 20A
17	WALL HTR- OFFICE 20A	18	
19	BATTERY CHARGER 30/3	20	
21		22	GEN RECPT- STORAGE 20A
23		24	GEN RECPT-STORAGE 20A
25		26	
27		28	
29		30	
31		32	
33		34	
35		36	
37		38	
39		40	
41		42	

114B361HO1

2 PANEL SCHEDULE
E-2 | E-2 SCALE: NONE

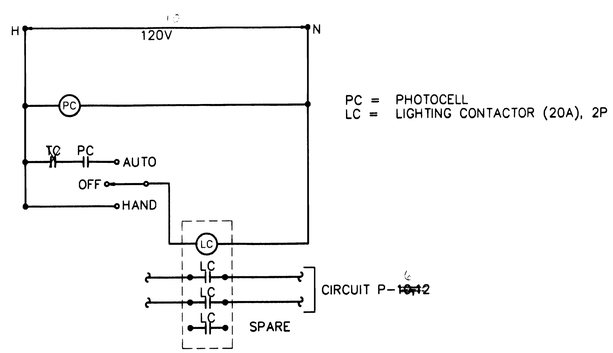

4 LIGHTING CONTROL DIAGRAM
E-2 | E-2 SCALE: NONE

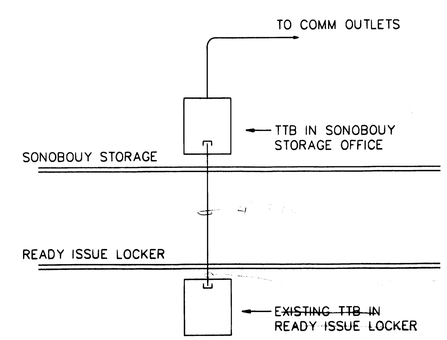

6 COMM RISER DIAGRAM
E-2 | E-2 SCALE: NONE

AS-BUILT

IF SHEET LESS THAN 914mm x 609mm
IT IS REDUCED PRINT
SCALE REDUCED ACCORDINGLY

DISCIPLINE - SHEET
E-2

A-E STAMP: ROBERT B. SPARLING, STATE OF WASHINGTON, 18452, REGISTERED PROFESSIONAL ENGINEER
EXPIRES 11-19-99

A-E FIRM: SPARLING Sequoyah, Corp.

DEPARTMENT OF THE NAVY NAVAL FACILITIES ENGINEERING COMMAND
ENGINEERING FIELD ACTIVITY, NORTHWEST
POULSBO, WASHINGTON

NAVAL AIR STATION WHIDBEY ISLAND OAK HARBOR, WASHINGTON
FY-97 BRAC PROJECT P-615T
SONOBUOY STORAGE FACILITY
NAVAL AIR STATION WHIDBEY ISLAND

DRAWING TITLE: ONE-LINE DIA./DETAILS

DSGN | DR. | CHK. | SUPV. | CH ENGR. | SUBMITTED BY | DATE | FIRM NUMBER (TRUE) | E. I. C. | FIRE PROT. | SEC. HD. | DIV. HD. | SATISFACTORY TO | DATE | TITLE: | APPROVED | DATE | FFA MIF FOR COMMANDER NAVFAC | CONCURRENCE | DATE | TITLE:

SIZE – | CODE IDENT. NO. | NAVFAC DRAWING NO.
CONST. CONTR. NO. N44255-C-7381
SCALE AS NOTED | SPEC. 12947381 | SHEET OF

FILE NAME: J:\7541\CADD\E2.DWG
Jan 19, 1998 - 09:37:25

Sonobuoy Storage Facility
N44255-94-C-7381
12 of 13

Bailey 2F20 Dayton E-2
Sonobuoy Storage

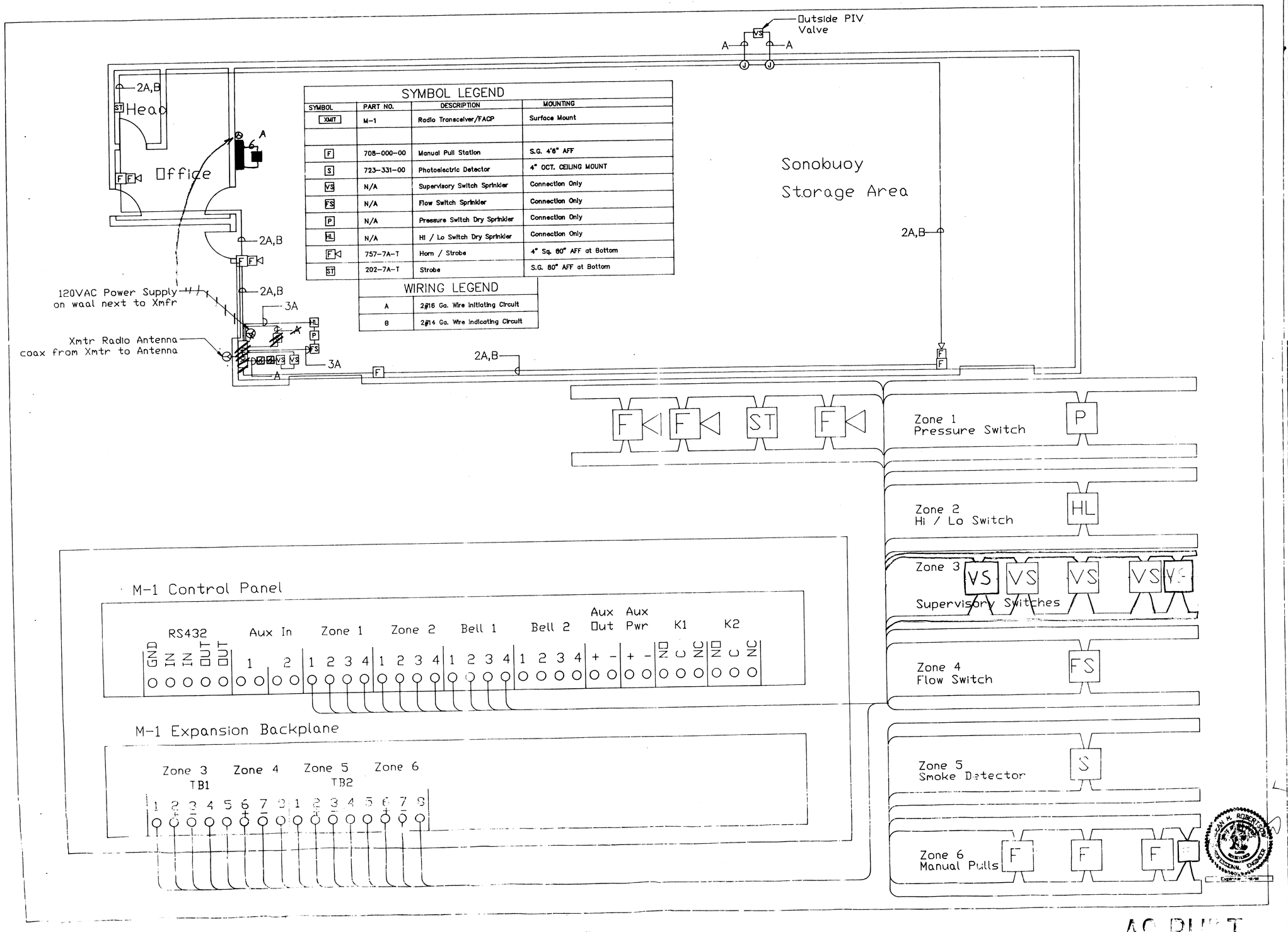

SYMBOL LEGEND			
SYMBOL	PART NO.	DESCRIPTION	MOUNTING
XMIT	M-1	Radio Transceiver/FACP	Surface Mount
F	708-000-00	Manual Pull Station	S.G. 4'6" AFF
S	723-331-00	Photoelectric Detector	4" OCT. CEILING MOUNT
VS	N/A	Supervisory Switch Sprinkler	Connection Only
FS	N/A	Flow Switch Sprinkler	Connection Only
P	N/A	Pressure Switch Dry Sprinkler	Connection Only
HL	N/A	Hi / Lo Switch Dry Sprinkler	Connection Only
F	757-7A-T	Horn / Strobe	4" Sq. 80" AFF at Bottom
ST	202-7A-T	Strobe	S.G. 80" AFF at Bottom

WIRING LEGEND	
A	2#16 Ga. Wire Initiating Circuit
B	2#14 Ga. Wire Indicating Circuit

NO.	DATE	REVISION	BY
1	11-5-97	Submission Set	JMP
2	3-20-98	Dept of Navy Review	JMP
3			
4			
5			
6			
7			

PROJECT NAME: Sonobouy Storage

SHEET TITLE: Fire Alarm System Equipment Layout

Electronic Systems Corporation
P.O. Box 77064
Seattle, WA 98177
(206) 361-6553
Fax: (206) 361-6574

SCALE: 1/8"=1'-0"
DATE: 11-5-97
DRAWN: JMP
CHECKED: JMP
APPVD BY: JMP
JOB NO.: 97144

SHEET: FA-1 1/1

Fire Alarm System
1997
1 of 1

Building 2000 Fire Alarm System
Sonobuoy Storage

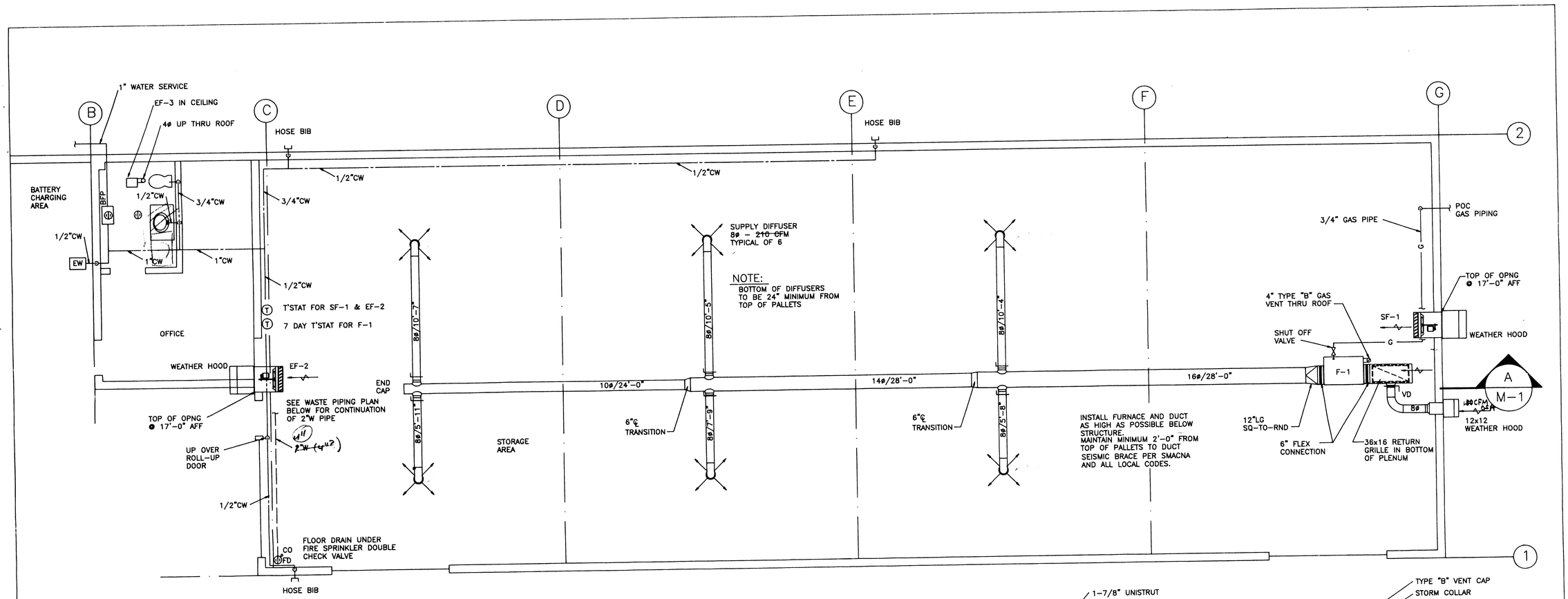

HVAC - PLUMBING FLOOR PLAN

1/4"

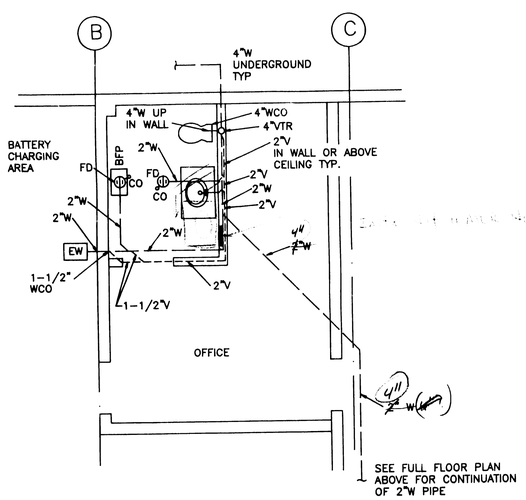

DWV PIPING FLOOR PLAN

1/4"

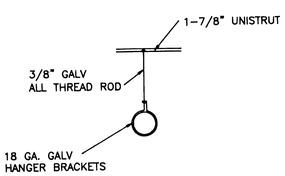

DUCT HANGER DETAIL

1/4"

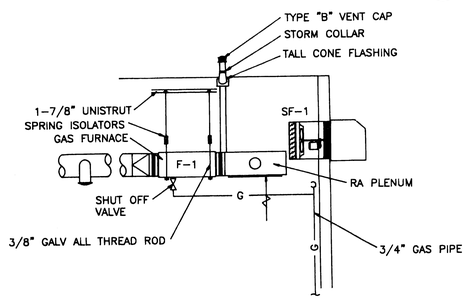

SECTION A

1/4"

NOTE:

1. HOT WATER HEATER IS INSTANTANEOUS, LOCATED UNDER FIXTURE.
2. CW/HW TO BE INSULATED WHEN NOT IN CONDITIONED SPACE.
3. FLOOR DRAINS TO HAVE TRAP PRIMERS (1/2" CW)

LEGEND:

CW – COLD WATER
HW – HOT WATER
EW – EYE WASH
WC – WATER CLOSET
LAV – LAVATORY SINK
BFP – BACK FLOW PREVENTER
V – VENT
VTR – VENT THRU ROOF
W – WASTE
CO – FLOOR CLEAN OUT
WCO – WALL CLEAN OUT
FD – FLOOR DRAIN

EQUIPMENT SCHEDULE	
F-1	GAS FIRED FURNACE: AMERICAN STANDARD ~~ADD100C945~~, ~~100,000~~ BTUH INPUT, ~~80,000~~ BTUH OUTPUT ~~1250~~ CFM, 115/1/60, 145 LBS. 1/3 HP C.I.P.S.P ~~130~~ CFM OSA
SF-1	SUPPLY FAN: GREENHECK SBS-1H20-4, 1/4 HP, 115/1/60, 1725 RPM, 60 LBS, WALL MOUNT HOUSING KIT, WEATHERHOOD, ~~1812~~ CFM
EF-2	EXHAUST FAN: GREENHECK SBE-1H20-4, 1/4 HP, 115/1/60, 1725 RPM, 60 LBS, WALL MOUNT HOUSING KIT, WEATHERHOOD, ~~1812~~ CFM
EF-3	TOILET EXHAUST FAN: NUTONE QT130, 130 CFM, 1.0 SONES, 115/1/60

AS BUILT

FY-97 BRAC PROJECT P-615T
SONOBUOY STORAGE FACILITY
NAVAL AIR STATION WHIDBEY ISLAND
CONST. CONTR. NO. N44255-94-C-7381

MECHANICAL PLAN

DATE: 12-16-97	DRAWN BY: MIKE H.	DWG NO. M-1
SCALE: 1/4"=1'-0"	JOB NO.:	

Sonobuoy Storage Facility
N44255-94-C-7381
13 of 13

Building 200 Sonobuoy Storage

M-1

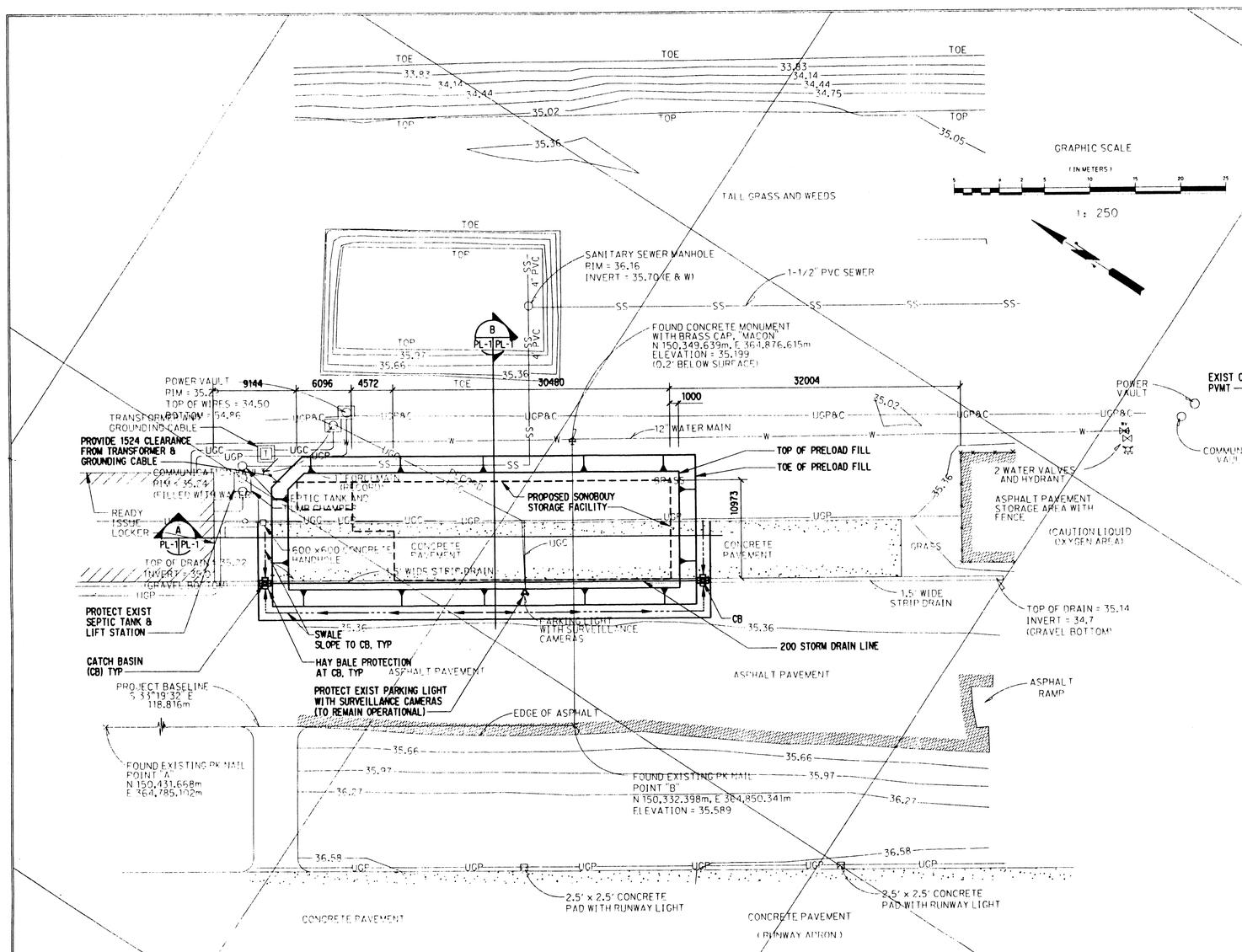

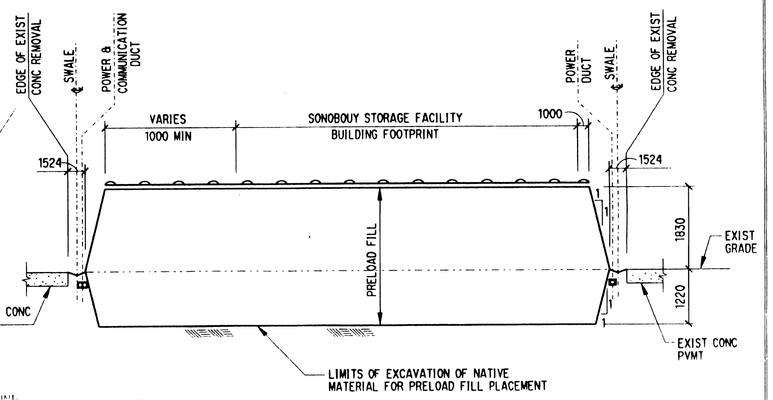

SECTION A (PL-1 | PL-1)

NTS

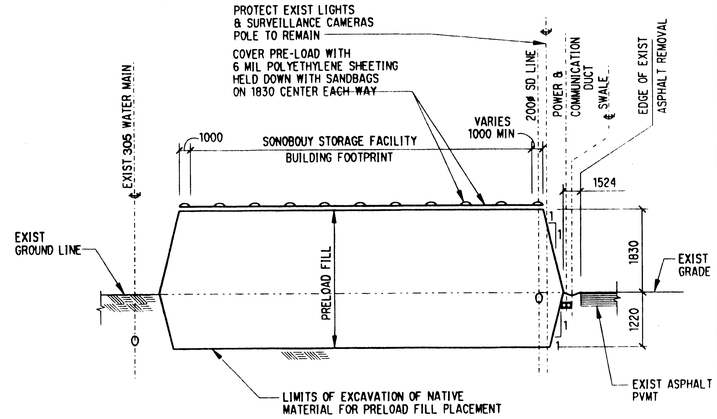

SECTION B (PL-1 | PL-1)

NTS

AS BUILT

Environmental Sat-To:	W.I. Enviro. Aff. Off., K.A. Souders, 7-1-97
Functional Sat-To:	W.I. Weapons, Chief R.A. Deniz, 7-2-97
ROICC Sat-To:	K.A. McAteer, 6-26-97

IF SHEET LESS THAN 914mm x 609mm
IT IS REDUCED PRINT
SCALE REDUCED ACCORDINGLY

DISCIPLINE: PL-1

A-E STAMP: JACK L. GUIDE, STATE OF WASHINGTON, REGISTERED PROFESSIONAL ENGINEER — EXPIRES 08/09/97

A-E FIRM: SKILLING WARD MAGNUSSON BARKSHIRE INC. — Consulting Structural and Civil Engineers

DEPARTMENT OF THE NAVY — NAVAL FACILITIES ENGINEERING COMMAND
ENGINEERING FIELD ACTIVITY, NORTHWEST
POULSBO, WASHINGTON

DSGN LAO DR. GSV CHK. ---
SUPV. LAO CH ENGR.
SUBMITTED BY --- DATE -/-/97
FIRM MEMBER (TITLE)
E.I.C. W. Brown FIRE PROT. Milton
SEC. HD. DIV. HD.
SATISFACTORY TO DATE
TITLE:
APPROVED DATE
FFA NW FOR COMMANDER NAVFAC

CONCURRENCE DATE
TITLE:

NAVAL AIR STATION WHIDBEY ISLAND — OAK HARBOR WASHINGTON
FY-97 BRAC PROJECT P-615T
SONOBUOY STORAGE FACILITY
NAVAL AIR STATION WHIDBEY ISLAND

DRAWING TITLE: PRELOAD SITE, GRADING AND DETAIL PLAN

SIZE — CODE IDENT. NO. NAVFAC DRAWING NO. 8073647
SCALE
CONST. CONTR. NO. N44255-94-C-7381
SPEC. 12-94-7381 SHEET 8 OF 9

DWG. SET LOG		
DATE	PHASE	PURPOSE / SUBMITTAL
5/16/97	CONSTR.	CHECK SET
		FINAL REVIEW
		FINAL REVIEW

GENERAL NOTES:

1. THE CONTRACTOR SHALL LIMIT THE MOVEMENT OF EQUIPMENT, MATERIAL, AND PERSONNEL TO THE WORK AREA. THE SONOBOUY STORAGE FACILITY PRELOAD IS LOCATED WITHIN THE FLIGHT LINE OF NAS WHIDBEY ISLAND. NAS WHIDBEY ISLAND IS AN OPERATIONAL NAVAL FACILITY UNDER CONTROLLED ACCESS. THE CONTRACTOR SHALL COORDINATE ALL ACCESS REQUIREMENTS WITH THE ROICC.
2. THE CONTRACTOR SHALL LIMIT THE EQUIPMENT, MATERIALS AND PERSONNEL TO THE SITE ONLY TO MINIMIZE THE POTENTIAL FOR FOD (FOREIGN OBJECT DEBRIS). THE CONTRACTOR SHALL KEEP THE PROJECT SITE CLEAN AND FREE OF FOD AT ALL TIMES.
3. THE PRELOAD FILL SHALL BE PLACED IN ACCORDANCE WITH THE PROJECT REQUIREMENTS AND DESCRIPTION OF WORK.
4. THE EXISTING TOP SOIL AND ORGANIC MATERIAL EXCAVATED FORM THE PROJECT SITE SHALL BE DISPOSED OF OFF BASE AND OFF OF WHIDBEY ISLAND TO A PERMITTED CITY, COUNTY REGIONAL OR STATE FACILITY AUTHORIZED TO ACCEPT THE MATERIAL.
5. THE CONTRACTOR SHALL NOT COMMENCE GRUBBING AND EXCAVATION UNTIL AUTHORIZED BY THE ROICC.
6. THE SUBGRADE SHALL BE PROOF ROLLED PRIOR TO STRUCTURAL FILL PLACEMENT.
7. THE CONTRACTOR SHALL PLACE THE STRUCTURAL FILL AND PRELOAD MATERIAL IN ACCORDANCE WITH THE PROJECT DOCUMENTS.
8. THE PLACEMENT OF THE SETTLEMENT PLATES, INITIAL AND ON GOING MONITORING SHALL BE THE CONTRACTORS RESPONSIBILITY.
9. THE CONTRACTOR SHALL PROTECT ADJACENT PAVEMENT AND UTILITIES NOT TO BE DEMOLISHED. THE EXISTING UTILITIES SHALL REMAIN OPERATIONAL AT ALL TIMES. THE EXISTING PAVEMENTS SHALL REMAIN ACCESSIBLE AT ALL TIMES.

Sonobuoy Storage Facility
N44255-94-C-7381
8 of 13

Building 2000 Pad
Sonobuoy Storage

REVISIONS				
SYM	DESCRIPTION	PREP'D BY	DATE	APPROVED

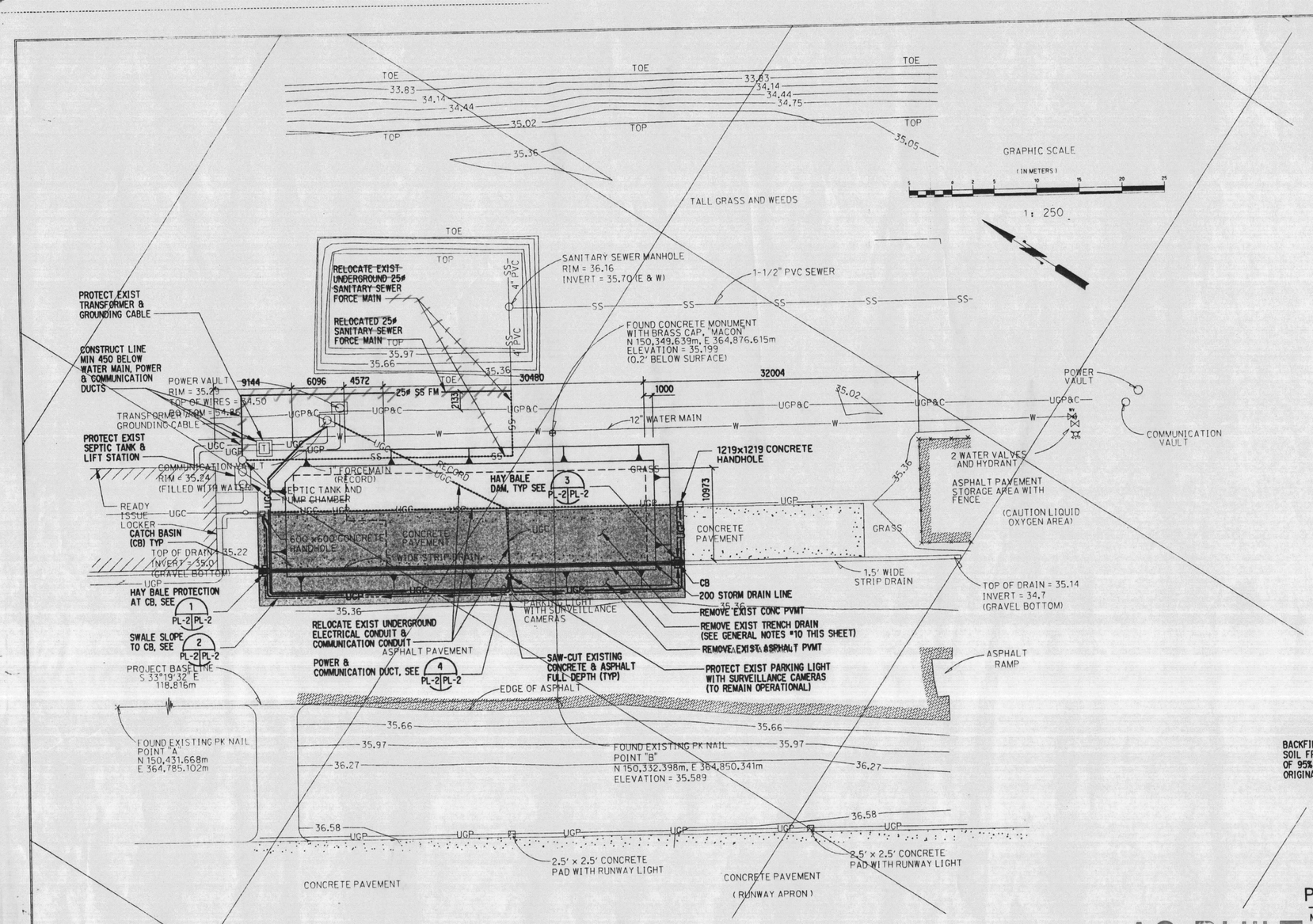

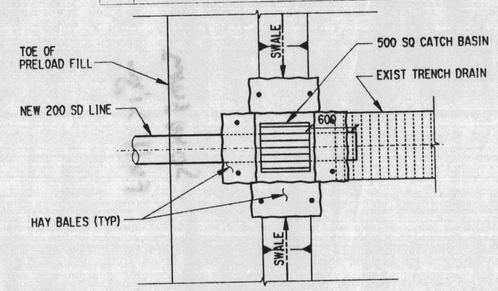

CATCH BASIN DETAIL

1 PL-2 PL-2

NTS

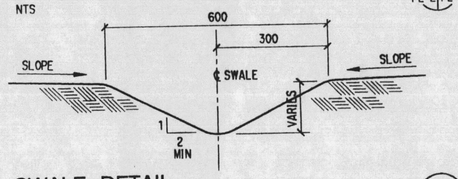

SWALE DETAIL

2 PL-2 PL-2

NTS

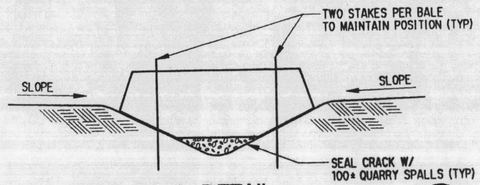

HAY BALE DAM DETAIL

3 PL-2 PL-2

NTS

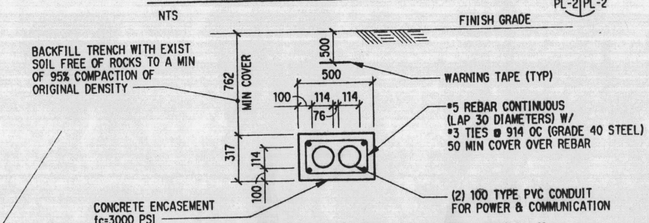

POWER AND COMMUNICATION DUCT DETAIL

4 PL-2 PL-2

NTS

AS-BUILT

GENERAL NOTES:

1. THE CONTRACTOR SHALL LIMIT THE MOVEMENT OF EQUIPMENT, MATERIAL, AND PERSONNEL TO THE WORK AREA. THE SONOBOUY STORAGE FACILITY PRELOAD IS LOCATED WITHIN THE FLIGHT LINE OF NAS WHIDBEY ISLAND. NAS WHIDBEY ISLAND IS AN OPERATIONAL NAVAL FACILITY UNDER CONTROLLED ACCESS. THE CONTRACTOR SHALL COORDINATE ALL ACCESS REQUIREMENTS WITH THE ROICC.
2. THE CONTRACTOR SHALL LIMIT THE EQUIPMENT, MATERIALS AND PERSONNEL TO THE SITE ONLY TO MINIMIZE THE POTENTIAL FOR FOD (FOREIGN OBJECT DEBRIS). THE CONTRACTOR SHALL KEEP THE PROJECT SITE CLEAN AND FREE OF FOD AT ALL TIMES.
3. THE PRELOAD FILL SHALL BE PLACED IN ACCORDANCE WITH THE PROJECT REQUIREMENTS AND DESCRIPTION OF WORK.
4. THE EXISTING TOP SOIL AND ORGANIC MATERIAL EXCAVATED FROM THE PROJECT SITE SHALL BE DISPOSED OF OFF BASE AND OFF OF WHIDBEY ISLAND TO A PERMITTED CITY, COUNTY REGIONAL OR STATE FACILITY AUTHORIZED TO ACCEPT THE MATERIAL.
5. THE CONTRACTOR SHALL NOT COMMENCE GRUBBING AND EXCAVATION UNTIL AUTHORIZED BY THE ROICC.
6. THE SUBGRADE SHALL BE PROOF ROLLED PRIOR TO STRUCTURAL FILL PLACEMENT.
7. THE CONTRACTOR SHALL PLACE THE STRUCTURAL FILL AND PRELOAD MATERIAL IN ACCORDANCE WITH THE PROJECT DOCUMENTS.
8. THE PLACEMENT OF THE SETTLEMENT PLATES, INITIAL AND ON GOING MONITORING SHALL BE THE CONTRACTORS RESPONSIBILITY.
9. THE CONTRACTOR SHALL PROTECT ADJACENT PAVEMENT AND UTILITIES NOT TO BE DEMOLISHED. THE EXISTING UTILITIES SHALL REMAIN OPERATIONAL AT ALL TIMES. THE EXISTING PAVEMENTS SHALL REMAIN ACCESSIBLE AT ALL TIMES.
10. THE CONTRACTOR SHALL REMOVE THE EXISTING CONCRETE GUTTER AND GRATES. THE CONCRETE GRATES ARE TO BE REUSED BY OTHERS AND STOCKPILED AS DIRECTED BY THE ROICC.

DWG. SET LOC	
PHASE / PROPOSE / SUBMITTAL	
CONSUL. CHECK SET	
UNDER REVIEW	
FINAL REVIEW	
DATE	
5/16/97	

IF SHEET LESS THAN 914mm x 609mm IT IS REDUCED PRINT SCALE REDUCED ACCORDINGLY

DISCIPLINE - SHEET PL-2

A-E STAMP: JACK L. GUTIERREZ, STATE OF WASHINGTON, 19881, REGISTERED PROFESSIONAL ENGINEER, EXPIRES 06/09/97

A-E FIRM: SKILLING WARD MAGNUSSON BARKSHIRE INC. Consulting Structural and Civil Engineers

DSGN LAO DR. GSV CHK. ---
SUPV. LAO CH ENGR.
SUBMITTED BY --- DATE -/-/97
FIRM MEMBER (TITLE)
E.I.C. FIRE PROT. Nixon
SEC. HD. DIV. HD.
SATISFACTORY TO DATE
TITLE:
APPROVED DATE
FFA NW FOR COMMANDER NAVFAC
CONCURRENCE DATE
TITLE:

DEPARTMENT OF THE NAVY NAVAL FACILITIES ENGINEERING COMMAND
ENGINEERING FIELD ACTIVITY, NORTHWEST
POULSBO, WASHINGTON

NAVAL AIR STATION WHIDBEY ISLAND OAK HARBOR, WASHINGTON
FY-97 BRAC PROJECT P-615T
SONOBUOY STORAGE FACILITY
NAVAL AIR STATION WHIDBEY ISLAND

DRAWING TITLE: PRELOAD UTILITY AND DETAIL PLAN

SIZE — CODE IDENT. NO. NAVFAC DRAWING NO. 8073648
SCALE
CONST. CONTR. NO. N44255-94-C-7381
SPEC. 12-94-7381 SHEET 9 OF 9

Sonobuoy Storage Facility N44255-94-C-7381 9 of 13

Building 2800 Sonobuoy Storage

plt J:\p615t\pl_2.dgn Tue Jun 24 15:30:06 1997

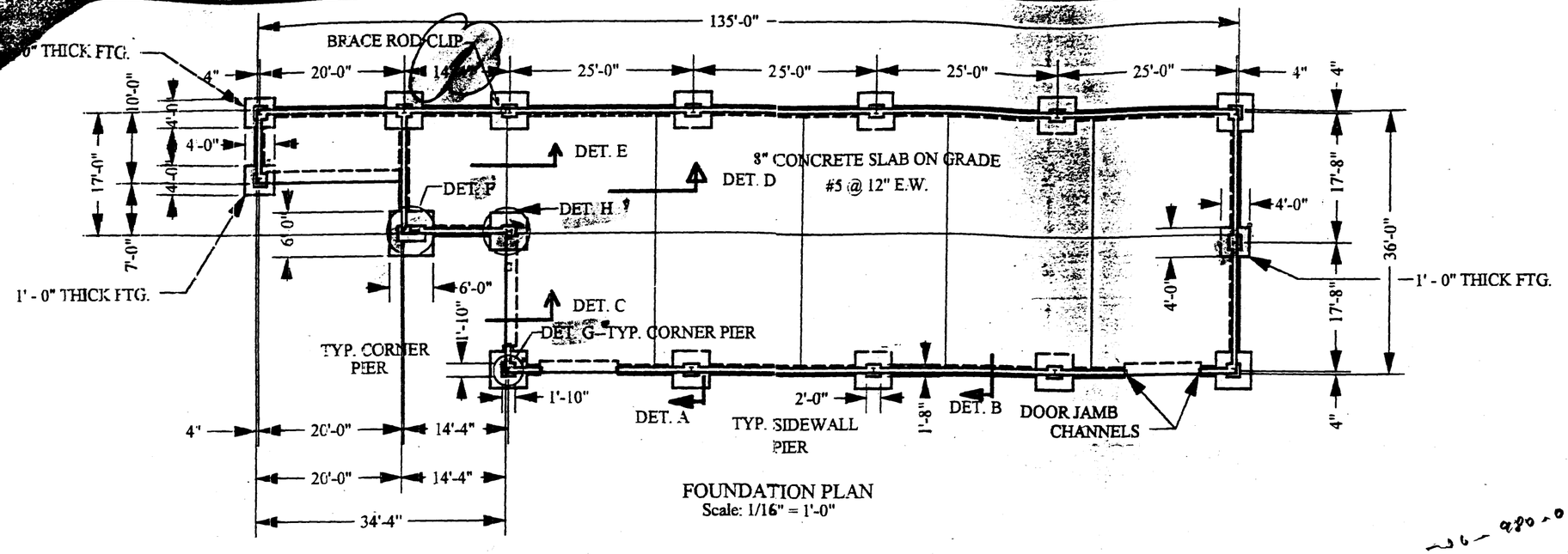

FOUNDATION PLAN
Scale: 1/16" = 1'-0"

100
120
60
30

GENERAL STRUCTURAL NOTES

CODES AND STANDARDS
1. UNIFORM BUILDING CODE, 1994 EDITION
2. ACI BUILDING CODE (ACI 318-95)

LOADS
1. SLAB ON GRADE
   UNIFORM LOAD–17.0 kN/m² (355 lbs./ft.²)
   CONCENTRATED LOAD–4.67 kN (1.05 kips) AXLE-LOAD FORKLIFT
   AASHTO HS-20

SOIL DATA
TAKEN FROM HART CROWSER GEOTECHNICAL REPORT
1. ALLOWABLE BEARING PRESSURE 2,000 PSF
   1/3 INCREASE ALLOWED FOR WIND AND SEISMIC LOADS
2. BOTTOM OF FOOTINGS TO BE A MINIMUM OF 18 IN. BELOW LOWEST ADJACENT GRADE. CONTINUOUS STRIP FOOTINGS TO HAVE A MINIMUM WIDTH OF 18 IN. UNLESS SHOWN OTHERWISE ON DETAILS.
3. COEFFICIENT OF FRICTION 0.5 BETWEEN CONCRETE AND SOIL
4. PASSIVE SOIL PRESSURE 300 PCF (EQUIV. FLUID PRESSURE) FOR COMPACTED AND CONFINED SOIL.
5. MODULUS OF SUBGRADE REACTION 200 PCI

MATERIAL STRENGTHS
1. CONCRETE f'_c = 4,500 PSI @ 28 DAYS
2. REINFORCEMENT ASTM A615, GRADE 60
3. ANCHOR BOLTS, NUTS, & WASHERS ASTM A307

GENERAL
1. VERIFY THE LOCATION OF ALL ANCHOR BOLTS WITH METAL BUILDING SUPPLIER.
2. CONTRACTOR IS RESPONSIBLE FOR PROPER SUBGRADE PREPARATION IN ACCORDANCE WITH HART CROWSER GEOTECHNICAL REPORT.

ROLF F. AMUNDSON
STATE OF WASHINGTON
18968
REGISTERED PROFESSIONAL ENGINEER
03/23/98
EXPIRES 04/24/99

AS-BUILT

SONOBUOY STORAGE FACILITY		
SCALE: 1/16" = 1'-0"	APPROVED BY:	DRAWN BY RFA
DATE: 03/23/98		REVISED
NAVAL AIR STATION WHIDBEY ISLAND		
FOUND. PLAN & GEN. STRUCT. NOTES		DRAWING NUMBER S-1

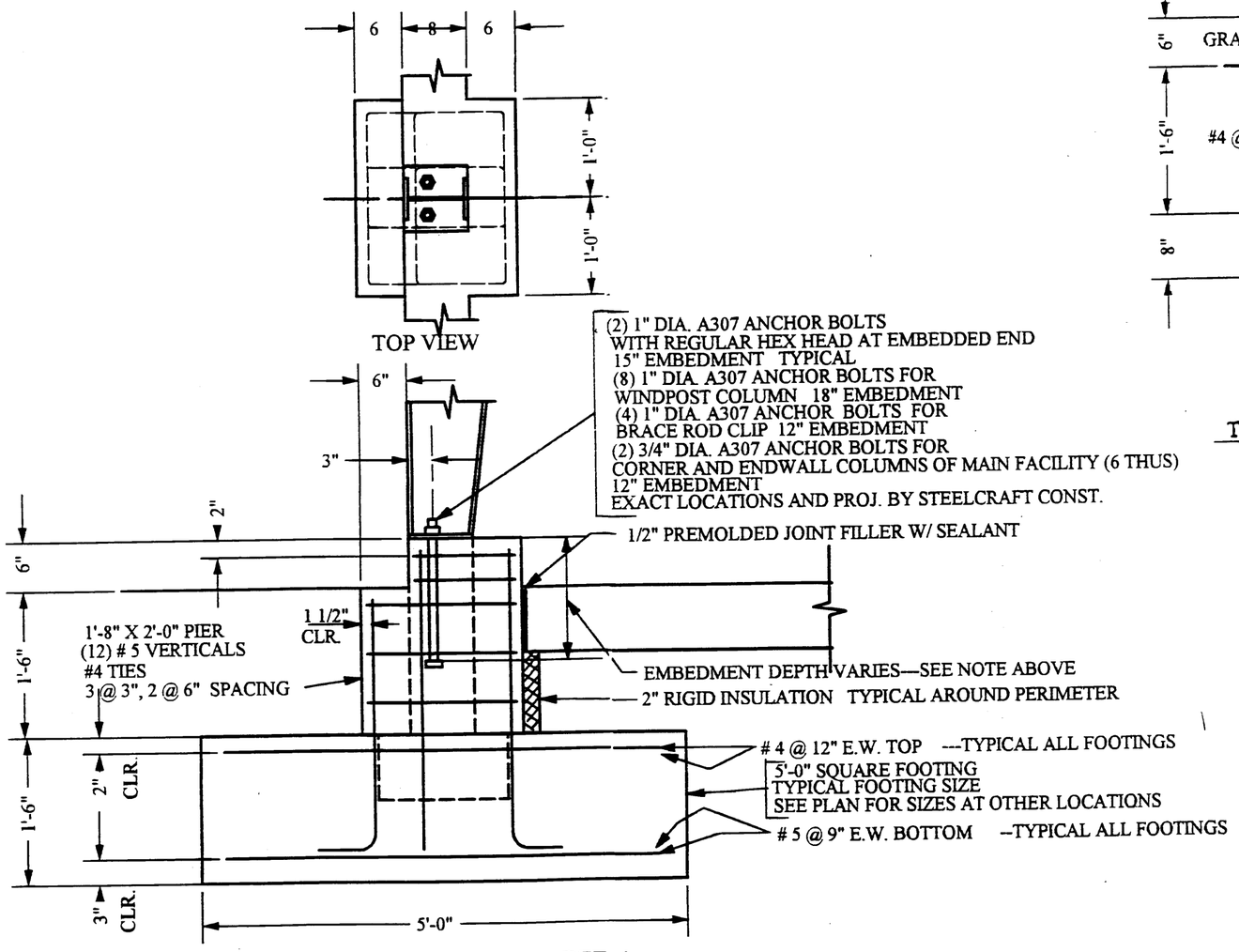

TYPICAL FOOTING DETAIL—DET. A
SCALE: 3/4" = 1' -0"

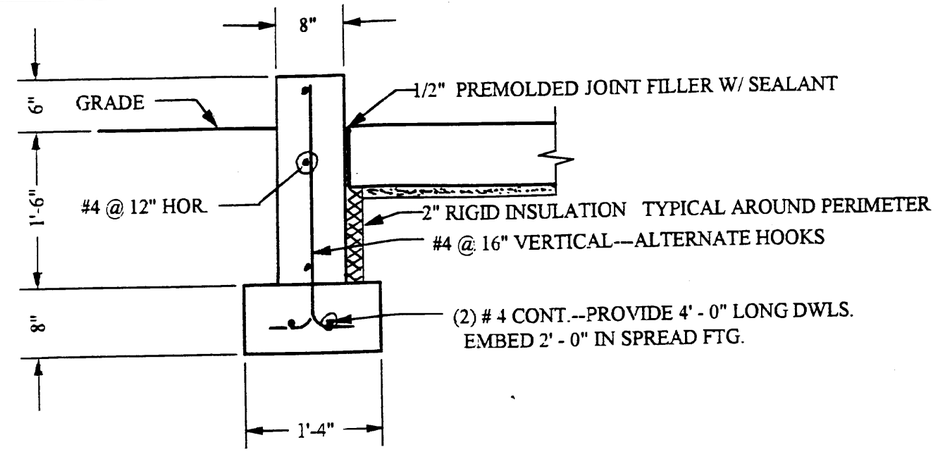

TYPICAL CURB WALL DETAIL--DET. B
SCALE: 3/4" = 1' - 0"

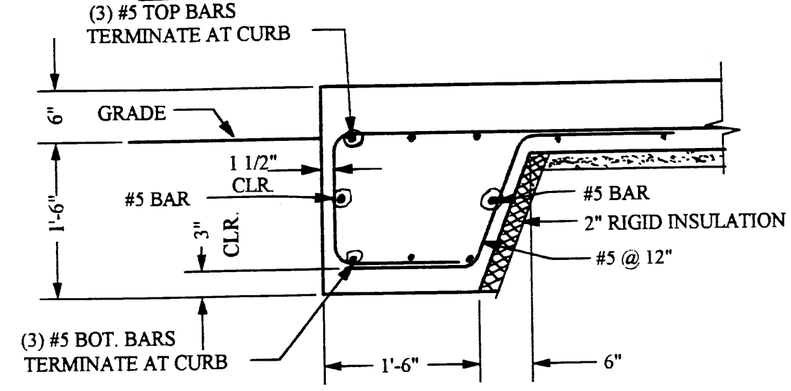

TYPICAL SLAB EDGE DETAIL--DET. C
SCALE: 3/4" = 1' - 0"

AS-BUILT

SONOBUOY STORAGE FACILITY		
SCALE: VARIES	APPROVED BY:	DRAWN BY RFA
DATE: 03/23/98		REVISED
NAVAL AIR STATION WHIDBEY ISLAND		
STRUCTURAL DETAILS		DRAWING NUMBER S-2

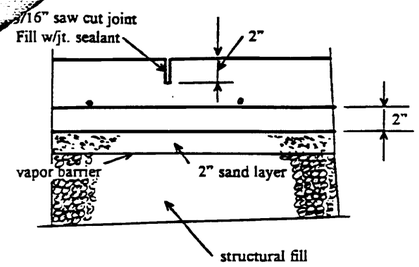

Typical Control Joint--Det. D

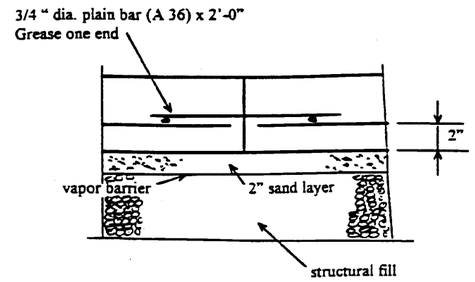

Typical Construction Joint--Det. E

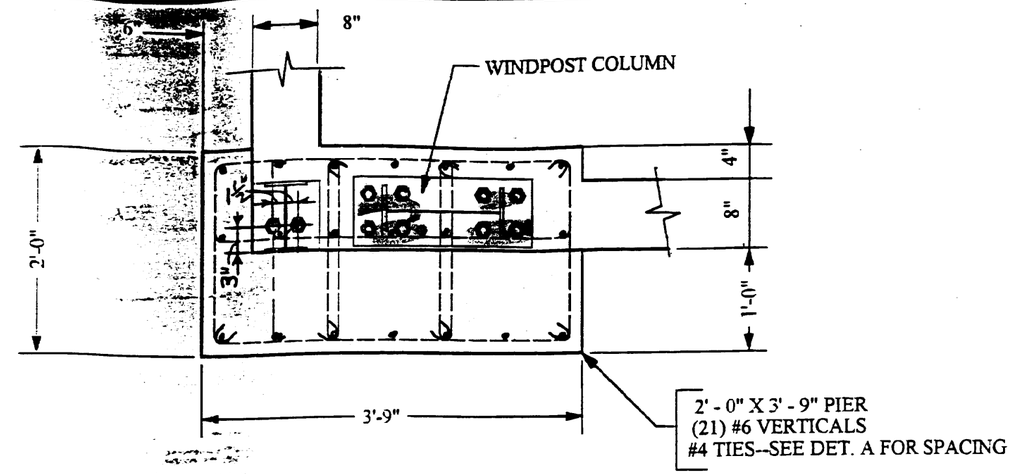

PIER DETAIL AT WINDPOST COLUMN--DET. F
SCALE: 3/4" = 1' - 0"

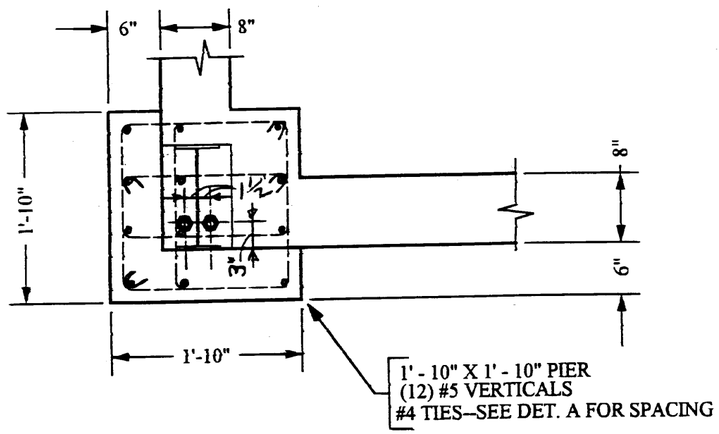

TYPICAL CORNER COLUMN PIER DETAIL--DET. G
SCALE: 3/4" = 1'- 0"

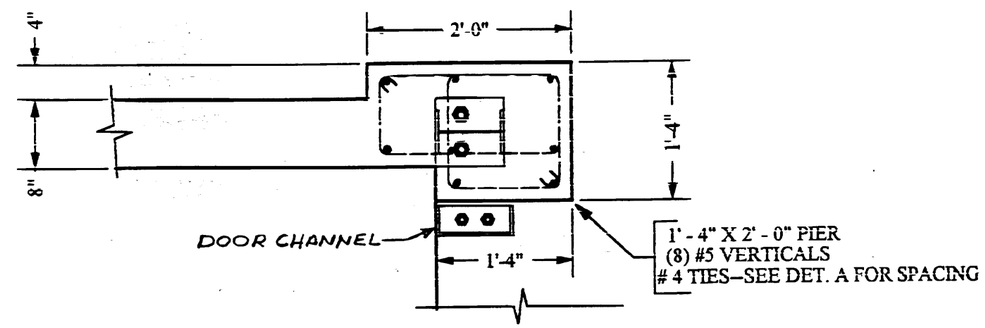

END WALL PIER DETAIL AT NORTH END--DET. H
SCALE: 3/4" = 1'-0"

AS-BUILT

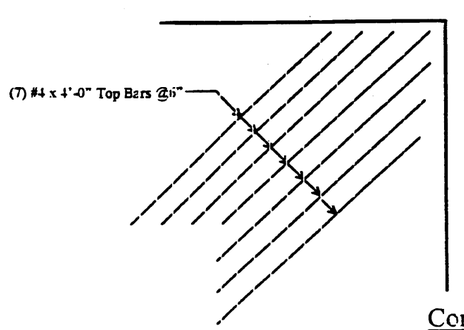

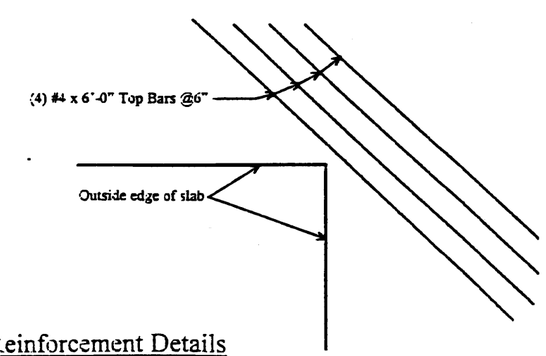

Corner Reinforcement Details
No Scale

ROLF F. AMUNDSON
STATE OF WASHINGTON
13965
REGISTERED
PROFESSIONAL ENGINEER
03/23/98
EXPIRES 04/24/99

SONOBUOY STORAGE FACILITY		
SCALE: VARIES	APPROVED BY:	DRAWN BY RFA
DATE: 03/23/98		REVISED
NAVAL AIR STATION WHIDBEY ISLAND		
STRUCTURAL DETAILS		DRAWING NUMBER S-3

REVISIONS				
SYM	DESCRIPTION	PREP'D BY	DATE	APPROVED

FY-97 BRAC PROJECT P-615T

SONOBUOY STORAGE FACILITY

NAVAL AIR STATION WHIDBEY ISLAND
OAK HARBOR, WASHINGTON

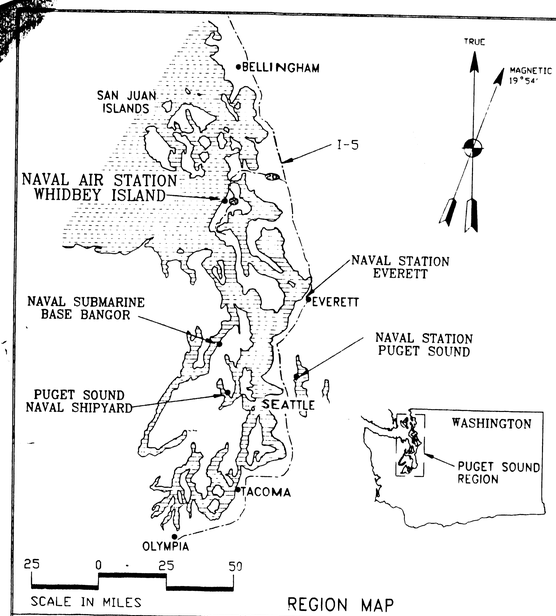

REGION MAP

VICINITY MAP

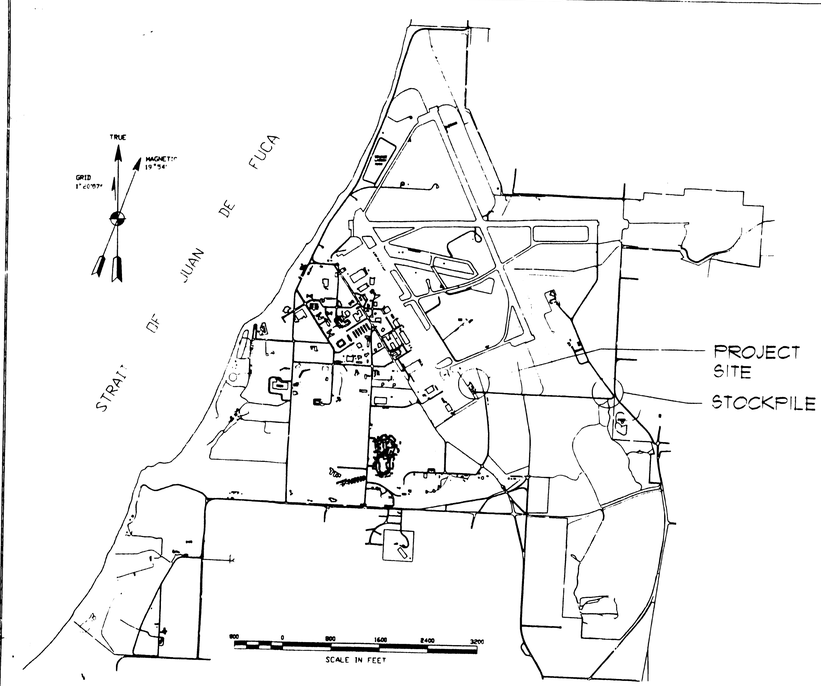

N.A.S. BASE MAP

Environmental Sat-To: W.I. Enviro. Aff. Off., K.A. Souders, 7-1-97

Functional Sat-To: W.I. Weapons, Chief F.A. Deniz, 7-2-97

ROICC Sat-To: K. A. McAteer, 6-26-97

DRAWING INDEX

DRAWING NO.	DRAWING TITLE	NAVFAC #'S
T-1	TITLE SHEET (REFERENCE)	8073535
C-1	SITE SURVEY (REFERENCE)	8073536
C-2	SITE PAVING AND DETAILS (CONCEPT)	8073537
C-3	GRADING UTILITIES & DETAIL PLAN (CONCEPT)	8073646
A-1	SITE PLAN, ABBR'S & SYM'S (CONCEPT)	8073538
A-2	FLOOR PLAN, SCHEDULES (CONCEPT)	8073539
A-3	BUILDING SECTIONS, ELEVATIONS (CONCEPT)	8073540
PL-1	PRELOAD PLAN, SITE GRADING & DETAIL PLAN (REFERENCE)	8073647
PL-2	PRELOAD UTILITY & DETAIL PLAN (REFERENCE)	8073648

AS BUILT

IF SHEET LESS THAN 914mm x 609mm
IT IS REDUCED PRINT
SCALE REDUCED ACCORDINGLY

DISCIPLINE - SHEET: T-1

A-E STAMP

CNJJ Architects
120 Lakeside Avenue Suite 100
Seattle, Washington 98122
Telephone 206 324 1400

A-E FIRM

DSGN: DR. RAH CHK.
SUPV. CH ENGR.
SUBMITTED BY: K. TUJOKARE TUJOKARSOV 3/28/97 DATE
FIRM MEMBER (TITLE)
E. I. C. FIRE PROT.
SEC. HD. DIV. HD.
SATISFACTORY TO DATE
TITLE:
CONCURRENCE DATE
APPROVED DATE
TITLE: FFA NW FOR COMMANDER NAVFAC

DEPARTMENT OF THE NAVY NAVAL FACILITIES ENGINEERING COMMAND
ENGINEERING FIELD ACTIVITY, NORTHWEST
POULSBO, WASHINGTON

NAVAL AIR STATION WHIDBEY ISLAND OAK HARBOR, WASHINGTON
FY-97 BRAC PROJECT P-615T
SONOBUOY STORAGE FACILITY
NAVAL AIR STATION WHIDBEY ISLAND

DRAWING TITLE: TITLE SHEET

SIZE — CODE IDENT. NO.
SCALE
NAVFAC DRAWING NO. 8073535 Ver. 15
CONST. CONTR. NO. N44255-94-C-7381
SPEC. 12-94-7381 SHEET 1 OF 9

DATE	PHASE	PROPOSE / SUBMITTAL
3/28/97	OVERALL	CONCEPT REVIEW
		OWNER REVIEW
		FINAL REVIEW

DWG. SET LOC
CNJJ PROJECT #96006

NAVFAC # 8073535
Project # P-615T
Const. Control # N44255-94 C-7381

1 of 13

Building 2400 Sonobuoy Storage 1 of 9 13th