## KEY NOTES:

1. SPLICE EXISTING 15KV FEEDER AND EXTEND.
2. REFER TO SHEET E-621 FOR CONTINUATION.
3. REFER TO SHEET E-611 FOR CONTINUATION.
4. REFER TO SHEET E-641 FOR CONTINUATION.

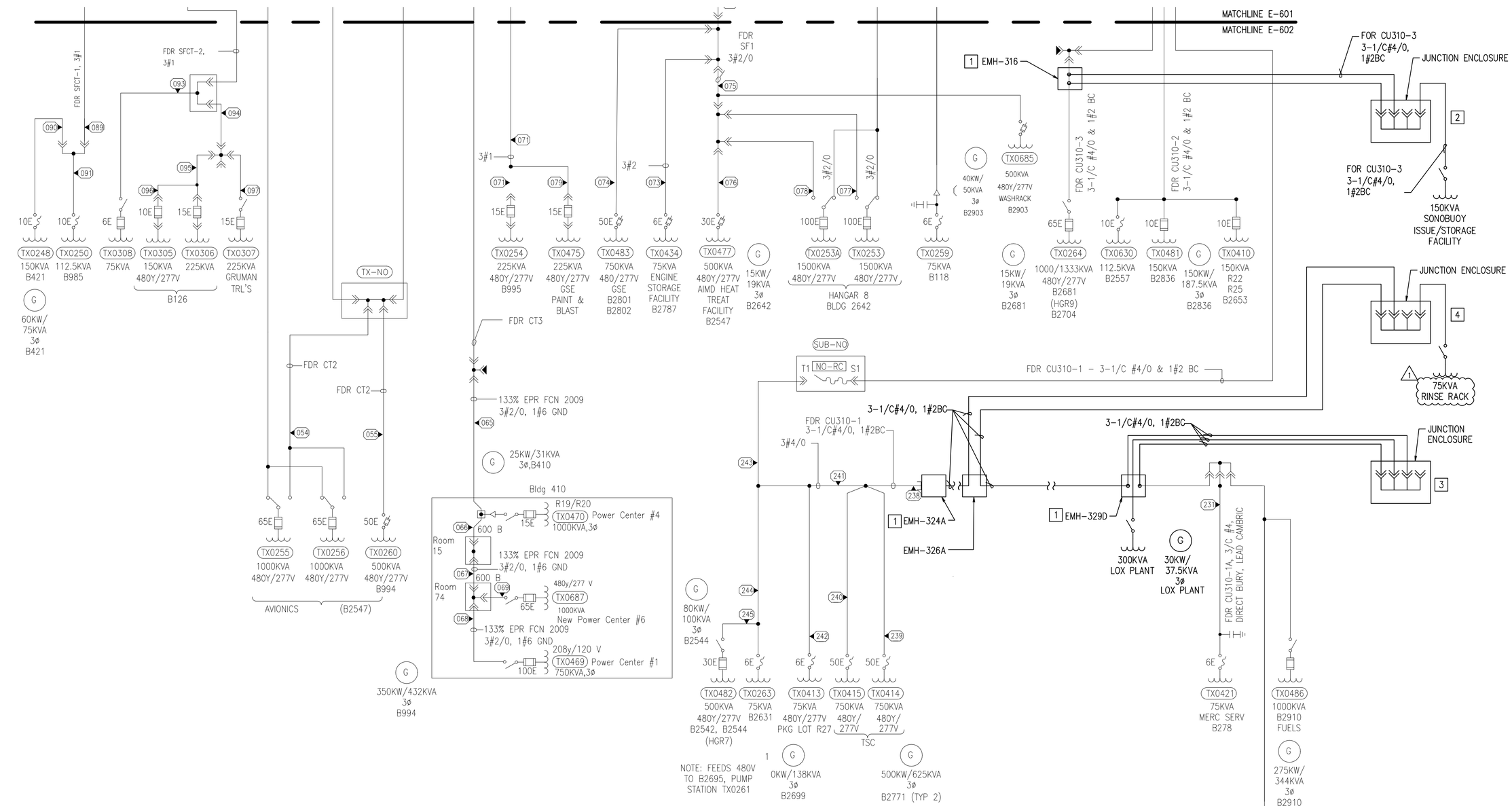


## BASE POWER ONE-LINE DIAGRAM

NTS

| SYM | DESCRIPTION | DATE | APPR |
|---|---|---|---|
| 1 | AMENDMENT 005 | 3/27/15 | GLL |

NAVFAC

SEAL: STATE OF WASHINGTON 30476 REGISTERED PROFESSIONAL ENGINEER

SPARLING
WORK TOGETHER | STAND APART™
4100 194th Street SW, Suite 400
Lynnwood, Washington 98036-6013
206-667-0553 800-667-0610
www.sparling.com

A/E INFO

APPROVED
FOR COMMANDER NAVFAC
ACTIVITY: NAS WHIDBEY ISLAND
SATISFACTORY TO DATE
DES KMD DRW AM CHK GLL
<<CPM/DM>> JOSEPH KISIDAY
BRANCH MANAGER
CHIEF ENG/ARCH
<<XX>>

DEPARTMENT OF THE NAVY
NAVAL FACILITIES ENGINEERING COMMAND
NAVAL FACILITIES ENGINEERING COMMAND ~ NORTHWEST
NAVAL AIR STATION WHIDBEY ISLAND
AULT FIELD - OAK HARBOR, WA
NAVAL AIR STATION WHIDBEY ISLAND
OAK HARBOR, WA
FY-15 MCON PROJECT P-259 P-8A AIRCRAFT APRON EXPANSION - PART A
BASE POWER ONE-LINE DIAGRAM

SCALE: AS NOTED
EPROJECT NO.:
CONSTR. CONTR. NO.: N44255-15-C-6003
NAVFAC DRAWING NO.: 16030537
SHEET 283 OF 302
E-602

DRAWFORM REVISION: 10 MARCH 2009