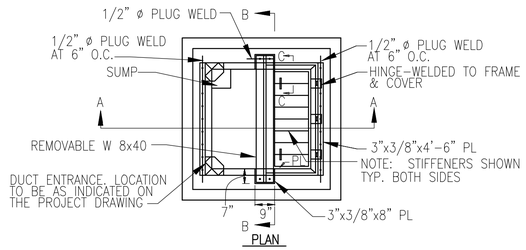

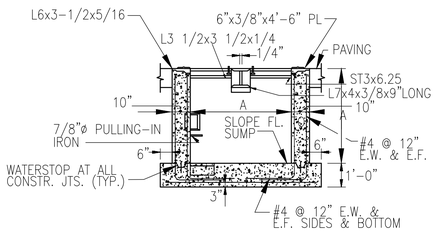

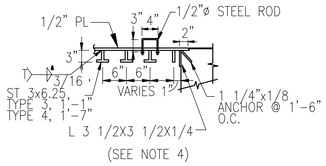

NOTES:

1. ENTRANCE OF DUCTS INTO HANDHOLE MAY BE MADE ON SIDE FACES OR CORNERS AS REQUIRED.
2. FOR DETAILS OF CABLE RACKS, DUCT ENTRANCE AND PULLING-IN IRONS, SEE PLATE UG-7.
3. HANDHOLE AND COVER IS DESIGNED FOR MAXIMUM SINGLE WHEEL LOAD OF 50,000 LB. OR DUAL WHEEL LOAD OF 90,000 LB.
4. COVER SHALL BE MADE OF STRUCTURAL STEEL CONFORMING TO ASTM A 36/A 36M.
5. MINIMUM COMPRESSIVE STRENGTH OF CONCRETE SHALL BE 3000 PSI.
6. COVER SHALL BE BOLTED SHUT.

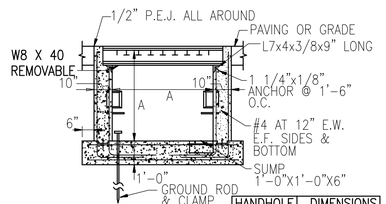

HANDHOLE TYPE	DIMENSIONS A
3	3'-0"
4	4'-0"

STANDARD ELECTRICAL MANHOLE (TRAFFIC/AIRFIELD) TYPES 3 & 4 (C1)

NTS ES101, ES107, ES117

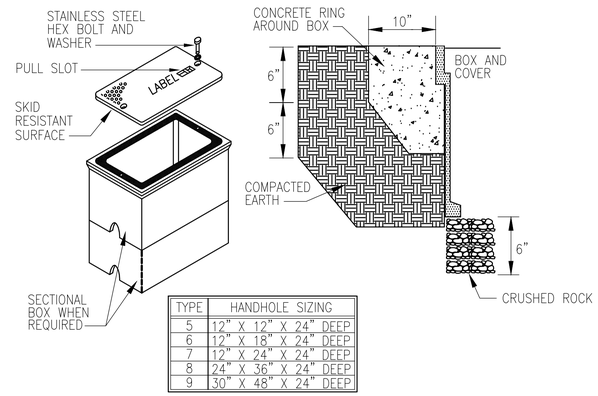

TYPE	HANDHOLE SIZING
5	12" X 12" X 24" DEEP
6	12" X 18" X 24" DEEP
7	12" X 24" X 24" DEEP
8	24" X 36" X 24" DEEP
9	30" X 48" X 24" DEEP

HANDHOLE REQUIREMENTS

1. HOUSING SHALL BE A POLYMER CONCRETE REINFORCED WITH A HEAVY WEAVE FIBERGLASS REINFORCING WITH COMPRESSIVE STRENGTH OF NO LESS THAN 10,000 PSI.
2. COVER AND BOX SHALL WITHSTAND A SERVICE LOAD OF NO LESS THAN 15,000 LBS OVER A 10" x 10" AREA.
3. PROVIDE STAINLESS STEEL BOLTS AND INSERTS.
4. PROVIDE WITH (2) 2 1/2" MOUSEHOLES.
5. PROVIDE LABEL "ELECTRICAL" FOR POWER HANDHOLES OR "COMM" FOR COMMUNICATION HANDHOLES, OR AS INDICATED.

STANDARD ELECTRICAL HANDHOLE (NONTRAFFIC)
(COMPOSITE/FIBERGLASS) TYPES 5, 6, 7, 8 & 9

HANDHOLE (C3)

NTS ES101, ES103, ES105, ES107, ES109

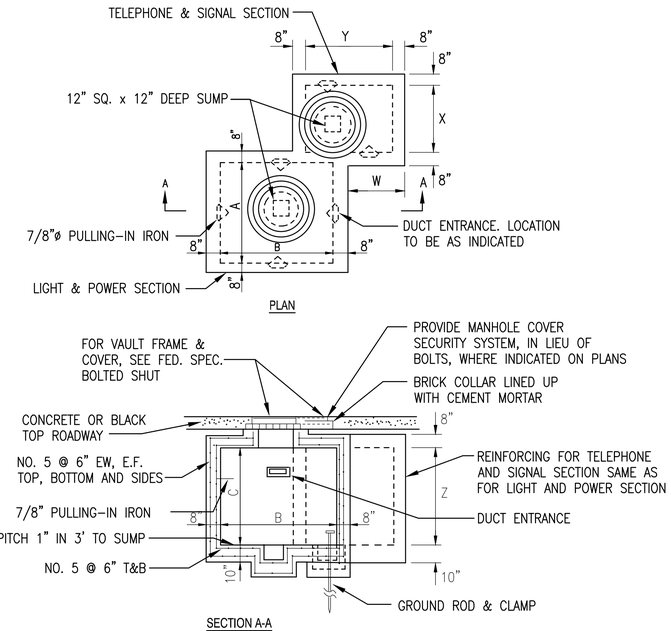

TYPE	VAULT DIMENSIONS POWER SECTION A	B	C	SIGNAL SECTION W	X	Y	Z
3	6'-0"	6'-0"	6'-6"	3'-0"	4'-0"	4'-0"	6'-0"
4	6'-0"	6'-0"	6'-6"	4'-0"	5'-0"	6'-0"	6'-6"
5	6'-0"	8'-0"	6'-6"	3'-0"	4'-0"	4'-0"	6'-0"
6	6'-0"	8'-0"	6'-6"	4'-0"	5'-0"	6'-0"	6'-6"

STANDARD ELECTRICAL VAULTS (TRAFFIC) TYPES 3,4,5 AND 6 (C5)

NTS ES108, ES109, ES117, ES118, ES119

DETAIL NOTES:

1. BOND GROUND CONDUCTORS TO EXISTING MANHOLE GROUND SYSTEMS WHERE APPLICABLE.

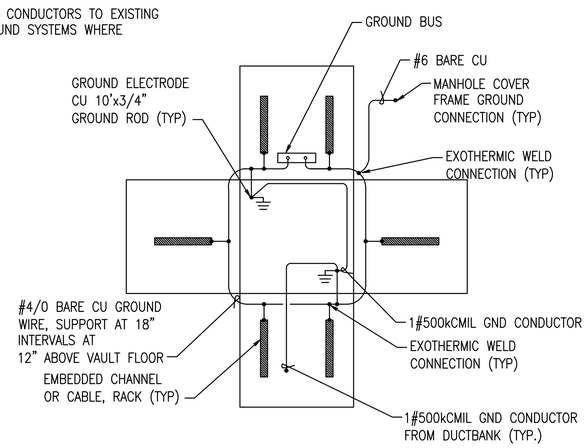

MANHOLE FOLDOUT - TYP. GROUNDING (A1)

NTS

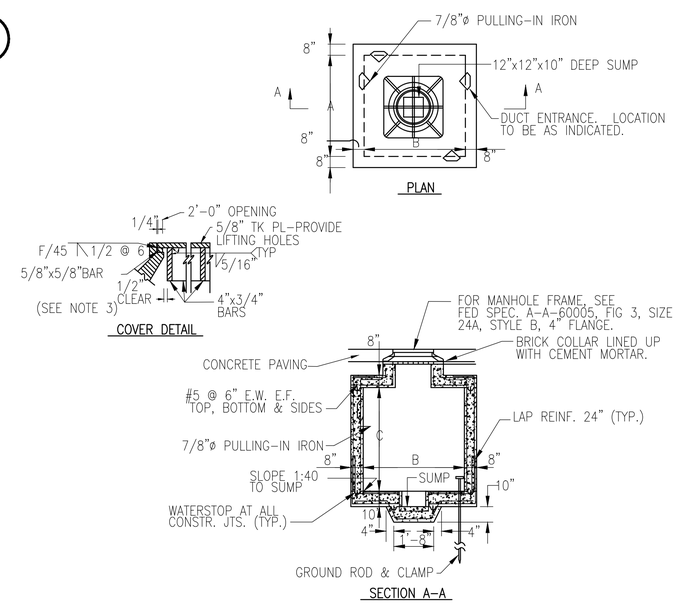

NOTES:

1. MANHOLE AND COVERS ARE DESIGNED FOR MAXIMUM DUAL WHEEL LOAD OF 100,000 LB. (1)
2. FOR DETAILS OF CABLE RACKS, DUCT ENTRANCE AND PULLING-IN IRONS, SEE PLATE UG-7.
3. COVER SHALL BE MADE OF STRUCTURAL STEEL CONFORMING TO ASTM A 36/A 36M.
4. MINIMUM CONCRETE COMPRESSIVE STRENGTH SHALL BE 3000 PSI.
5. COVER SHALL BE BOLTED SHUT.
6. PROVIDE MANHOLE COVER SECURITY SYSTEM, IN LIEU OF BOLTS, WHERE INDICATED ON PLANS.

MANHOLE DIMENSIONS TYPE	A	B	C(AT HIGH PT.)
5	6'-0"	6'-0"	6'-6"
6	6'-0"	8'-0"	6'-6"

STANDARD ELECTRICAL MANHOLE (AIRFIELD) TYPES 5 & 6 (A3)

NTS

1	AMENDMENT 005	3/27/15	GLL	
		DATE		APPR

NAVFAC

SEAL

SPARLING
WORK TOGETHER | STAND APART™
4100 194th Street SW, Suite 400
Lynnwood, Washington 98036-6613
206-667-0555 800-667-0610
www.sparling.com
A/E INFO

APPROVED
FOR COMMANDER NAVFAC
ACTIVITY
NAS WHIDBEY ISLAND
SATISFACTORY TO DATE
DES KMD DRW AM CHK GLL
<<PM/DM>> JOSEPH KISIDAY
BRANCH MANAGER
CHIEF ENG/ARCH
<<XXX>>

DEPARTMENT OF THE NAVY
NAVAL FACILITIES ENGINEERING COMMAND
NAVAL AIR STATION WHIDBEY ISLAND
NAVAL FACILITIES ENGINEERING COMMAND ~ NORTHWEST
AULT FIELD - OAK HARBOR, WA
NAVAL AIR STATION WHIDBEY ISLAND
OAK HARBOR, WA
FY-15 MCON PROJECT P-259 P-8A AIRCRAFT APRON EXPANSION - PART A
DETAILS

SCALE: AS NOTED
EPROJECT NO.:
CONSTR. CONTR. NO.
N44255-15-C-6003
NAVFAC DRAWING NO.
16030551
SHEET 297 OF 302
E-813

DRAWFORM REVISION: 10 MARCH 2009