INSTRUMENTATION ABBREVIATIONS

AA	ANALOG ALARM	FTP	FUEL TRANSFER PUMP	NONRED	NON-REDUNDANT
AI	ANALOG INPUT	FV	FLOW VALVE	P	PUMP
AO	ANALOG OUTPUT	HOA	HAND-OFF-AUTO	PB	PUSH BUTTON
ATG	AUTOMATIC TANK GAUGING	HS	HAND SWITCH	PC	PERSONAL COMPUTER
BKRS	BREAKERS	I	INTERLOCK	PCP	PUMP CONTROL PANEL
BLDG	BUILDING	I/O	INPUT/OUTPUT	PCV	PRESSURE CONTROL VALVE
BPCV	BYPASS CONTROL VALVE	LAH	LEVEL ALARM HIGH	PI	PRESSURE INDICATOR
CPU	CENTRAL PROCESSING UNIT	LAHH	LEVEL ALARM HIGH-HIGH	PIT	PRESSURE INDICATING TRANSMITTER
CV	CONTROL VALVE	LAL	LEVEL ALARM LOW	PRT	PRODUCT RECOVERY TANK
DI	DIGITAL INPUT	LE	LEVEL ELEMENT	RECEPT	RECEPTACLE
DO	DIGITAL OUTPUT	LI	LEVEL INDICATOR	RTU	REMOTE TERMINAL UNIT
DPT	DIFFERENTIAL PRESSURE TRANSMITTER	LIT	LEVEL INDICATING TRANSMITTER	S	SOLENOID
ESD	EMERGENCY STOP DEVICE	LG	LIGHT GREEN	SYS	SYSTEM
ESO	EMERGENCY SHUT-OFF	LR	LIGHT RED	TAH	TEMPERATURE ALARM HIGH
FA	FLOW ALARM	LSH	LEVEL SWITCH HIGH	TE	TEMPERATURE ELEMENT
FAL	FLOW ALARM LOW	LSHH	LEVEL SWITCH HIGH-HIGH	UPS	UNINTERRUPTIBLE POWER SUPPLY
FCV	FLOW CONTROL VALVE	LSL	LEVEL SWITCH LOW	PLC	PERSONAL COMPUTER
FI	FLOW INDICATOR	LT	LEVEL TRANSMITTER	XA	ALARM STATUS
FP	FUEL PUMP	M	MOTOR	YSA	EMERGENCY SAFETY ALARM
FQM	FUEL QUALITY MONITOR	MAX	MAXIMUM	YSS	EMERGENCY SAFETY SWITCH
FS	FLOW SWITCH	MAV	MANUAL AIR VENT	ZA	POSITION ALARM
FSH	FLOW SWITCH HIGH	MC	MOTOR CONTROLLER	ZS	POSITION SWITCH
FSL	FLOW SWITCH LOW	MCC	MOTOR CONTROL CENTER	ZSO	POSITION SWITHC OPEN
FT	FEET	MISC	MISCELLANEOUS		
		MOV	MOTOR OPERATED VALVE		

NOTE: SEE C-001, S-001, M-001 AND E-001 FOR ADDITIONAL ABBREVIATIONS.

INSTRUMENTATION LEGEND

HS 102 / HOA

HS-100
- LOOP OR TAG NUMBER
- FUNCTION OF THE INDIVIDUAL INSTRUMENT
- FIRST LETTER INDICATES MEASURED OR INITIATING VARIABLE

LG 100

LG-100
- LOOP OR TAG NUMBER
- LAMP COLOR
- PILOT OR INDICATOR LIGHT

HS 100 — FIELD MOUNTED INSTRUMENT

LI 507 — PANEL MOUNTED INSTRUMENT

HS 100 — MCC MOUNTED INSTRUMENT

SYM	DESCRIPTION	DATE	APPR

NAVFAC

COMMONWEALTH OF VIRGINIA
DONALD W. NODES
Lic. No.037747
05/04/16
PROFESSIONAL ENGINEER
SEAL

Austin Brockenbrough
ENGINEERING • CONSULTING
A/E INFO

APPROVED:
FOR COMMANDER NAVFAC 5/16/2016

ACTIVITY
APPROVED BY ANDREA LEMON VIA EMAIL

SATISFACTORY TO DATE 4/4/16

DES DWN DRW WMG CHK WVB

PM/DM LET/RER

BRANCH MANAGER SLE

DESIGN DIRECTOR R.B. FITCH, III P.E.

FIRE PROTECTION MGE

DEPARTMENT OF THE NAVY
NAVAL FACILITIES ENGINEERING COMMAND
LANT CAPITAL IMPROVEMENTS
NAVAL FACILITIES ENGINEERING COMMAND ATLANTIC
NORFOLK, VIRGINIA
CAMP LEMONNIER
DJIBOUTI AFRICA
DESC 1701/P-1701
CONSTRUCT FUEL STORAGE FACILITIES
ABBREVIATIONS, LEGEND AND NOTES

SCALE: AS NOTED

EPROJECT NO.: 1344008

CONSTR. CONTR. NO.
N62470-16-R-6004

NAVFAC DRAWING NO.
14047108

SHEET 144 OF 186

MI001

DRAWFORM REVISION: 10 MARCH 2009

FILE NAME: G:\14 Jobs\14-013 Djibouti - Fuel Storage Facility - NAVFAC LANT\CAD AutoCAD\MI\MI001 ABBREVIATIONS, LEGEND AND NOTES.dwg LAYOUT NAME: ABBREVIATIONS LEGEND AND NOTES PLOTTED: Thursday, May 05, 2016 - 3:12pm USER: rhopkins

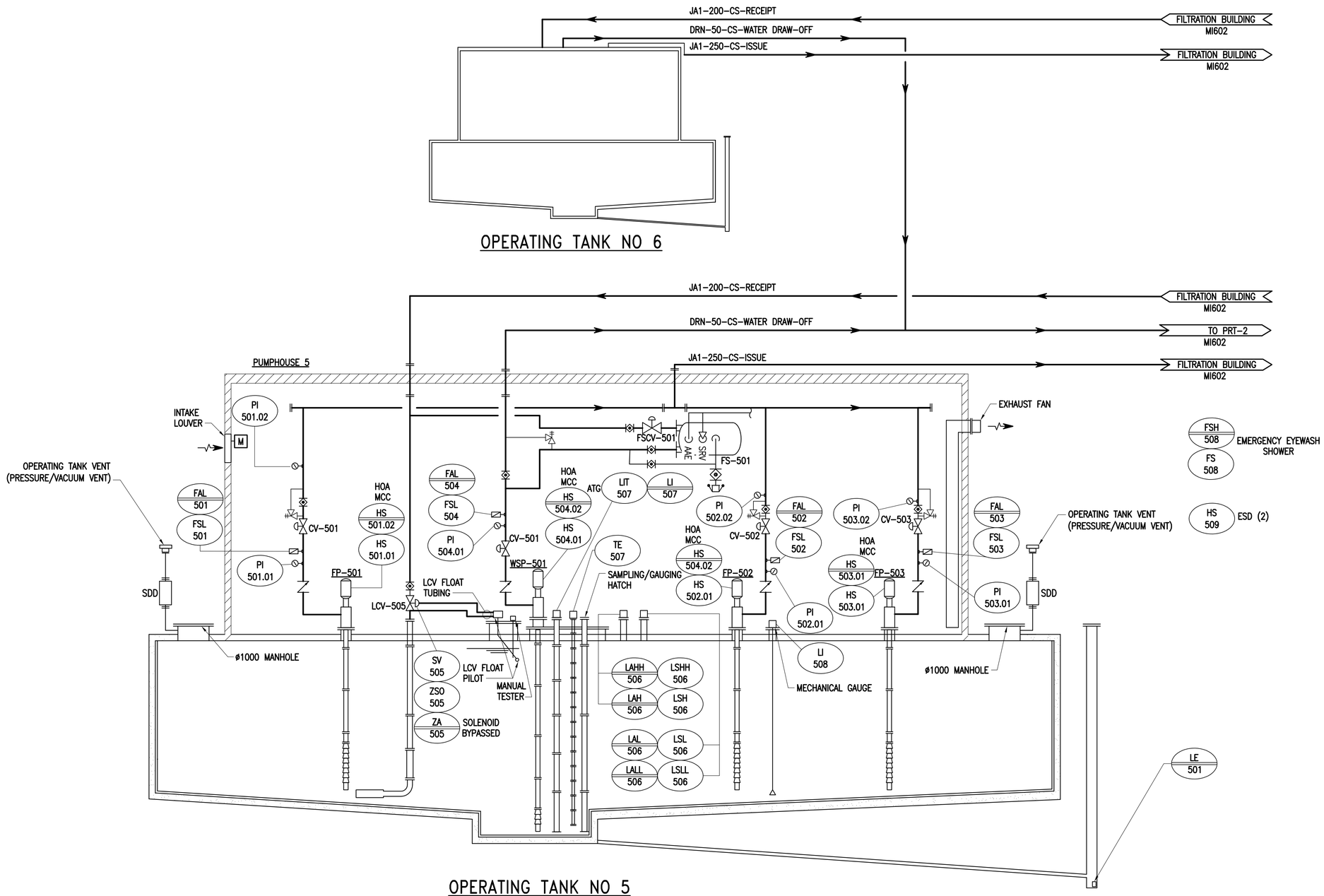

OPERATING TANKS NO 5 & NO 6 DIAGRAM

SCALE: NONE

SYM	DESCRIPTION	DATE	APPR

NAVFAC

COMMONWEALTH OF VIRGINIA
DONALD W. NODES
Lic. No.037747
05/04/16
PROFESSIONAL ENGINEER
SEAL

Austin Brockenbrough
ENGINEERING • CONSULTING
A/E INFO

APPROVED
FOR COMMANDER NAVFAC 5/16/2016

ACTIVITY
APPROVED BY ANDREA LEMON VIA EMAIL

SATISFACTORY TO DATE 4/4/16

DES DWN | DRW WMG | CHK WVB
PM/DM LET/RER
BRANCH MANAGER SLE
DESIGN DIRECTOR R.B. FITCH, III P.E.
FIRE PROTECTION

DEPARTMENT OF THE NAVY
NAVAL FACILITIES ENGINEERING COMMAND
LANT CAPITAL IMPROVEMENTS
CAMP LEMONNIER

NAVAL FACILITIES ENGINEERING COMMAND ATLANTIC
NORFOLK, VIRGINIA
DJIBOUTI AFRICA

DESC 1701/P-1701
CONSTRUCT FUEL STORAGE FACILITIES

FLOW DIAGRAM

SCALE: AS NOTED
EPROJECT NO.: 1344008
CONSTR. CONTR. NO. N62470-16-R-6004
NAVFAC DRAWING NO. 14047109
SHEET 145 OF 186

MI601

DRAWFORM REVISION: 10 MARCH 2009

FILE NAME: G:\14 Jobs\14-013 Djibouti - Fuel Storage Facility - NAVFAC LANT\CAD AutoCAD\MI\MI601 FLOW DIAGRAM.dwg LAYOUT NAME: FLOW DIAGRAM PLOTTED: Thursday, May 05, 2016 - 3:13pm USER: rhopkins

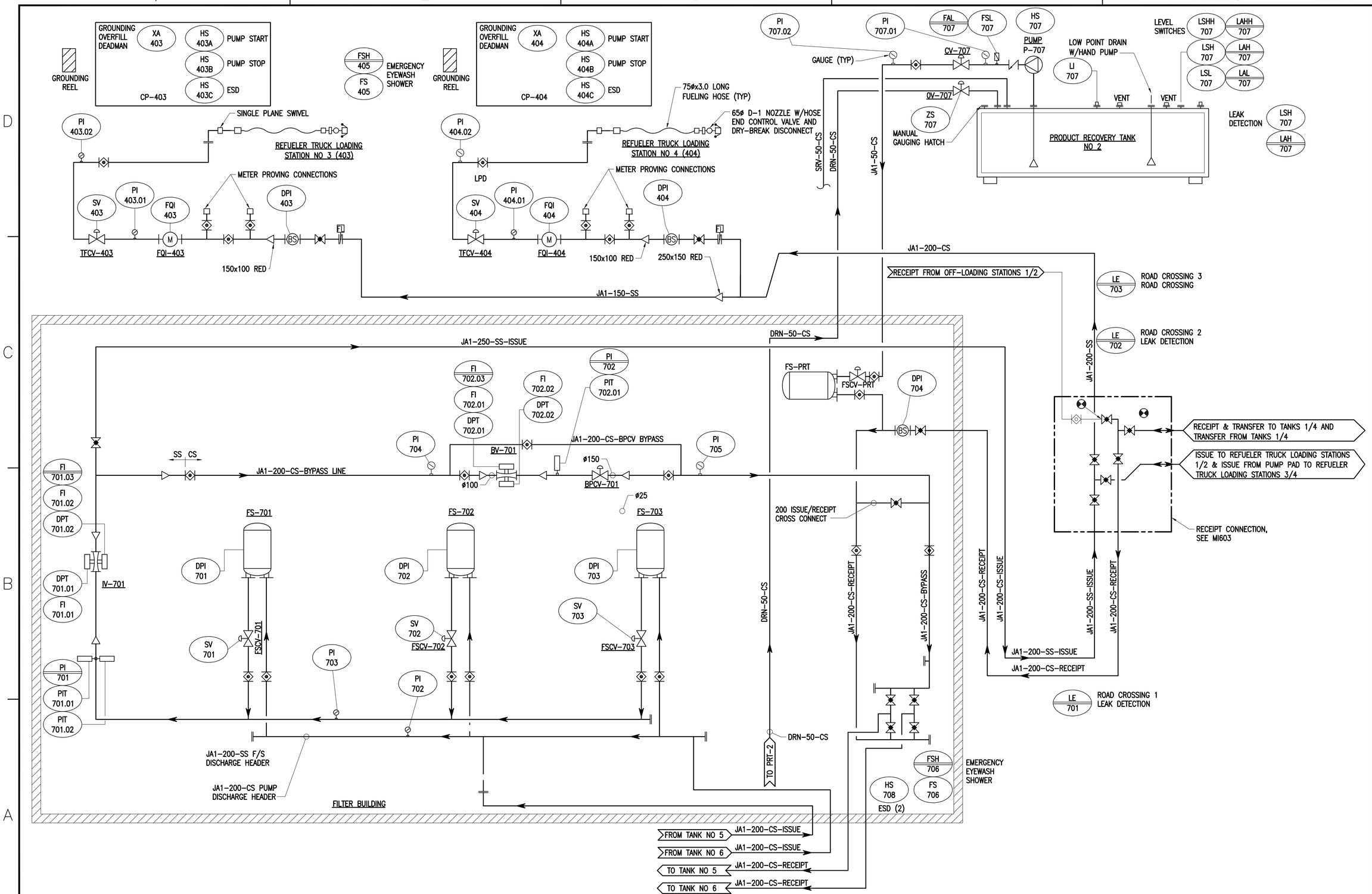

FILTER BLDG AND REFUELER TRUCK LOADING STATIONS NO 3-4 DIAGRAM

SCALE: NONE

SYM	DESCRIPTION	DATE	APPR

NAVFAC

COMMONWEALTH OF VIRGINIA
DONALD W. NODES
Lic. No.037747
05/04/16
PROFESSIONAL ENGINEER
SEAL

Austin Brockenbrough
ENGINEERING · CONSULTING
A/E INFO.

APPROVED: R. B. Fitch, III
FOR COMMANDER NAVFAC 5/16/2016

ACTIVITY
APPROVED BY ANDREA LEMON VIA EMAIL

SATISFACTORY TO DATE 4/4/16

DES DWN DRW WMG CHK WVB
PM/DM LET/RER
BRANCH MANAGER SLE
DESIGN DIRECTOR R.B. FITCH, III P.E.
FIRE PROTECTION MEPL

DEPARTMENT OF THE NAVY
NAVAL FACILITIES ENGINEERING COMMAND
LANT CAPITAL IMPROVEMENTS
CAMP LEMONNIER

NAVAL FACILITIES ENGINEERING COMMAND ATLANTIC
NORFOLK, VIRGINIA
DJIBOUTI AFRICA

DESC 1701/P-1701
CONSTRUCT FUEL STORAGE FACILITIES

FLOW DIAGRAM

SCALE: AS NOTED
EPROJECT NO.: 1344008
CONSTR. CONTR. NO. N62470-16-R-6004
NAVFAC DRAWING NO. 14047110
SHEET 146 OF 186

MI602

DRAWFORM REVISION: 10 MARCH 2009

FILE NAME: G:\14 Jobs\14-013 Djibouti - Fuel Storage Facility - NAVFAC LANT\CAD Auto\CAD\MI\MI602 FLOW DIAGRAM.dwg LAYOUT NAME: FLOW DIAGRAM PLOTTED: Thursday, May 05, 2016 - 3:13pm USER: rhopkins

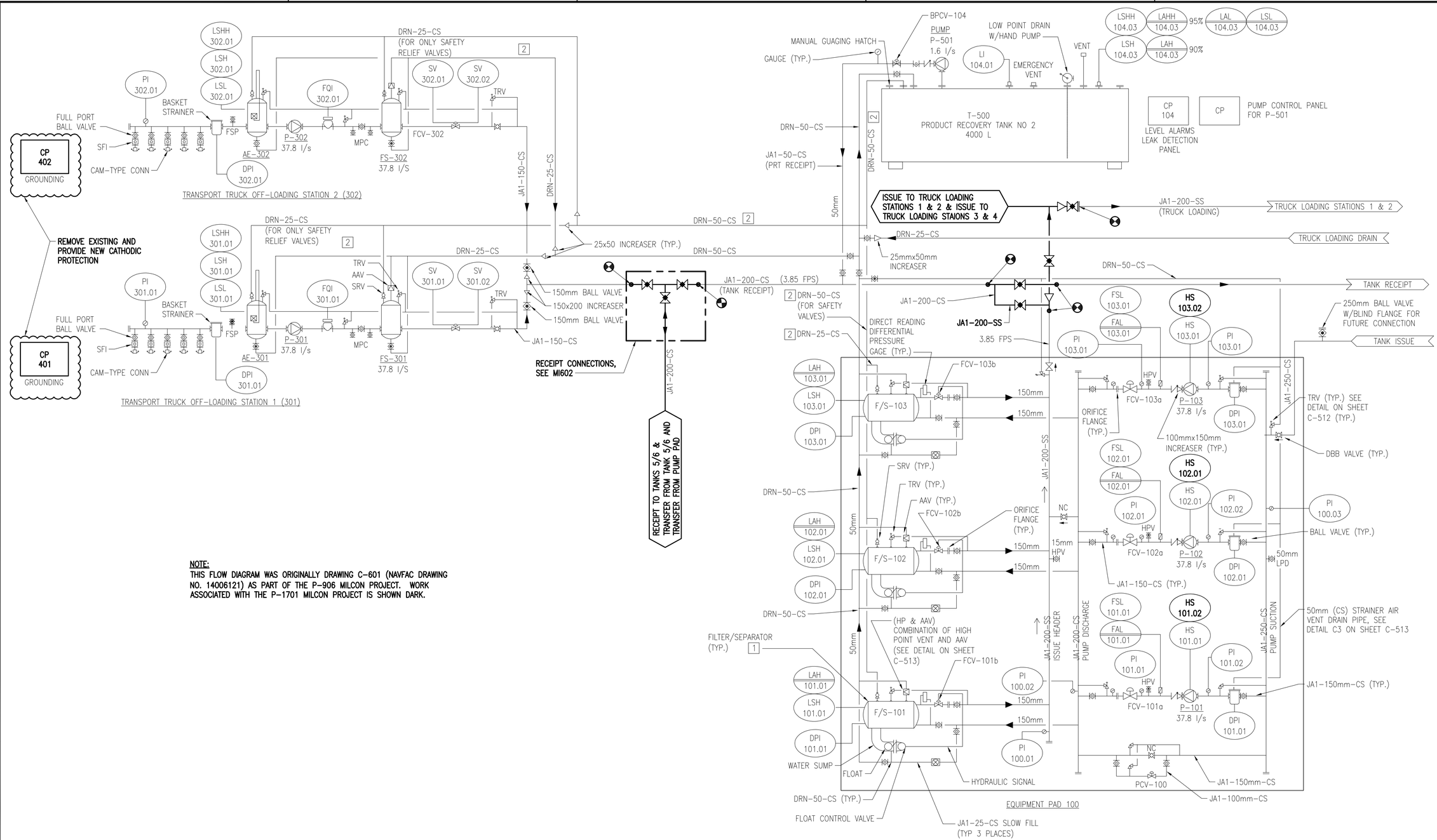

NOTE:
THIS FLOW DIAGRAM WAS ORIGINALLY DRAWING C-601 (NAVFAC DRAWING NO. 14006121) AS PART OF THE P-906 MILCON PROJECT. WORK ASSOCIATED WITH THE P-1701 MILCON PROJECT IS SHOWN DARK.

EXISTING FUEL FARM FLOW DIAGRAM

SCALE: NONE

SYM	DESCRIPTION	DATE	APPR

NAVFAC

COMMONWEALTH OF VIRGINIA — DONALD W. NODES — Lic. No.037747 — 05/04/16 — PROFESSIONAL ENGINEER — SEAL

Austin Brockenbrough — ENGINEERING · CONSULTING

A/E INFO

APPROVED — FOR COMMANDER NAVFAC 5/16/2016

ACTIVITY: APPROVED BY ANDREA LEMON VIA EMAIL

SATISFACTORY TO — DATE 4/4/16

DES DWN | DRW WMG | CHK WVB

PM/DM LET/RER

BRANCH MANAGER SLE

DESIGN DIRECTOR R.B. FITCH, III P.E.

FIRE PROTECTION MPR

DEPARTMENT OF THE NAVY
NAVAL FACILITIES ENGINEERING COMMAND
NAVAL FACILITIES ENGINEERING COMMAND ATLANTIC
NORFOLK, VIRGINIA
DJIBOUTI AFRICA
UNT CAPITAL IMPROVEMENTS
CAMP LEMONNIER

DESC 1701/P-1701
CONSTRUCT FUEL STORAGE FACILITIES

FLOW DIAGRAM

SCALE: AS NOTED
EPROJECT NO.: 1344008
CONSTR. CONTR. NO.: N62470-16-R-6004
NAVFAC DRAWING NO.: 14047111
SHEET 147 OF 186

MI603

DRAWFORM REVISION: 10 MARCH 2009

FILE NAME: G:\14 Jobs\14-013 Djibouti - Fuel Storage Facility - NAVFAC LANT\CAD AutoCAD\M\MI603 FLOW DIAGRAM.dwg LAYOUT NAME: FLOW DIAGRAM PLOTTED: Thursday, May 05, 2016 - 3:13pm USER: rhopkins

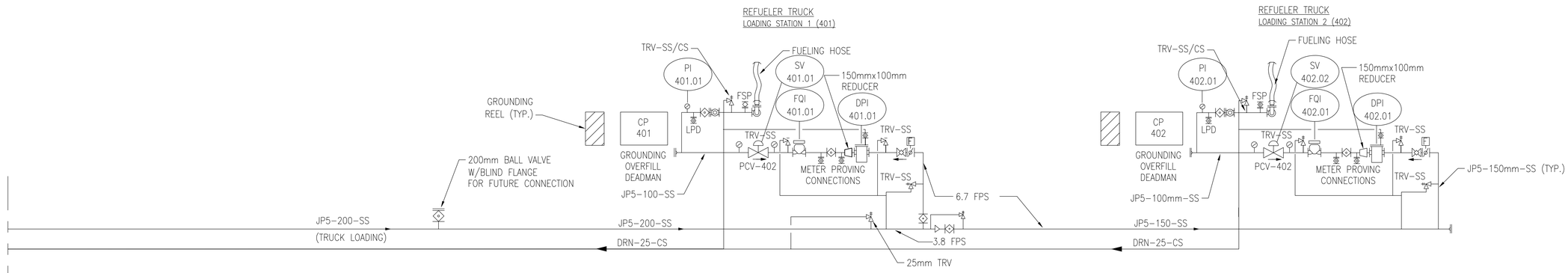

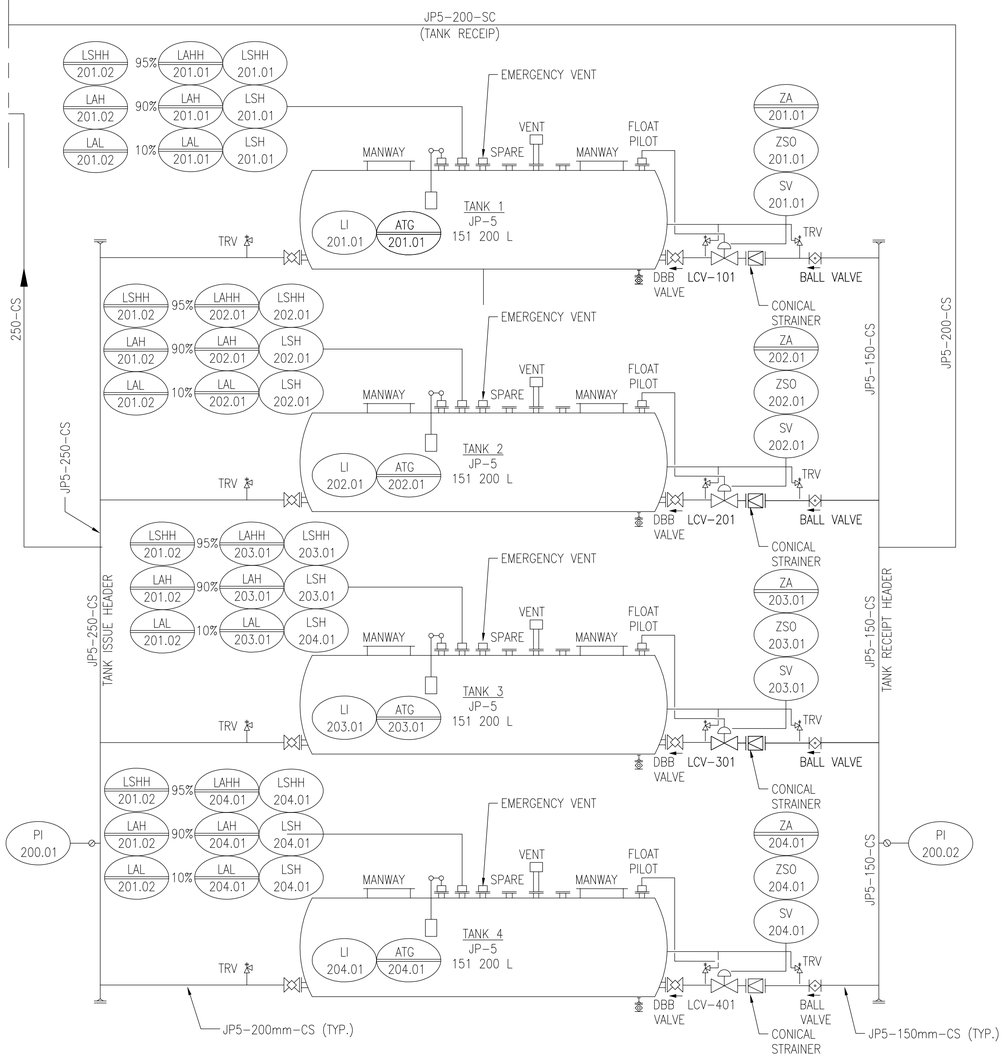

GENERAL NOTES:

1. REFER TO SHEET C-512 FOR THERMAL RELIEF VALVE PIPING.

NOTE:
THIS FLOW DIAGRAM WAS ORIGINALLY DRAWING C-601 (NAVFAC DRAWING NO. 14006121) AS PART OF THE P-906 MILCON PROJECT AND IS PROVIDED FOR REFERENCE ONLY.

THERE IS NO NEW WORK SHOWN ON THIS SHEET

FUEL FARM FLOW DIAGRAM

SCALE: NONE

SYM	DESCRIPTION	DATE	APPR

NAVFAC

COMMONWEALTH OF VIRGINIA
DONALD W. NODES
Lic. No.037747
05/04/16
PROFESSIONAL ENGINEER
SEAL

Austin Brockenbrough
ENGINEERING · CONSULTING
A/E INFO.

APPROVED: 5/16/2016
FOR COMMANDER NAVFAC

ACTIVITY
APPROVED BY ANDREA LEMON VIA EMAIL

SATISFACTORY TO DATE 4/4/16

DES DWN DRW WMG CHK WVB
PM/DM LET/RER
BRANCH MANAGER SLE
DESIGN DIRECTOR R.B. FITCH, III P.E.
FIRE PROTECTION

DEPARTMENT OF THE NAVY
NAVAL FACILITIES ENGINEERING COMMAND
LANT CAPITAL IMPROVEMENTS
CAMP LEMONNIER

NAVAL FACILITIES ENGINEERING COMMAND ATLANTIC
NORFOLK, VIRGINIA
DJIBOUTI AFRICA

DESC 1701/P-1701
CONSTRUCT FUEL STORAGE FACILITIES

FUEL FARM FLOW DIAGRAM

SCALE: AS NOTED
EPROJECT NO.: 1344008
CONSTR. CONTR. NO. N62470-16-R-6004
NAVFAC DRAWING NO. 14047112
SHEET 148 OF 186
MI604

DRAWFORM REVISION: 10 MARCH 2009

FILE NAME: G:\14 Jobs\14-013 Djibouti - Fuel Storage Facility - NAVFAC LANT\CAD AutoCAD\MI\MI604 FUEL FARM FLOW DIAGRAM.dwg LAYOUT NAME: FUEL FARM FLOW DIAGRAM PLOTTED: Thursday, May 05, 2016 - 3:13pm USER: rhopkins

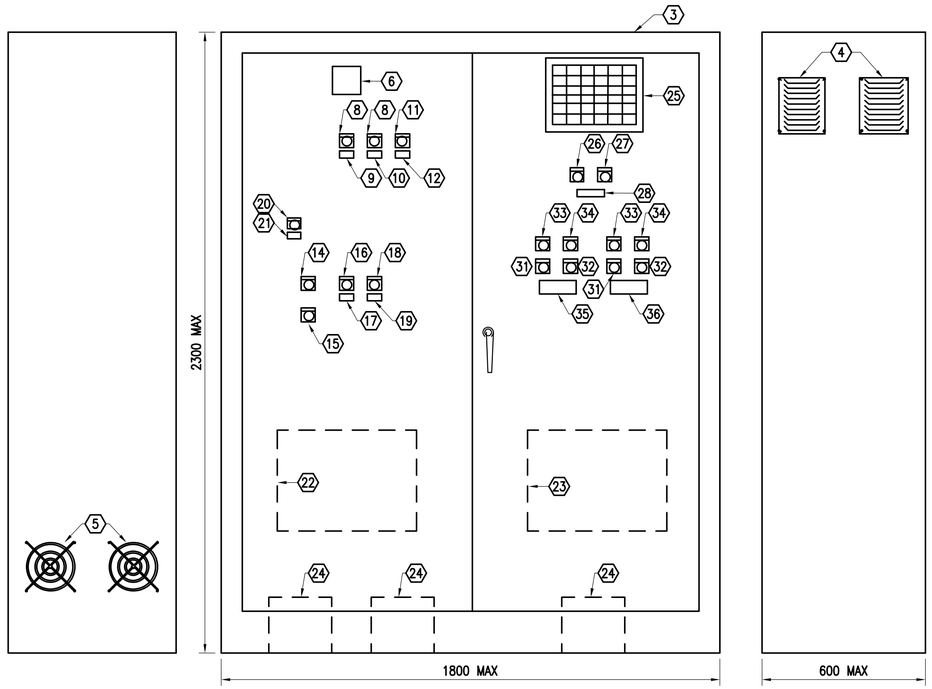

LEFT SIDE VIEW

FRONT VIEW

RIGHT SIDE VIEW

PUMP CONTROL PANEL (PCP)

SCALE: NONE

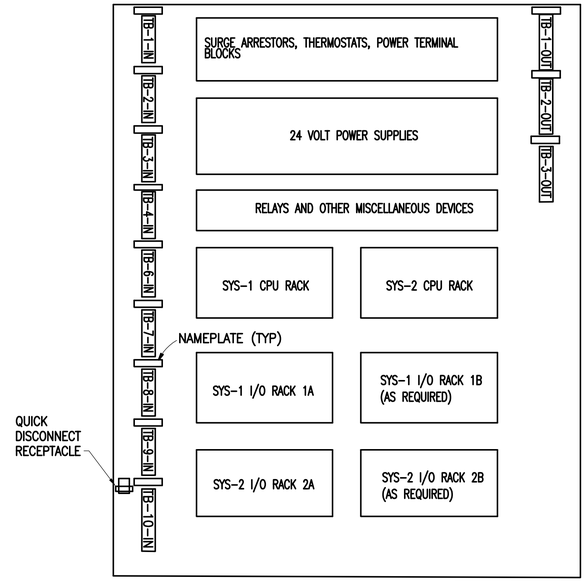

INTERIOR BACKPLAIN MOUNTING PANEL

SCALE: NONE

NOTES:

1. PROVIDE WIRE MANAGEMENT DUCTS.
2. FOLLOW THE ABOVE LAYOUT AS CLOSE AS POSSIBLE TO PROVIDE UNIFORMITY WITH EXISTING AND FUTURE FUELING SYSTEM CONTROL PANELS.

PUMP CONTROL PANEL LEGEND

ITEM	DESCRIPTION
1	LED DISPLAY PANEL (SEE SHEET MI606)
2	NOT USED
3	FREE STANDING ENCLOSURE
4	VENTS
5	FANS
6	VIBRATING ALARM HORN (70db at 3.048M)
7	NOT USED
8	GREEN INDICATOR LIGHT
9	NAMEPLATE "CPU-1 ON"
10	NAMEPLATE "CPU-2 ON"
11	WHITE INDICATOR LIGHT
12	NAMEPLATE "EMERGENCY CIRCUIT POWER ON"
13	NOT USED
14	RED JUMBO MUSHROOM MOMENTARY CONTACT PUSHBUTTON WITH LEGEND PLATE "EMERGENCY STOP"
15	MOMENTARY CONTACT PUSHBUTTON WITH LEGEND PLATE "EMERGENCY STOP RESET"

PUMP CONTROL PANEL LEGEND CONT

ITEM	DESCRIPTION
16	2 POSITION MAINTAINED CONTACT SELECTOR SWITCH WITH LEGEND PLATE "SYS-1 SYS-2"
17	NAMEPLATE "SYSTEM INPUT SELECT"
18	3 POSITION KEY OPERATED MAINTAINED CONTACT SELECTOR SWITCH WITH LEGEND PLATE "COMBINED OFF SEPARATE"
19	NAMEPLATE "FUELING MODE SELECT"
20	6 POSITION MAINTAINED CONTACT SELECTOR SWITCH WITH LEGEND PLATE "501 502 503 601 602 603" (CIRCULAR AROUND SWITCH)
21	NAMEPLATE "LEAD FUEL PUMP"
22	LOCKABLE CABINET LOCATED WITHIN THE PCP FOR THE LAPTOP COMPUTER.
23	CABINET WITHIN PCP FOR SPARE PARTS
24	UNINTERUPTABLE POWER SUPPLY (UPS) WITHIN CABINET
25	BACKLIGHT WINDOW ANNUNCIATOR, SEE SHEET EI601
26	MOMENTARY CONTACT PUSHBUTTON WITH LEGEND PLATE "TEST"
27	MOMENTARY CONTACT PUSHBUTTON WITH LEGEND PLATE "ACKNOWLEDGE"
28	NAMEPLATE "ANNUNCIATOR SYSTEM"
29	NOT USED
30	NOT USED

PUMP CONTROL PANEL LEGEND CONT

ITEM	DESCRIPTION
31	MOMENTARY CONTACT PUSHBUTTON WITH LEGEND PLATE "START"
32	MOMENTARY CONTACT PUSHBUTTON WITH LEGEND PLATE "STOP"
33	GREEN MINI-INDICATOR LIGHT WITH LEGEND PLATE "RUN"
34	RED MINI-INDICATOR LIGHT WITH LEGEND PLATE "STOP"
35	NAMEPLATE "WATER SUMP PUMP - WSP-501"
36	NAMEPLATE "WATER SUMP PUMP - WSP-601"

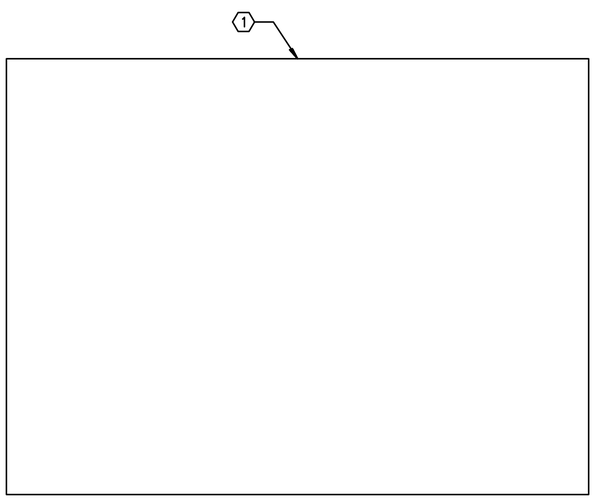

ANNUNCIATOR PANEL

SCALE: NONE

SYM	DESCRIPTION	DATE	APPR

NAVFAC

COMMONWEALTH OF VIRGINIA
DONALD W. NODES
Lic. No.037747
05/04/16
PROFESSIONAL ENGINEER
SEAL

Austin Brockenbrough
ENGINEERING • CONSULTING

A/E INFO

APPROVED
FOR COMMANDER NAVFAC 5/16/2016

ACTIVITY
APPROVED BY ANDREA LEMON VIA EMAIL

SATISFACTORY TO DATE 4/4/16

DES DWN | DRW WMG | CHK WVB

PM/DM LET/RER

BRANCH MANAGER SLE

DESIGN DIRECTOR R.B. FITCH, III P.E.

FIRE PROTECTION MFGL

DEPARTMENT OF THE NAVY
NAVAL FACILITIES ENGINEERING COMMAND
CAMP LEMONNIER
UNIT CAPITAL IMPROVEMENTS

NAVAL FACILITIES ENGINEERING COMMAND ATLANTIC
NORFOLK, VIRGINIA
DJIBOUTI AFRICA

DESC 1701/P-1701
CONSTRUCT FUEL STORAGE FACILITIES

PUMP CONTROL PANEL ELEVATION

SCALE: AS NOTED

EPROJECT NO.: 1344008

CONSTR. CONTR. NO.
N62470-16-R-6004

NAVFAC DRAWING NO.
14047113

SHEET 149 OF 186

MI605

DRAWFORM REVISION: 10 MARCH 2009

FILE NAME: G:\14 Jobs\14-013 Djibouti - Fuel Storage Facility - NAVFAC LANT\CAD AutoCAD\MY\MI605 PUMP CONTROL PANEL ELEVATION.dwg LAYOUT NAME: PUMP CONTROL PANEL ELEVATION PLOTTED: Thursday, May 05, 2016 - 3:14pm USER: rhopkins

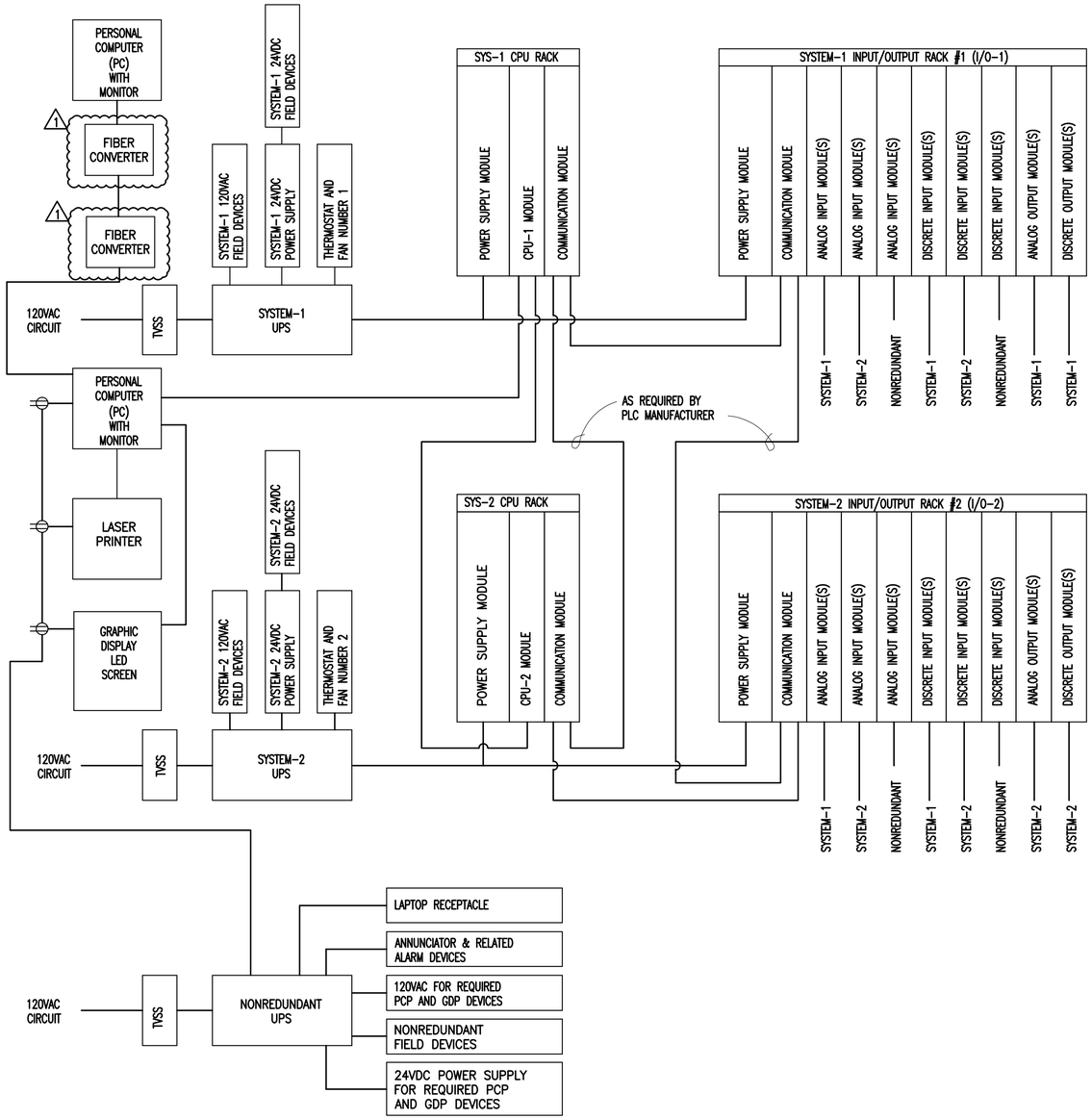

CONTROL SYSTEM BLOCK DIAGRAM

SCALE: NONE

OPERATING TANK T-5 HIGH-HIGH LEVEL (RED)	OPERATING TANK T-6 HIGH-HIGH LEVEL (RED)	TANK T-5 FUEL PUMP FP-501 FLOW FAILURE (WHITE)	TANK T-6 FUEL PUMP FP-601 FLOW FAILURE (WHITE)	EMERGENCY STOP (RED)	FILTER BUILDING EMERGENCY SHOWER ACTIVATED (WHITE)
OPERATING TANK T-5 HIGH LEVEL (WHITE)	OPERATING TANK T-6 HIGH LEVEL (WHITE)	TANK T-5 FUEL PUMP FP-502 FLOW FAILURE (WHITE)	TANK T-6 FUEL PUMP FP-602 FLOW FAILURE (WHITE)	SYSTEM-1 PLC FAILURE (WHITE)	PUMPHOUSE 5 EMERGENCY SHOWER ACTIVATED (WHITE)
OPERATING TANK T-5 LOW LEVEL (WHITE)	OPERATING TANK T-6 LOW LEVEL (WHITE)	TANK T-5 FUEL PUMP FP-503 FLOW FAILURE (WHITE)	TANK T-6 FUEL PUMP FP-603 FLOW FAILURE (WHITE)	SYSTEM-2 PLC FAILURE (WHITE)	PUMPHOUSE 6 EMERGENCY SHOWER ACTIVATED (WHITE)
OPERATING TANK T-5 LOW-LOW LEVEL (RED)	OPERATING TANK T-6 LOW-LOW LEVEL (RED)	TANK T-5 LEAK DETECTED (WHITE)	TANK T-6 LEAK DETECTED (WHITE)	SYSTEM-1 DATA FAILURE (WHITE)	TRUCK LOADING EMERGENCY SHOWER ACTIVATED (WHITE)
PRODUCT RECOVERY TANK HIGH-HIGH LEVEL (RED)	PRODUCT RECOVERY TANK LEAK DETECTED (WHITE)	ROAD CROSSING #1 LEAK DETECTED (WHITE)	ROAD CROSSING #2 LEAK DETECTED (WHITE)	SYSTEM-2 DATA FAILURE (WHITE)	SPARE (WHITE)
PRODUCT RECOVERY TANK HIGH LEVEL (WHITE)	PRODUCT RECOVERY TANK OVERFILL VALVE CLOSED (WHITE)	PRODUCT RECOVERY TANK FLOW FAILURE (WHITE)	ROAD CROSSING #3 LEAK DETECTED (WHITE)	PCP HIGH TEMPERATURE (WHITE)	SPARE (WHITE)

ANNUNCIATOR PANEL LAYOUT

SCALE: NONE

NOTES:

1. (WHITE) – WHITE WINDOW WITH BLACK LETTERS.
2. (RED) – RED WINDOW WITH WHITE LETTERS.
3. RED WINDOW ALARMS (CRITICAL) SHALL SOUND THE EXTERIOR RESONATING HORN AND PUMP CONTROL PANEL HORN. THE WHITE WINDOW ALARMS (NON-CRITICAL) SHALL SOUND THE EXTERIOR VIBRATING HORN AND THE PUMP CONTROL PANEL HORN.
4. CRITICAL ALARMS SHALL STOP ALL PUMPS RUNNING IN AUTOMATIC MODE.

SYM	DESCRIPTION	DATE	APPR
1	REMOVED MODEMS	4/29/16	

NAVFAC

COMMONWEALTH OF VIRGINIA
DONALD W. NODES
Lic. No.037747
05/04/16
PROFESSIONAL ENGINEER
SEAL

Austin Brockenbrough
ENGINEERING • CONSULTING

A/E INFO.

APPROVED: R. B. Fitch, III
FOR COMMANDER NAVFAC 5/16/2016

ACTIVITY
APPROVED BY ANDREA LEMON VIA EMAIL

SATISFACTORY TO DATE 4/4/16

DES DWN DRW WMG CHK WVB
PM/DM LET/RER
BRANCH MANAGER SLE
DESIGN DIRECTOR R.B. FITCH, III P.E.
FIRE PROTECTION MPR

DEPARTMENT OF THE NAVY
NAVAL FACILITIES ENGINEERING COMMAND
LANT CAPITAL IMPROVEMENTS
NAVAL FACILITIES ENGINEERING COMMAND ATLANTIC
NORFOLK, VIRGINIA
CAMP LEMONNIER
DJIBOUTI AFRICA

DESC 1701/P-1701
CONSTRUCT FUEL STORAGE FACILITIES

CONTROL SYSTEM DIAGRAMS

SCALE: AS NOTED
EPROJECT NO.: 1344008
CONSTR. CONTR. NO.
N62470-16-R-6004
NAVFAC DRAWING NO.
14047114
SHEET 150 OF 186

MI606

DRAWFORM REVISION: 10 MARCH 2009

FILE NAME: G:\14 Jobs\14-013 Djibouti – Fuel Storage Facility – NAVFAC LANT\CAD AutoCAD\MI\MI606 CONTROL system diagrams.dwg LAYOUT NAME: CONTROL SYSTEM DIAGRAMS PLOTTED: Thursday, May 05, 2016 – 3:14pm USER: rhopkins