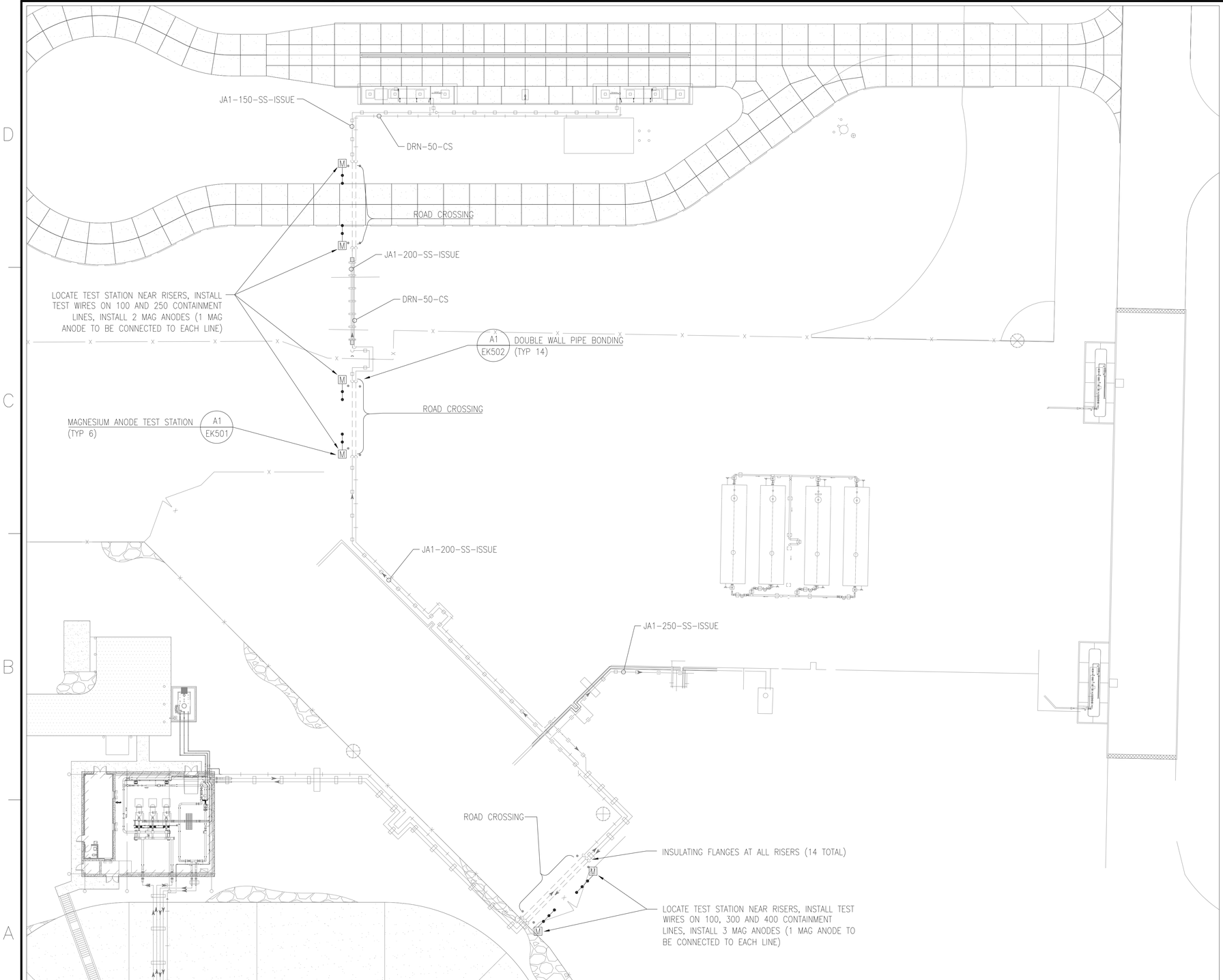

PLAN NORTH

CATHODIC PROTECTION PLAN

SCALE: 1:300

NOTES:

1. FOR ADDITIONAL LEGEND AND ABBREVIATIONS, SEE DRAWINGS C-001, S-001, E-001 & M-001.
2. ALL BURIED FUEL PIPING SHALL BE ELECTRICALLY ISOLATED FROM ALL FOREIGN METALLIC STRUCTURES WITH INSULATING FLANGES/UNIONS. SEE INSULATING FLANGE DETAIL C1 / EK502. REFER TO MECHANICAL DRAWINGS FOR INSULATING FLANGE/UNION LOCATIONS.
3. ALL NEW BURIED FUEL CONTAINMENT PIPING SHALL NE BONDED TO THE FUEL CARRIER PIPING AT EACH RISER. SEE DOUBLE WALL PIPE BONDING DETAIL A1 / EK502.

LEGEND – CATHODIC PROTECTION

R	RECTIFIER
J	JUNCTION BOX
M	MAGNESIUM ANODE TEST STATION
C	CASING TEST STATION
#4	PERMANENT REFERENCE ELECTRODE
	NEW CATHODIC CABLE OR CONDUIT
	EXISTING CATHODIC CABLE OR CONDUIT
	MAGNESIUM ANODE
IF	DIELECTRIC INSULATING FLANGE
IU	DIELECTRIC INSULATING UNION
TYP	TYPICAL
C	CONDUIT
TW	POLYVINYL-CHLORIDE CABLE INSULATION
RHW	CROSS-LINKED POLYETHYLENE CABLE INSULATION
HMWPE	HIGH MOLECULAR WEIGHT POLYETHYLENE CABLE INSULATION
THWN	THERMOPLASTIC CABLE INSULATION, MOISTURE AND HEAT RESISTANT
DIA	DIAMETER
W/	WITH
MAG	MAGNESIUM

GRAPHIC SCALE(S):

1:300 0 10.00 20.00 30.00 m

SYM	DESCRIPTION	DATE	APPR

NAVFAC

STATE OF MICHIGAN
JASON M. KADLEC
ENGINEER
No. 54738
5-6-16
LICENSED PROFESSIONAL ENGINEER
SEAL

KACE
KADLEC ASSOCIATES
CORROSION ENGINEERS
P.O. BOX 1249
TRAVERSE CITY, MI 49685
PH 231-946-1970
FX 231-946-1972
WWW.KADLECASSOCIATES.COM E INFO@KADLECASSOCIATES.COM

Austin Brockenbrough
ENGINEERING • CONSULTING

A/E INFO

APPROVED
FOR COMMANDER NAVFAC 5/16/2016

ACTIVITY
APPROVED BY ANDREA LEMON VIA EMAIL

SATISFACTORY TO DATE 4/4/16

DES JMK DRW JMK CHK DET

PM/DM LET/RER

BRANCH MANAGER RLD

DESIGN DIRECTOR R.B. FITCH, III P.E.

FIRE PROTECTION MJL

DEPARTMENT OF THE NAVY
NAVAL FACILITIES ENGINEERING COMMAND
NAVAL FACILITIES ENGINEERING COMMAND ATLANTIC
NORFOLK, VIRGINIA
LANT CAPITAL IMPROVEMENTS

CAMP LEMONNIER
DJIBOUTI AFRICA

DESC 1701/P-1701
CONSTRUCT FUEL STORAGE FACILITIES

CATHODIC PROTECTION PLAN

SCALE: AS NOTED
EPROJECT NO.: 1344008
CONSTR. CONTR. NO. N62470-16-R-6004
NAVFAC DRAWING NO. 14047148
SHEET 184 OF 186

EK101

DRAWFORM REVISION: 10 MARCH 2009

FILE NAME: C:\Users\Jason\Documents\kace\014 2014 jobs\1457 - aba camp lemonier (djibouti) design\100% sub 050416 mod title block\dwgs\EK\EK101 CP PLAN.dwg LAYOUT NAME: CP PLAN PLOTTED: Wednesday, May 04, 2016 - 9:58am USER: Jason

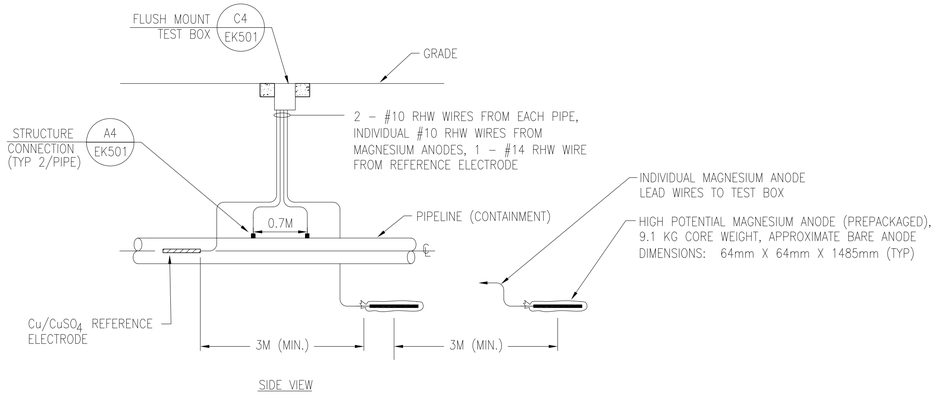

SIDE VIEW

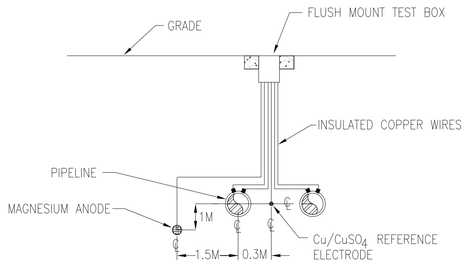

SECTION VIEW

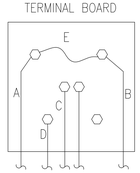

WIRE	GAUGE	INSULATION	CONNECTION
A	#10	RHW/BLACK	ANODE
B	#10	RHW/WHITE	400 CS FUEL
C	#10	RHW/WHITE	400 CS FUEL
D	#14	RHW/YELLOW	REF. ELECT.
E	#10	RHW/WHITE	JUMPER

NOTES:

1. LABEL ALL WIRES/CABLES WITH PERMANENT TAGS. LABEL AS SHOWN IN "CONNECTION" COLUMN ABOVE.
2. DO NOT BOND ANODES TO PIPELINE. CORROSION ENGINEER WILL BOND ANODES TO PIPELINE AFTER NATIVE STATE SURVEY HAS BEEN COMPLETED.

WIRING SCHEDULE

NOTES:

1. SEE CATHODIC PROTECTION PLAN FOR NUMBER OF ANODES AT EACH TEST STATION LOCATION.
2. DO NOT BOND ANODES TO PIPELINE. CORROSION ENGINEER WILL BOND ANODES TO PIPELINE AFTER NATIVE STATE SURVEY HAS BEEN COMPLETED.
3. BOTTOM OF TEST STATION SHALL EXTEND INTO NATIVE SOIL. DO NOT FILL BOTTOM OF TEST STATION WITH CONCRETE.
4. IF TEST STATION IS LOCATED IN GRASS/SOIL AREA SET TEST STATION IN CONCRETE PAD (610 X 610 X 100 THICK MINIMUM).
5. INSTALL 2 TEST WIRES ON EACH PIPE AT EACH TEST STATION LOCATION. SEE CATHODIC PROTECTION PLAN FOR NUMBER OF PIPES AT EACH TEST STATION LOCATION.
6. CENTER REFERENCE ELECTRODE BETWEEN PIPELINES IF THERE ARE 2 PIPELINES AT MAGNESIUM ANODE TEST STATION LOCATION.
7. PROVIDE 1 TEST BOARD PER PIPE AT EACH TEST STATION AS REQUIRED (OR IF THERE ARE AN EXCESSIVE NUMBER OF TEST WIRES).

A1 MAGNESIUM ANODE TEST STATION

SCALE: NONE

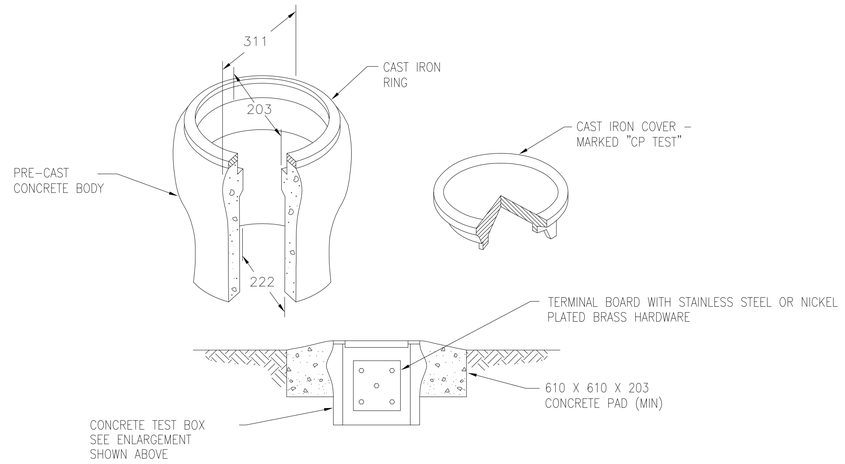

NOTES:

1. PROVIDE FLUSH MOUNT TEST STATIONS IN CONJUNCTION WITH NEW CONCRETE INSTALLATION. BOTTOM OF TEST STATION SHALL EXTEND INTO NATIVE SOIL. DO NOT FILL BOTTOM OF TEST STATION WITH CONCRETE OR OTHER DEBRIS.
2. ALL WIRING SHALL BE OF SUFFICIENT LENGTH TO EXTEND 610 MIN ABOVE FINISHED GRADE.
3. PROVIDE PERMANENT TAGS TO IDENTIFY EACH CABLE: "REFERENCE ELECTRODE, CS RETURN, CS SUPPLY, TRANSFER PIPE, MAG ANODE"
4. PROVIDE 1 TEST BOARD PER PIPE AT EACH TEST STATION AS REQUIRED (OR LARGER TEST BOARD) AT LOCATIONS WITH MULTIPLE PIPES AND / OR MULTIPLE MAGNESIUM ANODE BANKS.

C4 FLUSH MOUNT TEST BOX

SCALE: NONE

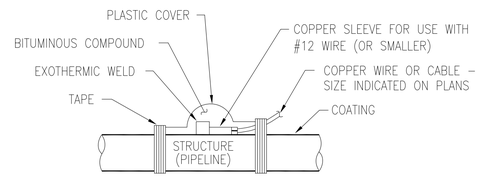

NOTES:

1. BOLTED CONNECTION MAY BE USED IN LIEU OF EXOTHERMIC WELD FOR ABOVE GRADE CONNECTIONS ONLY.
2. REMOVE TANK OR PIPE COATING FOR APPROXIMATELY 20 SQUARE CENTIMETERS. TANK OR PIPE SURFACE TO BE CLEAN, BRIGHT, AND DRY. USE FILE.
3. EXOTHERMIC WELD TO STRUCTURE, 15 GRAM CHARGE MAXIMUM.
4. REMOVE SLAG AND CLEAN WELD AREA WITH DENATURED ALCOHOL. COAT EXPOSED COPPER AND STEEL WITH APPROVED PAINT COATING FOR TANK/PIPELINE EXTERIOR.

A4 STRUCTURE CONNECTION

SCALE: NONE

APPR | DATE | DESCRIPTION | SYM

NAVFAC

STATE OF MICHIGAN
JASON M. KACE
ENGINEER
No. 54738
5-6-16
LICENSED PROFESSIONAL ENGINEER
SEAL

KACE
KACE ENGINEERING CORROSION ENGINEERS
P.O. BOX 1245
MARQUETTE, MI 49855
PH 906-942-0870
WWW.KACEASSOCIATES.COM I INFO@KACEASSOCIATES.COM

Austin Brockenbrough
ENGINEERING • CONSULTING

A/E INFO

APPROVED
FOR COMMANDER NAVFAC 5/16/2016
ACTIVITY
APPROVED BY ANDREA LEMON VIA EMAIL
SATISFACTORY TO DATE 4/4/16
DES JMK | DRW JMK | CHK DET
PM/DM LET/RER
BRANCH MANAGER RKD
DESIGN DIRECTOR R.B. FITCH, III P.E.
FIRE PROTECTION MFH

DEPARTMENT OF THE NAVY
NAVAL FACILITIES ENGINEERING COMMAND
NAVAL FACILITIES ENGINEERING COMMAND ATLANTIC
NORFOLK, VIRGINIA
DJIBOUTI, AFRICA
LANT CAPITAL IMPROVEMENTS
CAMP LEMONNIER
DESC 1701/P-1701
CONSTRUCT FUEL STORAGE FACILITIES
CATHODIC PROTECTION DETAILS

SCALE: AS NOTED
EPROJECT NO.: 1344008
CONSTR. CONTR. NO.
N62470-16-R-6004
NAVFAC DRAWING NO.
12027149
SHEET 185 OF 186

EK501

DRAWFORM REVISION: 10 MARCH 2009

FILE NAME: C:\Users\jason\Documents\Vaxe\014 2014 jobs\1457 - dbo comp lemonier (djibouti) design\100% sub 050416 mod title block\dwgs\EK\EK501 CP DETAILS.dwg LAYOUT NAME: EK-501 CP DETAILS PLOTTED: Wednesday, May 04, 2016 – 9:59am USER: Jason

Xref .\14-013 PE Stamps.dwg

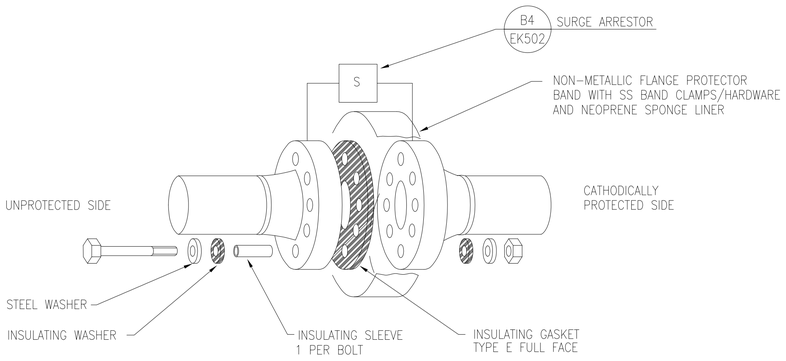

NOTES:

1. TEST EACH FLANGE WITH CERTIFIED FLANGE INSULATION TESTER. SUBMIT REPORT TO CONTRACTING OFFICER. SEE SPECIFICATIONS.
2. SEE MECHANICAL DRAWINGS FOR INSULATING FLANGE LOCATIONS.

C1 INSULATING FLANGE

SCALE: NONE

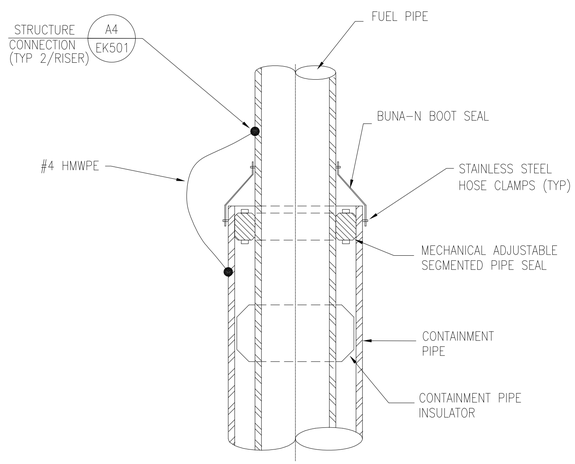

NOTES:

1. INSTALL BOND CABLE AT ALL NEW WORK PIPE RISERS (14 TOTAL).

A1 DOUBLE WALL PIPE BONDING

SCALE: NONE

SURGE ARRESTOR
AC FAULT RATING: 3.7kA RMS AT 30 CYCLES 60 Hz
LIGHTNING RATING: 100kA PEAK, 8X20 MICROSECOND WAVEFORM
THRESHOLD VOLTAGE: -3/+1 VOLTS PEAK
UL LISTED, CLASS 1, DIV 1 AND 2, GROUPS B, C, AND D

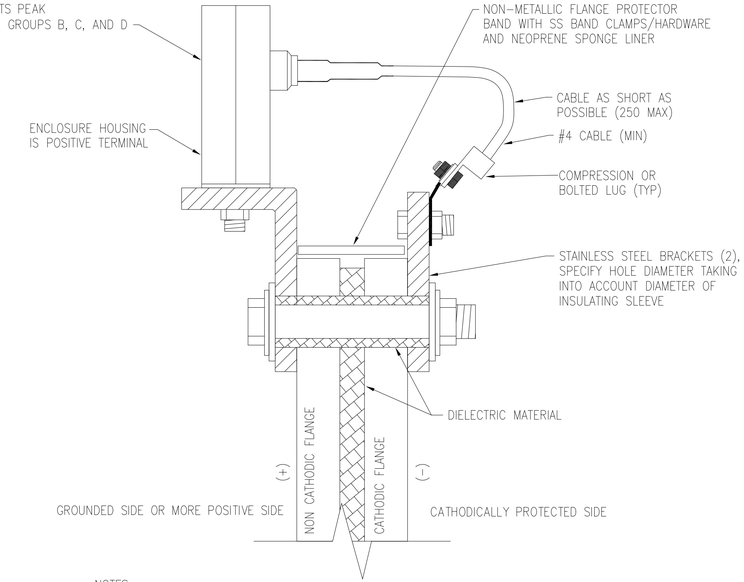

NOTES:

1. GRIND FLANGE TO BARE METAL. APPLY CORROSION INHIBITOR TO ALL CONTACT POINTS BETWEEN BRACKET, LUGS, CABLE, AND BOLTS.
2. INSTALL SURGE DEVICE USING CORRECT POLARITY AS SPECIFIED BY MANUFACTURER.

B4 SURGE ARRESTOR

SCALE: NONE

NAVFAC

STATE OF MICHIGAN
JASON M. KADLEC
ENGINEER
No. 54738
5-6-16
LICENSED PROFESSIONAL ENGINEER
SEAL

KACE
KADLEC ASSOCIATES
CORROSION ENGINEERS
P. O. BOX 1248
TRAVERSE CITY, MI 49685
PH 231-941-4972
FX 231-941-5972
WWW.KADLECASSOCIATES.COM E INFO@KADLECASSOCIATES.COM

Austin Brockenbrough
ENGINEERING • CONSULTING
A/E INFO

APPROVED
FOR COMMANDER NAVFAC 5/16/2016
ACTIVITY
APPROVED BY ANDREA LEMON VIA EMAIL
SATISFACTORY TO DATE 4/4/16
DES JMK DRW JMK CHK DET
PM/DM LET/RER
BRANCH MANAGER RLD
DESIGN DIRECTOR R.B. FITCH, III P.E.
FIRE PROTECTION MJU

DEPARTMENT OF THE NAVY
NAVAL FACILITIES ENGINEERING COMMAND
NAVAL FACILITIES ENGINEERING COMMAND ATLANTIC
NORFOLK, VIRGINIA
LANT CAPITAL IMPROVEMENTS
CAMP LEMONNIER
DJIBOUTI AFRICA

DESC 1701/P-1701
CONSTRUCT FUEL STORAGE FACILITIES

CATHODIC PROTECTION DETAILS

SCALE: AS NOTED
EPROJECT NO.: 1344008
CONSTR. CONTR. NO. N62470-16-R-6004
NAVFAC DRAWING NO. 14047150
SHEET 186 OF 186
EK502

DRAWFORM REVISION: 10 MARCH 2009

FILE NAME: C:\Users\Jason\Documents\kace\014 2014 jobs\1457 - aba camp lemonier (djibouti) design\100% sub 050416 mod title block\dwgs\EK\EK502 CP DETAILS.dwg LAYOUT NAME: EK-502 CP DETAILS PLOTTED: Wednesday, May 04, 2016 - 10:00am USER: Jason

Xref .\14-013 PE Stamps.dwg