STRUCTURAL ABBREVIATIONS

ACI	AMERICAN CONCRETE INSTITUTE	IBC	INTERNATIONAL BUILDING CODE
AFF	ABOVE FINISHED FLOOR	ID	INSIDE DIAMETER
AISC	AMERICAN INSTITUTE FOR STEEL CONSTRUCTION	INV	INVERSE
API	AMERICAN PETROLEUM INSTITUTE	JT	JOINT
ARCH	ARCHITECTURAL	Km/H	KILOMETER PER HOUR
ASCE	AMERICAN SOCIETY OF CIVIL ENGINEERS	kPa	KILOPASCAL
ASTM	AMERICAN SOCIETY FOR TESTING AND MATERIALS	LLV	LONG LEG VERTICAL
BLDG	BUILDING	MECH	MECHANICAL
CI	CAST IRON	MFG	MANUFACTURER
CJ	CONTROL JOINT	MIN	MINIMUM
CLEAR, CLR	CLEARANCE	MPa	MEGAPASCAL
CMU	CONCRETE MASONRY UNIT	MSL	MEAN SEA LEVEL
COL	COLUMN	NTS	NOT TO SCALE
CONC	CONCRETE	OC	ON CENTER
CONT	CONTINUOUS	OD	OUTSIDE DIAMETER
CS	CARBON STEEL	R	RADIUS
CTRD	CENTERED	REINF	REINFORCEMENT
DIA	DIAMETER	REQD	REQUIRED
DO	DECK OVER	SCH	SCHEDULE
DWG	DRAWING	SPA	SPACE
EA	EACH	SQ	SQUARE
EJ	EXPANSION JOINT	STD	STANDARD
EL/ELEV	ELEVATION	TOC	TOP OF CONCRETE
EMBED	EMBEDMENT	TYP	TYPICAL
EQ	EQUAL	UFC	UNIFIED FACILITIES CRITERIA
EW	EACH WAY	UON	UNLESS OTHERWISE NOTED
EXIST	EXISTING	VERT	VERTICAL
EXP	EXPANSION	WJ	WALL JOINT
FIN	FINISH	WWF	WELDED WIRE FABRIC
FL	FLOOR	XS	EXTRA STRONG
FML	FLEXIBLE MEMBRANE LINER	°	DEGREES
g	GRAVITY	@	AT
GA	GAGE	ø	DIAMETER
GALV	GALVANIZED	#	NUMBER
HORZ	HORIZONTAL	℄	CENTERLINE
h	HOUR	ℙ	PLATE
HS	HIGH STRENGTH		

STRUCTURAL LEGEND

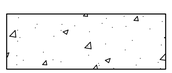

CAST-IN-PLACE CONCRETE (SECTION)

STEEL PLATE

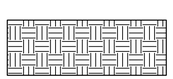

COMPACTED FILL

CAST-IN-PLACE CONCRETE (PLAN)
SAND FILL/GROUT (SECTION)

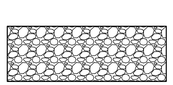

GRADED CRUSHED AGGREGATE BASE COURSE

GENERAL STRUCTURAL NOTES

1. ALL WORK TO BE DONE IN ACCORDANCE WITH INTERNATIONAL BUILDING CODE (IBC) 2012, AS REFERENCED AND MODIFIED BY THE UNIFIED FACILITIES CRITERIA (UFC) 3-310-01 "STRUCTURAL ENGINEERING" AND THE AMERICAN SOCIETY OF CIVIL ENGINEERS STANDARD 7 (ASCE 7) "MINIMUM DESIGN LOADS FOR BUILDINGS AND OTHER STRUCTURES", 2010 EDITION, AND API 650 11TH EDITION APPENDIX E.

2. LOADS

A. ROOF LIVE LOAD	
a. FUEL TANK	1.20 kPa
b. BUILDING	0.96 kPa
B. SNOW LOADS	
a. GROUND SNOW LOAD, Pg	0 kPa
b. AT ROOF SNOW LOAD, Pf	0 kPa
D. WIND LOADS	
a. BASIC WIND SPEED (3-SECOND GUST)	197 Km/h
b. WIND IMPORTANCE FACTOR, I_W	1.0
c. RISK CATEGORY	III
d. WIND EXPOSURE	C
E. SEISMIC DESIGN DATA	
a. MAPPED SPECTRAL RESPONSE ACCEL, S_S	1.02 (%g)
b. MAPPED SPECTRAL RESPONSE ACCEL, S_1	0.41 (%g)
c. DESIGN SPECTRAL RESPONSE ACCEL, S_{DS}	0.68 (%g)
d. DESIGN SPECTRAL RESPONSE ACCEL, S_{D1}	0.38 (%g)
e. SITE CLASS	C
f. SEISMIC USE GROUP (TANK ONLY)	II
g. SEISMIC DESIGN CATEGORY (BUILDING)	D
h. SEISMIC IMPORTANCE FACTOR, I_E (BUILDING & TANK)	1.25

3. ALL CONCRETE WORK SHALL CONFORM TO ALL REQUIREMENTS ACI 318-11 "BUILDING CODE REQUIREMENTS FOR STRUCTURAL CONCRETE".

CONCRETE COMPRESSIVE STRENGTH	27.6-34.5 MPa (LOCATION DEPENDENT)
REINFORCING STEEL	ASTM A615 GRADE 60
WELDED WIRE FABRIC	ASTM A185

4. ALL STRUCTURAL STEEL WORK SHALL CONFORM TO THE REQUIREMENTS OF AISC "SPECIFICATIONS FOR STRUCTURAL STEEL BUILDINGS ALLOWABLE STRENGTH AND PLASTIC DESIGN" DATED MARCH 9, 2005.

STRUCTURAL STEEL	ASTM A36 (MIN)
WIDE FLANGE BEAMS	ASTM A992
HIGH STRENGTH BOLTS	ASTM A325
ANCHOR BOLTS	ASTM A307
WELDING ELECTRODES	E70XX SERIES

ALL STRUCTURAL STEEL, INCLUDING BEAMS, CHAMFERS, ANGLES, PLATES, BOLTS, NUTS AND WASHERS, ETC, SHALL BE HOT DIPPED GALVANIZED AFTER FABRICATION.

5. ALL STAIRS AND PLATFORMS SHALL BE CONSTRUCTED WITH STRUCTURAL STEEL AND STEEL GRATINGS. DESIGN SHALL BE IN ACCORDANCE WITH ASCE 7 (LOADS) AND OSHA STANDARDS. HANDRAILS AND GUARDRAILS SHALL BE CONSTRUCTED WITH ø37 (ø47 OD) STANDARD PIPE. THESE STRUCTURES SHALL BE PROPERLY BRACED AND ANCHORED FOR STABILITY. ALL STEEL SHALL BE HOT DIPPED GALVANIZED COATED.

6. FOUNDATIONS FOR THIS PROJECT ARE CONCRETE SPREAD AND CONTINUOUS WALL FOOTINGS. CONCRETE MAT FOUNDATIONS LOCATED UNDER THE FUEL TANKS ARE SUPPORTED ON VIRGIN SOIL. A GEOTECHNICAL INVESTIGATION AND REPORT DATED JUNE 13, 2014 DEVELOPED BY ISM SERVICES, INC AND REVIEWED BY FROEHLING & ROBERTSON, INC (PROJECT NO. 61S-0016) IS INCLUDED WITH THESE DOCUMENTS. ALLOWABLE SOIL BEARING PRESSURE AT THE SITE IS 145 kPa. SOIL CORROSION POTENTIAL IS AN ISSUE AT THE SITE, AND LEAD TO HIGHER STRENGTH CONCRETE BEING SPECIFIED.

PRE-ENGINEERED METAL BUILDING NOTES

1. PRE-ENGINEERED METAL CANOPIES SHALL BE DESIGNED ACCORDING TO THE METAL BUILDING MANUFACTURERS' ASSOCIATION (MBMA), METAL BUILDING SYSTEMS MANUAL, LATEST EDITION STANDARDS USING THE FOLLOWING CRITERIA:

   A. BUILDING OCCUPANCY CATEGORY III.

   B. MINIMUM DESIGN ROOF LIVE LOAD: 1.2 kPa (AREA REDUCTION NOT ALLOWED)
   C. SNOW LOAD: 0 kPa
   D. WIND LOADS:
      a. SEE GENERAL STRUCTURAL NOTE 2D.

   E. SEISMIC LOADS:

a. MAPPED SPECTRAL RESPONSE ACCEL, S_S	1.02 (%g)
b. MAPPED SPECTRAL RESPONSE ACCEL, S_1	0.41 (%g)
c. SITE COEFFICIENT Fa	1.0
d. SITE COEFFICIENT Fv	1.39
e. DESIGN SPECTRAL RESPONSE ACCEL, S_{DS}	0.68 (%g)
f. DESIGN SPECTRAL RESPONSE ACCEL, S_{D1}	0.38 (%g)
g. SEISMIC IMPORTANCE FACTOR, I_E	1.25
h. SEISMIC DESIGN CATEGORY	D
i. SITE CLASS	C
j. SEISMIC RESPONSE COEFFICIENT, Cs	0.171
k. RESPONSE MODIFICATION FACTOR, R	6.0
l. SPECIAL STEEL CONCENTRICALLY BRACED FRAMES	
m. EQUIVALENT LATERAL FORCE PROCEDURE	

   F. COLLATERAL ROOF DEAD LOADS FOR MISCELLANEOUS SUSPENDED MECHANICAL AND ELECTRICAL EQUIPMENT = 0.2 kPa UNIFORM LOAD. LOCATIONS REQUIRING ADDITIONAL MECHANICAL OR ELECTRICAL SUSPENDED LOADS ARE SHOWN ON THE INDIVIDUAL STRUCTURE DRAWING SHEET.

2. ANCHOR BOLT DESIGN AND INSTALLATION SHALL BE COORDINATED BETWEEN THE PRE-ENGINEERED METAL BUILDING SUPPLIER AND THE PRIMARY CONTRACTOR. THE CONTRACTOR SHALL SUBMIT DESIGNS STAMPED BY A REGISTERED PROFESSIONAL ENGINEER FOR REVIEW AND APPROVAL OF THE DESIGNER AND STRUCTURAL ENGINEER OF RECORD. FOUNDATIONS SHALL NOT BE CONSTRUCTED UNTIL STAMPED SHOP DRAWINGS ARE REVIEWED AND APPROVED.

3. HORIZONTAL LOADS PERPENDICULAR TO THE RIGID FRAMES SHALL BE RESISTED BY THE USE OF VERTICAL CROSS BRACING BETWEEN FRAMES. THE ROOF DIAPHRAGM SHALL BE CROSS-BRACED FOR LATERAL STABILITY AND TRANSFER OF FORCES TO THE RIGID FRAMES. ANCHOR BOLTS SHALL BE DESIGNED AND PROVIDED BY THE PRE-ENGINEERED BUILDING SUPPLIER.

4. STRUCTURE OVERVIEW: THE BUILDING FOUNDATIONS ARE DESIGNED BASED UPON THE FOLLOWING CRITERIA CONCERNING THE PRE-ENGINEERED METAL BUILDING SUPERSTRUCTURE:

   A. FUTURE EXPANSIONS OR ADDITIONS TO THIS BUILDING ARE NOT CONSIDERATIONS.

   B. FRAMING SHALL CONSIST OF CLEAR-SPAN RIGID FRAMES.

   C. DOWNWARD AND UPLIFT REACTIONS, AS WELL AS LATERAL LOADS PERPENDICULAR TO THE RIGID FRAMES ARE RESISTED BY VERTICAL CROSS BRACING, CANTILEVERED COLUMNS, SPREAD FOUNDATIONS, OR SLAB FOUNDATIONS.

   D. LATERAL LOADS PARALLEL TO THE RIGID FRAMES ARE RESISTED BY THE FRAMES AND CONCRETE FOUNDATIONS.

   E. ROOF MAY BE CROSS BRACED AS REQUIRED FOR LATERAL STABILITY.

5. ALL STRUCTURAL FRAMES, DRAG BEAMS, BASE PLATES AND ANCHOR BOLTS SHALL BE HOT DIPPED GALVANIZED. ALL SECONDARY FRAMING MEMBERS SHALL BE ZINC COATED.

SYM	DESCRIPTION	DATE	APPR

NAVFAC

COMMONWEALTH OF VIRGINIA
ANDREW C. SWENCK
Lic. No.051635
04-01-16
PROFESSIONAL ENGINEER
SEAL

Austin Brockenbrough
ENGINEERING • CONSULTING
A/E INFO

APPROVED
FOR COMMANDER NAVFAC 4/07/2016

ACTIVITY
EMAIL BY ANDREA LEMON
SATISFACTORY TO DATE 04/04/2016
DES ACS DRW WMG CHK GCD
<<PM/DM>> LET/RER
BRANCH MANAGER TCK
CHIEF ENG/ARCH EJG
<<XXX>> mfg

DEPARTMENT OF THE NAVY
NAVAL FACILITIES ENGINEERING COMMAND
ATLANTIC DIVISION
CAMP LEMONNIER
NAVAL FACILITIES ENGINEERING COMMAND
NORFOLK, VIRGINIA
DJIBOUTI AFRICA
DESC 1701/P-1701
CONSTRUCT FUEL STORAGE FACILITIES
ABBREVIATIONS, LEGEND AND NOTES

SCALE: AS NOTED
PROJECT NO.:
WORK ORDER NO.
NAVFAC DRAWING NO.
14047010
SHEET 46 OF 186
S-001

DRAWFORM REVISION: 10 MARCH 2009

FILE NAME: G:\14 Jobs\14-013 Djibouti - Fuel Storage Facility - NAVFAC LANT\CAD AutoCAD\S\S-001 ABBREVIATIONS, LEGEND AND NOTES.dwg LAYOUT NAME: ABBREVIATIONS LEGEND AND NOTES PLOTTED: Thursday, March 31, 2016 - 9:41am USER: whermann

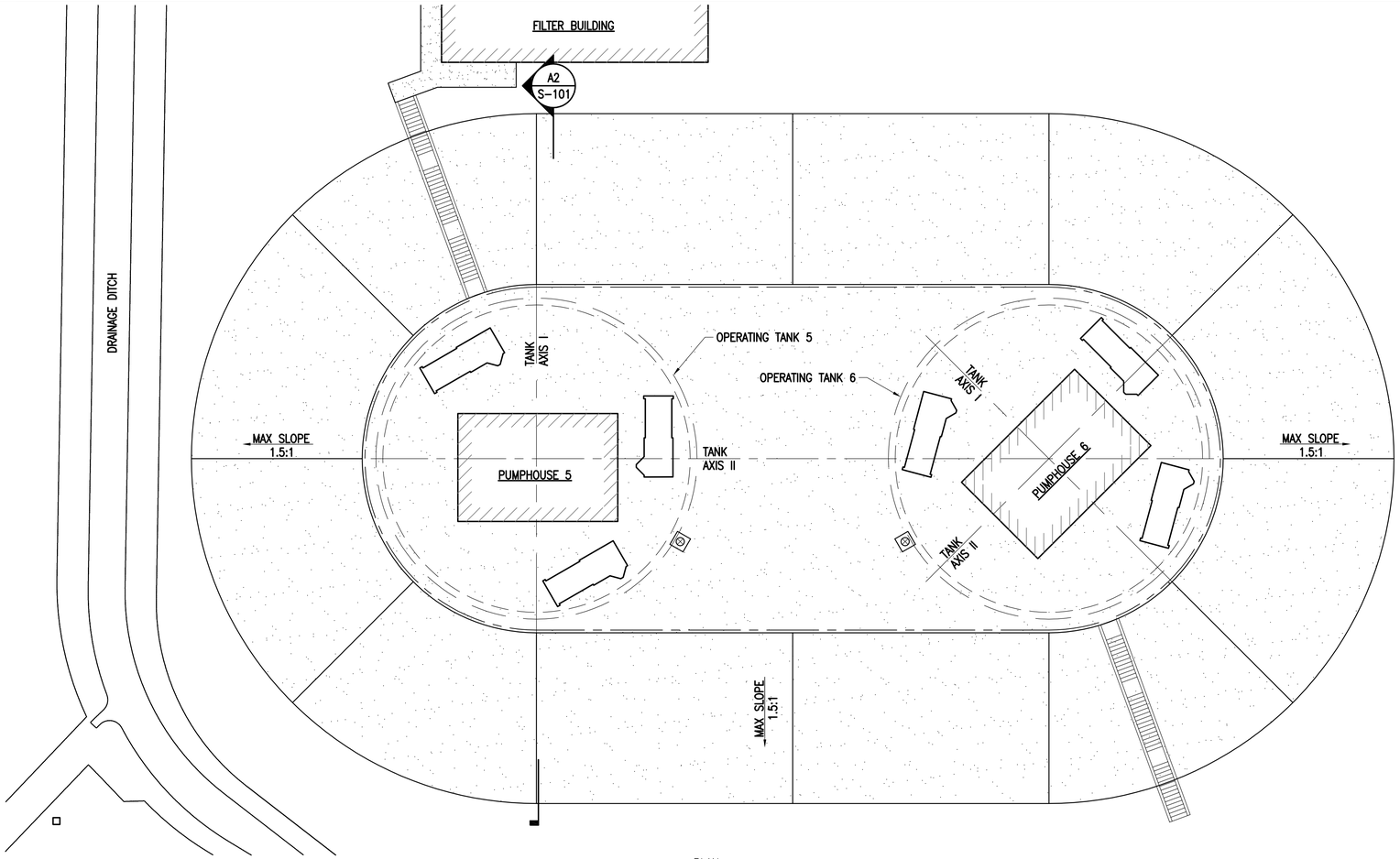

PLAN NORTH

TANK PLAN

SCALE: 1:200

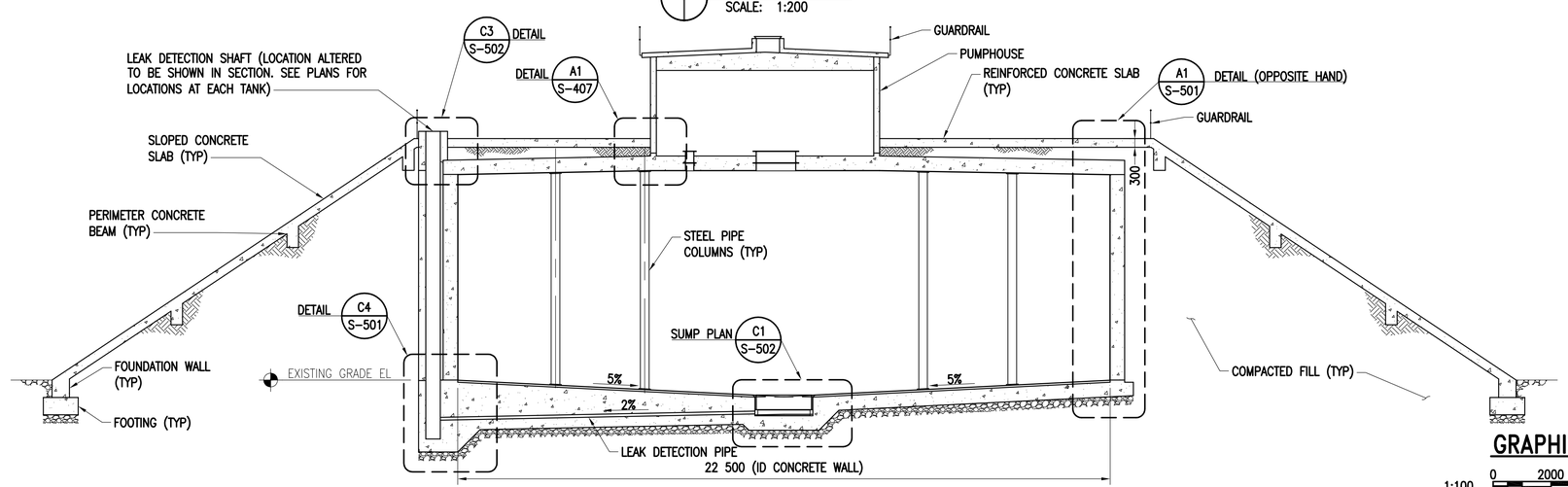

SECTION

SCALE: 1:100 S-101 A2

GRAPHIC SCALE(S):

1:100 0 2000 5000 10 000 mm

1:200 0 4.00 10.00 20.00 m

SYM	DESCRIPTION	DATE	APPR

NAVFAC

COMMONWEALTH OF VIRGINIA
ANDREW C. SWENCK
Lic. No.051635
04-01-16
PROFESSIONAL ENGINEER
SEAL

Austin Brockenbrough
ENGINEERING • CONSULTING

A/E INFO

APPROVED
FOR COMMANDER NAVFAC 4/07/2016

ACTIVITY

SATISFACTORY TO DATE

DES ACS DRW WMG CHK GCD

<<PM/DM>> TCK

BRANCH MANAGER TCK

CHIEF ENG/ARCH MGU

<<XXX>> MGU

DEPARTMENT OF THE NAVY
NAVAL FACILITIES ENGINEERING COMMAND
ATLANTIC DIVISION
CAMP LEMONNIER
NAVAL FACILITIES ENGINEERING COMMAND
NORFOLK, VIRGINIA
DJIBOUTI AFRICA

DESC 1701/P-1701
CONSTRUCT FUEL STORAGE FACILITIES

TANK SITE PLAN & SECTIONS

SCALE: AS NOTED

PROJECT NO.:

WORK ORDER NO.

NAVFAC DRAWING NO.
14047011

SHEET 47 OF 186

S-101

DRAWFORM REVISION: 10 MARCH 2009

FILE NAME: G:\14 Jobs\14-013 Djibouti - Fuel Storage Facility - NAVFAC LANT\CAD AutoCAD\S\S-101 TANK SITE PLAN & SECTIONS.dwg LAYOUT NAME: TANK SITE PLAN & SECTIONS PLOTTED: Thursday, March 31, 2016 - 9:42am USER: wherrmann

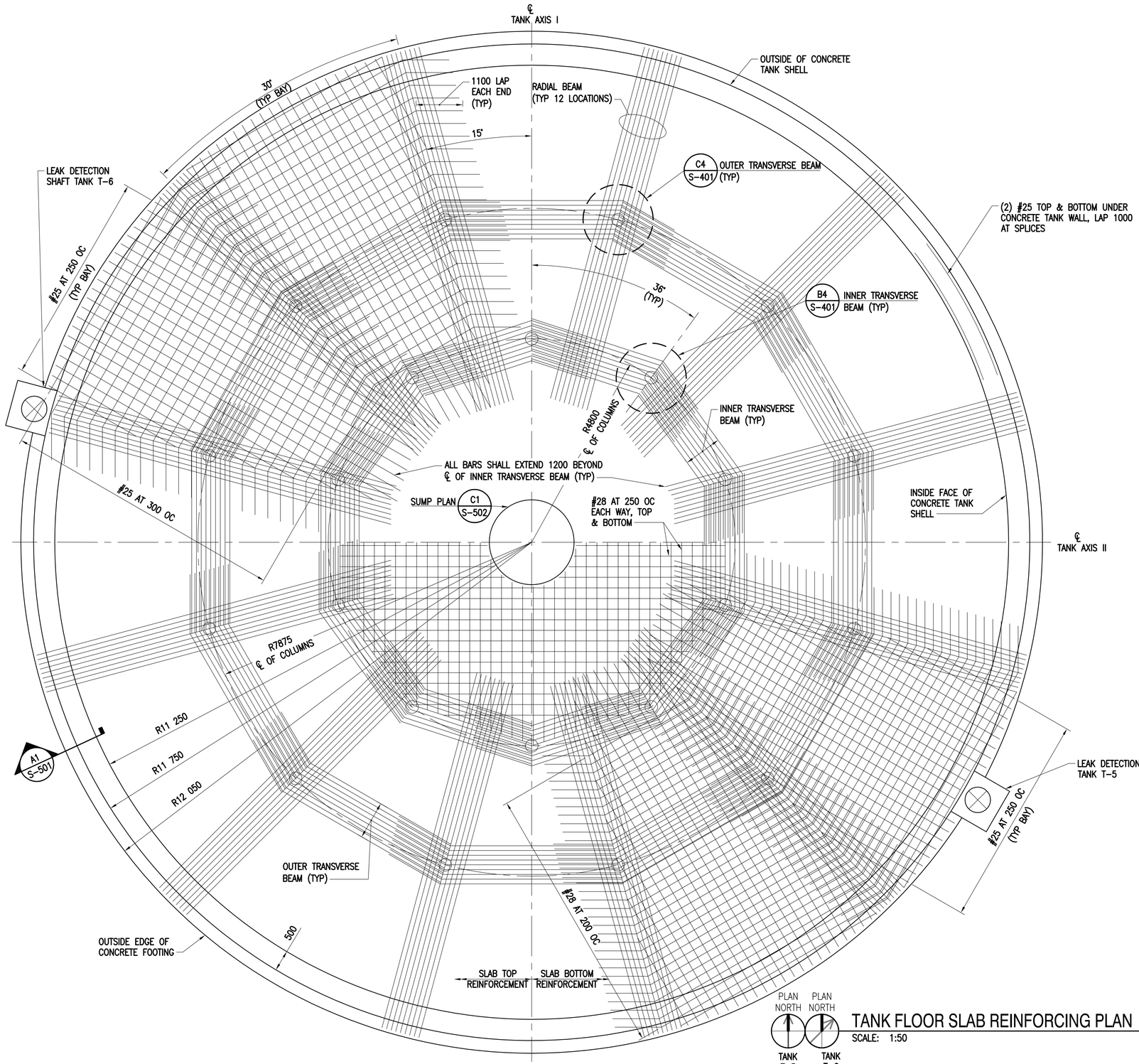

TANK FLOOR SLAB REINFORCING PLAN

SCALE: 1:50

NOTE:
AT CONTRACTOR'S OPTION, THE FOUNDATION SLAB MAY BE PLACED MONOLITHIC (WITHOUT CONSTRUCTION JOINTS) PROVIDED THAT THE CONTRACTOR CAN ENSURE ADEQUATE, CONTINUOUS, AND UNINTERRUPTED LABOR, MATERIAL, SUPPLY, AND CURING DURING THE CONSTRUCTION OF THE SLAB. IF JOINTS ARE PROVIDED, THE CONTRACTOR SHALL SUBMIT JOINT LAYOUT FOR CONTRACTING OFFICER REVIEW. SEE DETAIL A4 THIS SHEET FOR TANK SLAB CONSTRUCTION JOINT.

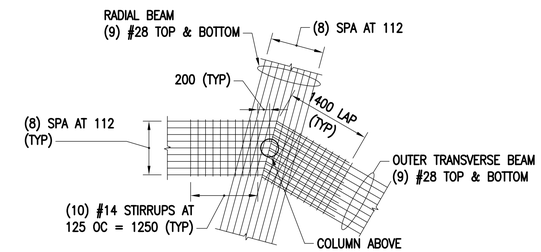

OUTER TRANSVERSE BEAM

SCALE: 1:50 — S-401 C4

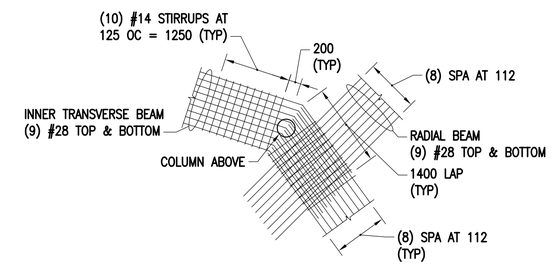

INNER TRANSVERSE BEAM

SCALE: 1:50 — S-401 B4

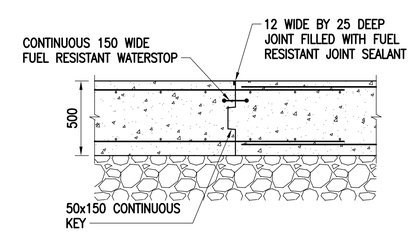

TANK SLAB CONSTRUCTION JOINT

SCALE: 1:20 — S-401, S-404 A4

GRAPHIC SCALE(S):
1:50 — 0 1000 2000 5000 mm

		APPR
		DATE
		DESCRIPTION
		SYM

NAVFAC

COMMONWEALTH OF VIRGINIA
ANDREW C. SWENCK
Lic. No.051635
04-01-16
PROFESSIONAL ENGINEER
SEAL

Austin Brockenbrough
ENGINEERING · CONSULTING
A/E INFO

APPROVED
FOR COMMANDER NAVFAC 4/07/2016
ACTIVITY
SATISFACTORY TO DATE
DES ACS DRW WMG CHK GCD
<<PM/DM>>
BRANCH MANAGER KCK
CHIEF ENG/ARCH
<<XXX>> MZR

DEPARTMENT OF THE NAVY
NAVAL FACILITIES ENGINEERING COMMAND
ATLANTIC DIVISION
NAVAL FACILITIES ENGINEERING COMMAND
NORFOLK, VIRGINIA
CAMP LEMONNIER
DJIBOUTI AFRICA

DESC 1701/P-1701
CONSTRUCT FUEL STORAGE FACILITIES

TANK FLOOR SLAB REINFORCING PLAN

SCALE: AS NOTED
PROJECT NO.:
WORK ORDER NO.
NAVFAC DRAWING NO.
14047012
SHEET 48 OF 186
S-401

DRAWFORM REVISION: 10 MARCH 2009

FILE NAME: G:\14 Jobs\14-013 Djibouti - Fuel Storage Facility - NAVFAC LANT\CAD AutoCAD\S\S-401 TANK FLOOR SLAB REINFORCING PLAN.dwg LAYOUT NAME: TANK FLOOR SLAB REINFORCING PLAN PLOTTED: Thursday, March 31, 2016 - 9:42am USER: whermann

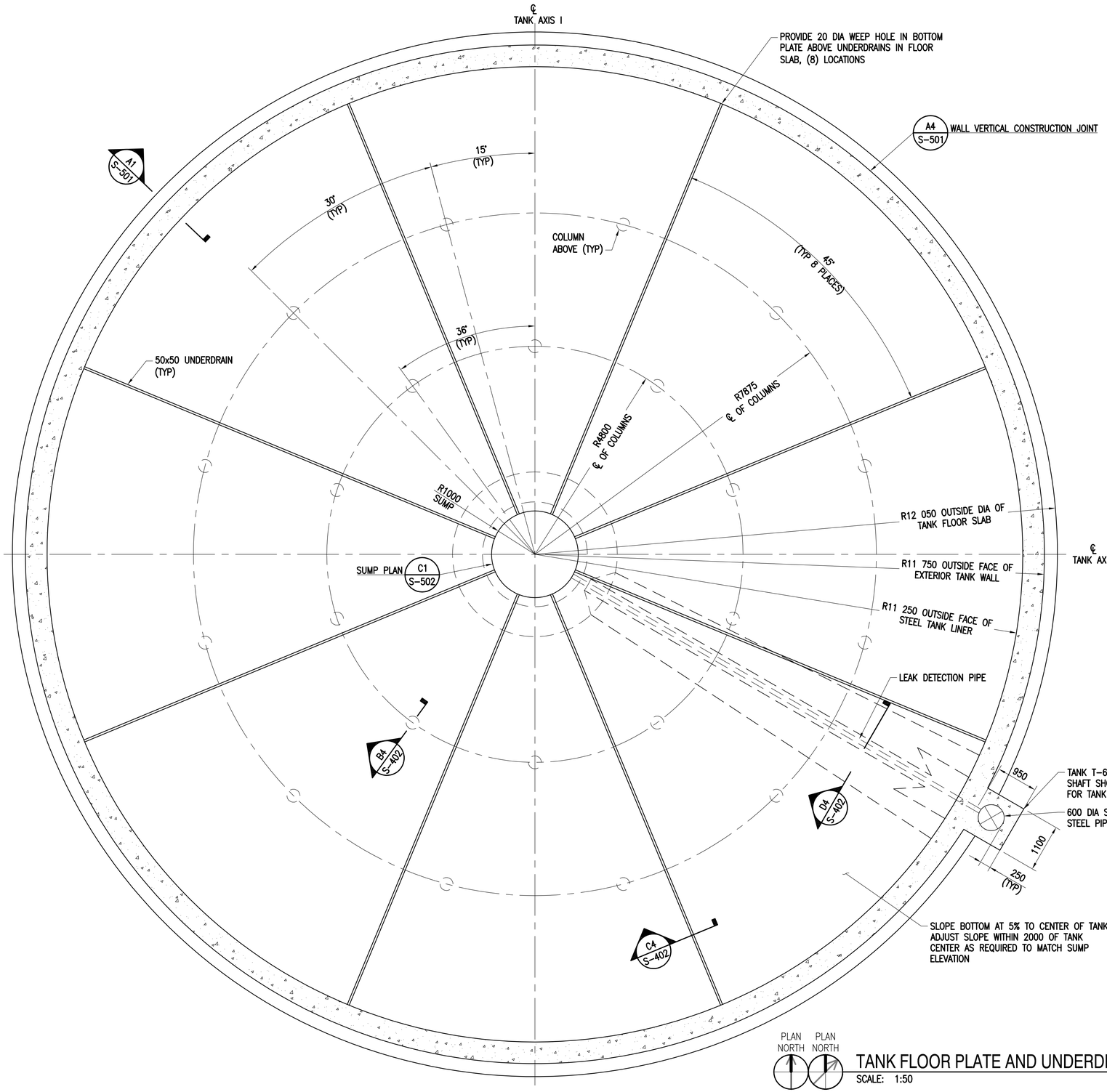

PLAN NORTH — TANK T-5
PLAN NORTH — TANK T-6

TANK FLOOR PLATE AND UNDERDRAIN PLAN
SCALE: 1:50

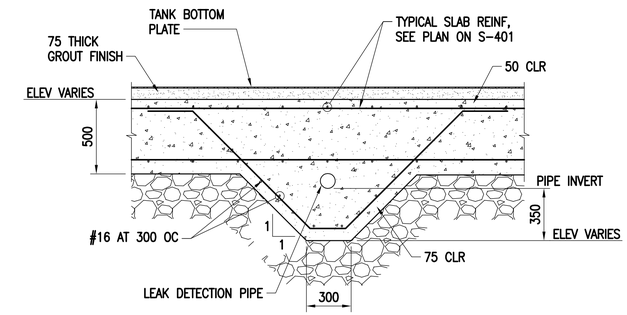

SECTION D4
SCALE: 1:20 S-402

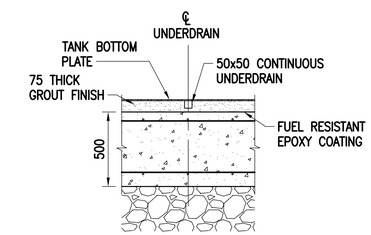

SECTION C4
SCALE: 1:20 S-402

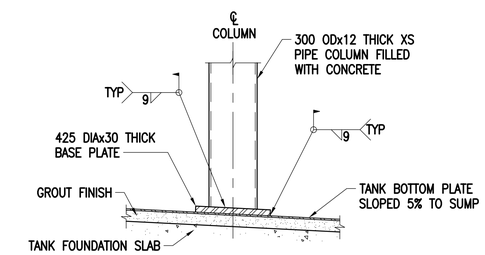

SECTION B4
SCALE: 1:20 S-402

GRAPHIC SCALE(S):
1:50 — 0, 1000, 2000, 5000 mm
1:20 — 0, 400, 1000, 2000 mm

SYM	DESCRIPTION	DATE	APPR

NAVFAC

COMMONWEALTH OF VIRGINIA — ANDREW C. SWENCK — Lic. No.051635 — 04-01-16 — PROFESSIONAL ENGINEER — SEAL

Austin Brockenbrough — ENGINEERING · CONSULTING

A/E INFO

APPROVED: R. B. Fox Jr. — FOR COMMANDER NAVFAC — 4/07/2016

ACTIVITY

SATISFACTORY TO — DATE

DES ACS | DRW WMG | CHK GCD

<<PM/DM>>

BRANCH MANAGER KCK

CHIEF ENG/ARCH

<<XXX>> MGR

DEPARTMENT OF THE NAVY
NAVAL FACILITIES ENGINEERING COMMAND
ATLANTIC DIVISION — NAVAL FACILITIES ENGINEERING COMMAND — NORFOLK, VIRGINIA
CAMP LEMONNIER — DJIBOUTI AFRICA

DESC 1701/P-1701
CONSTRUCT FUEL STORAGE FACILITIES

TANK FLOOR PLATE & UNDERDRAIN PLAN

SCALE: AS NOTED
PROJECT NO.:
WORK ORDER NO.
NAVFAC DRAWING NO. 14047013
SHEET 49 OF 186

S-402

DRAWFORM REVISION: 10 MARCH 2009

FILE NAME: G:\14 Jobs\14-013 Djibouti - Fuel Storage Facility - NAVFAC LANT\CAD AutoCAD\S\S-402 TANK FLOOR PLATE & UNDERDRAIN PLAN.dwg LAYOUT NAME: TANK FLOOR PLATE & UNDERDRAIN PLAN PLOTTED: Thursday, March 31, 2016 - 9:42am USER: wherrmann

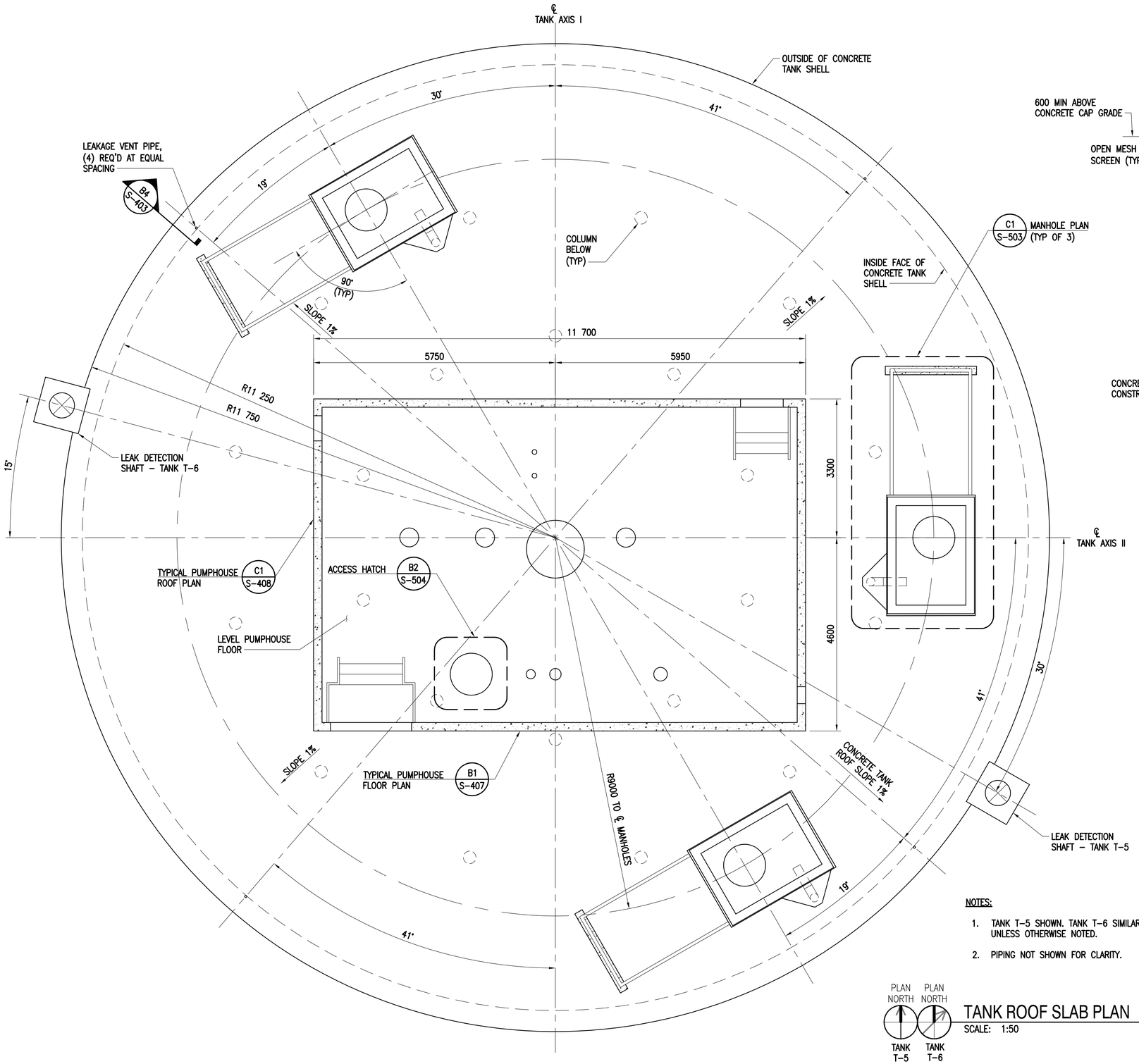

NOTES:

1. TANK T-5 SHOWN. TANK T-6 SIMILAR, UNLESS OTHERWISE NOTED.
2. PIPING NOT SHOWN FOR CLARITY.

PLAN NORTH — TANK T-5 | PLAN NORTH — TANK T-6

TANK ROOF SLAB PLAN

SCALE: 1:50

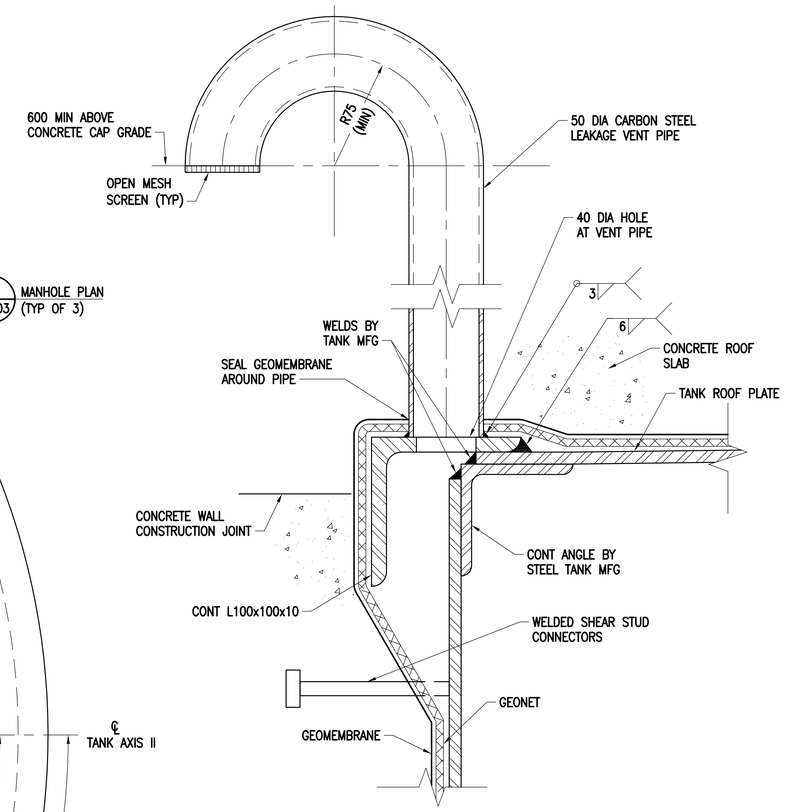

SECTION B4

SCALE: NONE S-403

GRAPHIC SCALE(S):

1:50 — 0 1000 2000 5000 mm

SYM	DESCRIPTION	DATE	APPR

NAVFAC

COMMONWEALTH OF VIRGINIA — ANDREW C. SWENCK — Lic. No.051635 — 04-01-16 — PROFESSIONAL ENGINEER — SEAL

Austin Brockenbrough — ENGINEERING • CONSULTING

A/E INFO

APPROVED — FOR COMMANDER NAVFAC — 4/07/2016

ACTIVITY

SATISFACTORY TO — DATE

DES ACS | DRW WMG | CHK GCD

<<PM/DM>> — BRANCH MANAGER TCK

CHIEF ENG/ARCH — <<XXX>> MGU

DEPARTMENT OF THE NAVY — NAVAL FACILITIES ENGINEERING COMMAND — ATLANTIC DIVISION — NAVAL FACILITIES ENGINEERING COMMAND — NORFOLK, VIRGINIA

CAMP LEMONNIER — DJIBOUTI AFRICA

DESC 1701/P-1701
CONSTRUCT FUEL STORAGE FACILITIES

TANK ROOF SLAB PLAN

SCALE: AS NOTED

PROJECT NO.:

WORK ORDER NO.

NAVFAC DRAWING NO. 14047014

SHEET 50 OF 186

S-403

DRAWFORM REVISION: 10 MARCH 2009

FILE NAME: G:\14 Jobs\14-013 (Djibouti - Fuel Storage Facility - NAVFAC LANT\CAD AutoCAD\S\S-403 TANK ROOF SLAB PLAN.dwg LAYOUT NAME: TANK ROOF SLAB PLAN PLOTTED: Thursday, March 31, 2016 - 9:42am USER: whermann

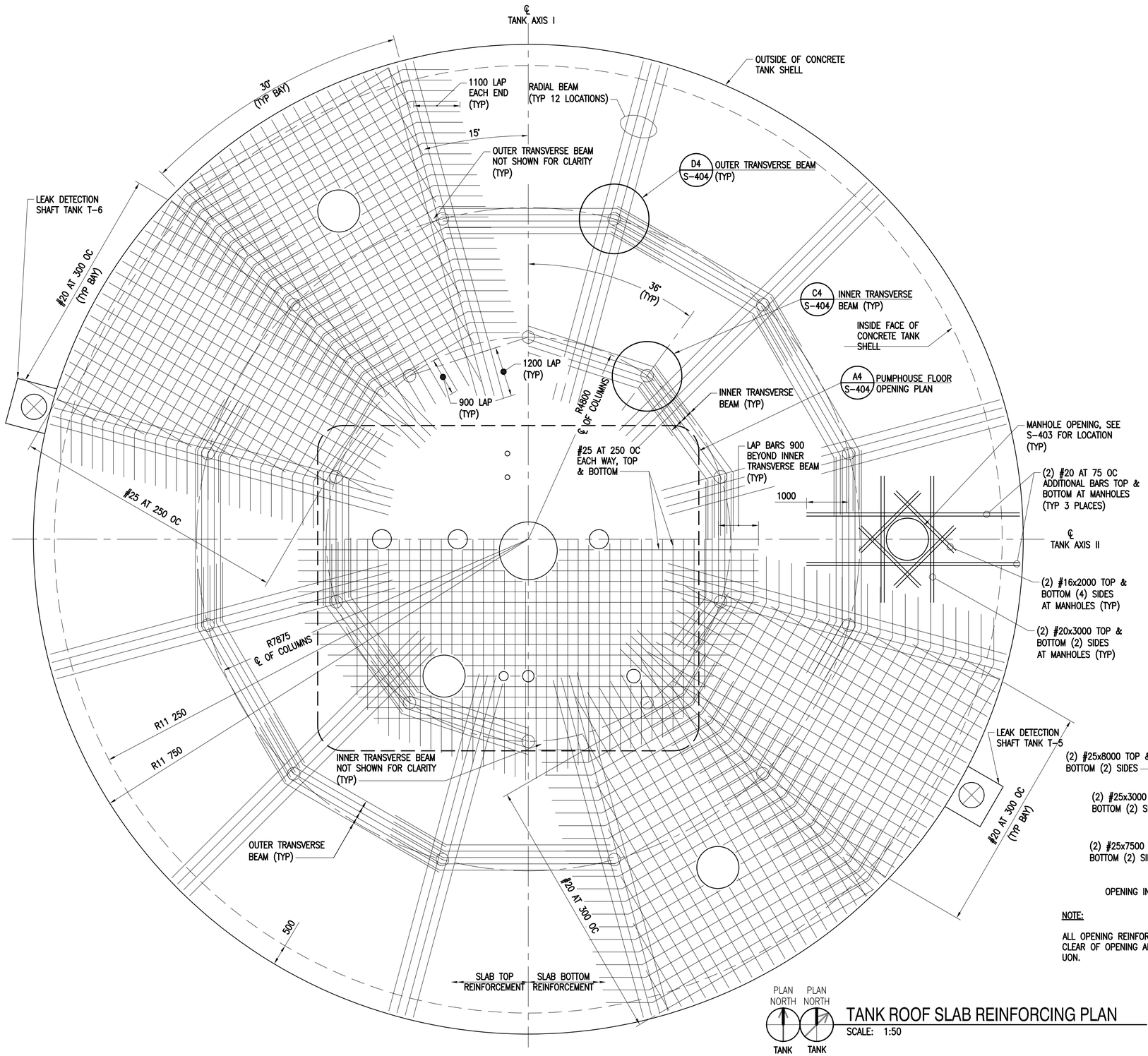

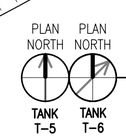

TANK ROOF SLAB REINFORCING PLAN

SCALE: 1:50

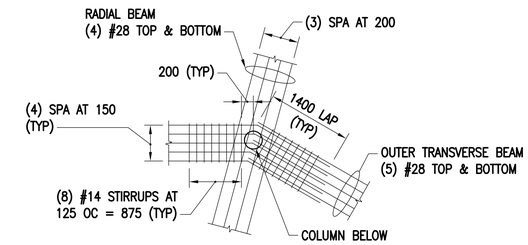

OUTER TRANSVERSE BEAM (D4)

SCALE: 1:50 S-404

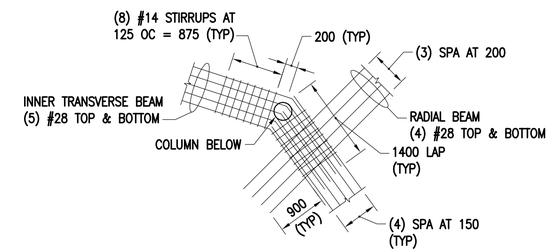

INNER TRANSVERSE BEAM (C4)

SCALE: 1:50 S-404

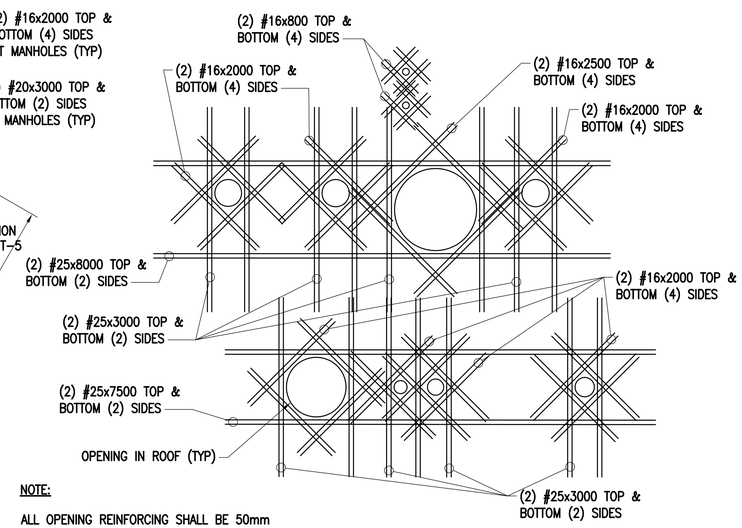

NOTE:

ALL OPENING REINFORCING SHALL BE 50mm CLEAR OF OPENING AND SPACED 75mm OC, UON.

PUMPHOUSE FLOOR OPENING PLAN (A4)

SCALE: 1:50 S-404

GRAPHIC SCALE(S):

1:50 — 0 1000 2000 5000 mm

SYM	DESCRIPTION	DATE	APPR

NAVFAC

COMMONWEALTH OF VIRGINIA — ANDREW C. SWENCK — Lic. No.051635 — 04-01-16 — PROFESSIONAL ENGINEER — SEAL

Austin Brockenbrough — ENGINEERING · CONSULTING

A/E INFO.

APPROVED: FOR COMMANDER NAVFAC 4/07/2016

ACTIVITY

SATISFACTORY TO DATE

DES ACS DRW WMG CHK GCD

<<PM/DM>>

BRANCH MANAGER TCK

CHIEF ENG/ARCH

<<XXX>> MGU

DEPARTMENT OF THE NAVY — NAVAL FACILITIES ENGINEERING COMMAND — ATLANTIC DIVISION — CAMP LEMONNIER

NAVAL FACILITIES ENGINEERING COMMAND — NORFOLK, VIRGINIA

DJIBOUTI AFRICA

DESC 1701/P-1701
CONSTRUCT FUEL STORAGE FACILITIES

TANK ROOF SLAB REINFORCING PLAN

SCALE: AS NOTED

PROJECT NO.:

WORK ORDER NO.

NAVFAC DRAWING NO.: 14047015

SHEET 51 OF 186

S-404

DRAWFORM REVISION: 10 MARCH 2009

FILE NAME: G:\14 Jobs\14-013 Djibouti - Fuel Storage Facility - NAVFAC LANT\CAD AutoCAD\S\S-404 TANK ROOF SLAB REINFORCING PLAN.dwg LAYOUT NAME: TANK ROOF SLAB REINFORCING PLAN PLOTTED: Thursday, March 31, 2016 - 9:43am USER: wherrmann

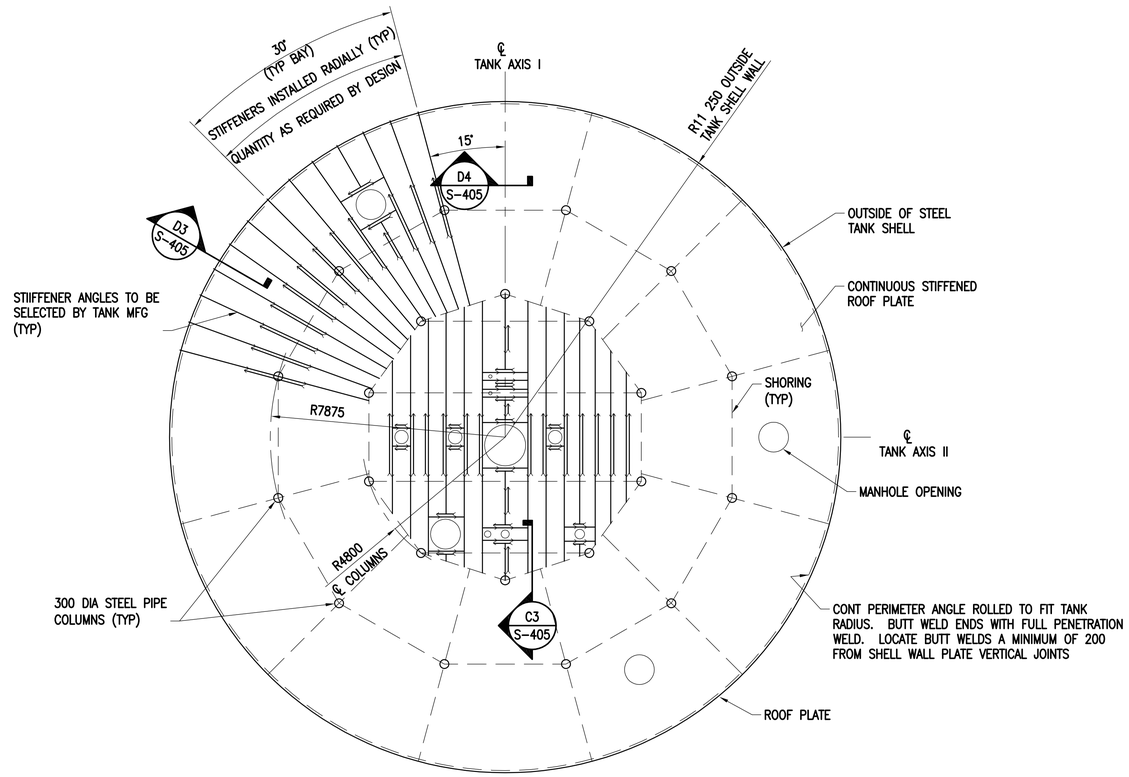

CONTRACTOR NOTE:

THE STIFFENED ROOF PLATE SHALL BE DESIGNED BY STEEL TANK MFG IN ACCORDANCE WITH API STANDARD 650, AND SHALL SPAN BETWEEN SHORING LINES SHOWN. THE STIFFENED ROOF PLATE IS TO SUPPORT UNSHORED ITS OWN DEAD WEIGHT PLUS A UNIFORM CONCRETE LOAD OF 16.0 kPa PLUS A UNIFORM CONSTRUCTION LOAD OF 5.0 kPa BETWEEN THE REQUIRED SHORING SUPPORT POINTS. DISTRIBUTE ANY LOADS APPLIED DURING PLACING OF CONCRETE SO AS NOT TO EXCEED THESE AMOUNTS.

TANK ROOF STIFFENED PLATE FRAMING PLAN

SCALE: 1:100

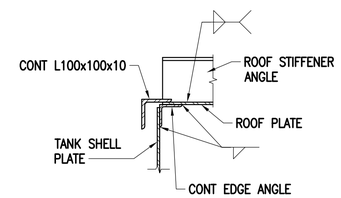

SECTION D3

SCALE: 1:10 S-405

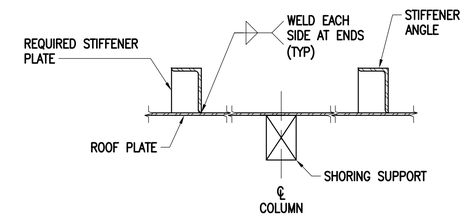

SECTION D4

SCALE: 1:10 S-405

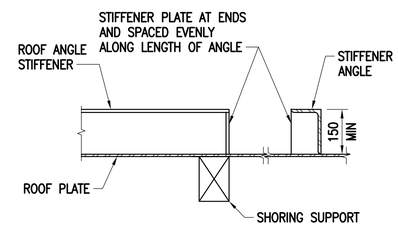

SECTION C3

SCALE: 1:10 S-405

GRAPHIC SCALE(S):

1:10 0 100 200 500 1000 mm

1:100 0 2000 5000 10 000 mm

SYM	DESCRIPTION	DATE	APPR

NAVFAC

COMMONWEALTH OF VIRGINIA
ANDREW C. SWENCK
Lic. No.051635
04-01-16
PROFESSIONAL ENGINEER
SEAL

Austin Brockenbrough
ENGINEERING • CONSULTING

A/E INFO

APPROVED:
FOR COMMANDER NAVFAC 4/07/2016

ACTIVITY

SATISFACTORY TO DATE

DES ACS DRW WMG CHK GCD

<<PM/DM>>

BRANCH MANAGER KCK

CHIEF ENG/ARCH

<<XXX>> MFU

DEPARTMENT OF THE NAVY
NAVAL FACILITIES ENGINEERING COMMAND
ATLANTIC DIVISION
NAVAL FACILITIES ENGINEERING COMMAND
NORFOLK, VIRGINIA
CAMP LEMONNIER
DJIBOUTI AFRICA

DESC 1701/P-1701
CONSTRUCT FUEL STORAGE FACILITIES

TANK ROOF STIFFENED STEEL PLATE PLAN

SCALE: AS NOTED

PROJECT NO.:

WORK ORDER NO.

NAVFAC DRAWING NO.
14047016

SHEET 52 OF 186

S-405

DRAWFORM REVISION: 10 MARCH 2009

FILE NAME: G:\14 Jobs\14-013 Djibouti - Fuel Storage Facility - NAVFAC LANT\CAD AutoCAD\S\S-405 TANK ROOF STIFFENED STEEL PLATE PLAN.dwg LAYOUT NAME: TANK ROOF STIFFENED STEEL PLATE PLAN PLOTTED: Thursday, March 31, 2016 - 9:43am USER: wherrmann

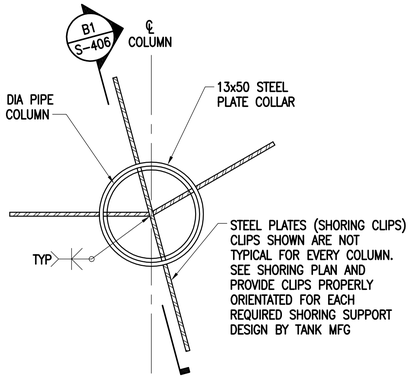

TOP OF STEEL COLUMN PLAN

SCALE: 1:10 S-406 C1

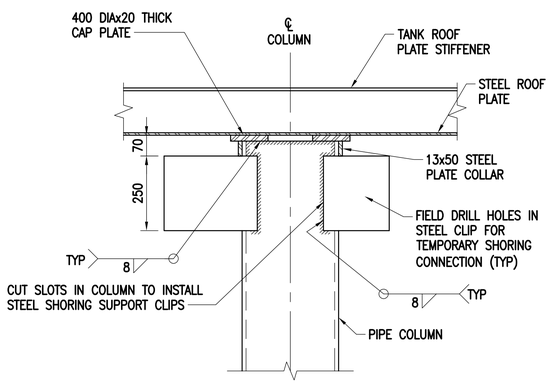

SECTION

SCALE: 1:10 S-406 B1

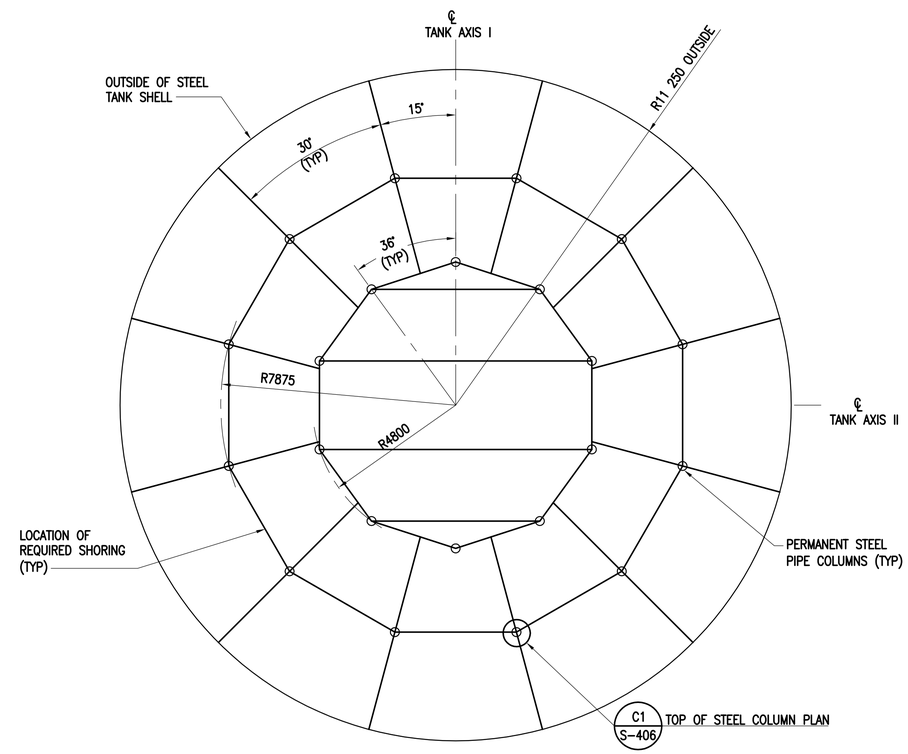

TANK ROOF SLAB SHORING PLAN

SCALE: 1:100

SHORING NOTES:

1. PROVIDE SHORING SUPPORT AT LOCATIONS SHOWN IN TANK ROOF SLAB SHORING PLAN FOR ERECTION OF THE TANK CONCRETE ROOF SLAB. DESIGN SHORES, CONNECTIONS, BRACING, AND ALL ASSOCIATED DETAILS TO SAFELY SUPPORT CONSTRUCTION. THE SHORING DESIGN SHALL BE BY THE STEEL TANK MFG.
2. THE STIFFENED ROOF PLATE SHOWN ON SHEET S-405 SHALL BE DESIGNED TO SPAN BETWEEN SHORING LINES SHOWN.
3. SHORING SHALL REMAIN IN PLACE UNTIL THE CONCRETE HAS REACHED A 28 DAY COMPRESSIVE STRENGTH OF f'c=34.5 MPa. REMOVE ALL SHORING PRIOR TO PAINTING THE TANK INTERIOR.
4. SHORING SHALL UTILIZE THE TANK PIPE COLUMNS FOR SUPPORT AS LONG AS THE COLUMNS ARE NOT OVERSTRESSED IN ACCORDANCE WITH THE AISC MANUAL OF STEEL CONSTRUCTION. ANY CLIPS, PLATES, OR OTHER ATTACHMENTS FOR SHORING PURPOSES NEAR THE TOP OF THE COLUMNS AND THE TANK SHELL PLATE MAY BE LEFT IN PLACE. ALL OTHER ATTACHMENTS MUST BE REMOVED AND GROUND SMOOTH BEFORE PAINTING THE TANK INTERIOR. SEE SECTION THIS SHEET FOR STEEL PLATE CLIPS PROVIDED ON THE TOP OF THE TANK COLUMNS.
5. THE DESIGN OF SHORES SHALL LIMIT THEIR DEFLECTION TO THE SPAN LENGTH DIVIDED BY 360 OF 9mm, WHICHEVER IS LESS. ADDITIONAL TEMPORARY COLUMNS AND BRACING MAY BE UTILIZED.
6. SUBMIT SHOW DRAWINGS FOR DESIGN OF SHORING SUPPORTS ALONG WITH CALCULATIONS STAMPED BY A REGISTERED PROFESSIONAL ENGINEER FOR REVIEW.

GRAPHIC SCALE(S):

1:100 0 2000 5000 10 000 mm

1:10 0 100 200 500 1000 mm

SYM	DESCRIPTION	DATE	APPR

NAVFAC

COMMONWEALTH OF VIRGINIA
ANDREW C. SWENCK
Lic. No.051635
04-01-16
PROFESSIONAL ENGINEER
SEAL

Austin Brockenbrough
ENGINEERING • CONSULTING
A/E INFO

APPROVED
FOR COMMANDER NAVFAC 4/07/2016
ACTIVITY
SATISFACTORY TO DATE
DES ACS DRW WMG CHK GCD
<<PM/DM>>
BRANCH MANAGER KCK
CHIEF ENG/ARCH
<<XXX>> MFR

DEPARTMENT OF THE NAVY
NAVAL FACILITIES ENGINEERING COMMAND
ATLANTIC DIVISION
NAVAL FACILITIES ENGINEERING COMMAND
NORFOLK, VIRGINIA
CAMP LEMONNIER
DJIBOUTI AFRICA
DESC 1701/P-1701
CONSTRUCT FUEL STORAGE FACILITIES
TANK ROOF SHORING PLAN

SCALE: AS NOTED
PROJECT NO.:
WORK ORDER NO.
NAVFAC DRAWING NO. 14047017
SHEET 53 OF 186
S-406

DRAWFORM REVISION: 10 MARCH 2009

FILE NAME: G:\14 Jobs\14-013 Djibouti - Fuel Storage Facility - NAVFAC LANT\CAD AutoCAD\S\S-406 TANK ROOF SHORING PLAN.dwg LAYOUT NAME: TANK ROOF SHORING PLAN PLOTTED: Thursday, March 31, 2016 - 9:43am USER: whermann

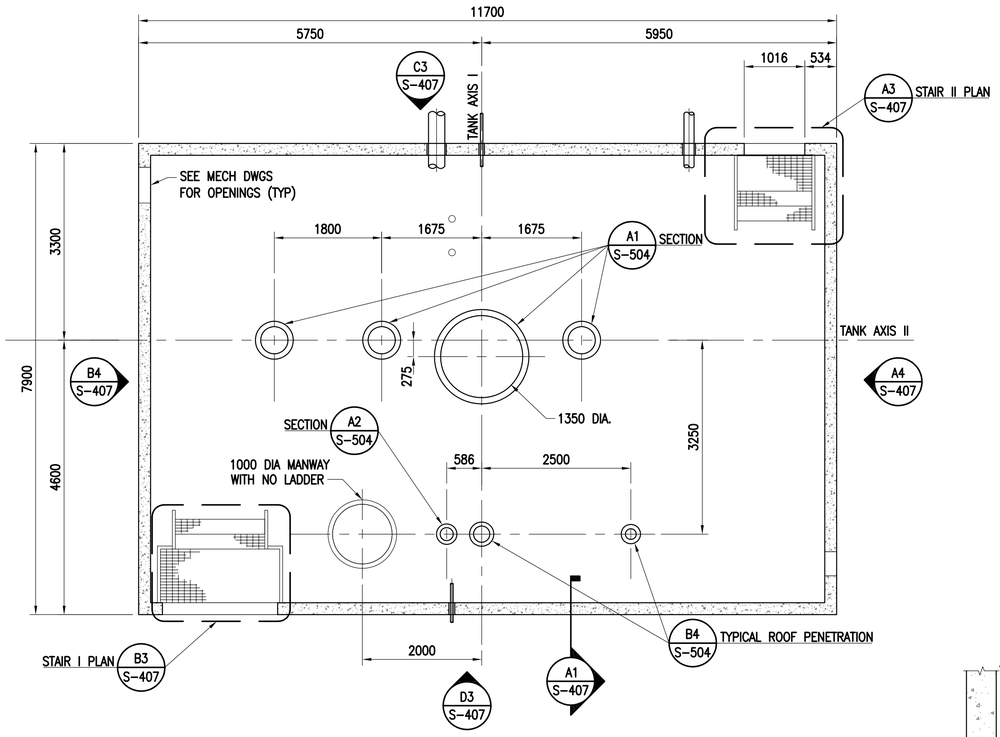

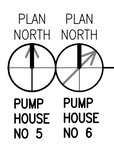

TYPICAL PUMPHOUSE FLOOR PLAN (B1)
SCALE: 1:50 S-403

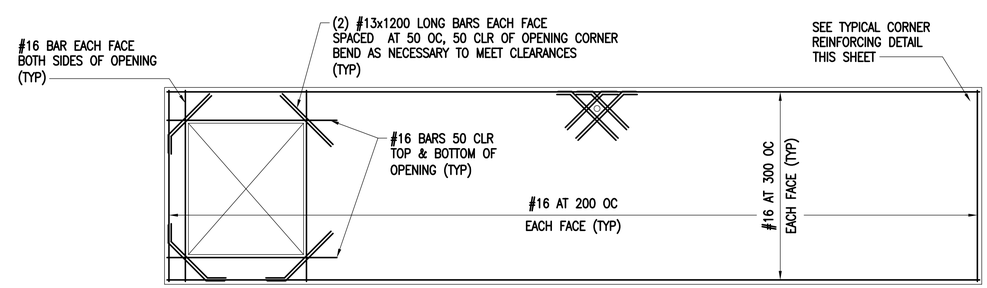

ELEVATION (D3)
SCALE: 1:50 S-407

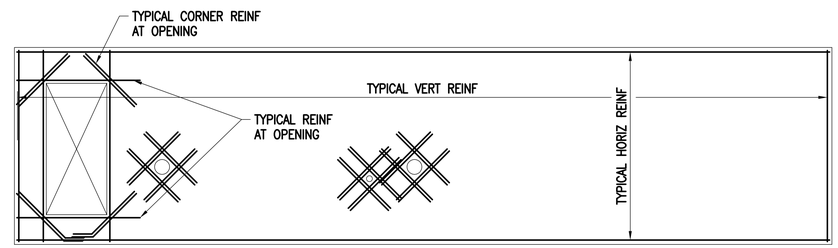

ELEVATION (C3)
SCALE: 1:50 S-407

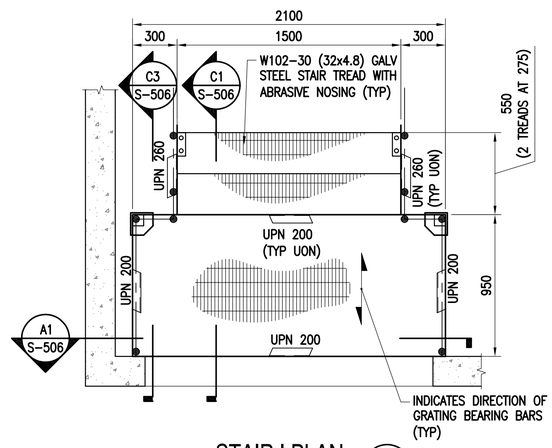

STAIR I PLAN (B3)
SCALE: 1:20 S-407

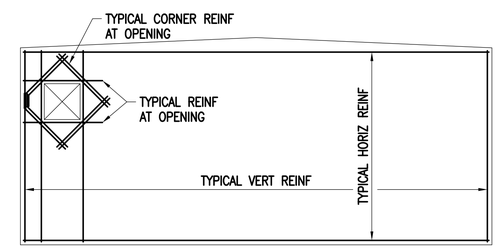

ELEVATION (B4)
SCALE: 1:50 S-407

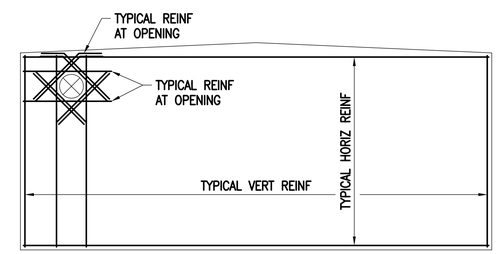

ELEVATION (A4)
SCALE: 1:50 S-407

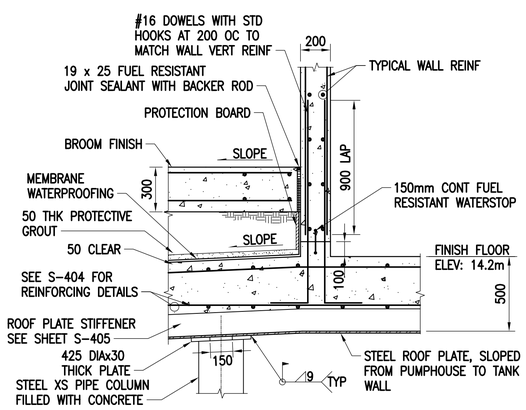

DETAIL (A1)
SCALE: 1:20 S-101

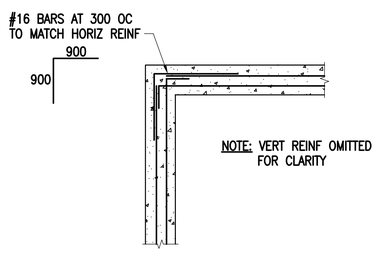

TYPICAL CORNER REINFORCING
SCALE: 1:20

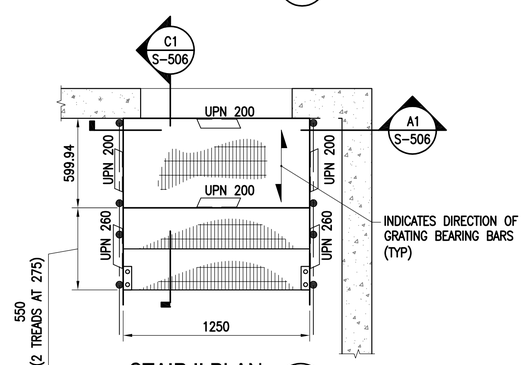

STAIR II PLAN (A3)
SCALE: 1:20 S-407

GRAPHIC SCALE(S):
1:50 0 1000 2000 5000 mm

SYM	DESCRIPTION	DATE	APPR

NAVFAC

COMMONWEALTH OF VIRGINIA
ANDREW C. SWENCK
Lic. No.051635
04-01-16
PROFESSIONAL ENGINEER
SEAL

Austin Brockenbrough
ENGINEERING • CONSULTING

A/E INFO
APPROVED
FOR COMMANDER NAVFAC 4/07/2016
ACTIVITY
SATISFACTORY TO DATE
DES ACS DRW WMG CHK GCD
<<PM/DM>>
BRANCH MANAGER KCK
CHIEF ENG/ARCH
<<XXX>> MFU

DEPARTMENT OF THE NAVY
NAVAL FACILITIES ENGINEERING COMMAND
ATLANTIC DIVISION
NAVAL FACILITIES ENGINEERING COMMAND
NORFOLK, VIRGINIA
CAMP LEMONNIER
DJIBOUTI AFRICA

DESC 1701/P-1701
CONSTRUCT FUEL STORAGE FACILITIES

PUMPHOUSE FLOOR PLAN

SCALE: AS NOTED
PROJECT NO.:
WORK ORDER NO.
NAVFAC DRAWING NO.
14047018
SHEET 54 OF 186
S-407

DRAWFORM REVISION: 10 MARCH 2009

FILE NAME: G:\14 Jobs\14-013 Djibouti - Fuel Storage Facility - NAVFAC LANT\CAD AutoCAD\S\S-407 PUMPHOUSE FLOOR PLAN.dwg LAYOUT NAME: PUMPHOUSE FLOOR PLAN PLOTTED: Thursday, March 31, 2016 - 9:43am USER: wkermmann

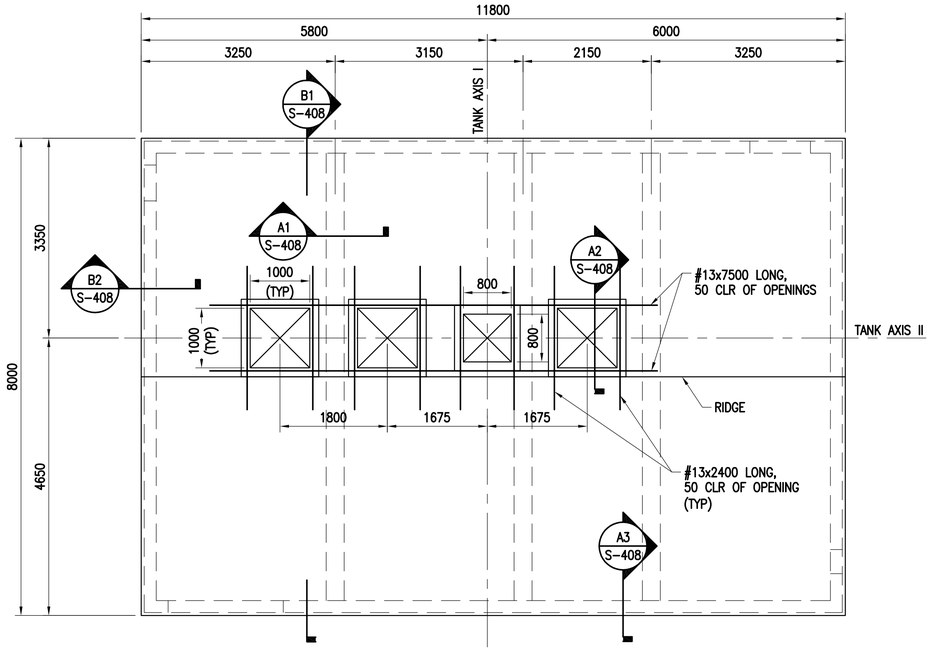

PLAN NORTH PLAN NORTH

PUMP HOUSE NO 5 PUMP HOUSE NO 6

TYPICAL PUMPHOUSE ROOF PLAN (C1)

SCALE: 1:50 S-403

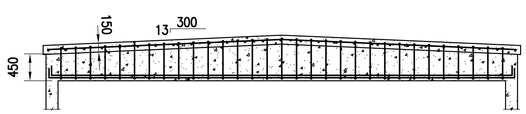

SECTION (B1)

SCALE: 1:50 S-408

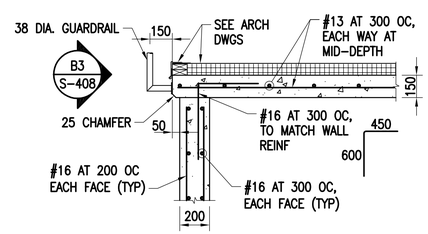

SECTION (B2)

SCALE: 1:20 S-408

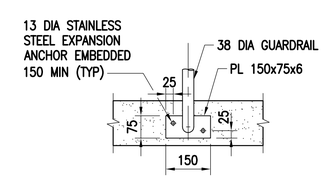

ELEVATION (B3)

SCALE: 1:10 S-408

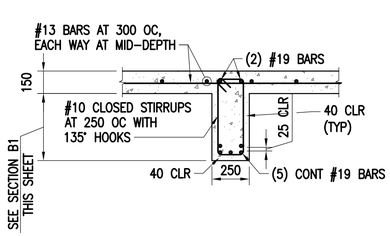

SECTION (A1)

SCALE: 1:20 S-408

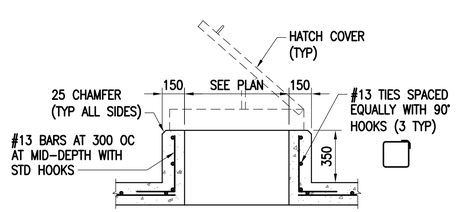

SECTION (A2)

SCALE: 1:20 S-408

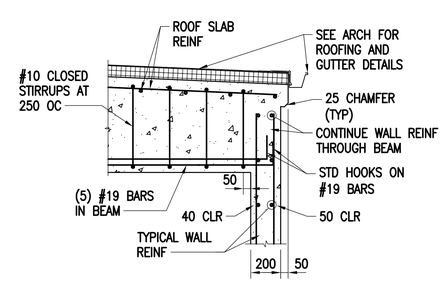

SECTION (A3)

SCALE: 1:20 S-408

GRAPHIC SCALE(S):

1:50 — 0, 1000, 2000, 5000 mm

1:20 — 0, 400, 1000, 2000 mm

1:10 — 0, 100, 200, 500, 1000 mm

SYM	DESCRIPTION	DATE	APPR

NAVFAC

COMMONWEALTH OF VIRGINIA
ANDREW C. SWENCK
Lic. No.051635
04-01-16
PROFESSIONAL ENGINEER
SEAL

Austin Brockenbrough
ENGINEERING • CONSULTING
A/E INFO

APPROVED
FOR COMMANDER NAVFAC 4/07/2016
ACTIVITY
SATISFACTORY TO DATE
DES ACS DRW WMG CHK GCD
<<PM/DM>>
BRANCH MANAGER KCK
CHIEF ENG/ARCH
<<XXX>> MFU

DEPARTMENT OF THE NAVY
NAVAL FACILITIES ENGINEERING COMMAND
ATLANTIC DIVISION
CAMP LEMONNIER
NAVAL FACILITIES ENGINEERING COMMAND
NORFOLK, VIRGINIA
DJIBOUTI AFRICA

DESC 1701/P-1701
CONSTRUCT FUEL STORAGE FACILITIES

PUMPHOUSE ROOF PLAN

SCALE: AS NOTED
PROJECT NO.:
WORK ORDER NO.
NAVFAC DRAWING NO.
14047019
SHEET 55 OF 186
S-408

DRAWFORM REVISION: 10 MARCH 2009

FILE NAME: G:\14 Jobs\14-013 Djibouti - Fuel Storage Facility - NAVFAC LANT\CAD AutoCAD\S\S-408 PUMPHOUSE ROOF PLAN.dwg LAYOUT NAME: PUMPHOUSE ROOF PLAN PLOTTED: Thursday, March 31, 2016 - 9:44am USER: wherrmann

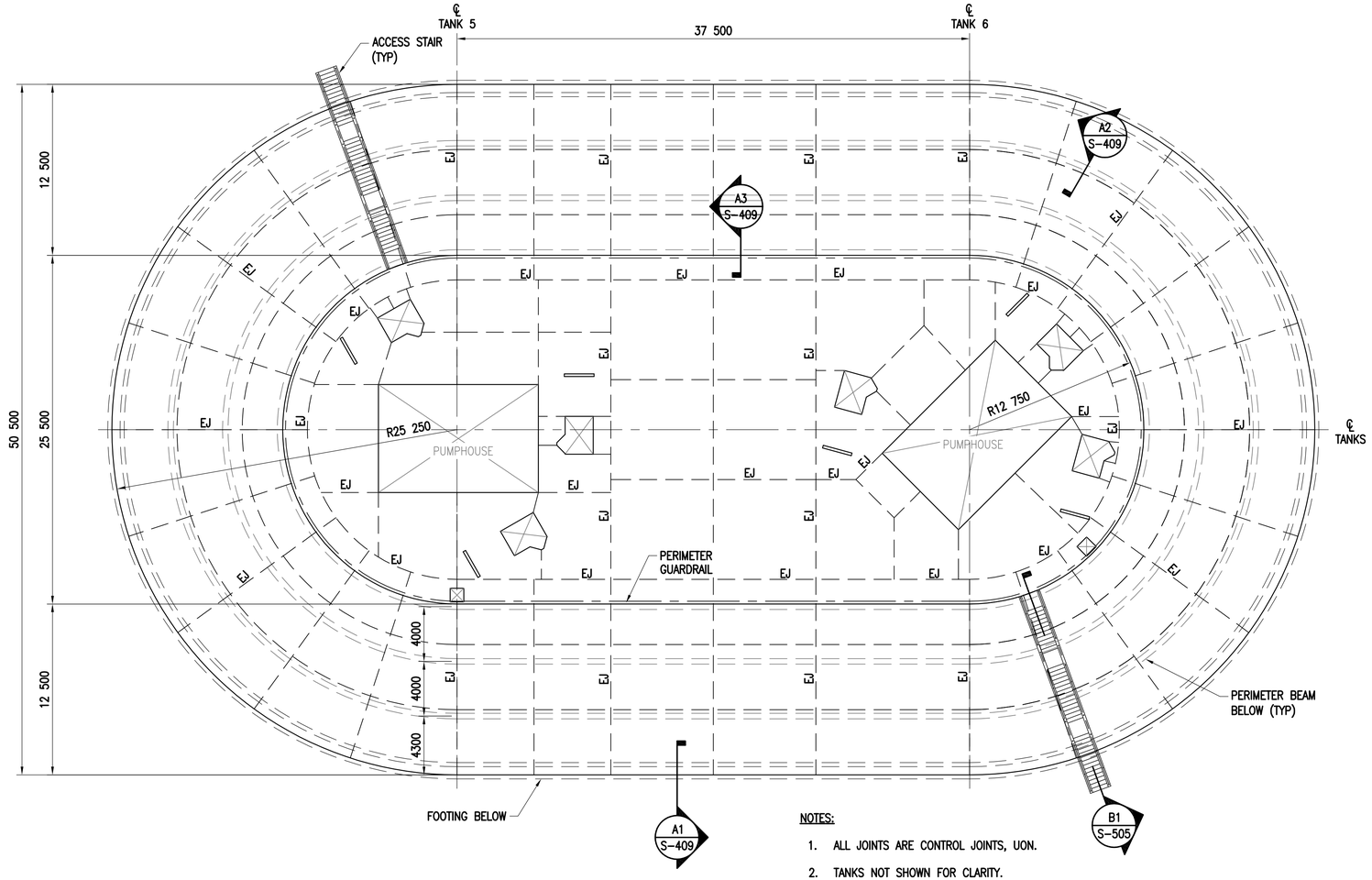

NOTES:

1. ALL JOINTS ARE CONTROL JOINTS, UON.
2. TANKS NOT SHOWN FOR CLARITY.

PLAN NORTH

CONCRETE CAP PLAN

SCALE: 1:200

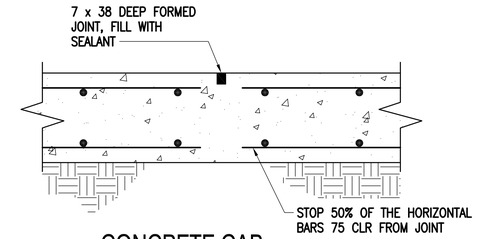

CONCRETE CAP SLAB CONTROL JOINT (CJ)

SCALE: 1:10

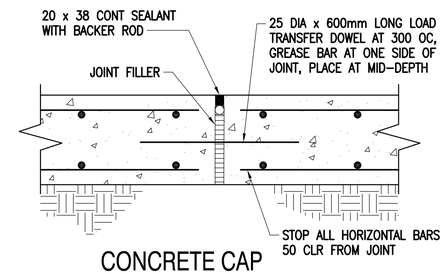

CONCRETE CAP SLAB EXPANSION JOINT (EJ)

SCALE: 1:10

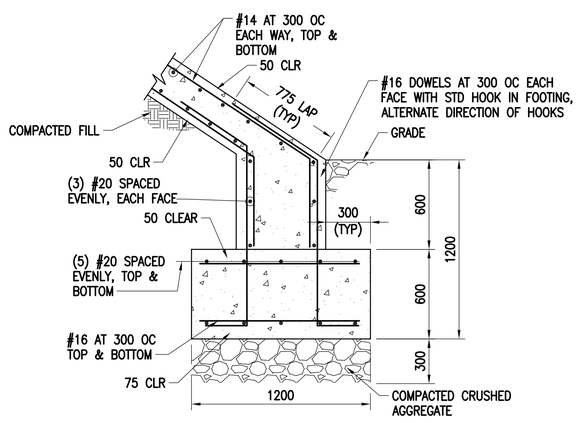

SECTION A1

SCALE: 1:20 S-409

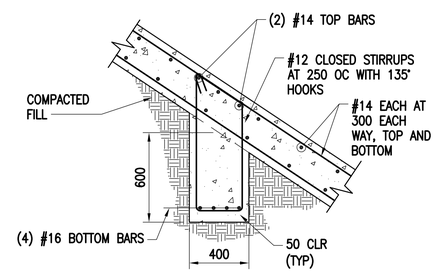

SECTION A2

SCALE: 1:20 S-409

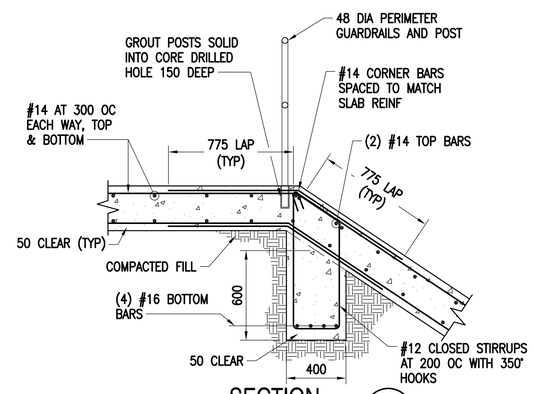

SECTION A3

SCALE: 1:20 S-409

GRAPHIC SCALE(S):

1:10 — 0, 100, 200, 500, 1000 mm

1:20 — 0, 400, 1000, 2000 mm

1:200 — 0, 4.00, 10.00, 20.00 m

APPR	DATE	DESCRIPTION	SYM

NAVFAC

COMMONWEALTH OF VIRGINIA — ANDREW C. SWENCK — Lic. No.051635 — 04-01-16 — PROFESSIONAL ENGINEER — SEAL

Austin Brockenbrough — ENGINEERING • CONSULTING

A/E INFO

APPROVED: FOR COMMANDER NAVFAC 4/07/2016

ACTIVITY

SATISFACTORY TO DATE

DES ACS DRW WMG CHK GCD

<<PM/DM>>

BRANCH MANAGER KK

CHIEF ENG/ARCH

<<XXX>> MFU

DEPARTMENT OF THE NAVY — NAVAL FACILITIES ENGINEERING COMMAND — ATLANTIC DIVISION — NAVAL FACILITIES ENGINEERING COMMAND — CAMP LEMONNIER — NORFOLK, VIRGINIA — DJIBOUTI AFRICA

DESC 1701/P-1701
CONSTRUCT FUEL STORAGE FACILITIES

TANK CONCRETE CAP PLAN & SECTIONS

SCALE: AS NOTED

PROJECT NO.:

WORK ORDER NO.

NAVFAC DRAWING NO. 14047020

SHEET 56 OF 186

S-409

DRAWFORM REVISION: 10 MARCH 2009

FILE NAME: G:\14 Jobs\14-013 Djibouti - Fuel Storage Facility - NAVFAC LANT\CAD AutoCAD\S\S-409 TANK CONCRETE CAP PLAN & SECTIONS.dwg LAYOUT NAME: TANK CONCRETE CAP PLAN & SECTIONS PLOTTED: Thursday, March 31, 2016 - 9:44am USER: wherrmann

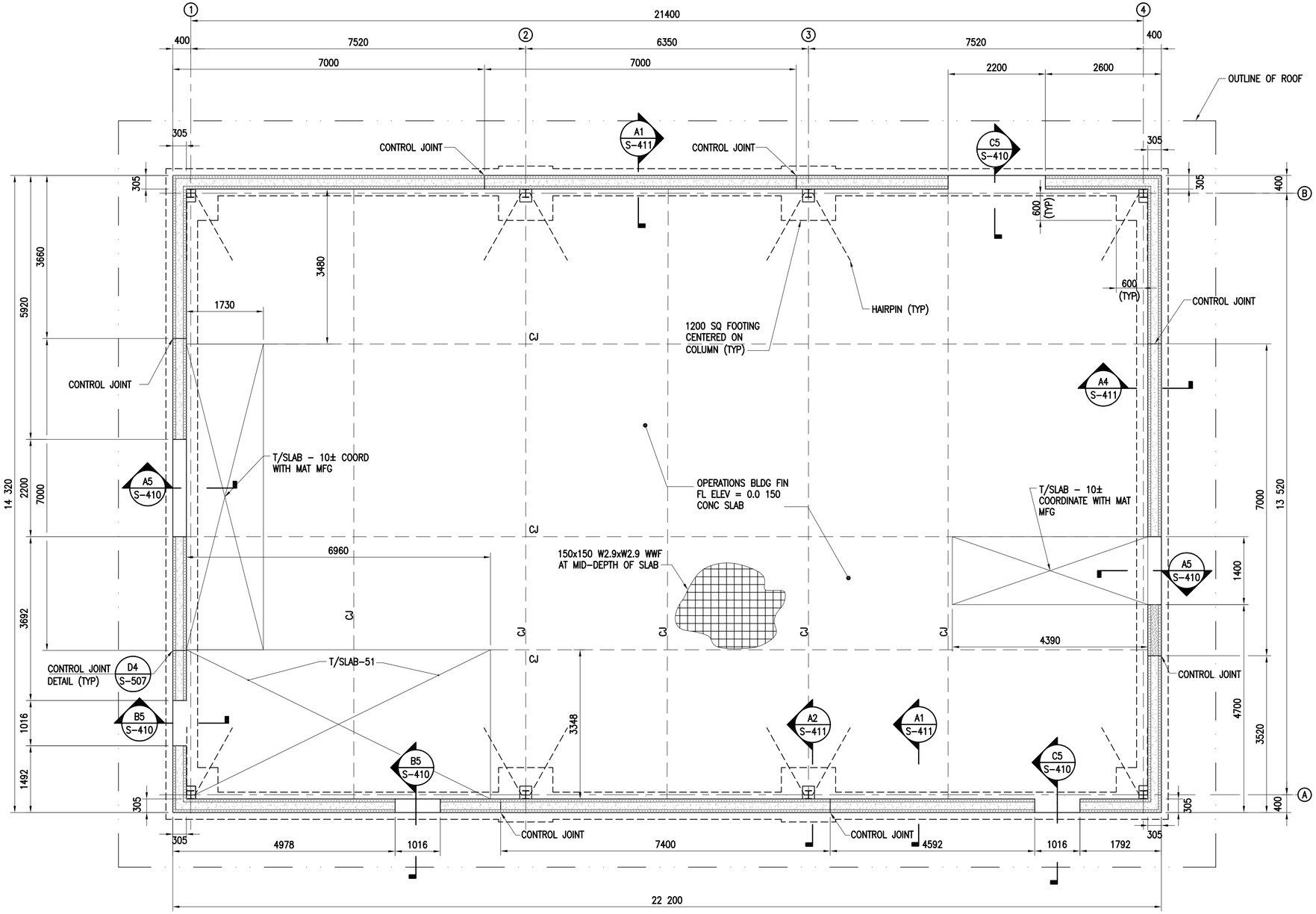

PLAN NORTH

OPERATIONS BUILDING - FOUNDATION PLAN

SCALE: 1:50

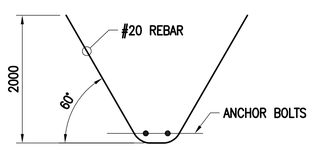

HAIRPIN DETAIL A1

SCALE: NONE S-412

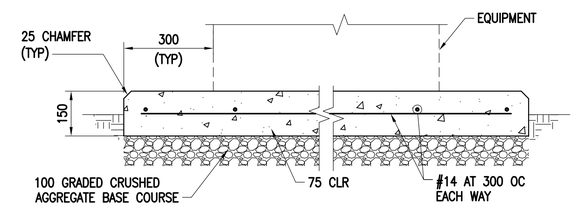

EQUIPMENT PAD DETAIL A3

SCALE: 1:10 M-409, M-410

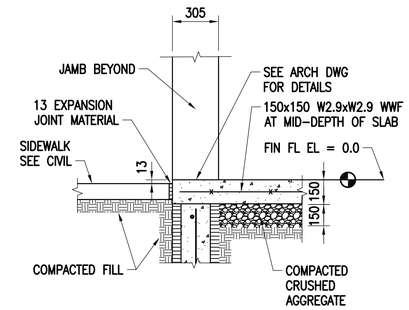

SECTION C5

SCALE: NONE S-410

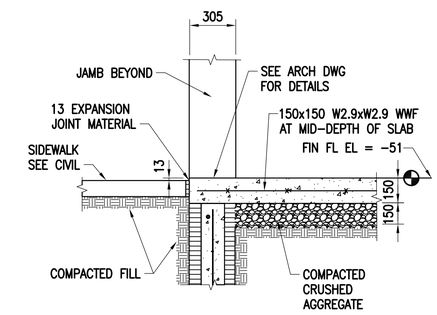

SECTION B5

SCALE: NONE S-410

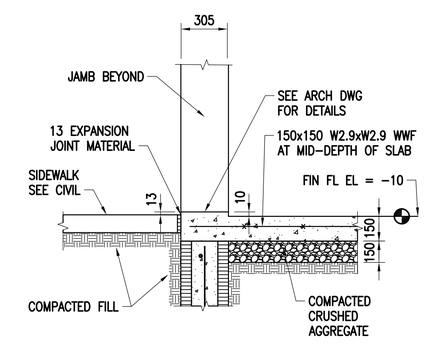

SECTION A5

SCALE: NONE S-410

GRAPHIC SCALE(S):

1:10 — 0, 100, 200, 500, 1000 mm

1:50 — 0, 1000, 2000, 5000 mm

SYM	DESCRIPTION	DATE	APPR

NAVFAC

COMMONWEALTH OF VIRGINIA
ANDREW C. SWENCK
Lic. No.051635
04-01-16
PROFESSIONAL ENGINEER
SEAL

Austin Brockenbrough
ENGINEERING • CONSULTING

A/E INFO

APPROVED
FOR COMMANDER NAVFAC 4/07/2016

ACTIVITY

SATISFACTORY TO DATE

DES ACS DRW WMG CHK GCD

<<PM/DM>>

BRANCH MANAGER KCK

CHIEF ENG/ARCH

<<XXX>> MFU

DEPARTMENT OF THE NAVY
NAVAL FACILITIES ENGINEERING COMMAND
ATLANTIC DIVISION
NAVAL FACILITIES ENGINEERING COMMAND
NORFOLK, VIRGINIA
CAMP LEMONNIER
DJIBOUTI AFRICA

DESC 1701/P-1701
CONSTRUCT FUEL STORAGE FACILITIES

OPERATIONS BUILDING FOUNDATION PLAN & SECTIONS

SCALE: AS NOTED

PROJECT NO.:

WORK ORDER NO.

NAVFAC DRAWING NO.
14047021

SHEET 57 OF 186

S-410

DRAWFORM REVISION: 10 MARCH 2009

FILE NAME: G:\14 Jobs\14-013 Djibouti - Fuel Storage Facility - NAVFAC LANT\CAD AutoCAD\S\S-410 OPERATIONS BUILDING FOUNDATION PLAN & SECTIONS.dwg LAYOUT NAME: OPERATIONS BUILDING FOUNDATION PLAN & SECTIONS PLOTTED: Thursday, March 31, 2016 - 9:44am USER: whermann

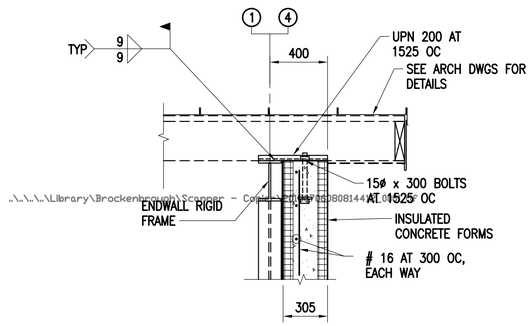

SECTION C2
SCALE: NONE S-411

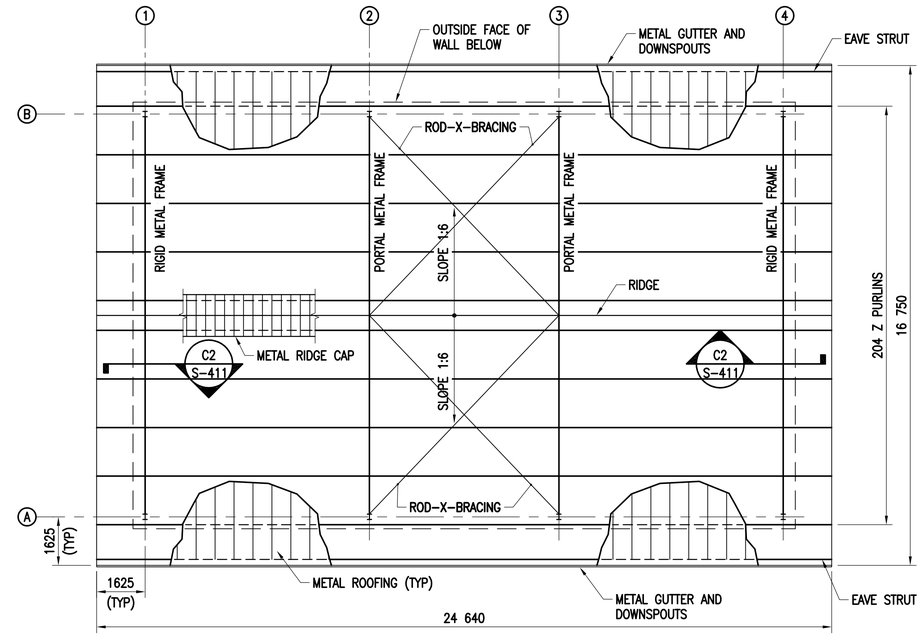

PLAN NORTH

OPERATIONS BUILDING - ROOF FRAMING PLAN
SCALE: 1:100

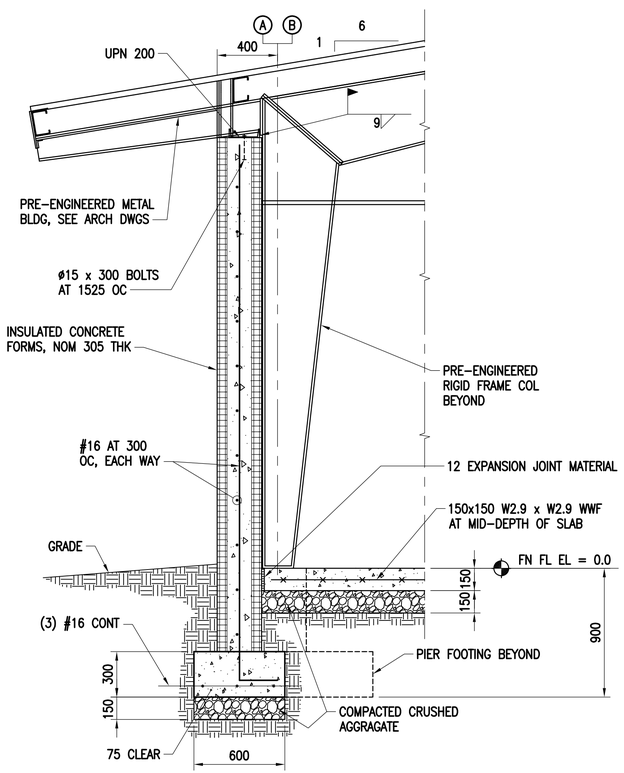

SECTION A1
SCALE: 1:20 S-410

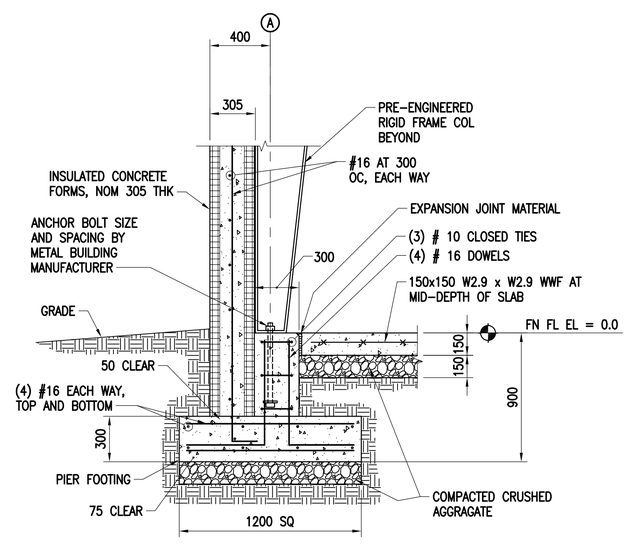

SECTION A2
SCALE: 1:20 S-410

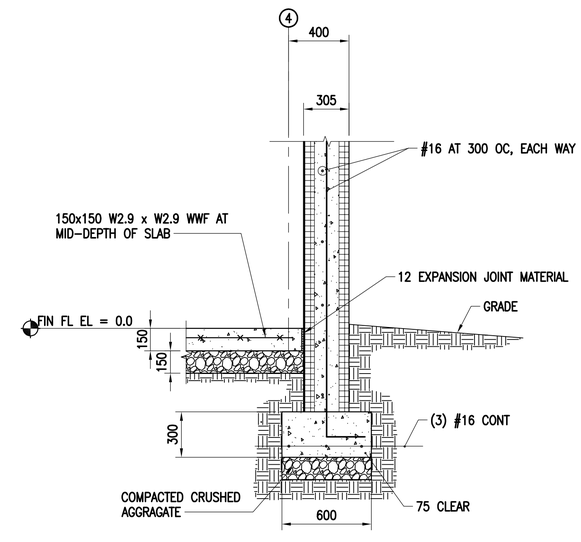

SECTION A4
SCALE: 1:20 S-410

GRAPHIC SCALE(S):

1:20 0 400 1000 2000 mm

1:100 0 2000 5000 10 000 mm

SYM	DESCRIPTION	DATE	APPR

NAVFAC

COMMONWEALTH OF VIRGINIA
ANDREW C. SWENCK
Lic. No.051635
04-01-16
PROFESSIONAL ENGINEER
SEAL

Austin Brockenbrough
ENGINEERING · CONSULTING

A/E INFO

APPROVED
FOR COMMANDER NAVFAC 4/07/2016

ACTIVITY

SATISFACTORY TO DATE

DES ACS DRW WMG CHK GCD
<<PM/DM>>
BRANCH MANAGER RCK
CHIEF ENG/ARCH
<<XXX>> MGU

DEPARTMENT OF THE NAVY
NAVAL FACILITIES ENGINEERING COMMAND
ATLANTIC DIVISION
CAMP LEMONNIER
NAVAL FACILITIES ENGINEERING COMMAND
NORFOLK, VIRGINIA
DJIBOUTI AFRICA

DESC 1701/P-1701
CONSTRUCT FUEL STORAGE FACILITIES

OPERATIONS BUILDING ROOF PLAN & SECTIONS

SCALE: AS NOTED
PROJECT NO.:
WORK ORDER NO.
NAVFAC DRAWING NO.
14047022
SHEET 58 OF 186

S-411

DRAWFORM REVISION: 10 MARCH 2009

FILE NAME: G:\14 Jobs\14-013 Djibouti - Fuel Storage Facility - NAVFAC LANT\CAD AutoCAD\S\S-411 OPERATIONS BUILDING ROOF PLAN & SECTIONS.dwg LAYOUT NAME: OPERATIONS BUILDING ROOF PLAN & SECTIONS PLOTTED: Thursday, March 31, 2016 - 9:44am USER: whermann

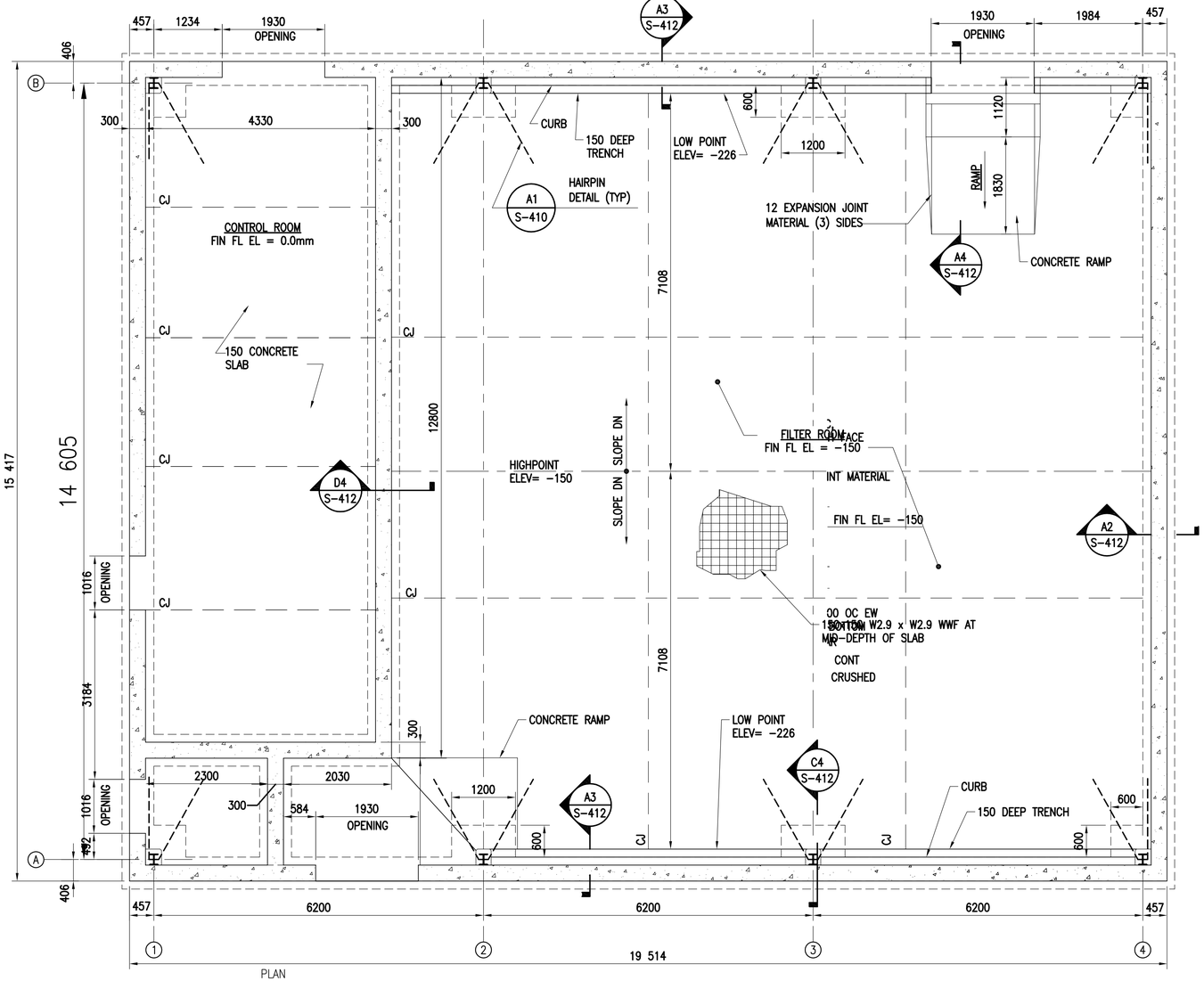

FILTER BUILDING FOUNDATION PLAN

SCALE: 1:50

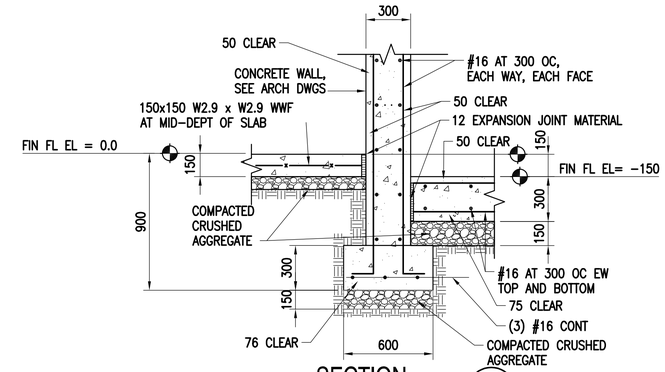

SECTION D4

SCALE: NONE S-412

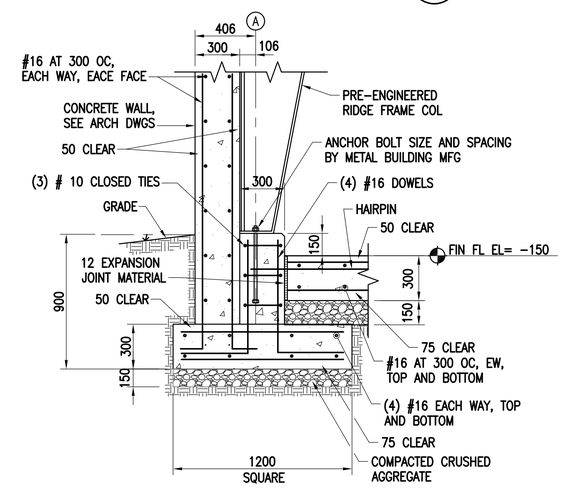

SECTION C4

SCALE: NONE S-412

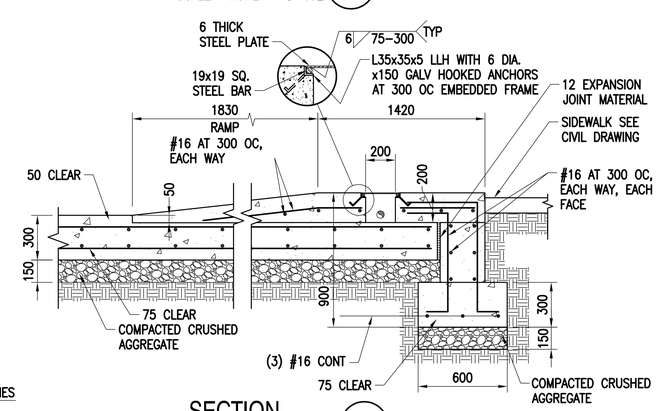

SECTION A4

SCALE: NONE S-412

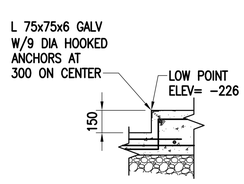

DETAIL A1

SCALE: NONE S-412

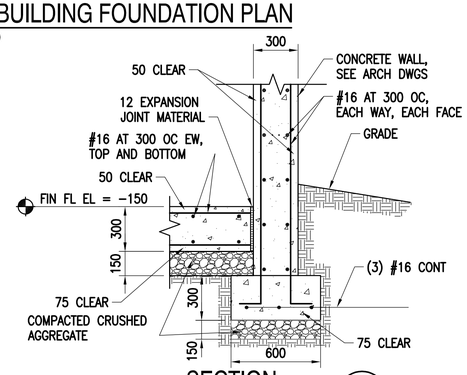

SECTION A2

SCALE: NONE S-412

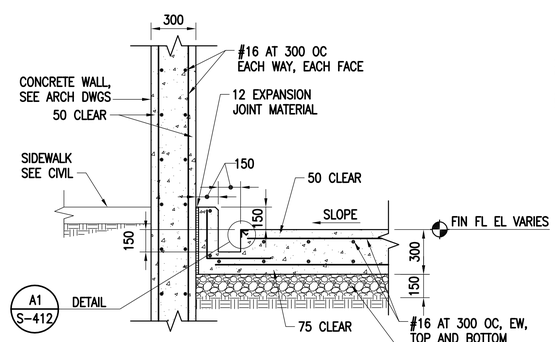

SECTION A3

SCALE: NONE S-412

GRAPHIC SCALE(S):

1:50 0 1000 2000 5000 mm

NAVFAC

COMMONWEALTH OF VIRGINIA
ANDREW C. SWENCK
Lic. No.051635
04-01-16
PROFESSIONAL ENGINEER
SEAL

Austin Brockenbrough
ENGINEERING · CONSULTING

A/E INFO

APPROVED
FOR COMMANDER NAVFAC 4/07/2016
ACTIVITY
SATISFACTORY TO DATE
DES ACS DRW WMG CHK GCD
<<PM/DM>>
BRANCH MANAGER KCK
CHIEF ENG/ARCH
<<XXX>> MGL

DEPARTMENT OF THE NAVY
NAVAL FACILITIES ENGINEERING COMMAND
NAVAL FACILITIES ENGINEERING COMMAND NORFOLK, VIRGINIA
ATLANTIC DIVISION
CAMP LEMONNIER
DJIBOUTI AFRICA

DESC 1701/P-1701
CONSTRUCT FUEL STORAGE FACILITIES

FILTER BUILDING FOUNDATION PLAN & SECTIONS

SCALE: AS NOTED
PROJECT NO.:
WORK ORDER NO.
NAVFAC DRAWING NO. 14047023
SHEET 59 OF 186
S-412

DRAWFORM REVISION: 10 MARCH 2009

FILE NAME: C:\14 Jobs\14-013 Djibouti - Fuel Storage Facility - NAVFAC LANTVCAD AutoCAD\S\S-412 FILTER BUILDING FOUNDATION PLAN & SECTIONS.dwg LAYOUT NAME: FILTER BUILDING FOUNDATION PLAN & SECTIONS PLOTTED: Thursday, March 31, 2016 - 9:45am USER: wherrmann

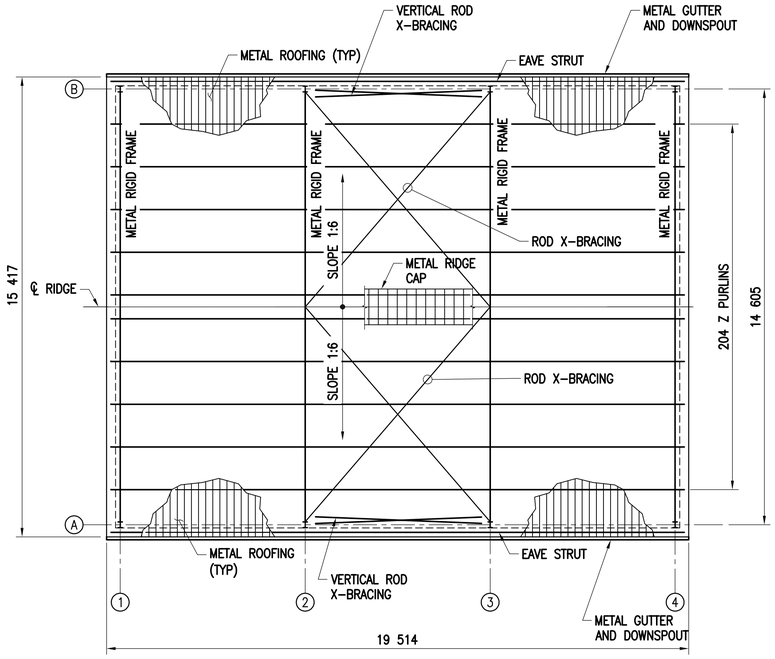

PLAN NORTH

FILTER BUILDING ROOF FRAMING PLAN

SCALE: 1:100

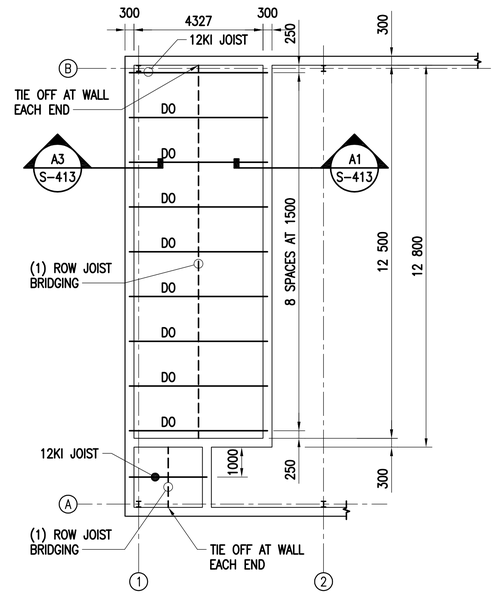

PLAN NORTH

FILTER BUILDING CONTROL ROOM ROOF FRAMING PLAN

SCALE: 1:100

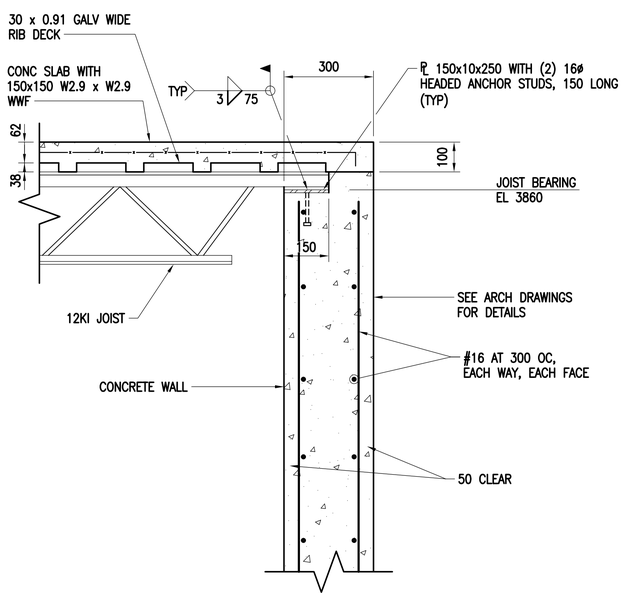

SECTION

SCALE: 1:10 S-413 A1

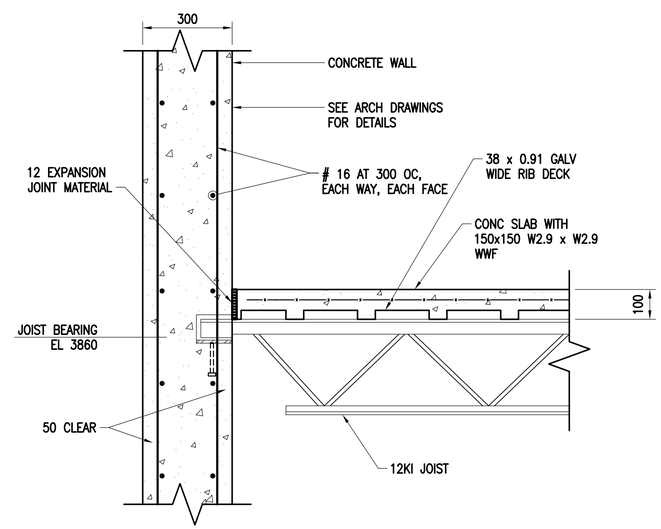

SECTION

SCALE: 1:10 S-413 A3

GRAPHIC SCALE(S):

1:10 — 0 100 200 500 1000 mm

1:100 — 0 2000 5000 10 000 mm

SYM	DESCRIPTION	DATE	APPR

NAVFAC

COMMONWEALTH OF VIRGINIA
ANDREW C. SWENCK
Lic. No.051635
04-01-16
PROFESSIONAL ENGINEER
SEAL

Austin Brockenbrough
ENGINEERING · CONSULTING

A/E INFO.

APPROVED:
FOR COMMANDER NAVFAC 4/07/2016

ACTIVITY

SATISFACTORY TO DATE

DES ACS DRW WMG CHK GCD

<<PM/DM>>

BRANCH MANAGER TCK

CHIEF ENG/ARCH

<<XXX>> MFU

DEPARTMENT OF THE NAVY
NAVAL FACILITIES ENGINEERING COMMAND
ATLANTIC DIVISION
NAVAL FACILITIES ENGINEERING COMMAND
NORFOLK, VIRGINIA
CAMP LEMONNIER
DJIBOUTI AFRICA

DESC 1701/P-1701
CONSTRUCT FUEL STORAGE FACILITIES

FILTER BUILDING ROOF PLAN & SECTIONS

SCALE: AS NOTED

PROJECT NO.:

WORK ORDER NO.

NAVFAC DRAWING NO.
14047024

SHEET 60 OF 186

S-413

DRAWFORM REVISION: 10 MARCH 2009

FILE NAME: G:\14 Jobs\14-013 Djibouti - Fuel Storage Facility - NAVFAC CANT\CAD AutoCAD\S\S-413 FILTER BUILDING ROOF PLAN & SECTIONS.dwg LAYOUT NAME: FILTER BUILDING ROOF PLAN & SECTIONS PLOTTED: Thursday, March 31, 2016 - 9:45am USER: whermann

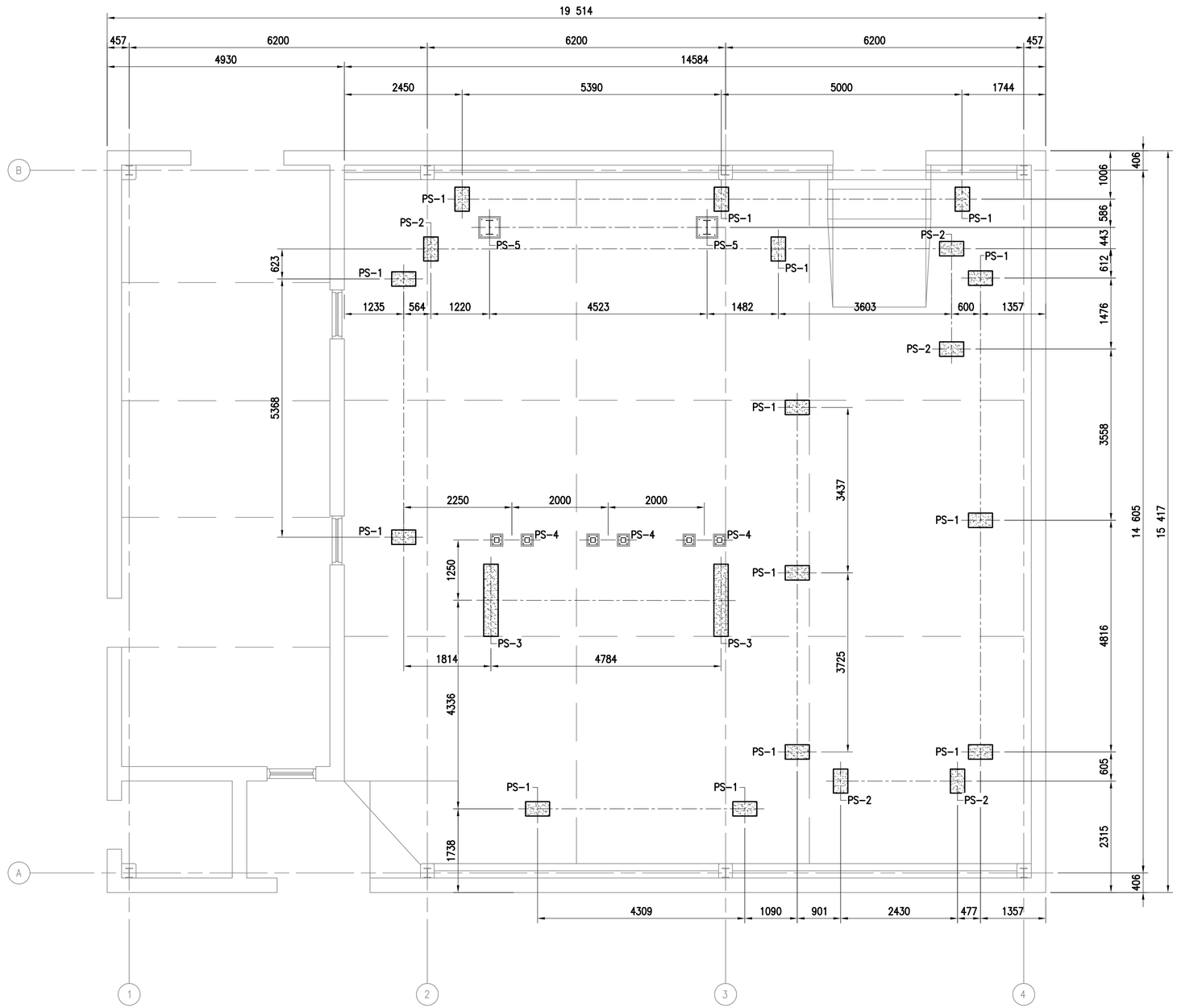

NOTE:
SEE SHEET S-509 FOR PIPE SUPPORT DETAILS.

PLAN NORTH

FILTER BUILDING PIPE SUPPORT PLAN

SCALE: 1:50

GRAPHIC SCALE(S):

1:50 0 1000 2000 5000 mm

SYM	DESCRIPTION	DATE	APPR

NAVFAC

COMMONWEALTH OF VIRGINIA
ANDREW C. SWENCK
Lic. No.051635
04-01-16
PROFESSIONAL ENGINEER
SEAL

Austin Brockenbrough
ENGINEERING • CONSULTING

A/E INFO

APPROVED
FOR COMMANDER NAVFAC 4/07/2016
ACTIVITY
SATISFACTORY TO DATE

DES ACS DRW WMG CHK GCD
<<PM/DM>> TCK
BRANCH MANAGER
CHIEF ENG/ARCH MGU
<<XXX>>

DEPARTMENT OF THE NAVY
NAVAL FACILITIES ENGINEERING COMMAND
ATLANTIC DIVISION
CAMP LEMONNIER
NAVAL FACILITIES ENGINEERING COMMAND
NORFOLK, VIRGINIA
DJIBOUTI AFRICA
DESC 1701/P-1701
CONSTRUCT FUEL STORAGE FACILITIES
FILTER BUILDING PIPE SUPPORT PLAN

SCALE: AS NOTED
PROJECT NO.:
WORK ORDER NO.
NAVFAC DRAWING NO.
14047025
SHEET 61 OF 186
S-414

DRAWFORM REVISION: 10 MARCH 2009

FILE NAME: G:\14 Jobs\14-013 Djibouti - Fuel Storage Facility - NAVFAC LANT\CAD AutoCAD\S\S-414 FILTER BUILDING PIPE SUPPORT PLAN.dwg LAYOUT NAME: FILTER BUILDING PIPE SUPPORT PLAN PLOTTED: Thursday, March 31, 2016 - 9:45am USER: wehermann

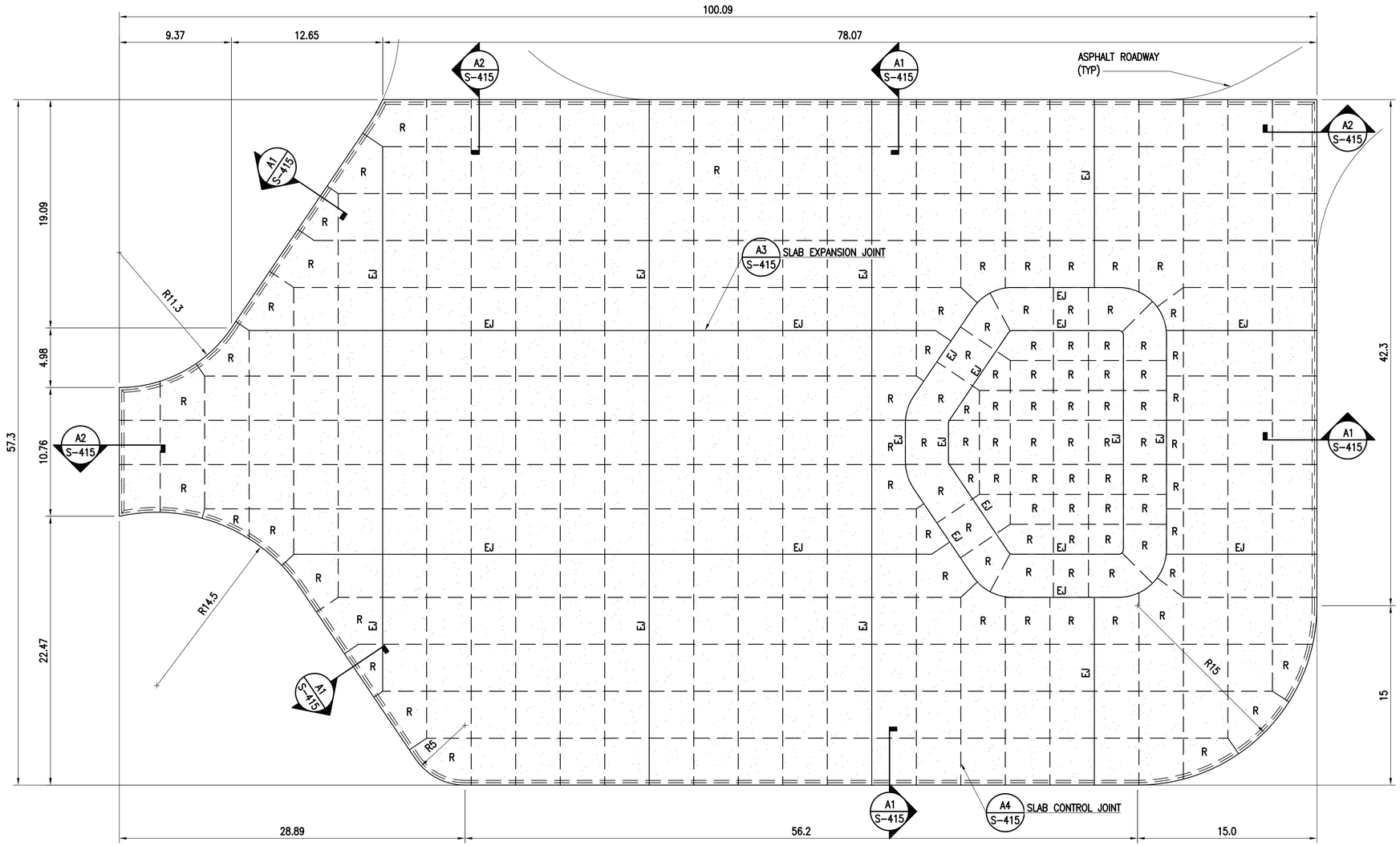

PLAN NORTH

TRUCK PARKING PLAN

SCALE: 1:200

NOTES:

1. ALL JOINTS SHOWN ARE CONTROL JOINTS, UNLESS OTHERWISE NOTED. SEE DETAILS THIS SHEET.
2. SEE CIVIL SHEETS FOR SLAB SLOPES AND ELEVATIONS.
3. ALL DIMENSIONS WITHOUT A DECIMAL POINT ARE MILLIMETERS, AND ALL THOSE WITH A DECIMAL POINT ARE METERS, UNLESS OTHERWISE NOTED.
4. SLABS LABELED 'R' SHALL BE REINFORCED WITH #14 BARS SPACED 300 OC AT MID-DEPTH, EACH WAY.

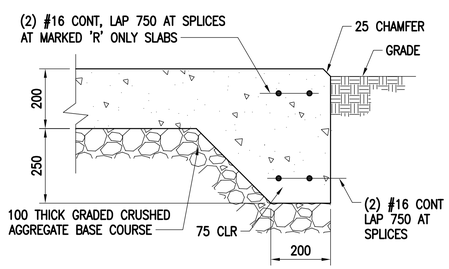

SECTION A1

SCALE: 1:10 S-415 S-416

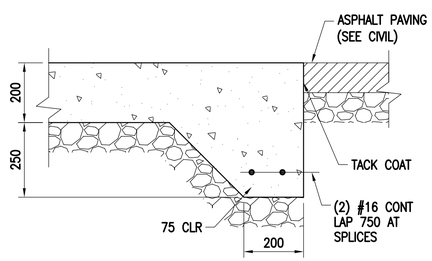

SECTION A2

SCALE: 1:10 S-415

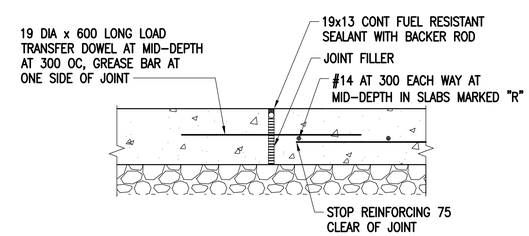

SLAB EXPANSION JOINT A3

SCALE: 1:10 S-415

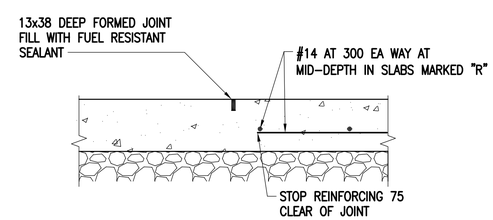

SLAB CONTROL JOINT A4

SCALE: 1:10 S-415

GRAPHIC SCALE(S):

1:200 — 0, 4.00, 10.00, 20.00 m

1:10 — 0, 100, 200, 500, 1000 mm

APPR | DATE | DESCRIPTION | SYM

NAVFAC

COMMONWEALTH OF VIRGINIA
ANDREW C. SWENCK
Lic. No.051635
04-01-16
PROFESSIONAL ENGINEER
SEAL

Austin Brockenbrough
ENGINEERING • CONSULTING

A/E INFO

APPROVED
FOR COMMANDER NAVFAC 4/07/2016

ACTIVITY

SATISFACTORY TO DATE

DES ACS DRW WMG CHK GCD
<<PM/DM>>
BRANCH MANAGER KCK
CHIEF ENG/ARCH
<<XXX>> MGR

DEPARTMENT OF THE NAVY
NAVAL FACILITIES ENGINEERING COMMAND
ATLANTIC DIVISION
CAMP LEMONNIER
NAVAL FACILITIES ENGINEERING COMMAND
NORFOLK, VIRGINIA
DJIBOUTI AFRICA

DESC 1701/P-1701
CONSTRUCT FUEL STORAGE FACILITIES

TRUCK PARKING PLAN & SECTIONS

SCALE: AS NOTED
PROJECT NO.:
WORK ORDER NO.
NAVFAC DRAWING NO. 14047026
SHEET 62 OF 186

S-415

DRAWFORM REVISION: 10 MARCH 2009

FILE NAME: G:\14 Jobs\14-013 Djibouti - Fuel Storage Facility - NAVFAC LANT\CAD AutoCAD\S\S-415 TRUCK PARKING PLAN & SECTIONS.dwg LAYOUT NAME: TRUCK PARKING PLAN & SECTIONS PLOTTED: Thursday, March 31, 2016 - 9:46am USER: whermann

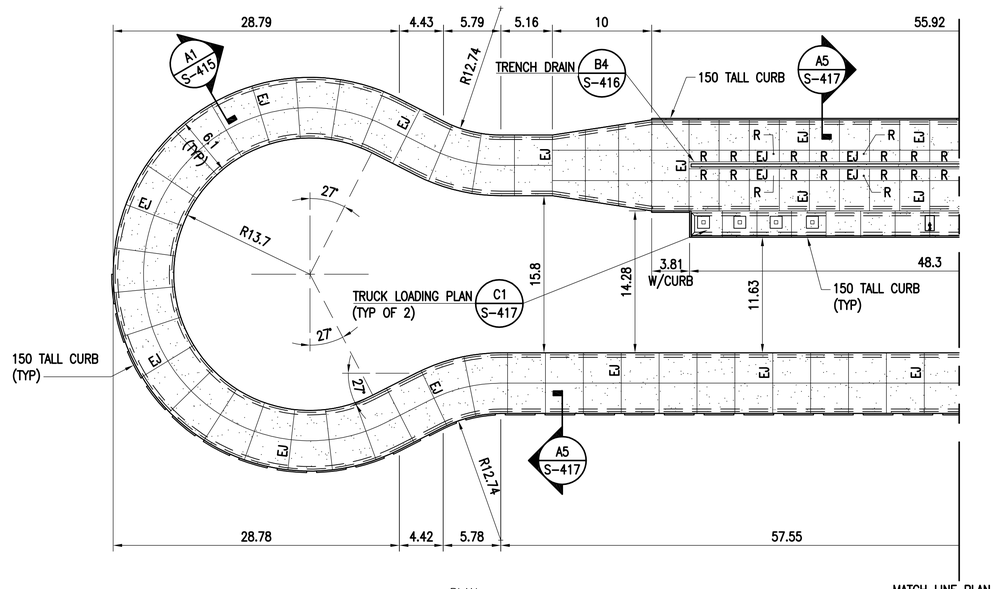

PLAN NORTH

PLAN
SCALE: 1:300 S-416 C1

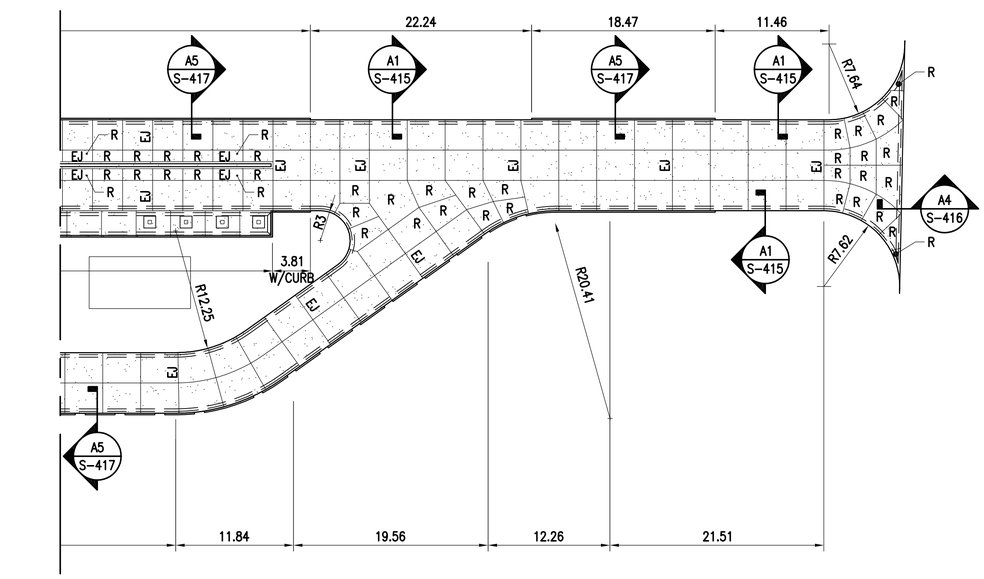

PLAN NORTH

PLAN
SCALE: 1:300 S-416 A1

NOTES:

1. ALL JOINTS SHOWN ARE CONTROL JOINTS, UNLESS OTHERWISE NOTED. SEE DETAILS ON SHEET S-415.
2. SEE CIVIL SHEETS FOR SLAB SLOPES AND ELEVATIONS.
3. ALL DIMENSIONS WITHOUT A DECIMAL POINT ARE MILLIMETERS, AND ALL THOSE WITH A DECIMAL POINT ARE METERS, UNLESS OTHERWISE NOTED.
4. SLABS LABELED 'R' SHALL BE REINFORCED WITH #14 BARS SPACED 300 OC AT MID-DEPTH, EACH WAY.

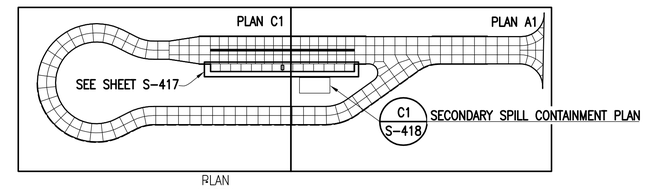

PLAN NORTH

KEY PLAN
SCALE: NONE

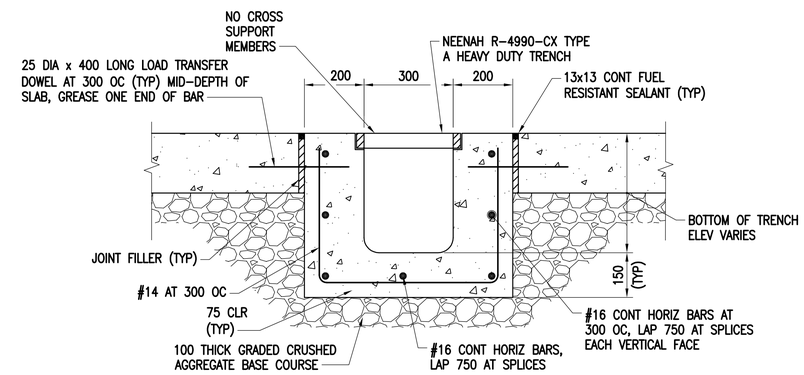

TRENCH DRAIN
SCALE: 1:10 S-416 B4

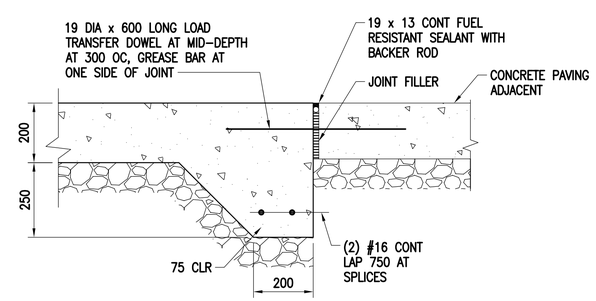

SECTION
SCALE: 1:10 S-416 A4

GRAPHIC SCALE(S):

1:300 0 10.00 20.00 30.00 m

1:10 0 100 200 500 1000 mm

SYM	DESCRIPTION	DATE	APPR

NAVFAC

COMMONWEALTH OF VIRGINIA
ANDREW C. SWENCK
Lic. No.051635
04-01-16
PROFESSIONAL ENGINEER
SEAL

Austin Brockenbrough
ENGINEERING · CONSULTING

A/E INFO

APPROVED
FOR COMMANDER NAVFAC 4/07/2016
ACTIVITY
SATISFACTORY TO DATE
DES ACS DRW WMG CHK GCD
<<PM/DM>>
BRANCH MANAGER RCK
CHIEF ENG/ARCH
<<XXX>> MGL

DEPARTMENT OF THE NAVY
NAVAL FACILITIES ENGINEERING COMMAND
ATLANTIC DIVISION
NAVAL FACILITIES ENGINEERING COMMAND
NORFOLK, VIRGINIA
CAMP LEMONNIER
DJIBOUTI AFRICA

DESC 1701/P-1701
CONSTRUCT FUEL STORAGE FACILITIES

TRUCK LOADING PLAN

SCALE: AS NOTED
PROJECT NO.:
WORK ORDER NO.
NAVFAC DRAWING NO.
14047027
SHEET 63 OF 186
S-416

DRAWFORM REVISION: 10 MARCH 2009

FILE NAME: G:\14 Jobs\14-013 Djibouti - Fuel Storage Facility - NAVFAC LANT\CAD AutoCAD\S\S-416 TRUCK LOADING PLAN.dwg LAYOUT NAME: TRUCK LOADING PLAN PLOTTED: Thursday, March 31, 2016 - 9:46am USER: wherrmann

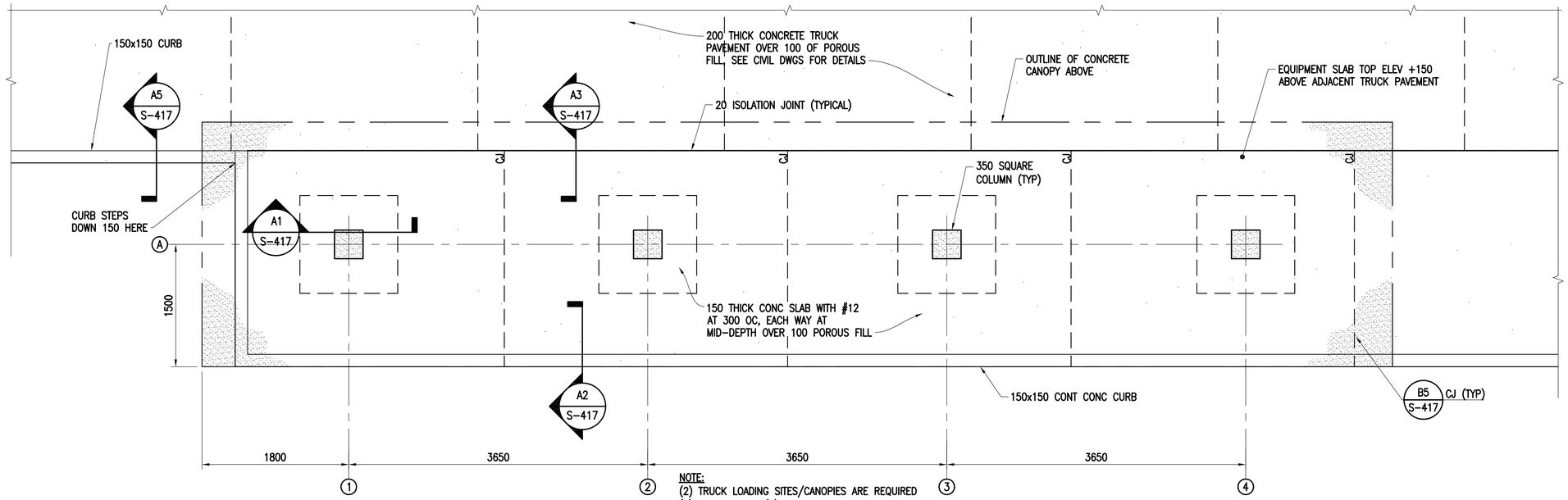

NOTE:
(2) TRUCK LOADING SITES/CANOPIES ARE REQUIRED
(1) AS SHOWN & (1) OPPOSITE HAND

PLAN NORTH

TRUCK LOADING PLAN
SCALE: 1:30 S-416 C1

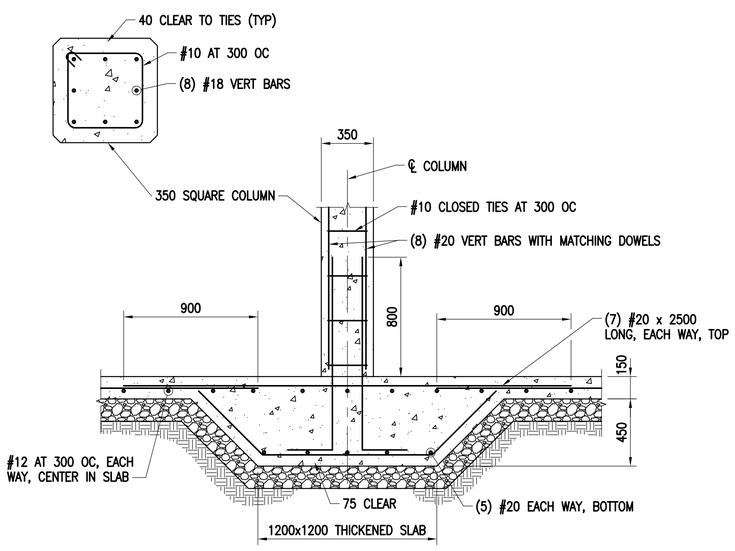

SECTION
SCALE: 1:20 S-417 A1

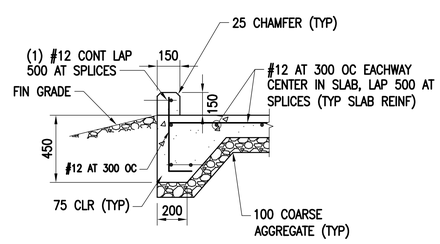

SECTION
SCALE: 1:20 S-417 A2

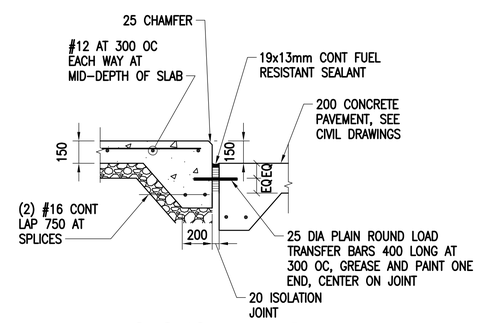

SECTION
SCALE: 1:20 S-417 A3

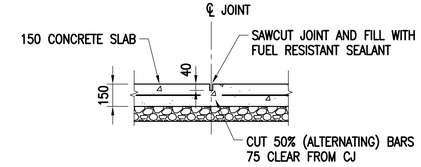

CONTROL JOINT (CJ)
SCALE: NONE S-417 B5

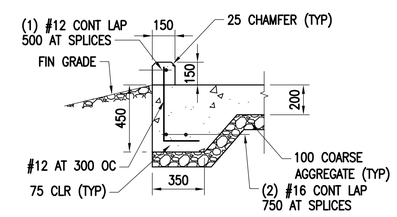

SECTION
SCALE: 1:20 S-416 S-417 A5

GRAPHIC SCALE(S):
1:20 0 400 1000 2000 mm
1:30 0 1000 2000 3000 mm

SYM	DESCRIPTION	DATE	APPR

NAVFAC

COMMONWEALTH OF VIRGINIA
ANDREW C. SWENCK
Lic. No.051635
04-01-16
PROFESSIONAL ENGINEER
SEAL

Austin Brockenbrough
ENGINEERING • CONSULTING

A/E INFO

APPROVED
FOR COMMANDER NAVFAC 4/07/2016
ACTIVITY
SATISFACTORY TO DATE
DES ACS DRW WMG CHK GCD
<<PM/DM>>
BRANCH MANAGER KCK
CHIEF ENG/ARCH
<<XXX>> MFU

DEPARTMENT OF THE NAVY
NAVAL FACILITIES ENGINEERING COMMAND
NORFOLK, VIRGINIA
ATLANTIC DIVISION
CAMP LEMONNIER
DJIBOUTI AFRICA

DESC 1701/P-1701
CONSTRUCT FUEL STORAGE FACILITIES

TRUCK LOADING FOUNDATION PLAN & SECTIONS

SCALE: AS NOTED
PROJECT NO.:
WORK ORDER NO.
NAVFAC DRAWING NO. 14047028
SHEET 64 OF 186
S-417

DRAWFORM REVISION: 10 MARCH 2009

FILE NAME: G:\14 Jobs\14-013 Djibouti - Fuel Storage Facility - NAVFAC LANT\CAD AutoCAD\S\S-417 TRUCK LOADING FOUNDATION PLAN & SECTIONS.dwg LAYOUT NAME: TRUCK LOADING FOUNDATION PLAN & SECTIONS PLOTTED: Thursday, March 31, 2016 - 9:46am USER: wherrmann

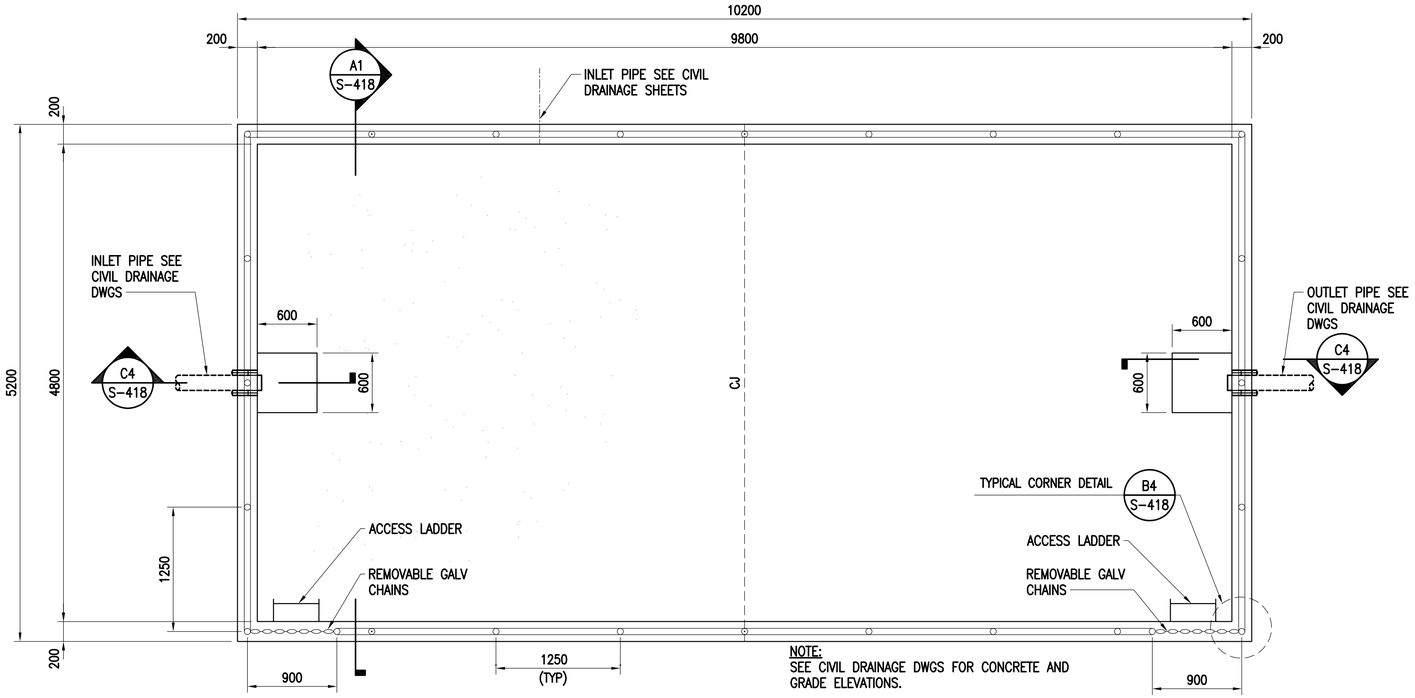

SECONDARY SPILL CONTAINMENT PLAN C1
SCALE: 1:30 S-416

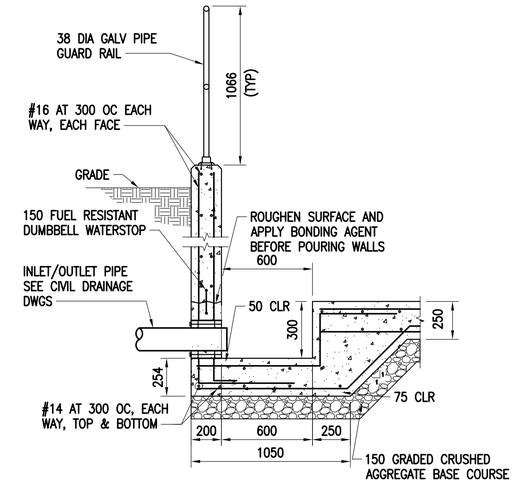

SECTION C4
SCALE: 1:20 S-418

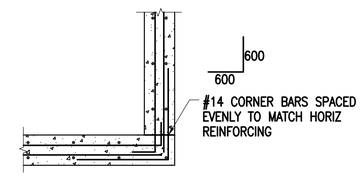

TYPICAL CORNER DETAIL B4
SCALE: 1:20 S-418

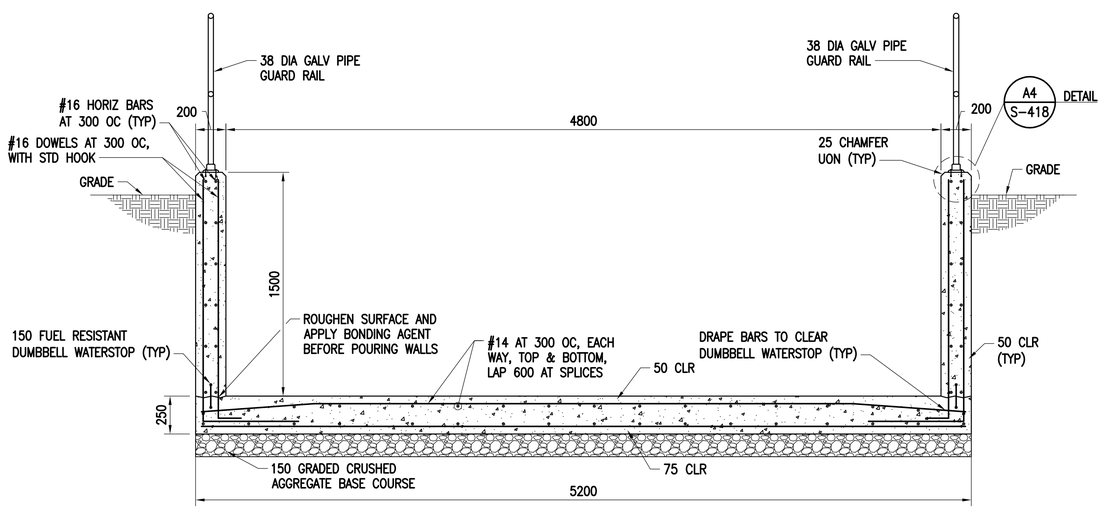

SECTION A1
SCALE: 1:20 S-418

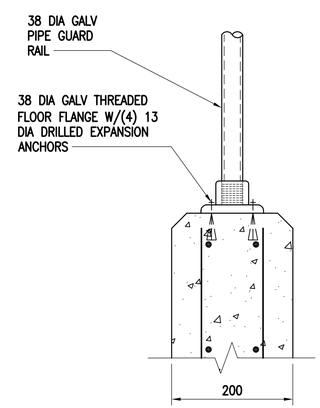

DETAIL A4
SCALE: NONE S-418

GRAPHIC SCALE(S):

1:20 0 400 1000 2000 mm
1:30 0 1000 2000 3000 mm
1:5 0 50 100 200 500 mm

SYM	DESCRIPTION	DATE	APPR

NAVFAC

COMMONWEALTH OF VIRGINIA
ANDREW C. SWENCK
Lic. No.051635
04-01-16
PROFESSIONAL ENGINEER
SEAL

Austin Brockenbrough
ENGINEERING • CONSULTING
A/E INFO

APPROVED
FOR COMMANDER NAVFAC 4/07/2016
ACTIVITY
SATISFACTORY TO DATE
DES ACS DRW WMG CHK GCD
<<PM/DM>>
BRANCH MANAGER RCK
CHIEF ENG/ARCH
<<XXX>> MJU

DEPARTMENT OF THE NAVY
NAVAL FACILITIES ENGINEERING COMMAND
ATLANTIC DIVISION
NAVAL FACILITIES ENGINEERING COMMAND
NORFOLK, VIRGINIA
CAMP LEMONNIER
DJIBOUTI AFRICA

DESC 1701/P-1701
CONSTRUCT FUEL STORAGE FACILITIES
TRUCK LOADING SPILL CONTAINMENT STRUCTURE PLAN & DETAILS

SCALE: AS NOTED
PROJECT NO.:
WORK ORDER NO.
NAVFAC DRAWING NO. 14047029
SHEET 65 OF 186
S-418
DRAWFORM REVISION: 10 MARCH 2009

FILE NAME: G:\14 Jobs\14-013 Djibouti - Fuel Storage Facility - NAVFAC LANT\CAD AutoCAD\S\S-418 TRUCK LOADING SPILL CONTAINMENT STRUCTURE PLAN & DETAILS.dwg LAYOUT NAME: TRUCK LOADING SPILL CONTAINMENT STRUCTURE PLAN & DETAILS PLOTTED: Thursday, March 31, 2016 - 9:46am USER: wherrmann

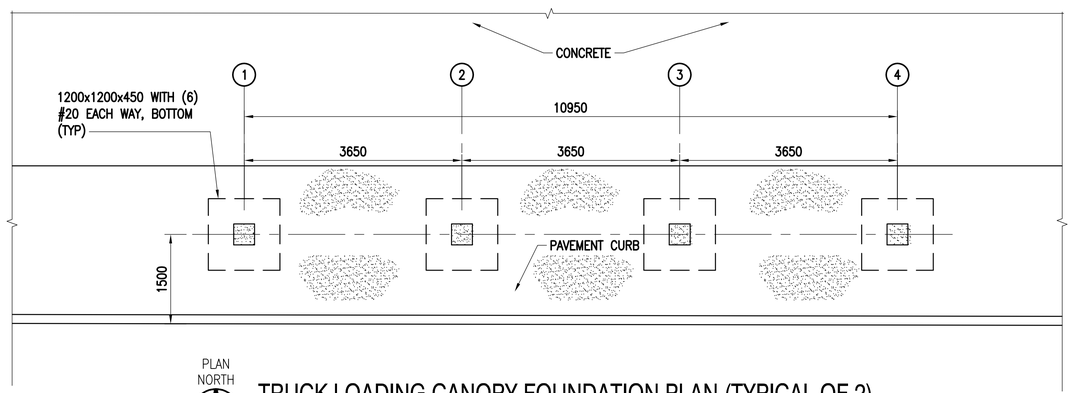

PLAN NORTH

TRUCK LOADING CANOPY FOUNDATION PLAN (TYPICAL OF 2)

SCALE: 1:50

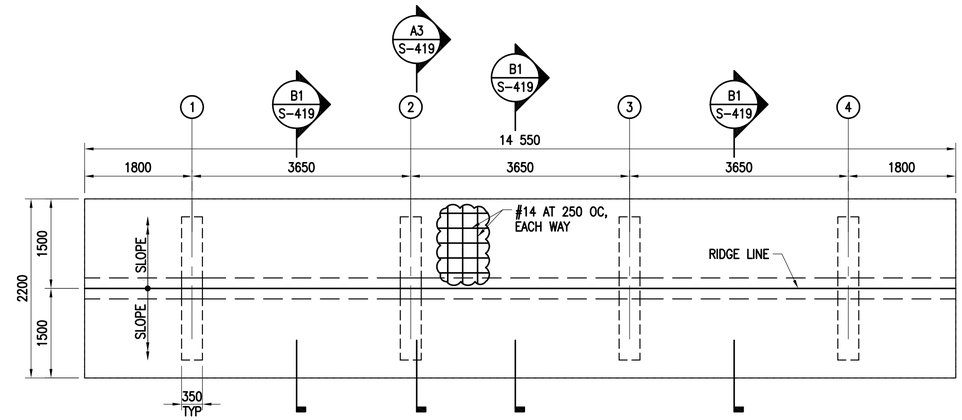

PLAN NORTH

CANOPY ROOF FRAMING PLAY TYPICAL OF (2)

SCALE: 1:50

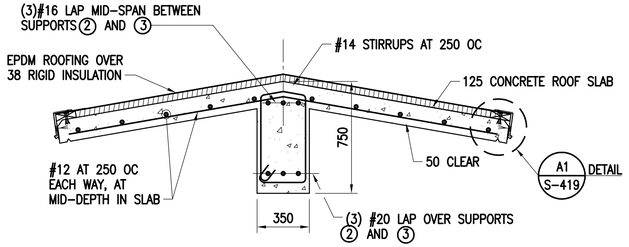

SECTION

SCALE: 1:20 S-419 B1

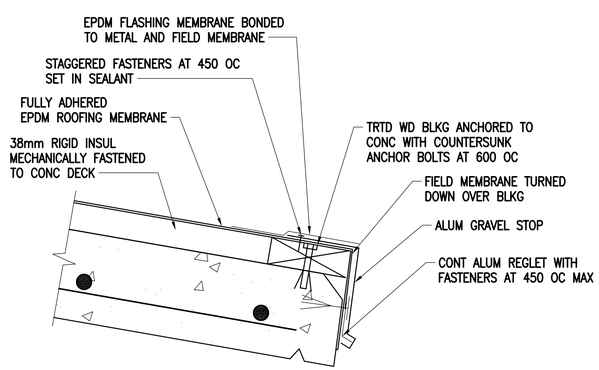

DETAIL

SCALE: 1:5 S-419 A1

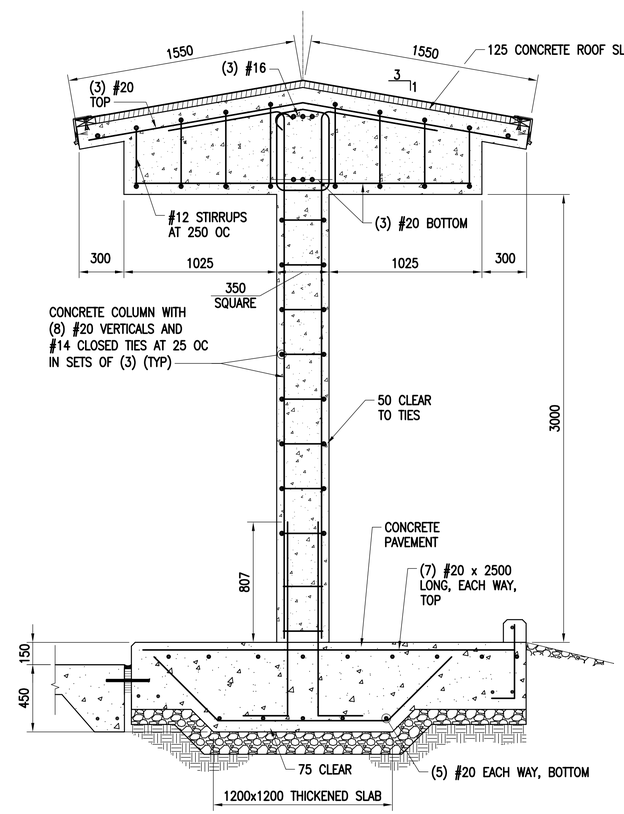

SECTION

SCALE: 1:20 S-419 A3

GRAPHIC SCALE(S):

1:50 — 0, 1000, 2000, 5000 mm

1:20 — 0, 400, 1000, 2000 mm

1:5 — 0, 50, 100, 200, 500 mm

SYM	DESCRIPTION	DATE	APPR

NAVFAC

COMMONWEALTH OF VIRGINIA
ANDREW C. SWENCK
Lic. No.051635
04-01-16
PROFESSIONAL ENGINEER
SEAL

Austin Brockenbrough
ENGINEERING • CONSULTING

A/E INFO

APPROVED
FOR COMMANDER NAVFAC 4/27/2016

ACTIVITY

SATISFACTORY TO DATE

DES ACS DRW WMG CHK GCD

<<PM/DM>>

BRANCH MANAGER TCK

CHIEF ENG/ARCH

<<XXX>> MFU

DEPARTMENT OF THE NAVY
NAVAL FACILITIES ENGINEERING COMMAND
ATLANTIC DIVISION
CAMP LEMONNIER
NAVAL FACILITIES ENGINEERING COMMAND
NORFOLK, VIRGINIA
DJIBOUTI AFRICA

DESC 1701/P-1701
CONSTRUCT FUEL STORAGE FACILITIES

TRUCK LOADING CANOPY PLAN

SCALE: AS NOTED

PROJECT NO.:

WORK ORDER NO.

NAVFAC DRAWING NO.
14047030

SHEET 66 OF 186

S-419

DRAWFORM REVISION: 10 MARCH 2009

FILE NAME: G:\14 Jobs\14-013 Djibouti - Fuel Storage Facility - NAVFAC CANT\CAD AutoCAD\S\S-419 TRUCK LOADING CANOPY PLAN.dwg LAYOUT NAME: TRUCK LOADING CANOPY PLAN PLOTTED: Thursday, March 31, 2016 - 9:47am USER: wthermonn

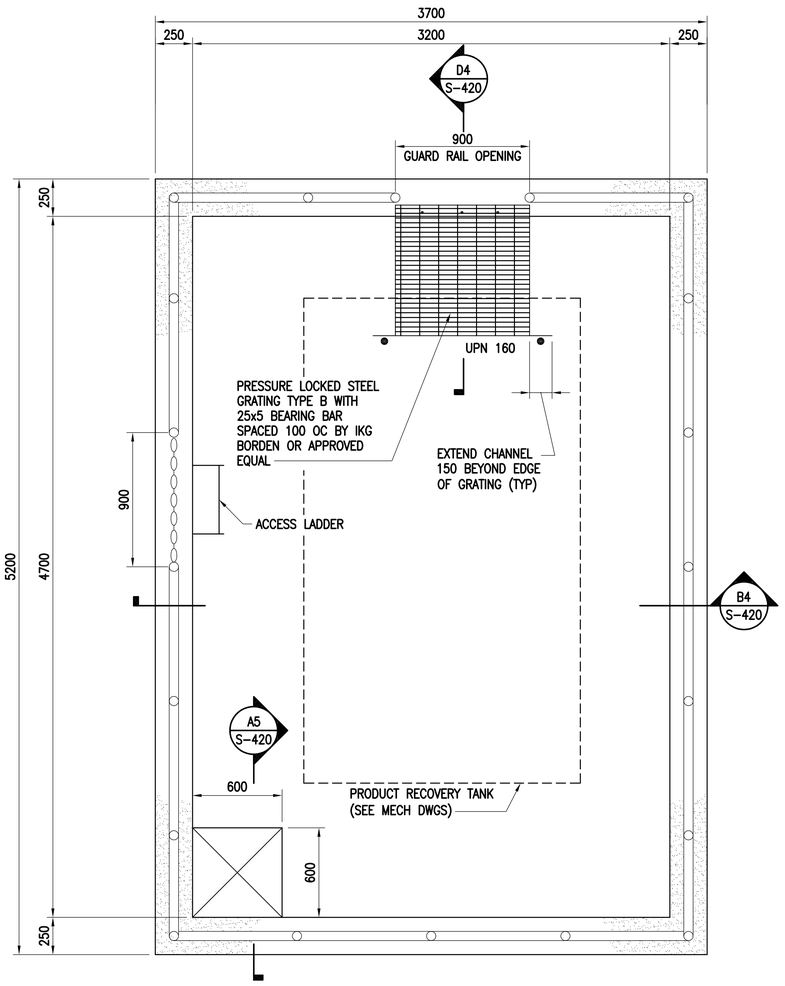

RECOVERY TANK PIT FOUNDATION PLAN (B1)
SCALE: 1:20

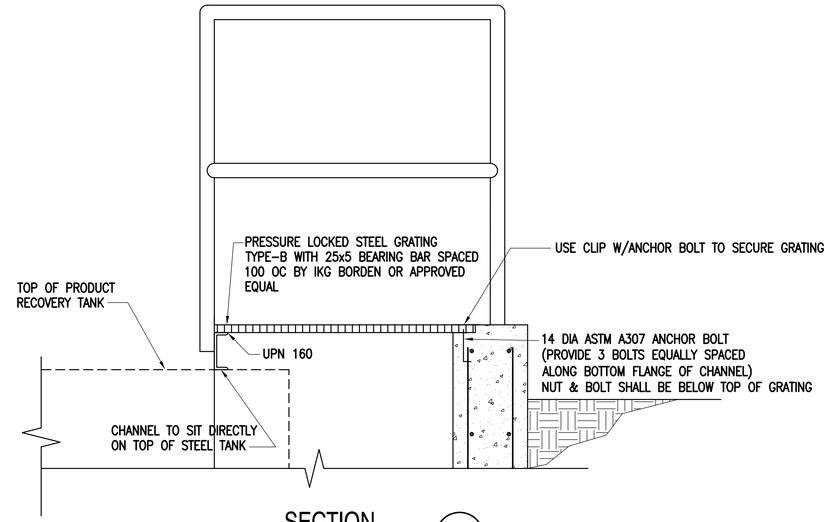

SECTION (D4)
SCALE: 1:10 S-420

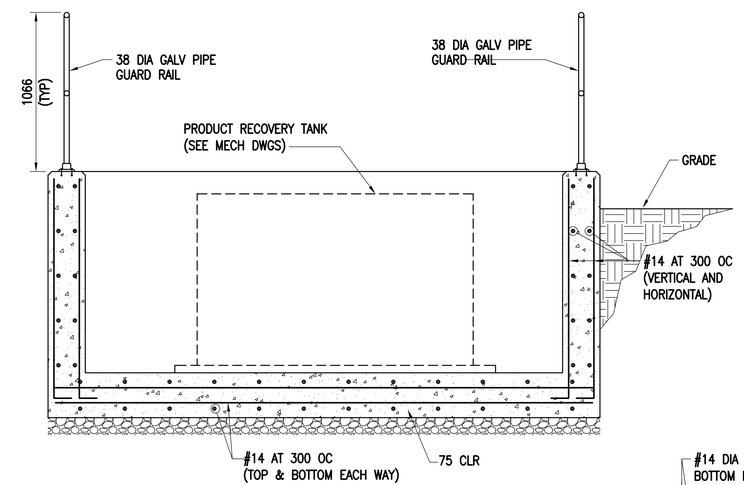

SECTION (B4)
SCALE: 1:20 S-420

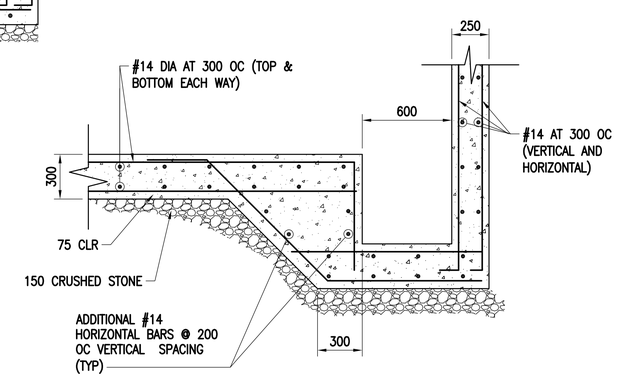

SECTION (A5)
SCALE: 1:20 S-420

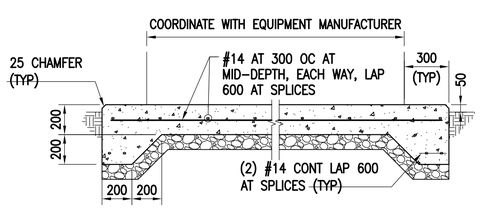

ELECTRICAL GENERATOR PAD DETAIL (A1)
SCALE: 1:20 E-102, E-103

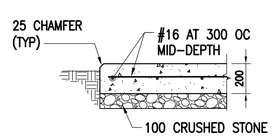

TRANSFORMER PAD SECTION (A2)
SCALE: 1:20 E-503

GRAPHIC SCALE(S):

1:10 — 0 100 200 500 1000 mm

1:20 — 0 400 1000 2000 mm

SYM	DESCRIPTION	DATE	APPR

NAVFAC

COMMONWEALTH OF VIRGINIA — ANDREW C. SWENCK — Lic. No.051635 — 04-01-16 — PROFESSIONAL ENGINEER — SEAL

Austin Brockenbrough — ENGINEERING • CONSULTING

A/E INFO

APPROVED: FOR COMMANDER NAVFAC 4/07/2016

ACTIVITY

SATISFACTORY TO DATE

DES ACS DRW WMG CHK GCD

<<PM/DM>>

BRANCH MANAGER TCK

CHIEF ENG/ARCH

<<XXX>> MFU

DEPARTMENT OF THE NAVY — NAVAL FACILITIES ENGINEERING COMMAND — ATLANTIC DIVISION — CAMP LEMONNIER — NAVAL FACILITIES ENGINEERING COMMAND — NORFOLK, VIRGINIA — DJIBOUTI AFRICA

DESC 1701/P-1701
CONSTRUCT FUEL STORAGE FACILITIES

PRODUCT RECOVERY TANK AND DETAILS

SCALE: AS NOTED

PROJECT NO.:

WORK ORDER NO.

NAVFAC DRAWING NO. 14047031

SHEET 67 OF 186

S-420

DRAWFORM REVISION: 10 MARCH 2009

FILE NAME: G:\14 Jobs\14-013 Djibouti - Fuel Storage Facility - NAVFAC LANT\CAD AutoCAD\S\S-420 PRODUCT RECOVERY TANK AND DETAILS.dwg LAYOUT NAME: PRODUCT RECOVERY TANK AND DETAILS PLOTTED: Thursday, March 31, 2016 - 9:47am USER: wheermann

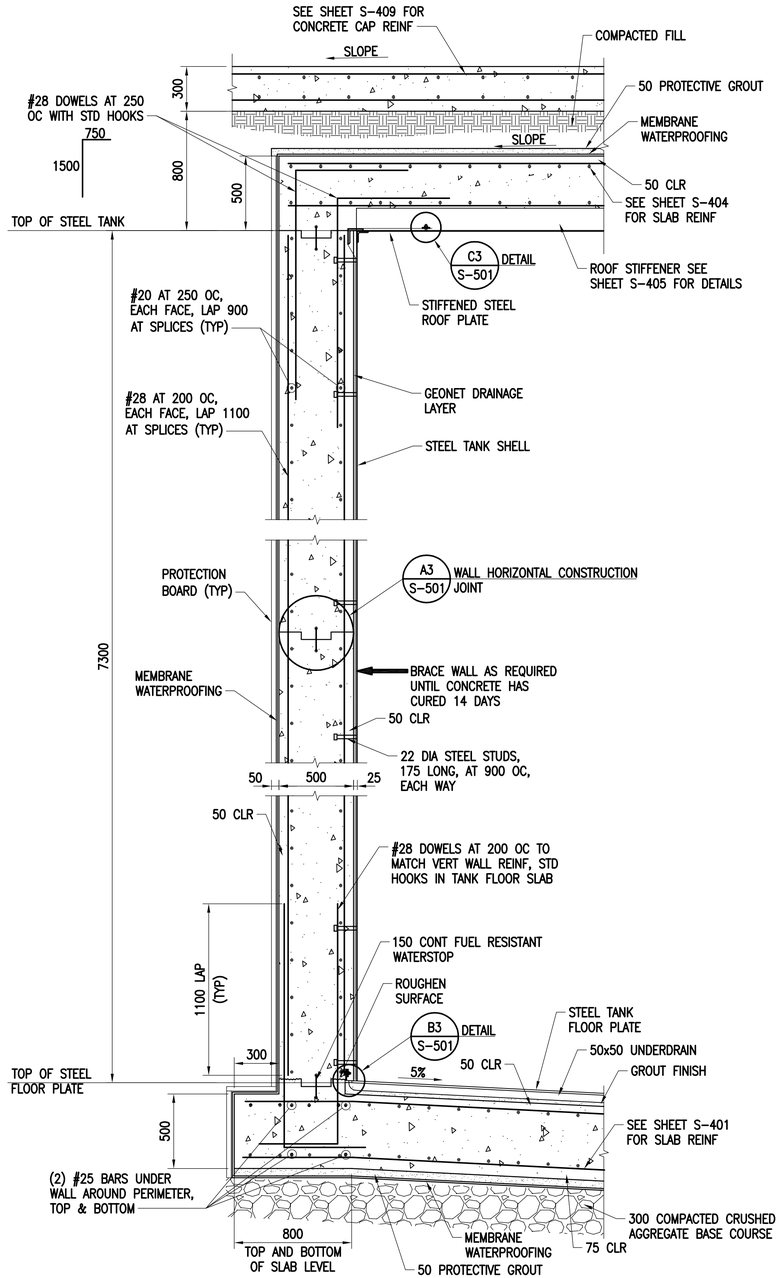

NOTE:

1. DO NOT SPLICE HORIZONTAL BARS AT CONSTRUCTION JOINTS.
2. ROUGHEN SURFACES OF CONCRETE AT JOINTS TO AN AMPLITUDE OF 6mm PRIOR TO PLACEMENT OF ADJACENT CONCRETE AND CLEAN BY SANDBLASTING OR HIGH-PRESSURE WATER JET.

DETAIL A1
SCALE: 1:20 S-101 S-401 S-402

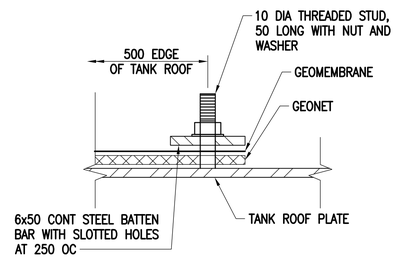

NOTE:

ALL PENETRATIONS IN GEOMEMBRANE AND GEONET FOR STUDS AND ROOF PLATE STIFFENERS MUST BE SEALED TO PREVENT WET CONCRETE FROM ENTERING THE VOID SPACE AND TO CONTAIN POTENTIAL TANK LEAKS.

DETAIL C3
SCALE: NO SCALE S-501

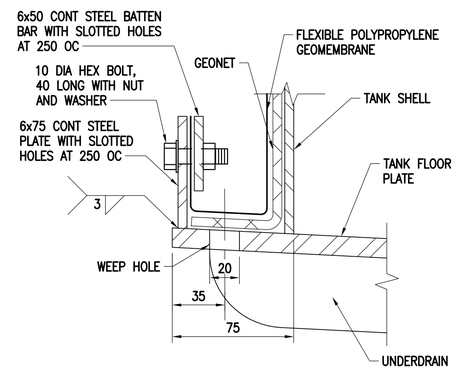

DETAIL B3
SCALE: NO SCALE S-501

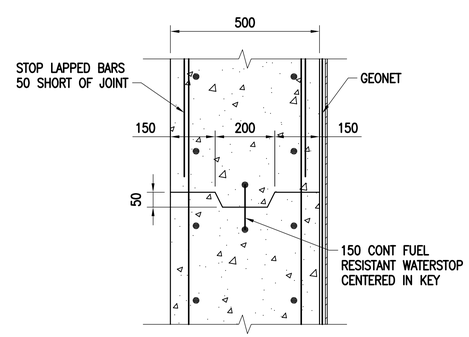

WALL HORIZONTAL CONSTRUCTION JOINT A3
SCALE: 1:10 S-501

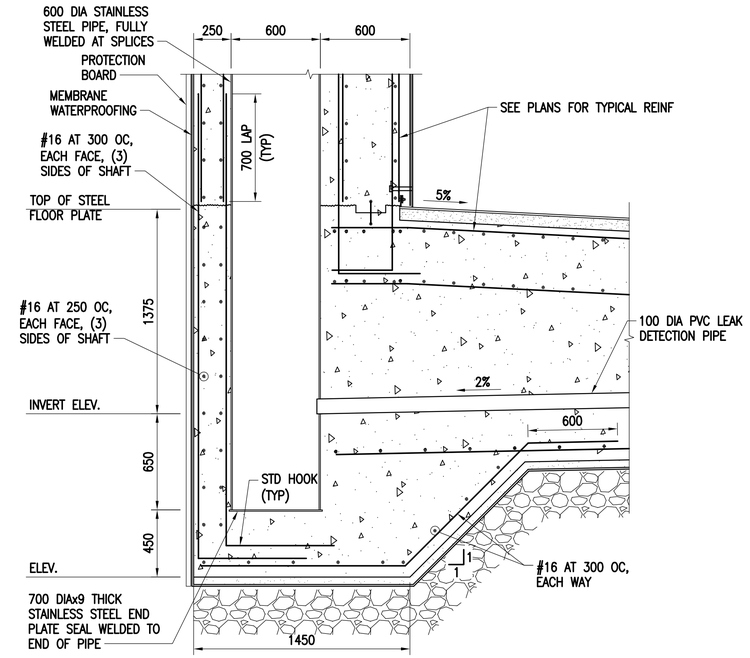

DETAIL C4
SCALE: 1:20 S-101

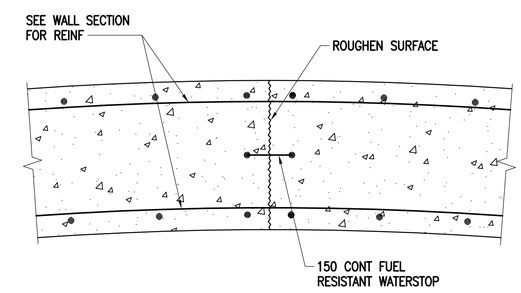

WALL VERTICAL CONSTRUCTION JOINT A4
SCALE: 1:10 S-402

GRAPHIC SCALE(S):

1:20 0 400 1000 2000 mm
1:10 0 100 200 500 1000 mm

DES ACS	DRW WMG	CHK GCD	
<<PM/DM>>			
BRANCH MANAGER	TCK		
CHIEF ENG/ARCH			
<<XXX>>	MFZ		

DEPARTMENT OF THE NAVY
NAVAL FACILITIES ENGINEERING COMMAND
ATLANTIC DIVISION
CAMP LEMONNIER
NAVAL FACILITIES ENGINEERING COMMAND
NORFOLK, VIRGINIA
DJIBOUTI AFRICA

DESC 1701/P-1701
CONSTRUCT FUEL STORAGE FACILITIES

TANK WALL SECTIONS & DETAILS

SCALE: AS NOTED
PROJECT NO.:
WORK ORDER NO.
NAVFAC DRAWING NO. 14047032
SHEET 68 OF 186
S-501

DRAWFORM REVISION: 10 MARCH 2009

NAVFAC

COMMONWEALTH OF VIRGINIA
ANDREW C. SWENCK
Lic. No.051635
04-01-16
PROFESSIONAL ENGINEER
SEAL

Austin Brockenbrough
ENGINEERING · CONSULTING

A/E INFO.
APPROVED
FOR COMMANDER NAVFAC 4/07/2016
ACTIVITY
SATISFACTORY TO DATE

APPR | DATE | DESCRIPTION | SYM

FILE NAME: G:\14 Jobs\14-013 Djibouti - Fuel Storage Facility - NAVFAC LANT\CAD AutoCAD\S\S-501 TANK WALL SECTIONS & DETAILS.dwg LAYOUT NAME: TANK WALL SECTIONS & DETAILS PLOTTED: Thursday, March 31, 2016 - 9:47am USER: whermann

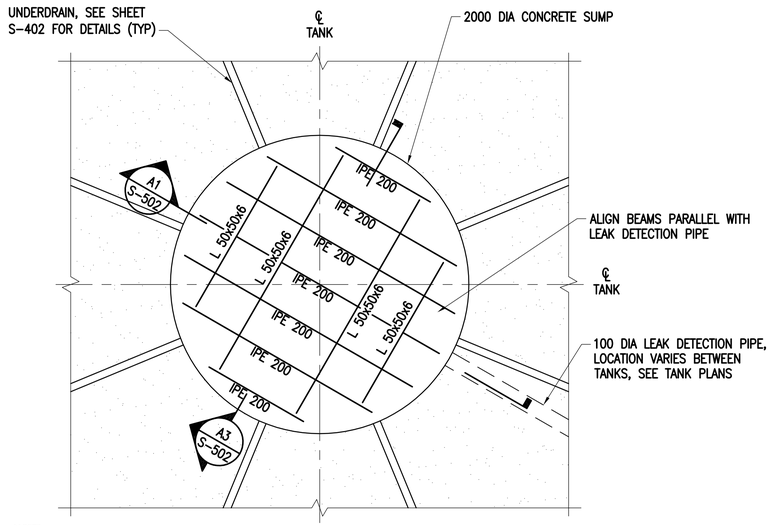

NOTE:

TANK FLOOR AND SUMP PLATES NOT SHOWN FOR CLARITY.

SUMP PLAN

SCALE: 1:20 — S-101, S-401, S-402 — C1

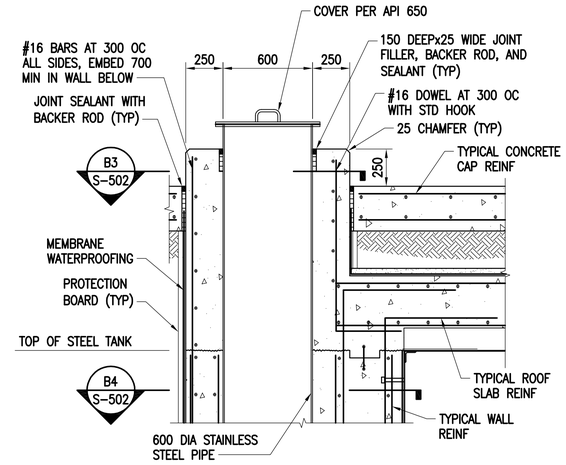

DETAIL

SCALE: 1:20 — S-101 — C3

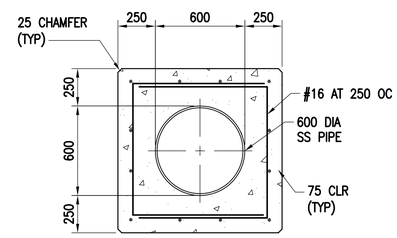

SECTION

SCALE: 1:20 — S-502 — B3

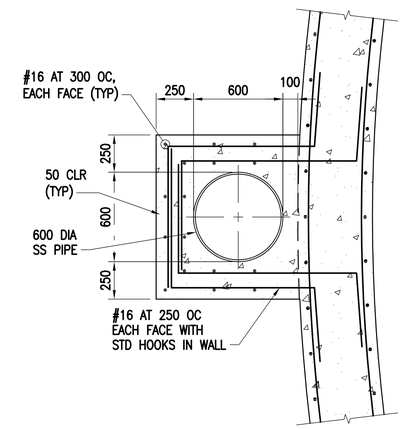

SECTION

SCALE: 1:20 — S-502 — B4

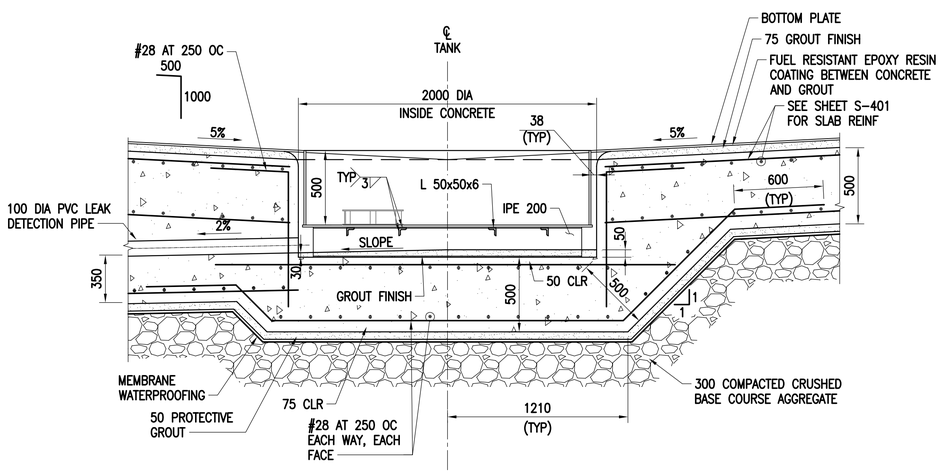

SECTION

SCALE: 1:20 — S-502 — A1

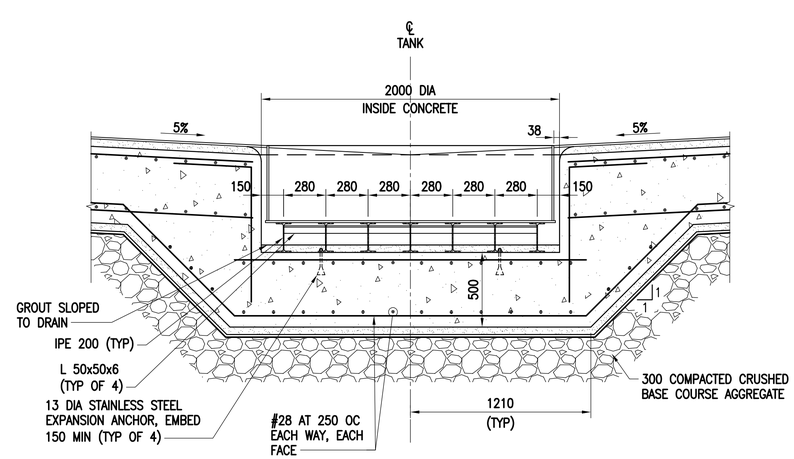

SECTION

SCALE: 1:20 — S-502 — A3

GRAPHIC SCALE(S):

1:20 — 0, 400, 1000, 2000 mm

1:10 — 0, 100, 200, 500, 1000 mm

SYM	DESCRIPTION	DATE	APPR

NAVFAC

COMMONWEALTH OF VIRGINIA — ANDREW C. SWENCK — Lic. No.051635 — 04-01-16 — PROFESSIONAL ENGINEER — SEAL

Austin Brockenbrough — ENGINEERING • CONSULTING — A/E INFO

APPROVED: FOR COMMANDER NAVFAC — 4/07/2016

ACTIVITY

SATISFACTORY TO — DATE

DES ACS | DRW WMG | CHK GCD

<<PM/DM>>

BRANCH MANAGER TCK

CHIEF ENG/ARCH

<<XXX>> MFU

DEPARTMENT OF THE NAVY — NAVAL FACILITIES ENGINEERING COMMAND — ATLANTIC DIVISION — NAVAL FACILITIES ENGINEERING COMMAND NORFOLK, VIRGINIA — CAMP LEMONNIER DJIBOUTI AFRICA

DESC 1701/P-1701
CONSTRUCT FUEL STORAGE FACILITIES

TANK DETAILS

SCALE: AS NOTED

PROJECT NO.:

WORK ORDER NO.

NAVFAC DRAWING NO. 14047033

SHEET 69 OF 186

S-502

DRAWFORM REVISION: 10 MARCH 2009

FILE NAME: G:\14 Jobs\14-013 DJibouti - Fuel Storage Facility - NAVFAC LANT\CAD AutoCAD\S\S-502 TANK DETAILS.dwg LAYOUT NAME: TANK DETAILS PLOTTED: Thursday, March 31, 2016 - 9:47am USER: wherrmann

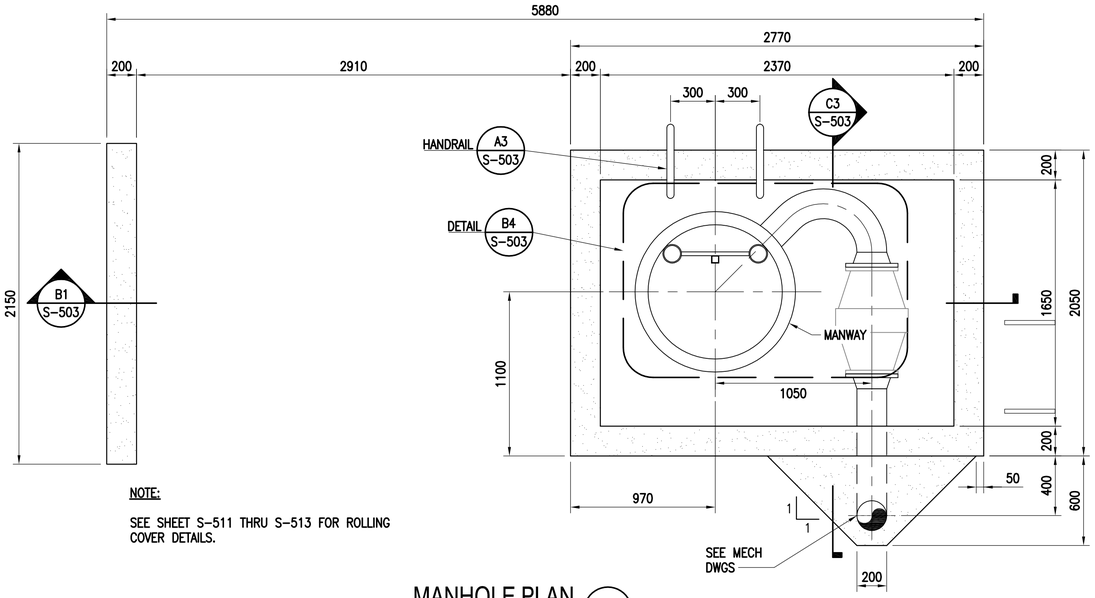

NOTE:

SEE SHEET S-511 THRU S-513 FOR ROLLING COVER DETAILS.

MANHOLE PLAN C1
SCALE: 1:20 S-403

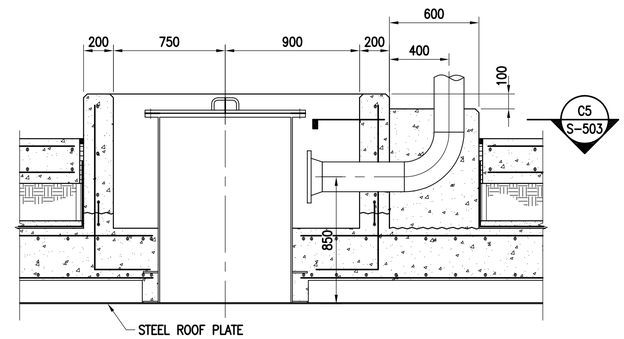

SECTION C3
SCALE: 1:20 S-503

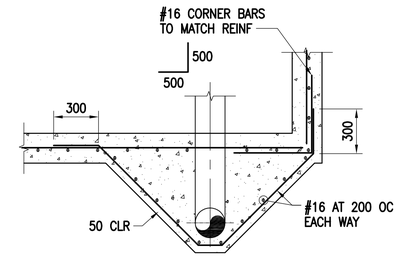

SECTION C5
SCALE: 1:20 S-503

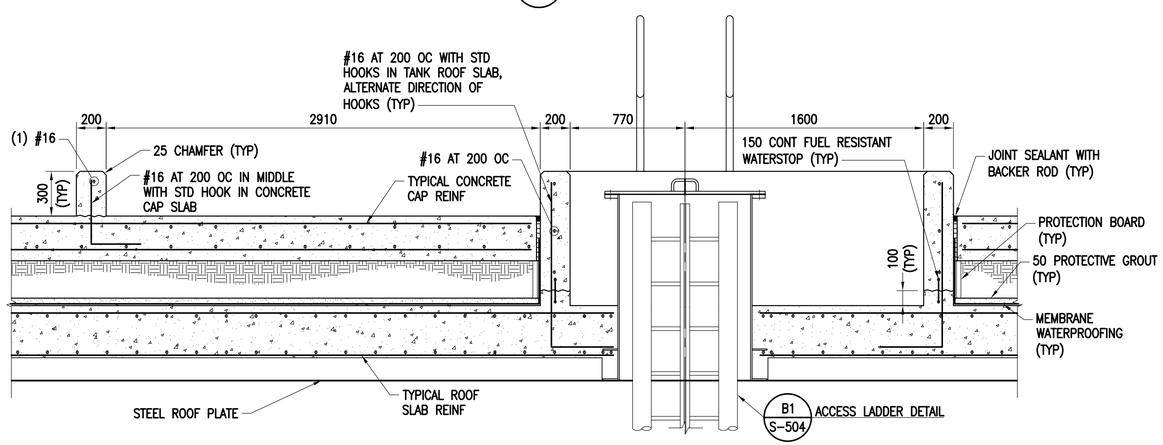

SECTION B1
SCALE: 1:20 S-503

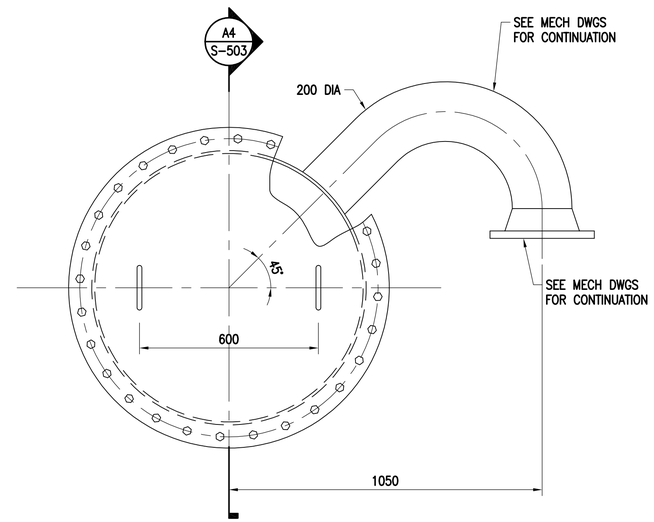

DETAIL B4
SCALE: 1:10 S-503

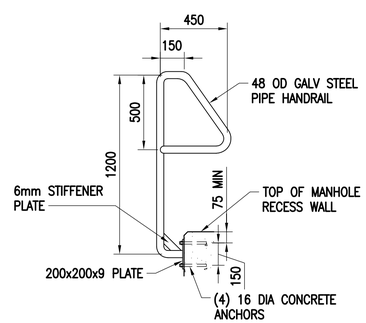

HANDRAIL A3
SCALE: 1:20 S-503

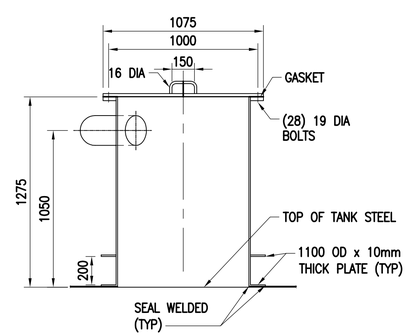

SECTION A4
SCALE: 1:20 S-503

GRAPHIC SCALE(S):

1:20 0 400 1000 2000 mm

1:10 0 100 200 500 1000 mm

SYM	DESCRIPTION	DATE	APPR

NAVFAC

COMMONWEALTH OF VIRGINIA
ANDREW C. SWENCK
Lic. No.051635
04-01-16
PROFESSIONAL ENGINEER
SEAL

Austin Brockenbrough
ENGINEERING · CONSULTING

A/E INFO

APPROVED
FOR COMMANDER NAVFAC 4/07/2016

ACTIVITY

SATISFACTORY TO DATE

DES ACS DRW WMG CHK GCD
<<PM/DM>>
BRANCH MANAGER RCK
CHIEF ENG/ARCH
<<XXX>> MGU

DEPARTMENT OF THE NAVY
NAVAL FACILITIES ENGINEERING COMMAND
ATLANTIC DIVISION
NAVAL FACILITIES ENGINEERING COMMAND
NORFOLK, VIRGINIA
CAMP LEMONNIER
DJIBOUTI AFRICA

DESC 1701/P-1701
CONSTRUCT FUEL STORAGE FACILITIES

TANK DETAILS

SCALE: AS NOTED
PROJECT NO.:
WORK ORDER NO.
NAVFAC DRAWING NO.
14047034
SHEET 70 OF 186

S-503

DRAWFORM REVISION: 10 MARCH 2009

FILE NAME: G:\14 Jobs\14-013 Djibouti - Fuel Storage Facility - NAVFAC LANT\CAD AutoCAD\S\S-503 TANK DETAILS.dwg LAYOUT NAME: TANK DETAILS PLOTTED: Thursday, March 31, 2016 - 9:48am USER: wherrmann

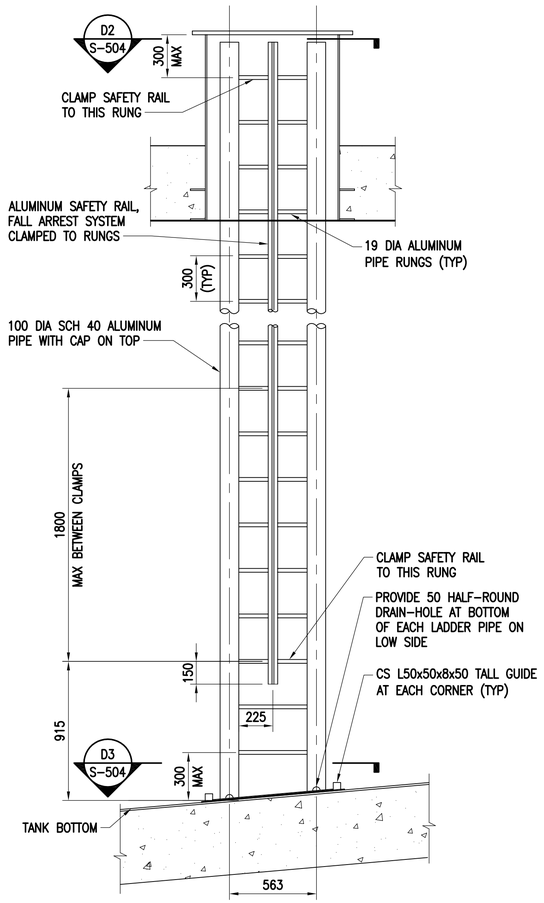

ACCESS LADDER DETAIL (B1)

SCALE: 1:20 S-503

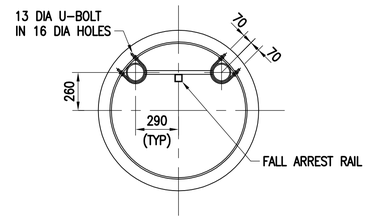

SECTION (D2)

SCALE: 1:20 S-504

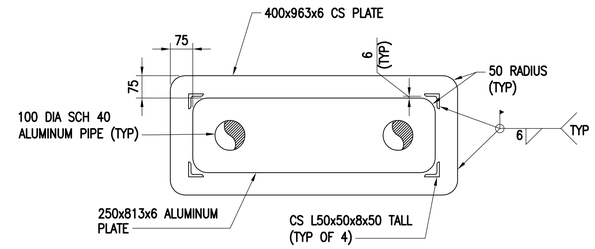

NOTE:
PROVIDE TEFLON ISOLATION GASKET BETWEEN CS AND ALUMINUM PLATES

SECTION (D3)

SCALE: 1:10 S-504

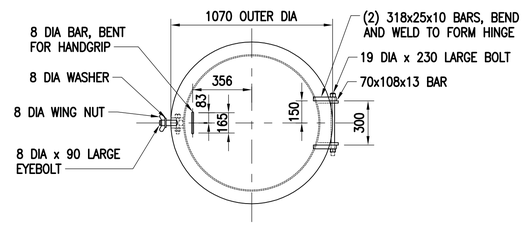

PLAN

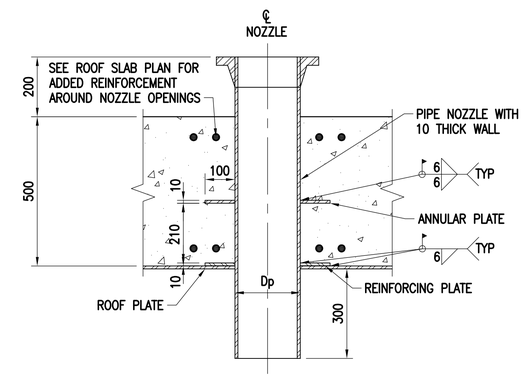

ROOF NOZZLE DIMENSIONS			
EQUIPMENT	SIZE LINE	OD OF PIPE	CUTOUT Dp
FLOAT PILOT	250	273	279
MECHANICAL TAPE GAGE	300	324	330

TYPICAL ROOF PENETRATION (B4)

SCALE: 1:10 S-407

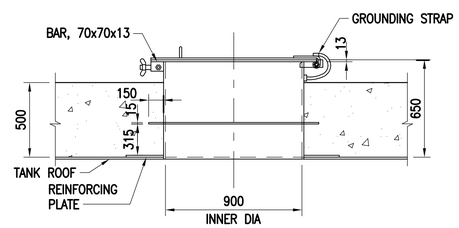

SECTION

ACCESS HATCH (B2)

SCALE: NONE S-403

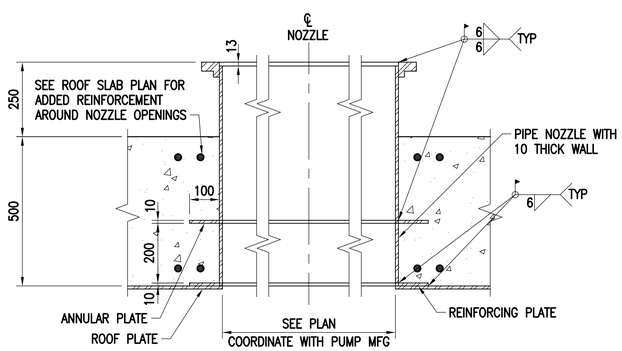

SECTION (A1)

SCALE: 1:10 S-407

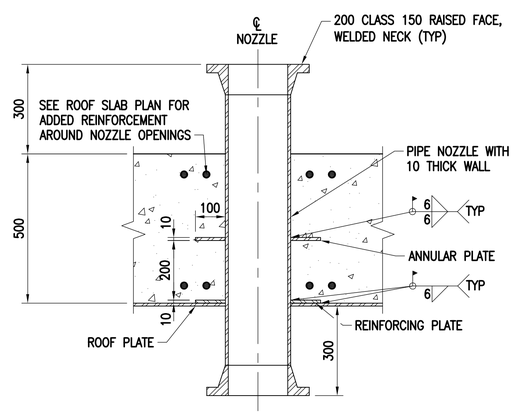

SECTION (A2)

SCALE: 1:10 S-407

GRAPHIC SCALE(S):

1:20 0 400 1000 2000 mm

1:10 0 100 200 500 1000 mm

SYM	DESCRIPTION	DATE	APPR

NAVFAC

COMMONWEALTH OF VIRGINIA
ANDREW C. SWENCK
Lic. No.051635
04-01-16
PROFESSIONAL ENGINEER
SEAL

Austin Brockenbrough
ENGINEERING • CONSULTING
A/E INFO

APPROVED
FOR COMMANDER NAVFAC 4/07/2016
ACTIVITY
SATISFACTORY TO DATE
DES ACS DRW WMG CHK GCD
<<PM/DM>>
BRANCH MANAGER RCK
CHIEF ENG/ARCH
<<XXX>> MFU

DEPARTMENT OF THE NAVY
NAVAL FACILITIES ENGINEERING COMMAND
ATLANTIC DIVISION
NAVAL FACILITIES ENGINEERING COMMAND
NORFOLK, VIRGINIA
CAMP LEMONNIER
DJIBOUTI AFRICA

DESC 1701/P-1701
CONSTRUCT FUEL STORAGE FACILITIES

TANK DETAILS

SCALE: AS NOTED
PROJECT NO.:
WORK ORDER NO.
NAVFAC DRAWING NO.
14047035
SHEET 71 OF 186
S-504

DRAWFORM REVISION: 10 MARCH 2009

FILE NAME: G:\14 Jobs\14-013 Djibouti - Fuel Storage Facility - NAVFAC LANT\CAD AutoCAD\S\S-504 TANK DETAILS.dwg LAYOUT NAME: TANK DETAILS PLOTTED: Thursday, March 31, 2016 - 9:48am USER: wherrmann

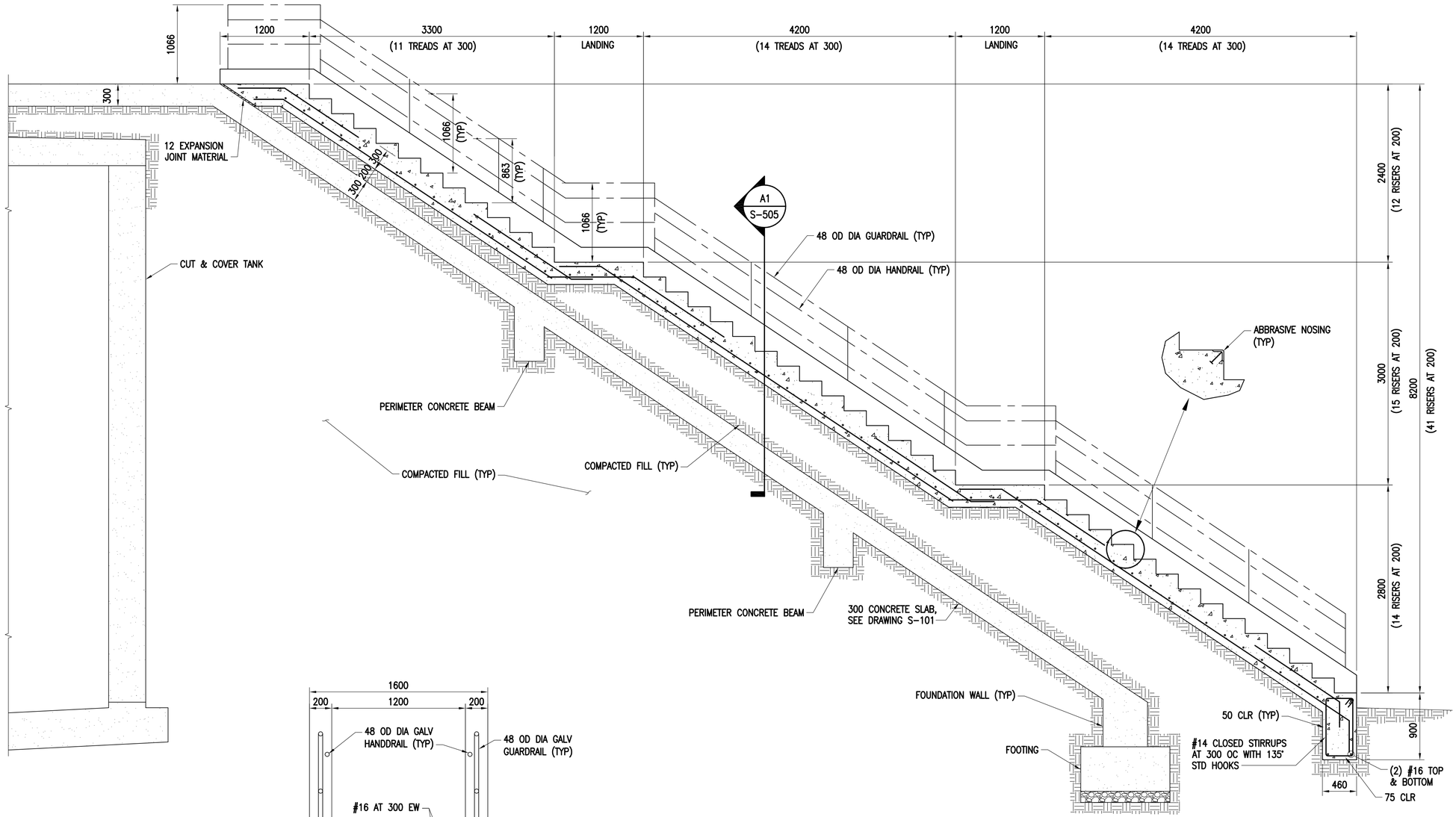

TANK BERM CONCRETE STAIRS SECTION (B1)

SCALE: 1:30 S-409

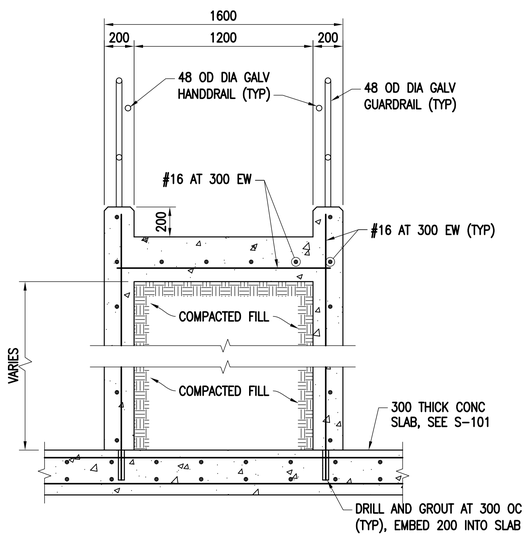

SECTION (A1)

SCALE: 1:20 S-505

GRAPHIC SCALE(S):

1:20 — 0, 400, 1000, 2000 mm

1:30 — 0, 1000, 2000, 3000 mm

SYM	DESCRIPTION	DATE	APPR

NAVFAC

COMMONWEALTH OF VIRGINIA
ANDREW C. SWENCK
Lic. No.051635
04-01-16
PROFESSIONAL ENGINEER
SEAL

Austin Brockenbrough
ENGINEERING · CONSULTING

A/E INFO

APPROVED
FOR COMMANDER NAVFAC 4/07/2016

ACTIVITY

SATISFACTORY TO DATE

DES ACS DRW WMG CHK GCD

<<PM/DM>>

BRANCH MANAGER TCK

CHIEF ENG/ARCH

<<XXX>> MGU

DEPARTMENT OF THE NAVY
NAVAL FACILITIES ENGINEERING COMMAND
ATLANTIC DIVISION
CAMP LEMONNIER
NAVAL FACILITIES ENGINEERING COMMAND
NORFOLK, VIRGINIA
DJIBOUTI AFRICA

DESC 1701/P-1701
CONSTRUCT FUEL STORAGE FACILITIES

CONCRETE TANK STAIR SECTION & DETAILS

SCALE: AS NOTED

PROJECT NO.:

WORK ORDER NO.

NAVFAC DRAWING NO.
14047036

SHEET 72 OF 186

S-505

DRAWFORM REVISION: 10 MARCH 2009

FILE NAME: G:\14 Jobs\14-013 Djibouti - Fuel Storage Facility - NAVFAC LANT\CAD AutoCAD\S\S-505 CONCRETE TANK STAIR SECTION & DETAILS.dwg LAYOUT NAME: CONCRETE TANK STAIR SECTION & DETAILS PLOTTED: Thursday, March 31, 2016 - 9:48am USER: wtermann

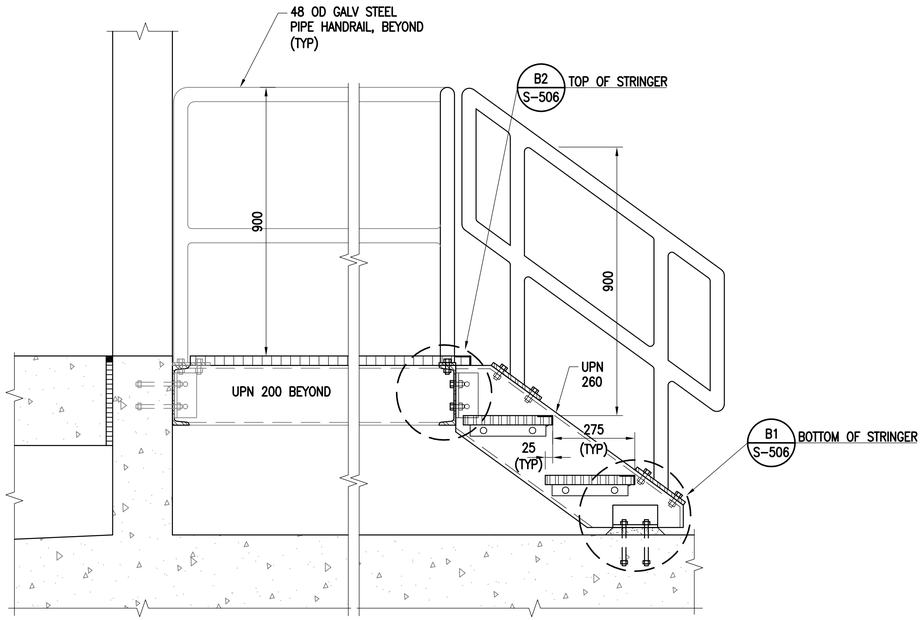

SECTION C1
SCALE: 1:10 S-407

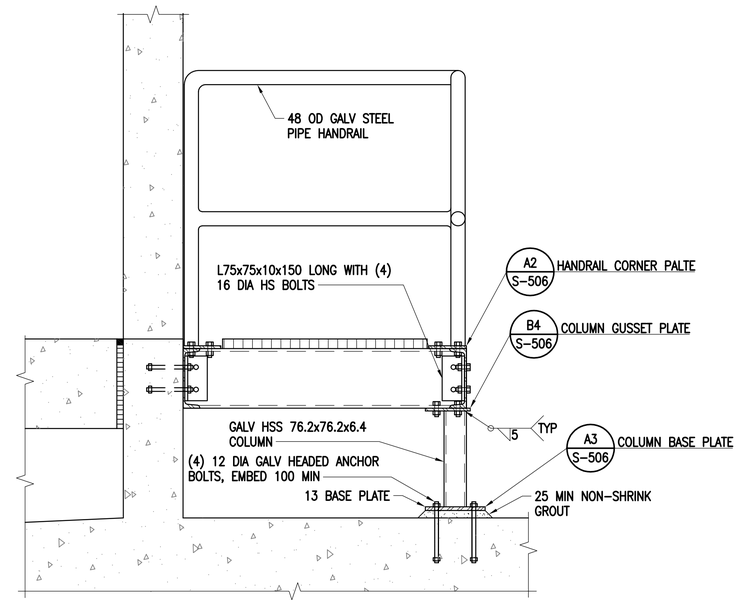

SECTION C3
SCALE: 1:10 S-407

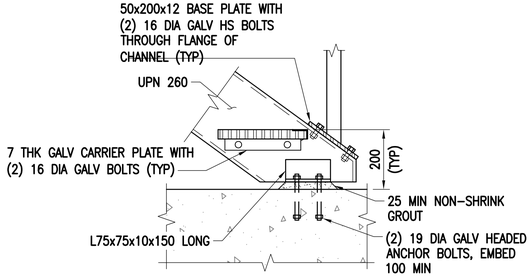

BOTTOM OF STRINGER B1
SCALE: 1:10 S-506

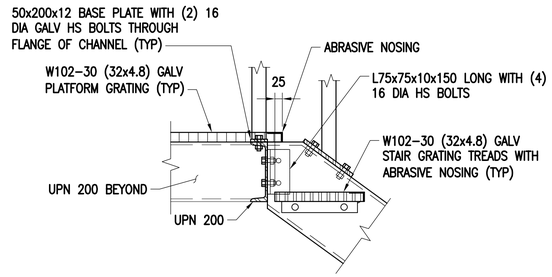

TOP OF STRINGER B2
SCALE: 1:10 S-506

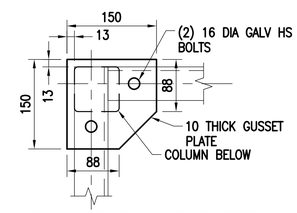

NOTE: CHANNEL-TO-CHANNEL CONNECTION
OMITTED FOR CLARITY

COLUMN GUSSET PLATE B4
SCALE: 1:5 S-506

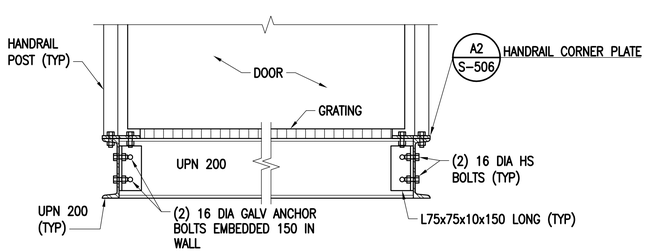

SECTION A1
SCALE: 1:10 S-407

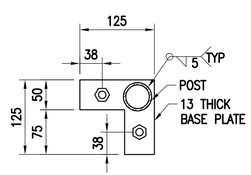

HANDRAIL CORNER PLATE A2
SCALE: 1:5 S-506

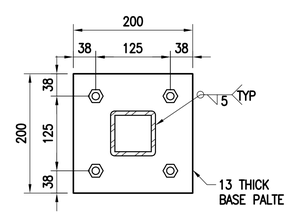

COLUMN BASE PLATE A3
SCALE: 1:5 S-506

GRAPHIC SCALE(S):

1:10 0 100 200 500 1000 mm

1:5 0 50 100 200 500 mm

SYM	DESCRIPTION	DATE	APPR

NAVFAC

COMMONWEALTH OF VIRGINIA
ANDREW C. SWENCK
Lic. No.051635
04-01-16
PROFESSIONAL ENGINEER
SEAL

Austin Brockenbrough
ENGINEERING • CONSULTING

A/E INFO.
APPROVED
FOR COMMANDER NAVFAC 4/07/2016
ACTIVITY
SATISFACTORY TO DATE
DES ACS DRW WMG CHK GCD
<<PM/DM>>
BRANCH MANAGER TCK
CHIEF ENG/ARCH
<<XXX>> MGU

DEPARTMENT OF THE NAVY
NAVAL FACILITIES ENGINEERING COMMAND
ATLANTIC DIVISION
CAMP LEMONNIER
NAVAL FACILITIES ENGINEERING COMMAND
NORFOLK, VIRGINIA
DJIBOUTI AFRICA

DESC 1701/P-1701
CONSTRUCT FUEL STORAGE FACILITIES

PUMPHOUSE STAIRS & DETAILS

SCALE: AS NOTED
PROJECT NO.:
WORK ORDER NO.
NAVFAC DRAWING NO.
14047037
SHEET 73 OF 186
S-506

DRAWFORM REVISION: 10 MARCH 2009

FILE NAME: G:\14 Jobs\14-013 Djibouti - Fuel Storage Facility - NAVFAC LANT\CAD AutoCAD\S\S-506 PUMPHOUSE STAIRS & DETAILS.dwg LAYOUT NAME: PUMPHOUSE STAIRS & DETAILS PLOTTED: Thursday, March 31, 2016 - 9:48am USER: wherrmann

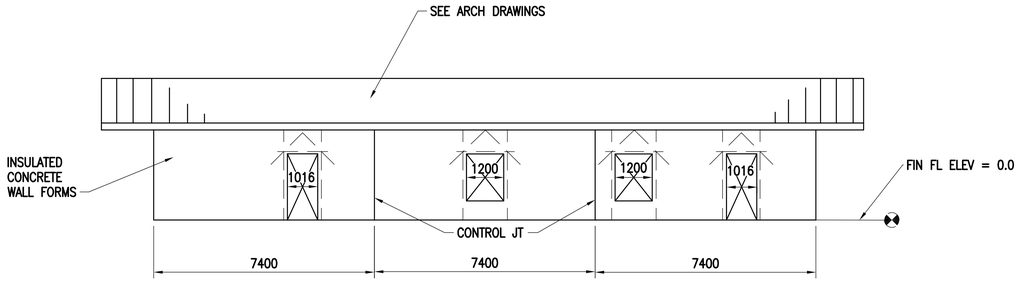

OPERATIONS BUILDING SOUTH ELEVATION

SCALE: 1:100

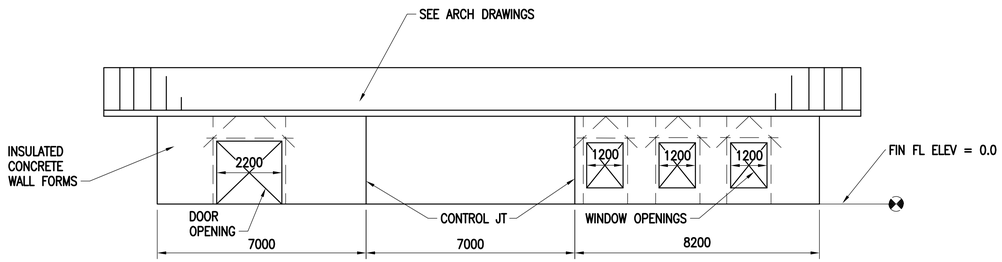

OPERATIONS BUILDING NORTH ELEVATION

SCALE: 1:100

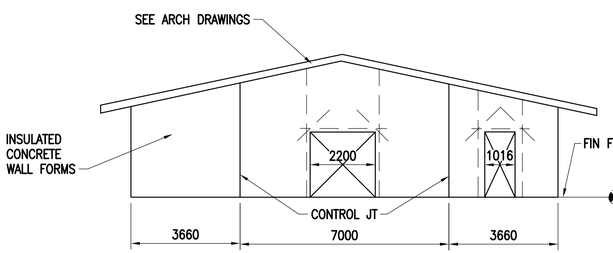

OPERATIONS BUILDING WEST ELEVATION

SCALE: 1:100

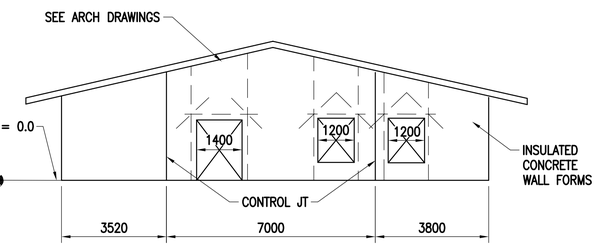

OPERATIONS BUILDING EAST ELEVATION

SCALE: 1:100

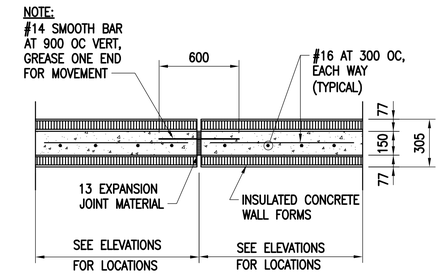

CONTROL JOINT DETAIL

SCALE: NONE

S-410 D4

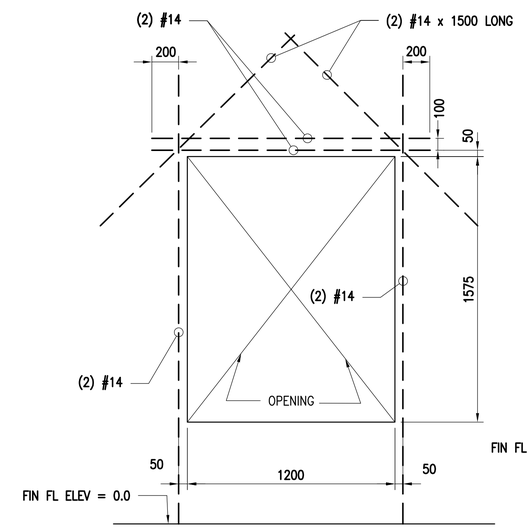

REINFORCING AT WINDOWS IN CONCRETE WALLS

SCALE: NONE

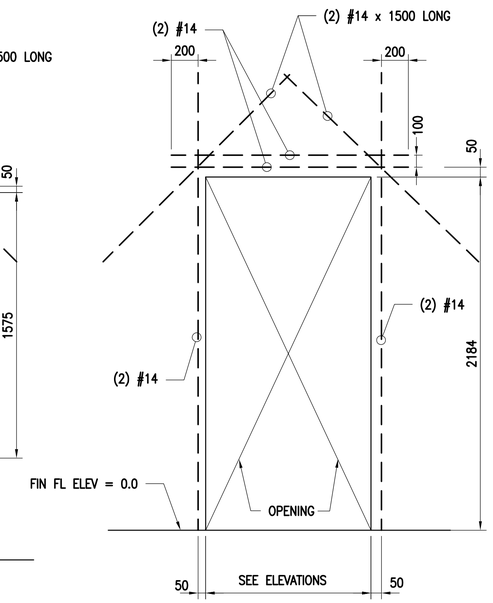

REINFORCING AT DOORS IN CONCRETE WALLS

SCALE: NONE

GRAPHIC SCALE(S):

1:100 0 2000 5000 10 000 mm

SYM	DESCRIPTION	DATE	APPR

NAVFAC

COMMONWEALTH OF VIRGINIA
ANDREW C. SWENCK
Lic. No.051635
04-01-16
PROFESSIONAL ENGINEER
SEAL

Austin Brockenbrough
ENGINEERING • CONSULTING

A/E INFO.

APPROVED
FOR COMMANDER NAVFAC 4/07/2016

ACTIVITY

SATISFACTORY TO DATE

DES ACS DRW WMG CHK GCD
<<PM/DM>>
BRANCH MANAGER KCK
CHIEF ENG/ARCH
<<XXX>> MGR

DEPARTMENT OF THE NAVY
NAVAL FACILITIES ENGINEERING COMMAND
ATLANTIC DIVISION
NAVAL FACILITIES ENGINEERING COMMAND
NORFOLK, VIRGINIA
CAMP LEMONNIER
DJIBOUTI AFRICA

DESC 1701/P-1701
CONSTRUCT FUEL STORAGE FACILITIES

OPERATIONS BUILDING REINFORCING ELEVATIONS

SCALE: AS NOTED
PROJECT NO.:
WORK ORDER NO.
NAVFAC DRAWING NO. 14047038
SHEET 74 OF 186

S-507

DRAWFORM REVISION: 10 MARCH 2009

FILE NAME: G:\14 Jobs\14-013 Djibouti - Fuel Storage Facility - NAVFAC LANT\CAD AutoCAD\S\S-507 OPERATIONS BUILDING REINFORCING ELEVATIONS.dwg LAYOUT NAME: OPERATIONS BUILDING REINFORCING ELEVATIONS PLOTTED: Thursday, March 31, 2016 - 9:49am USER: whermann

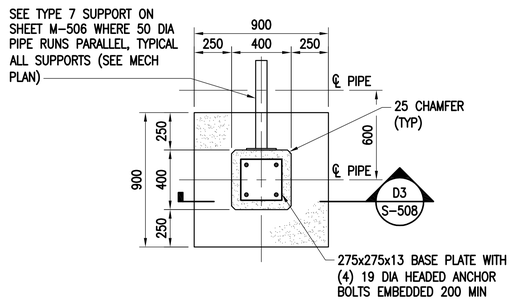

PIPE SUPPORT PLAN - TYPE (A)

SCALE: 1:20

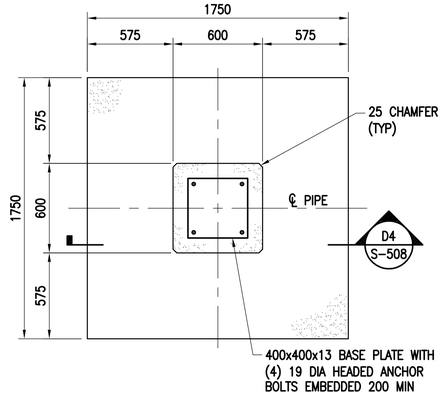

PIPE SUPPORT PLAN - TYPE (E)

SCALE: 1:20

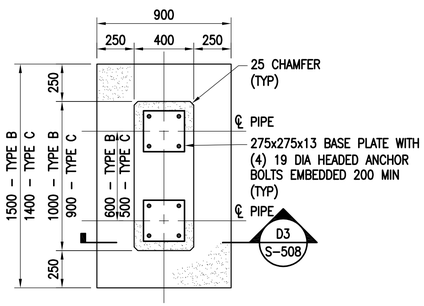

PIPE SUPPORT PLAN - TYPES (B) & (C)

SCALE: 1:20

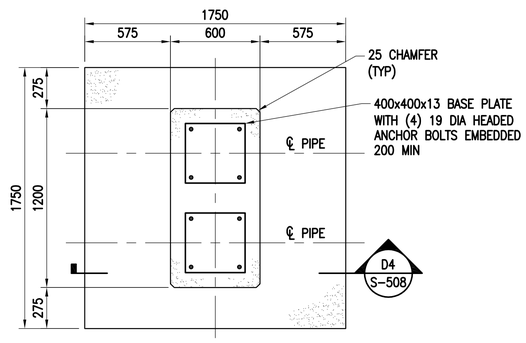

PIPE SUPPORT PLAN - TYPE (F)

SCALE: 1:20

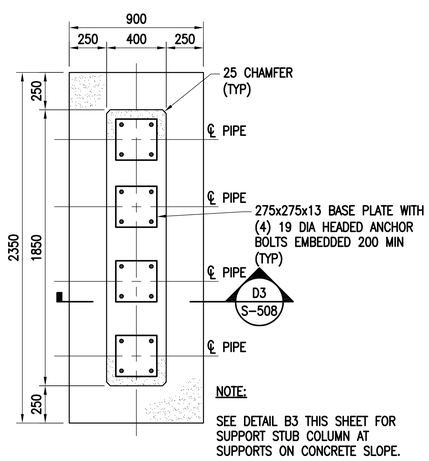

PIPE SUPPORT PLAN - TYPE (D)

SCALE: 1:20

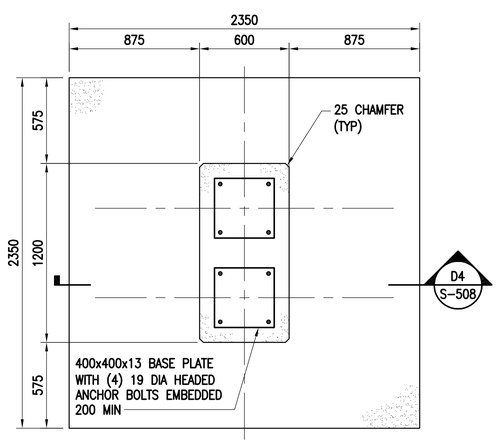

PIPE SUPPORT PLAN - TYPE (G)

SCALE: 1:20

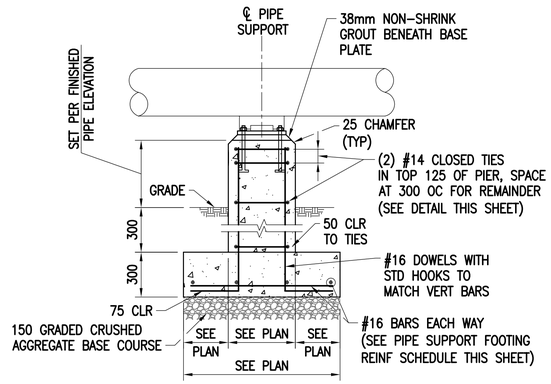

SECTION

SCALE: 1:20 S-508 (D3)

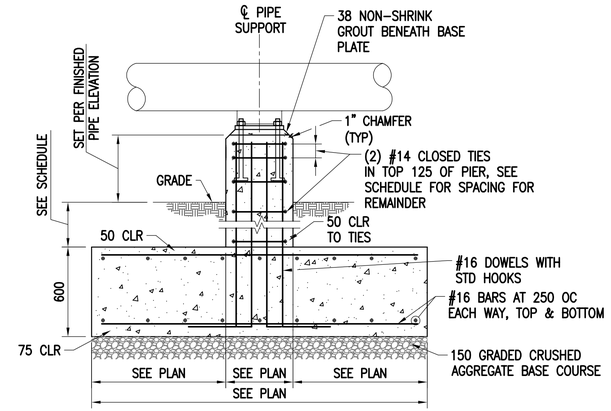

SECTION

SCALE: 1:20 S-508 (D4)

TYPICAL NOTE:

PIPE SUPPORTS ON TANK CONCRETE CAP SHALL USE THE CAP AS A FOUNDATION. DOWELS SHALL BE TIED INTO LOWER REINF LAYER.

PIPE SUPPORT ANCHOR DEPTH SCHEDULE

SUPPORT TYPE	DEPTH BELOW GRADE
E	900mm
F	1200mm
G	1800mm

PIPE SUPPORT ANCHOR REINF TIES SCHEDULE

SUPPORT TYPE	BAR SIZE	SPACING
E	#14	300 OC
F	#14	300 OC
G	#14	250 OC

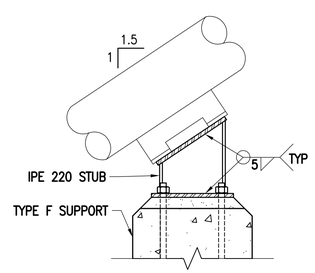

SUPPORT STUB COLUMN DETAIL

SCALE: 1:10 (B3)

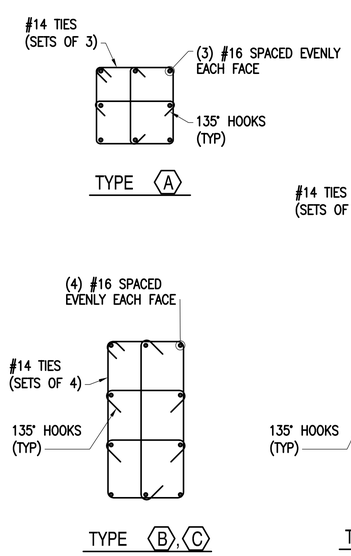

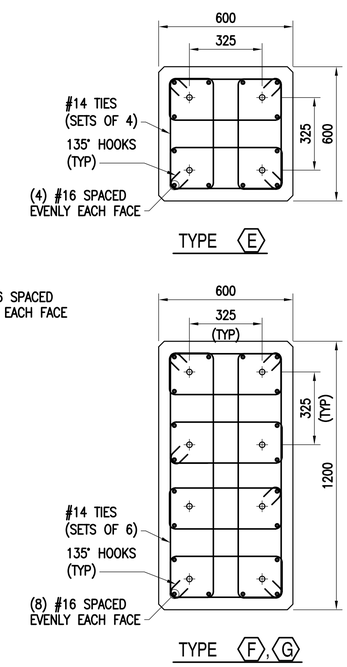

SUPPORT REINFORCING DETAILS

SCALE: NONE

GRAPHIC SCALE(S):

1:20 0 400 1000 2000 mm

NAVFAC

COMMONWEALTH OF VIRGINIA
ANDREW C. SWENCK
Lic. No.051635
04-01-16
PROFESSIONAL ENGINEER
SEAL

Austin Brockenbrough
ENGINEERING • CONSULTING

A/E INFO

APPROVED
FOR COMMANDER NAVFAC 4/07/2016
ACTIVITY
SATISFACTORY TO DATE
DES ACS DRW WMG CHK GCD
<<PM/DMO>>
BRANCH MANAGER TCK
CHIEF ENG/ARCH
<<XXX>> MFU

DEPARTMENT OF THE NAVY
NAVAL FACILITIES ENGINEERING COMMAND
ATLANTIC DIVISION
CAMP LEMONNIER
NAVAL FACILITIES ENGINEERING COMMAND
NORFOLK, VIRGINIA
DJIBOUTI AFRICA

DESC 1701/P-1701
CONSTRUCT FUEL STORAGE FACILITIES

PIPE SUPPORTS

SCALE: AS NOTED
PROJECT NO.:
WORK ORDER NO.
NAVFAC DRAWING NO.
14047039
SHEET 75 OF 186
S-508

DRAWFORM REVISION: 10 MARCH 2009

SYM	DESCRIPTION	DATE	APPR

FILE NAME: G:\14 Jobs\14-013 D\Djibouti - Fuel Storage Facility - NAVFAC LANT\CAD AutoCAD\S\S-508 PIPE SUPPORTS.dwg LAYOUT NAME: PIPE SUPPORTS PLOTTED: Thursday, March 31, 2016 - 9:49am USER: whermann

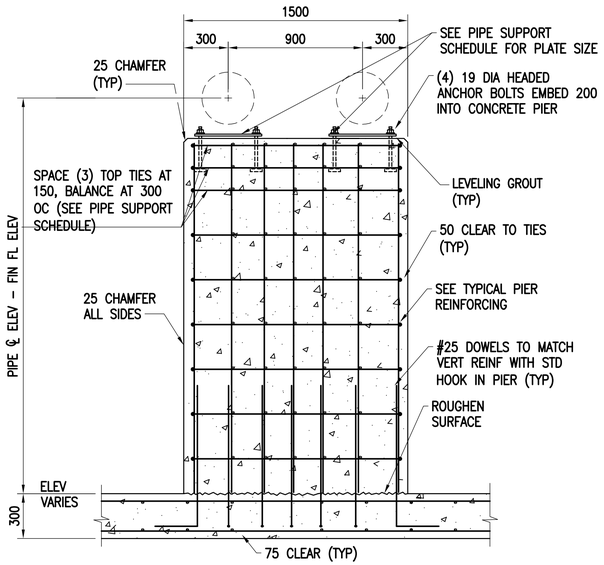

TYPE (H)
SCALE: 1:20

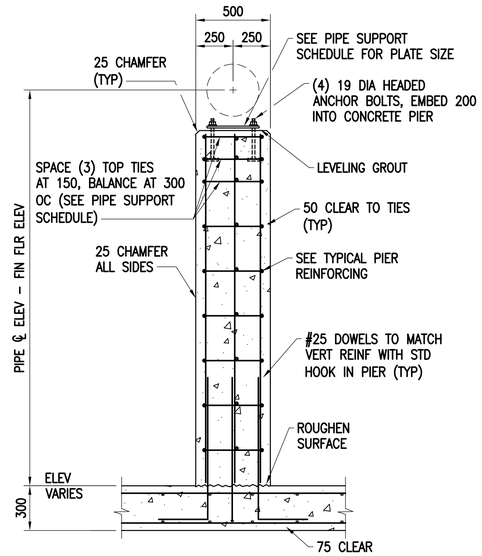

TYPE (J)
SCALE: 1:20

PIPE SUPPORT SCHEDULE

PIPE SUPPORT	PIPE DIAMETER (MM)	PIERS			PIPE SUPPORT FOUNDATION TYPE (THIS DWG)	PIPE SUPPORT (SEE M-505)	PLATE SIZE
		SIZE (MM)	VERTICAL REINF	TIES			
PS-1	200	500x300	(8) #25	#12 AT 300	(J)	(2)	225x350x13
	250						
PS-2	200	500x300	(8) #25	#12 AT 300	(K)	(2)	225x350x13
PS-3	(2) 250	1500x300	(16) #25	#12 AT 300	(H)	(2)	(2) PLATES – 225x350x13
PS-4	(2) 6	250x250	--	#12 CTRD	(L)	--	SEE DETAIL THIS SHEET
PS-5	(1) 100, (1) 200	450x450	--	#12 CTRD	(M)	(2)	SEE DETAIL THIS SHEET
	(2) 200	450x450	--	#12 CTRD	(M)	(2)	SEE DETAIL THIS SHEET

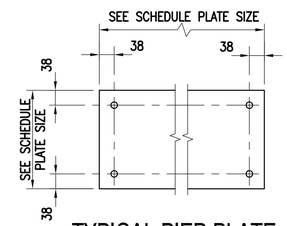

TYPICAL PIER PLATE
SCALE: NONE

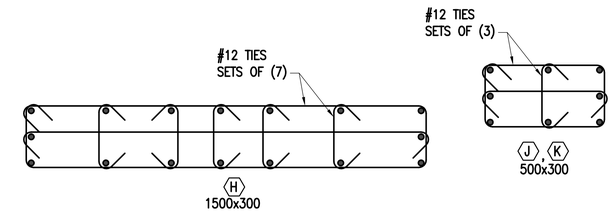

TYPICAL PIER REINFORCING
SCALE: NONE

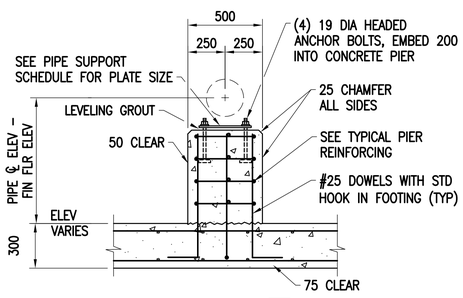

TYPE (K)
SCALE: 1:20

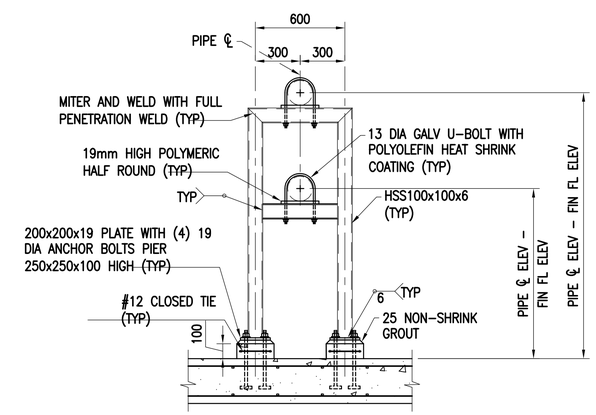

TYPE (L)
SCALE: 1:20

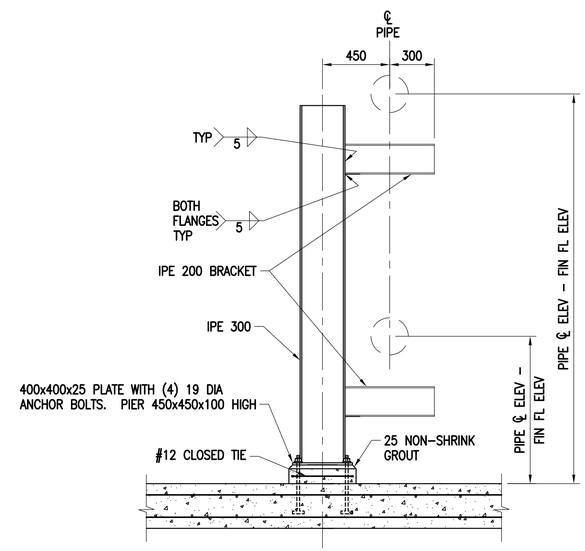

TYPE (M)
SCALE: 1:20

GRAPHIC SCALE(S):
1:20 — 0, 400, 1000, 2000 mm

SYM	DESCRIPTION	DATE	APPR

NAVFAC

COMMONWEALTH OF VIRGINIA
ANDREW C. SWENCK
Lic. No.051635
04-01-16
PROFESSIONAL ENGINEER
SEAL

Austin Brockenbrough
ENGINEERING • CONSULTING

A/E INFO

APPROVED
FOR COMMANDER NAVFAC 4/07/2016
ACTIVITY
SATISFACTORY TO DATE
DES ACS DRW WMG CHK GCD
<<PM/DM>>
BRANCH MANAGER TCK
CHIEF ENG/ARCH
<<XXX>> MFG

DEPARTMENT OF THE NAVY
NAVAL FACILITIES ENGINEERING COMMAND
ATLANTIC DIVISION
NAVAL FACILITIES ENGINEERING COMMAND
NORFOLK, VIRGINIA
CAMP LEMONNIER
DJIBOUTI AFRICA

DESC 1701/P-1701
CONSTRUCT FUEL STORAGE FACILITIES

PIPE SUPPORTS

SCALE: AS NOTED
PROJECT NO.:
WORK ORDER NO.
NAVFAC DRAWING NO.
14047040
SHEET 76 OF 186
S-509
DRAWFORM REVISION: 10 MARCH 2009

FILE NAME: G:\14 Jobs\14-013 Djibouti - Fuel Storage Facility - NAVFAC LANT\CAD AutoCAD\S\S-509 PIPE SUPPORTS.dwg LAYOUT NAME: PIPE SUPPORTS PLOTTED: Thursday, March 31, 2016 - 9:49am USER: wherrmann

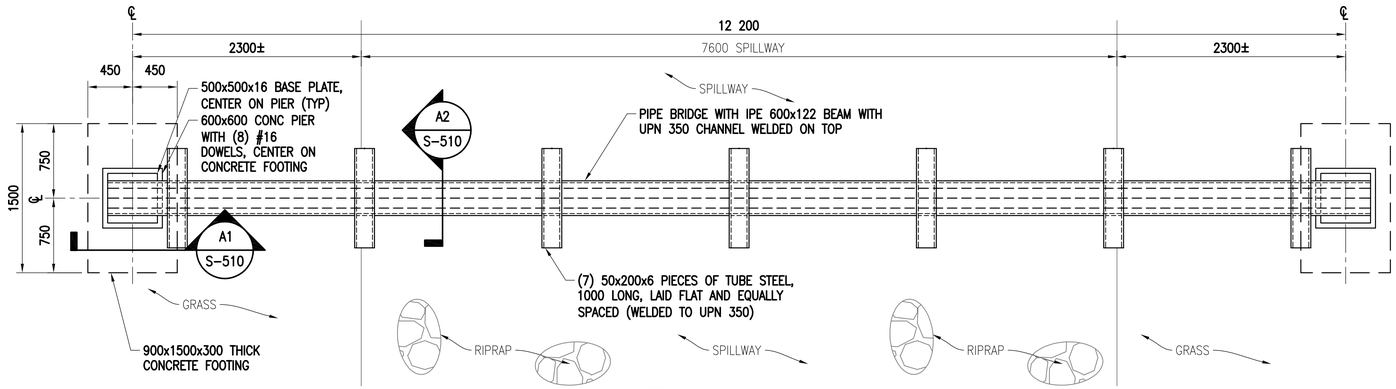

NOTE:
ALL STEEL SHALL BE HOT DIPPED GALVANIZED.

PLAN NORTH

DITCH CROSSING
SCALE: 1:30 M-501 C1

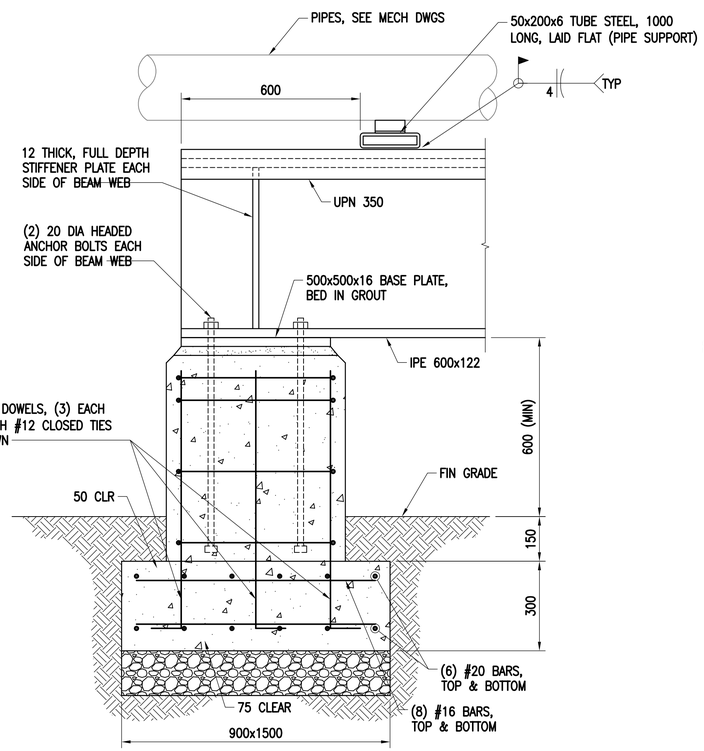

SECTION
SCALE: 1:10 S-510 A1

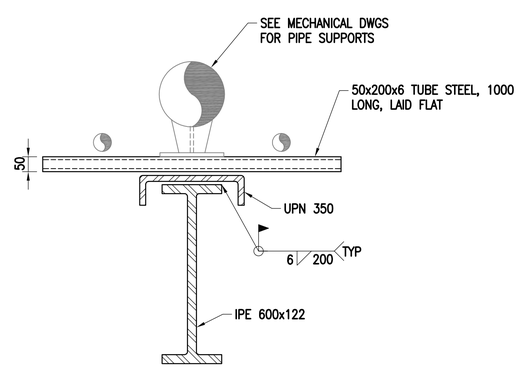

SECTION
SCALE: 1:10 S-510 A2

GRAPHIC SCALE(S):

1:10 — 0 100 200 500 1000 mm

1:30 — 0 1000 2000 3000 mm

SYM	DESCRIPTION	DATE	APPR

NAVFAC

COMMONWEALTH OF VIRGINIA
ANDREW C. SWENCK
Lic. No.051635
04-01-16
PROFESSIONAL ENGINEER
SEAL

Austin Brockenbrough
ENGINEERING • CONSULTING
A/E INFO

APPROVED
FOR COMMANDER NAVFAC 4/07/2016
ACTIVITY
SATISFACTORY TO DATE
DES ACS DRW WMG CHK GCD
<<PM/DM>>
BRANCH MANAGER RCK
CHIEF ENG/ARCH
<<XXX>> MGH

DEPARTMENT OF THE NAVY
NAVAL FACILITIES ENGINEERING COMMAND
ATLANTIC DIVISION
NAVAL FACILITIES ENGINEERING COMMAND
NORFOLK, VIRGINIA
CAMP LEMONNIER
DJIBOUTI AFRICA

DESC 1701/P-1701
CONSTRUCT FUEL STORAGE FACILITIES

DITCH PIPE CROSSING PLAN AND SECTIONS

SCALE: AS NOTED
PROJECT NO.:
WORK ORDER NO.
NAVFAC DRAWING NO. 14047041
SHEET 77 OF 186
S-510

DRAWFORM REVISION: 10 MARCH 2009

FILE NAME: G:\14 Jobs\14-013 Djibouti - Fuel Storage Facility - NAVFAC LANT\CAD AutoCAD\S\S-510 DITCH PIPE CROSSING PLAN AND SECTIONS.dwg LAYOUT NAME: DITCH PIPE CROSSING PLAN AND SECTIONS PLOTTED: Thursday, March 31, 2016 - 9:49am USER: wherrmann

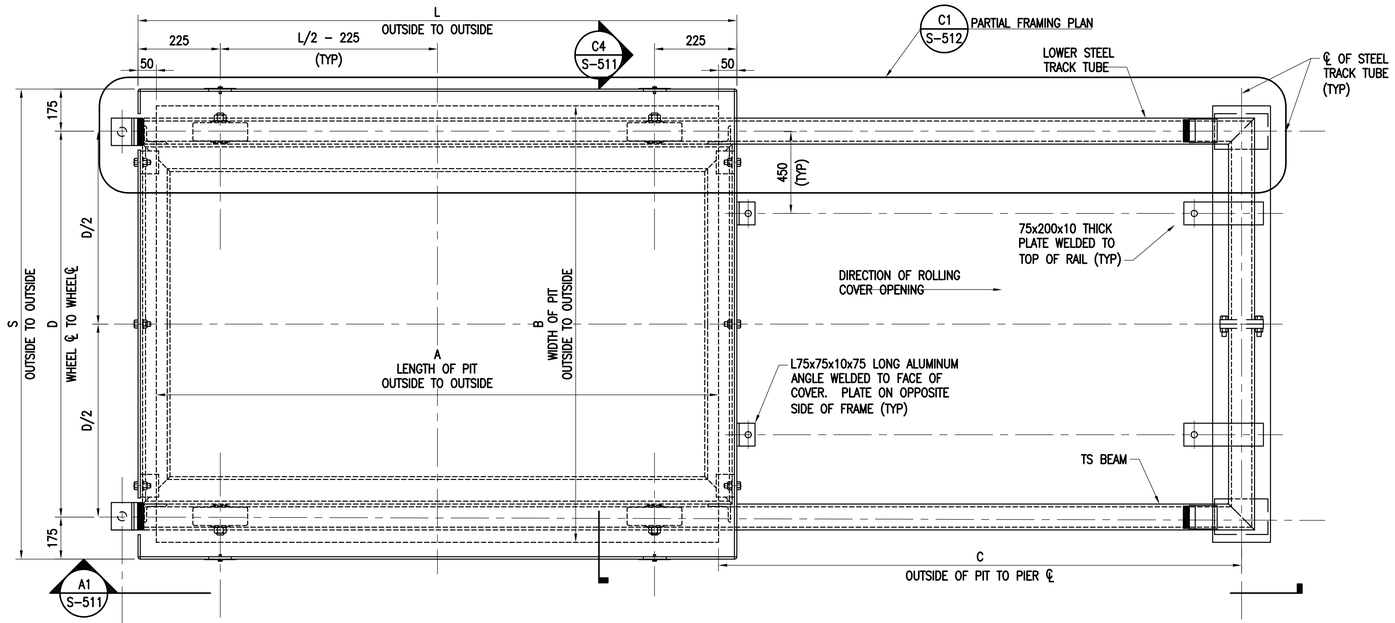

ROLLING COVER PLAN

SCALE: NONE

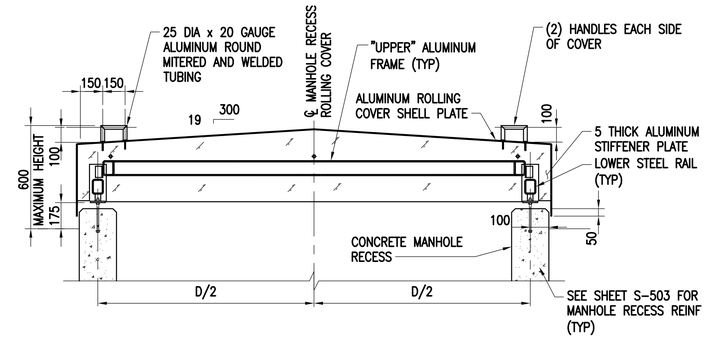

SECTION

SCALE: NONE S-511 C4

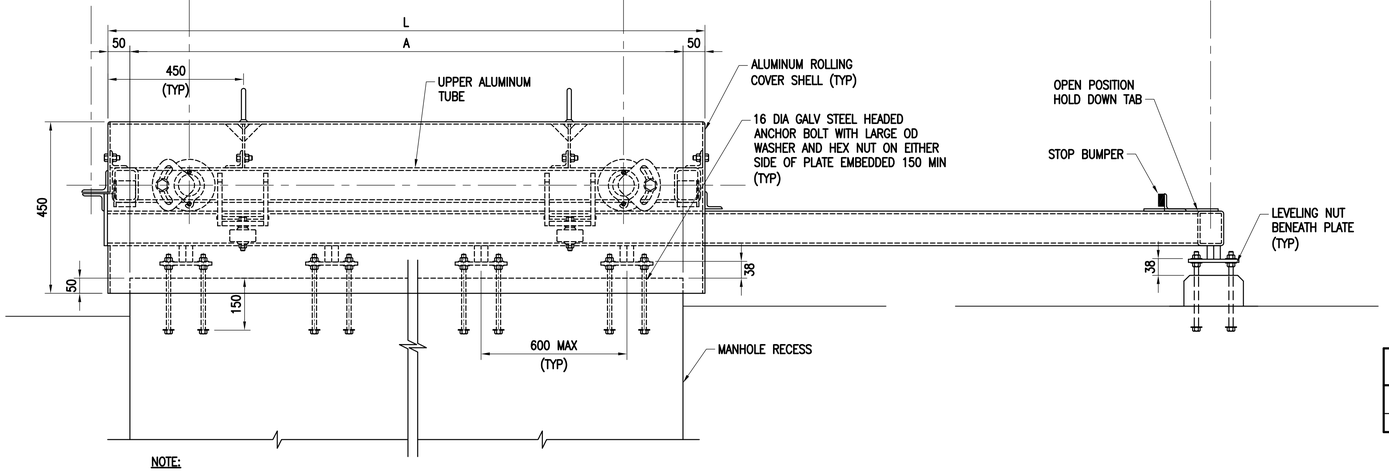

NOTE:

SEE ROLLING COVER SCHEDULE FOR DIMENSIONS.

SECTION

SCALE: NONE S-511 A1

ROLLING COVER NOTES:

1. THE LOWER STEEL TUBE TRACK SHALL BE SHIMMED LEVEL AT THE MANHOLE RECESS AND SHALL BE ADJUSTED WITH THE PROVIDED LEVELING NUTS.
2. THE ROLLING COVER SHALL BE TESTED BY THE CONTRACTOR TO ENSURE PROPER WHEEL ADJUSTMENTS TO ELIMINATE BINDING AND TRACK MISALIGNMENT. IN ADDITION, CONTRACTOR SHALL DEMONSTRATE TO THE CONTRACTING OFFICER'S REPRESENTATIVE THAT THE COVER AND COVER TRACKS ARE LEVEL.
3. ALL FERROUS STEEL CONNECTIONS INCLUDING BOLTS, NUTS AND WASHERS SHALL BE GALVANIZED, UNLESS OTHERWISE INDICATED ON THESE DRAWINGS. WHERE THERE IS CONTACT BETWEEN ALUMINUM AND FERROUS STEEL, THE SURFACES SHALL BE COATED WITH AN NON-CORROSIVE COATING TO PREVENT GALVANIC REACTION OF DISSIMILAR METALS.
4. ALL PARTS DISASSEMBLED FOR SHIPPING ARE TO BE MATCH MARKED FOR REASSEMBLY IN FIELD.
5. ALL CARBON STEEL WELDMENTS ARE TO BE GALVANIZED.
6. ALL FASTENERS SHALL BE SIMILAR MATERIAL TO JOINED MATERIAL, UNLESS OTHERWISE NOTED.

ROLLING COVER SCHEDULE

PIT	A	B	C	D	SHELL MATERIAL	TYPE	SHELL THICKNESS	STIFFENER THICKNESS	L	S
MANHOLE RECESS	2770	2050	3010	1850	ALUMINUM	6016-T6	6	6	2870	2090

SYM	DESCRIPTION	DATE	APPR

NAVFAC

COMMONWEALTH OF VIRGINIA
ANDREW C. SWENCK
Lic. No.051635
04-01-16
PROFESSIONAL ENGINEER
SEAL

Austin Brockenbrough
ENGINEERING • CONSULTING
A/E INFO

APPROVED
FOR COMMANDER NAVFAC 4/27/2016
ACTIVITY
SATISFACTORY TO DATE
DES ACS DRW WMG CHK GCD
<<PM/DM>>
BRANCH MANAGER TCK
CHIEF ENG/ARCH
<<XXX>> MGU

DEPARTMENT OF THE NAVY
NAVAL FACILITIES ENGINEERING COMMAND
NAVAL FACILITIES ENGINEERING COMMAND
NORFOLK, VIRGINIA
ATLANTIC DIVISION
CAMP LEMONNIER
DJIBOUTI AFRICA
ROLLING COVER DETAILS
DESC 1701/P-1701
CONSTRUCT FUEL STORAGE FACILITIES
ROLLING COVER DETAILS

SCALE: AS NOTED
PROJECT NO.:
WORK ORDER NO.
NAVFAC DRAWING NO.
14047042
SHEET 78 OF 186
S-511

DRAWFORM REVISION: 10 MARCH 2009

FILE NAME: G:\14 Jobs\14-013 Djibouti - Fuel Storage Facility - NAVFAC LANT\CAD AutoCAD\S\S-511 ROLLING COVER DETAILS.dwg LAYOUT NAME: ROLLING COVER DETAILS PLOTTED: Thursday, March 31, 2016 - 9:50am USER: whermann

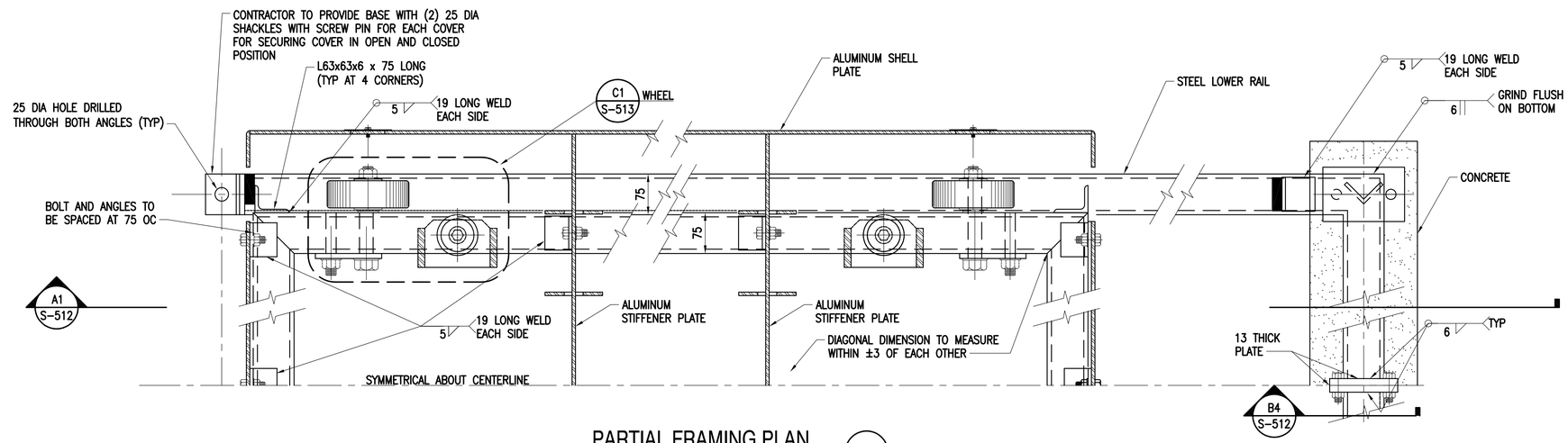

PARTIAL FRAMING PLAN

SCALE: NONE S-511 C1

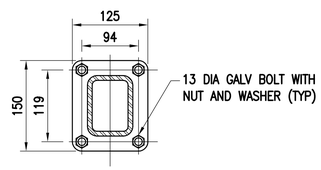

SECTION

SCALE: NONE S-512 B4

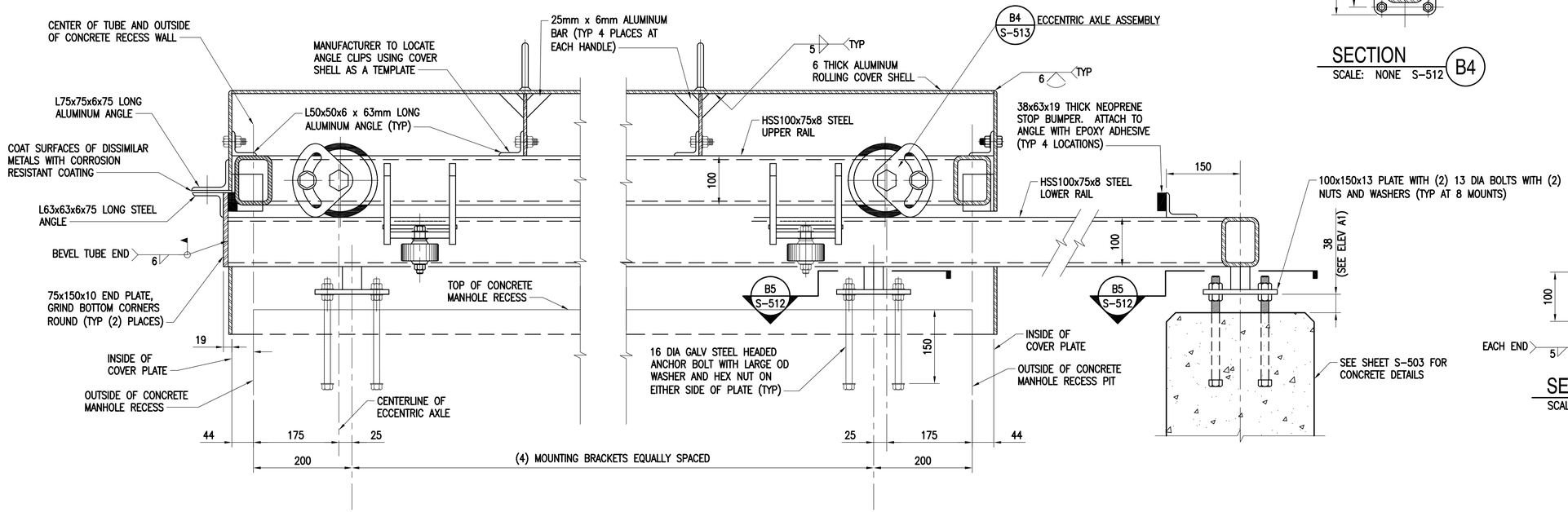

SECTION

SCALE: NONE S-512 A1

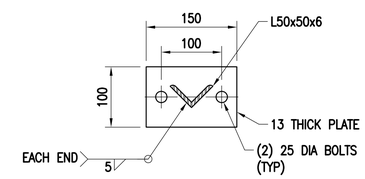

SECTION

SCALE: NONE S-512 B5

SYM	DESCRIPTION	DATE	APPR

NAVFAC

COMMONWEALTH OF VIRGINIA
ANDREW C. SWENCK
Lic. No.051635
04-01-16
PROFESSIONAL ENGINEER
SEAL

Austin Brockenbrough
ENGINEERING • CONSULTING
A/E INFO

APPROVED
FOR COMMANDER NAVFAC 4/07/2016
ACTIVITY
SATISFACTORY TO DATE
DES ACS DRW WMG CHK GCD
<<PM/DM>>
BRANCH MANAGER KCK
CHIEF ENG/ARCH
<<XXX>> MFU

DEPARTMENT OF THE NAVY
NAVAL FACILITIES ENGINEERING COMMAND
ATLANTIC DIVISION
NAVAL FACILITIES ENGINEERING COMMAND
NORFOLK, VIRGINIA
CAMP LEMONNIER
DJIBOUTI AFRICA
ROLLING COVER DETAILS
DESC 1701/P-1701
CONSTRUCT FUEL STORAGE FACILITIES
ROLLING COVER DETAILS

SCALE: AS NOTED
PROJECT NO.:
WORK ORDER NO.
NAVFAC DRAWING NO.
14047043
SHEET 79 OF 186
S-512

DRAWFORM REVISION: 10 MARCH 2009

FILE NAME: G:\14 Jobs\14-013 Djibouti - Fuel Storage Facility - NAVFAC LANT\CAD AutoCAD\S\S-512 ROLLING COVER DETAILS.dwg LAYOUT NAME: ROLLING COVER DETAILS PLOTTED: Thursday, March 31, 2016 - 9:50am USER: wherrmann

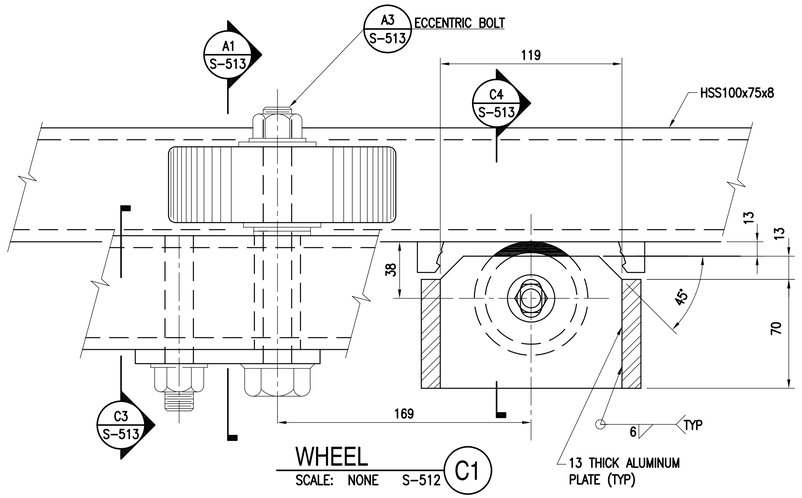

WHEEL
SCALE: NONE S-512 C1

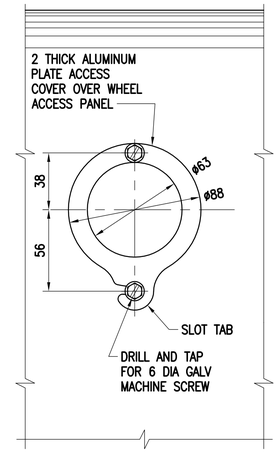

COVER PLATE
SCALE: NONE S-513 C2

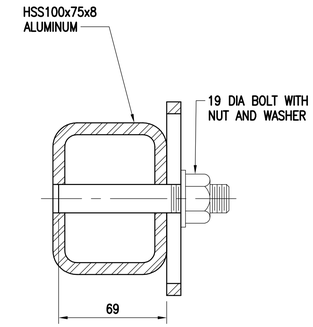

SECTION
SCALE: NONE S-513 C3

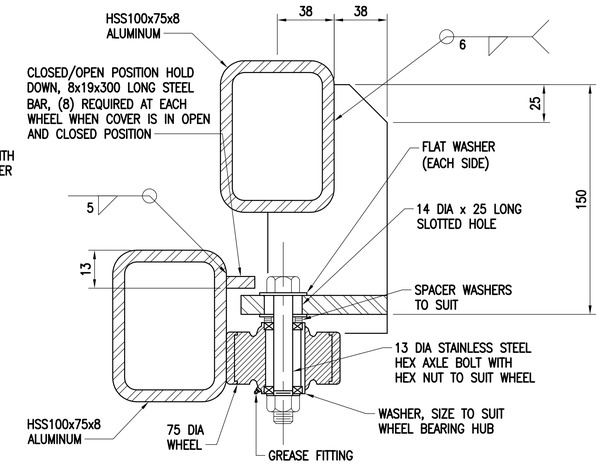

SECTION
SCALE: NONE S-513 C4

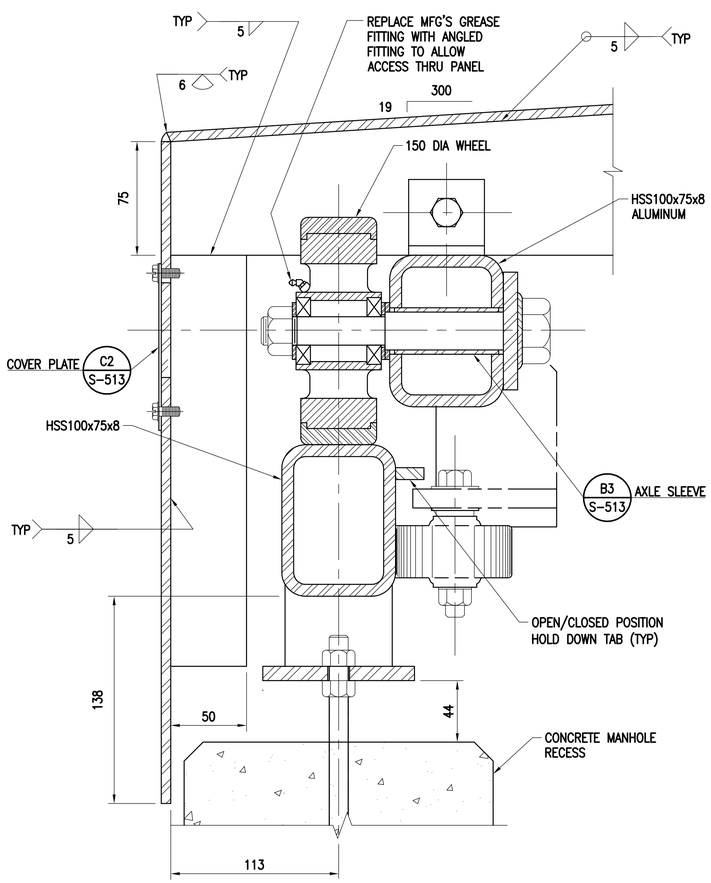

SECTION
SCALE: NONE S-513 A1

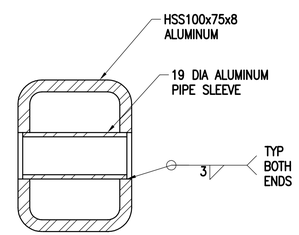

AXLE SLEEVE
SCALE: NONE S-513 B3

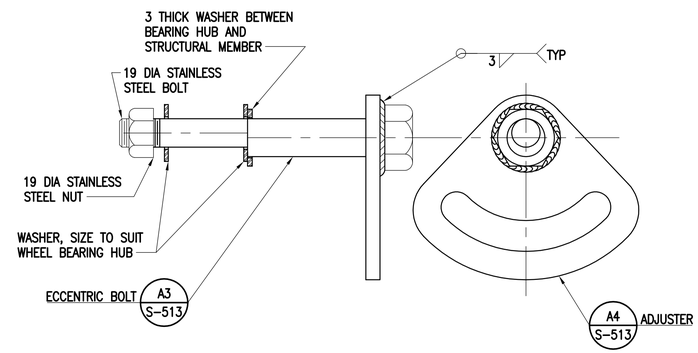

ECCENTRIC AXLE ASSEMBLY
SCALE: NONE S-512 B4

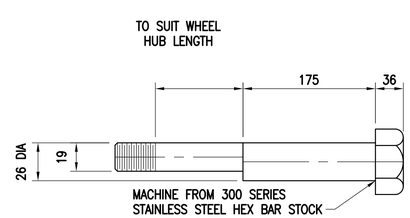

ECCENTRIC BOLT
SCALE: NONE S-513 A3

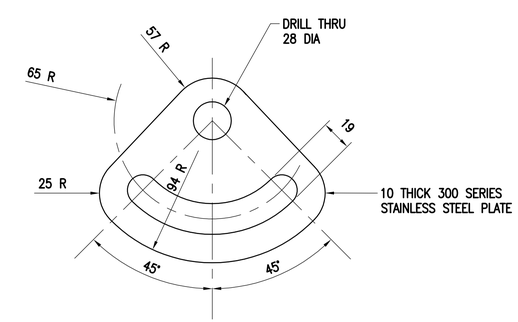

ADJUSTER
SCALE: NONE S-513 A4

SYM	DESCRIPTION	DATE	APPR

NAVFAC

COMMONWEALTH OF VIRGINIA
ANDREW C. SWENCK
Lic. No.051635
04-01-16
PROFESSIONAL ENGINEER
SEAL

Austin Brockenbrough
ENGINEERING • CONSULTING
A/E INFO

APPROVED
FOR COMMANDER NAVFAC 4/07/2016
ACTIVITY
SATISFACTORY TO DATE
DES ACS DRW WMG CHK GCD
<<PM/DM>>
BRANCH MANAGER TCK
CHIEF ENG/ARCH
<<XXX>> MFU

DEPARTMENT OF THE NAVY
NAVAL FACILITIES ENGINEERING COMMAND
ATLANTIC DIVISION
NAVAL FACILITIES ENGINEERING COMMAND
NORFOLK, VIRGINIA
CAMP LEMONNIER
DJIBOUTI AFRICA

DESC 1701/P-1701
CONSTRUCT FUEL STORAGE FACILITIES

ROLLING COVER DETAILS

SCALE: AS NOTED
PROJECT NO.:
WORK ORDER NO.
NAVFAC DRAWING NO.
14047044
SHEET 80 OF 186
S-513

DRAWFORM REVISION: 10 MARCH 2009

FILE NAME: G:\14 Jobs\14-013 Djibouti - Fuel Storage Facility - NAVFAC LANT\CAD AutoCAD\S\S-513 ROLLING COVER DETAILS.dwg LAYOUT NAME: ROLLING COVER DETAILS PLOTTED: Thursday, March 31, 2016 - 9:50am USER: whermann

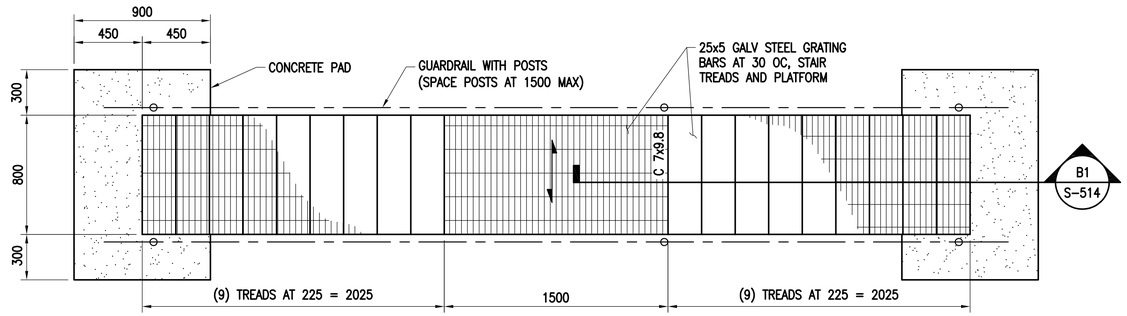

PIPE CROSSOVER PLAN (D1)

SCALE: 1:20 M-104, M-105

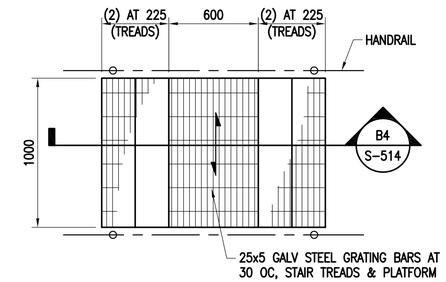

PIPE CROSSOVER PLAN (D4)

SCALE: 1:20 M-403

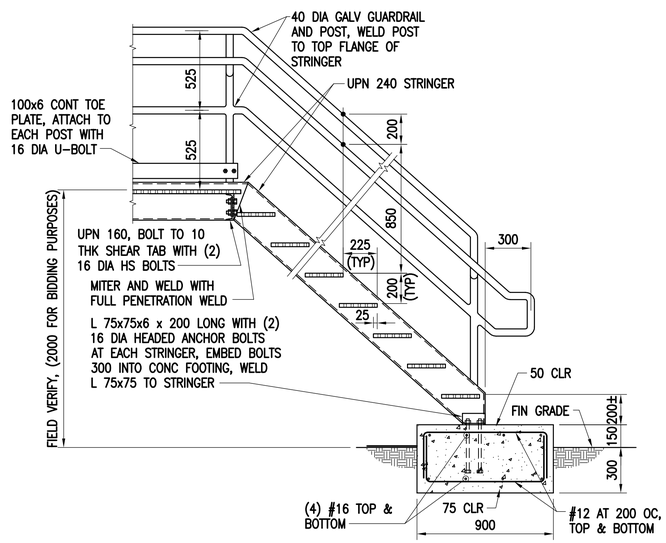

SECTION (B1)

SCALE: 1:20 S-514

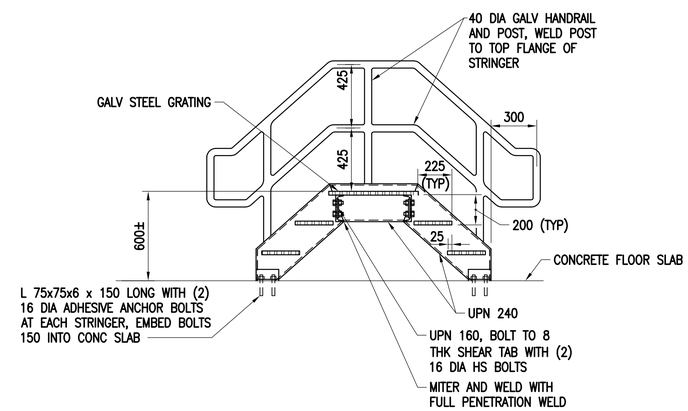

SECTION (B4)

SCALE: 1:20 S-514

GRAPHIC SCALE(S):

1:20 0 400 1000 2000 mm

SYM	DESCRIPTION	DATE	APPR

NAVFAC

COMMONWEALTH OF VIRGINIA
ANDREW C. SWENCK
Lic. No.051635
04-01-16
PROFESSIONAL ENGINEER
SEAL

Austin Brockenbrough
ENGINEERING • CONSULTING
A/E INFO

APPROVED
FOR COMMANDER NAVFAC 4/07/2016
ACTIVITY
SATISFACTORY TO DATE
DES ACS DRW WMG CHK GCD
<<PM/DM>>
BRANCH MANAGER KCK
CHIEF ENG/ARCH
<<XXX>> MFR

DEPARTMENT OF THE NAVY
NAVAL FACILITIES ENGINEERING COMMAND
NAVAL FACILITIES ENGINEERING COMMAND
NORFOLK, VIRGINIA
ATLANTIC DIVISION
CAMP LEMONNIER
DJIBOUTI AFRICA

DESC 1701/P-1701
CONSTRUCT FUEL STORAGE FACILITIES

PIPE CROSSOVERS PLAN AND SECTIONS

SCALE: AS NOTED
PROJECT NO.:
WORK ORDER NO.
NAVFAC DRAWING NO.
14047045
SHEET 81 OF 186
S-514

DRAWFORM REVISION: 10 MARCH 2009

FILE NAME: G:\14 Jobs\14-013 Djibouti - Fuel Storage Facility - NAVFAC LANT\CAD AutoCAD\S\S-514 PIPE CROSSOVERS PLAN AND SECTIONS.dwg LAYOUT NAME: PIPE CROSSOVERS PLAN AND SECTIONS PLOTTED: Thursday, March 31, 2016 - 9:50am USER: wfermann