FIRE ALARM SYSTEM GENERAL NOTES

1. GENERAL SCOPE – PROVIDE AN ADDRESSABLE FIRE ALARM SYSTEM FOR THE FILTER BUILDING AND PUMP HOUSE BUILDINGS. PROVIDE A COMBINED FIRE ALARM/MASS NOTIFICATION SYSTEM FOR THE OPS BUILDING.
2. APPLICABLE CODES:

UFC 1–200–01	UNIFIED FACILITIES CRITERIA – GENERAL BUILDING REQUIREMENTS, 1 SEPT 2013.
UFC 3–600–01	UNIFIED FACILITIES CRITERIA – FIRE PROTECTION ENGINEERING FOR FACILITIES, 1 MAR 2013.
UFC 3–600–10N	FIRE PROTECTION ENGINEERING, FINAL DRAFT, AUGUST 2007.
UFC 4–021–01	DESIGN AND O&M: MASS NOTIFICATION SYSTEMS, 1 JANUARY 2010.
NFPA 70	NATIONAL ELECTRIC CODE (NEC) 2014.
NFPA 72	NATIONAL FIRE ALARM CODE, 2013.

3. IF A CONFLICT OCCURS BETWEEN THE SPECIFICATIONS, THE CONTRACT DRAWINGS, AND NFPA 72, THE MORE STRINGENT REQUIREMENT SHALL APPLY.
4. NEW DEVICES SHALL BE UL LISTED.
5. SIGNALING LINE AND NOTIFICATION APPLIANCE CIRCUITS SHALL BE CLASS A. INITIATING DEVICE CIRCUITS MAY BE CLASS B.
6. ALL NEW CONDUIT AND BACK BOXES SHALL BE CONCEALED UNLESS OTHERWISE NOTED. ALL NEW JUNCTION BOXES SHALL HAVE RED PAINTED COVER PLATES IN UNFINISHED AREAS. ALL NEW JUNCTION BOXES SHALL HAVE A PERMANENT, MACHINE PRINTED LABEL READING "FIRE ALARM CIRCUIT" ON THE INSIDE COVER. ALL FIRE ALARM CONDUITS (CONCEALED) SHALL BE MARKED WITH 3/4–IN RED BANDS EVERY 10 FEET, AT EACH SIDE OF A FLOOR, WALL, OR CEILING PENETRATION.
7. ALL SYSTEM POWER AND GROUND CIRCUITS SHALL BE TYPE "THHN" SOLID COPPER SIZED ACCORDING TO THE MANUFACTURER'S RECOMMENDATIONS AND THE APPLICABLE CODES AND BE INSTALLED IN EMT TYPE CONDUIT.
8. ALL WIRING, CABLES, BOXES, TROUGHS AND OTHER RELATED EQUIPMENT SHALL BE INSTALLED IN STRICT COMPLIANCE WITH THE NATIONAL ELECTRICAL CODE (NEC).
9. ALL PENETRATIONS OF FIRE RESISTANCE RATED BARRIERS, WALLS, AND, SHAFT/ASSEMBLIES SHALL BE DRILLED AND THEN SEALED WITH AN APPROVED UL FIRE–RATED THROUGH–PENETRATION ASSEMBLY.
10. UL CLASSIFICATIONS AND MATERIAL PRODUCT DATA SHEETS FOR ALL FIRE STOPPING SYSTEMS SHALL BE SUBMITTED AND APPROVED BEFORE ANY FIRE STOPPING IS INSTALLED.
11. WHERE CEILING HEIGHTS ALLOW, WALL–MOUNTED VISIBLE AND COMBINATION AUDIBLE/VISIBLE ALARM NOTIFICATION APPLIANCES SHALL BE MOUNTED NOT LESS THAN 90–INCHES ABOVE THE FINISHED FLOOR MEASURED OR 6–INCHES BELOW THE CEILING MEASURED TO THE TOP OF THE LENS (WHICH EVER IS LOWER).
12. MOUNT EXTERIOR SPEAKERS APPROXIMATELY 96–INCHES ABOVE GROUND LEVEL.
13. VISIBLE DEVICES AND VISIBLE/AUDIBLE APPLIANCES SHALL UTILIZE A CLEAR STROBE.
14. SYNCHRONIZE ALL VISIBLE NOTIFICATION APPLIANCES WITHIN A COMMON VIEWING AREA IN ACCORDANCE WITH NFPA 72.
15. SOUND PRESSURE LEVEL FROM AUDIBLE ALARM APPLIANCES SHALL NOT EXCEED 110 DBA IN ANY OCCUPIED AREA.
16. 25% SPARE CAPACITY SHALL BE PROVIDED ON POWER SUPPLIES AND INDIVIDUAL CIRCUITS.
17. 50% SPARE CAPACITY SHALL BE PROVIDED ON AMPLIFIERS.
18. SECONDARY POWER SUPPLY SHALL BE VIA LEAD CALCIUM OR SEALED LEAD ACID BATTERY CAPABLE OF OPERATING THE SYSTEM ON STANDBY FOR 48 HOURS FOLLOWED BY 10 MINUTES WITH THE SYSTEM AT FULL CAPACITY. CHARGING AND METERING SHALL BE PROVIDED IN ACCORDANCE WITH NFPA 72.
19. PROVIDE MONITOR MODULE TO SUPERVISE ALL SPRINKLER VALVE TAMPER SWITCHES, FLOW/PRESSURE SWITCHES. COORDINATE EXACT LOCATION WITH SPRINKLER CONTRACTOR.
20. LOCATE DUCT DETECTORS AND REMOTE TESTING STATIONS AT THE NEW AIR HANDLING UNITS. SEE MECHANICAL DRAWINGS FOR EXACT LOCATIONS OF AIR HANDLING UNITS.
21. ALL DRAWINGS ARE CONCEPTUAL IN NATURE. THEY DO NOT SHOW THE EXACT LOCATIONS OF COMPONENTS NOR SHOW ALL SYSTEM COMPONENTS. CONTRACTOR SHALL PROVIDE ADDITIONAL COMPONENTS FOR A PROPERLY INSTALLED AND FUNCTIONAL SYSTEM IN ACCORDANCE WITH ALL APPLICABLE CODES.
22. PROVIDE LINE ISOLATORS AT THE BEGINNING AND END OF EACH SLC LOOP. PROVIDE AT LEAST 1 LINE ISOLATOR EVERY 20 DEVICES.

MASS NOTIFICATION SYSTEM GENERAL NOTES (OPS BUILDING ONLY)

1. ALL AUDIBLE DEVICES MUST BE INTELLIGIBLE WITH A CIS RATING GREATER THAN 0.7. AN STI RATING OF 0.5 IS CONSIDERED EQUIVALENT TO A CIS RATING OF 0.7. CIS RATINGS LESS THAN 0.7 MAY BE PERMITTED IN AREAS WITH EXCESSIVE HARD SURFACES PROVIDED A CIS RATING GREATER THAN 0.7 IS ACHIEVED WITHIN A 33 FT TRAVEL DISTANCE. NORMALLY UNOCCUPIED AREAS MAY BE PERMITTED TO HAVE A CIS SCORE LESS THAN 0.7 PROVIDED ACCEPTABLE CIS SCORE CAN BE REACHED WITHIN 50 FT TRAVEL DISTANCE.
2. SECONDARY POWER SUPPLY SHALL BE VIA LEAD CALCIUM OR SEALED LEAD ACID BATTERY CAPABLE OF OPERATING THE SYSTEM ON STANDBY FOR 48 HOURS FOLLOWED BY 15 MINUTES WITH THE SYSTEM AT FULL CAPACITY. CHARGING AND METERING SHALL BE PROVIDED IN ACCORDANCE WITH NFPA 72.

FIRE ALARM LEGEND

	ADDRESSABLE PHOTOELECTRIC SMOKE DETECTOR
	ADDRESSABLE DUCT SMOKE DETECTOR
	HEAT DETECTOR
P	ADDRESSABLE DOUBLE–ACTION MANUAL FIRE ALARM BOX
CD	WALL–MOUNT COMBINATION SPEAKER WITH CLEAR FIRE ALARM STROBE MARKED WITH "ALERT" (CANDELA RATING AS NOTED)
CD	WALL–MOUNT CLEAR FIRE ALARM STROBE MARKED WITH "ALERT" (CANDELA RATING AS NOTED)
	WALL–MOUNT SPEAKER NOTIFICATION APPLIANCE
CD	CEILING–MOUNT COMBINATION SPEAKER WITH CLEAR FIRE ALARM STROBE MARKED WITH "ALERT" (CANDELA RATING AS NOTED)
CD	WALL–MOUNT COMBINATION HORN WITH FIRE ALARM STROBE MARKED "FIRE" (CANDELA RATING AS NOTED)
CD	WALL–MOUNT CLEAR FIRE ALARM STROBE MARKED WITH "FIRE" (CANDELA RATING AS NOTED)
	WALL–MOUNT HORN NOTIFICATION APPLIANCE
S	CEILING–MOUNT SPEAKER NOTIFICATION APPLIANCE
FACP	FIRE ALARM CONTROL PANEL
FMCP	FIRE ALARM/MASS NOTIFICATION CONTROL PANEL
MM	ADDRESSABLE MONITOR MODULE
LOC	LOCAL OPERATORS CONSOLE
TC	TEXT CONTROLLER
TRN	BASEWIDE TRANSMITTER (COMPATIBLE WITH WAVES MNS SYSTEM)
RAT	RADIO ALARM TRANSMITTER
LED	REMOTE TEST SWITCH
ANN	FIRE ALARM ANNUNCIATOR
TEXT	EVACUATE/ANNOUNCEMENT SIGN
I	LINE ISOLATOR
	SPRINKLER VALVE SUPERVISORY SWITCH
	SPRINKLER WATERFLOW SWITCH
WP	WEATHERPROOF

SYM	DESCRIPTION	DATE	APPR

NAVFAC

COMMONWEALTH OF VIRGINIA
ALISON WAKELIN
Lic. No. 037705
1/28/2016
PROFESSIONAL ENGINEER
SEAL

Austin Brockenbrough
ENGINEERING • CONSULTING

A/E INFO.

APPROVED
FOR COMMANDER NAVFAC 4/07/2016

ACTIVITY
EMAIL BY ANDREA LEMON
SATISFACTORY TO DATE 04/04/2016

DES AJW DRW HS CHK MW
<<PM/IM>> LET/RER
BRANCH MANAGER MCFR
CHIEF ENG/ARCH EJG
<<XXX>> MCFR

DEPARTMENT OF THE NAVY
NAVAL FACILITIES ENGINEERING COMMAND
ATLANTIC DIVISION
NAVAL FACILITIES ENGINEERING COMMAND
NORFOLK, VIRGINIA
CAMP LEMONNIER
DJIBOUTI AFRICA

DESC 1701/P-1701
CONSTRUCT FUEL STORAGE FACILITIES

FIRE ALARM GENERAL NOTES

SCALE: AS NOTED
PROJECT NO.:
WORK ORDER NO.
NAVFAC DRAWING NO.
14047068
SHEET 104 OF 186
FA001

DRAWFORM REVISION: 10 MARCH 2009

GENERAL NOTES

1. FIRE ALARM CIRCUITS FOR THESE BUILDINGS COME FROM THE FACP IN THE FILTER BUILDING.

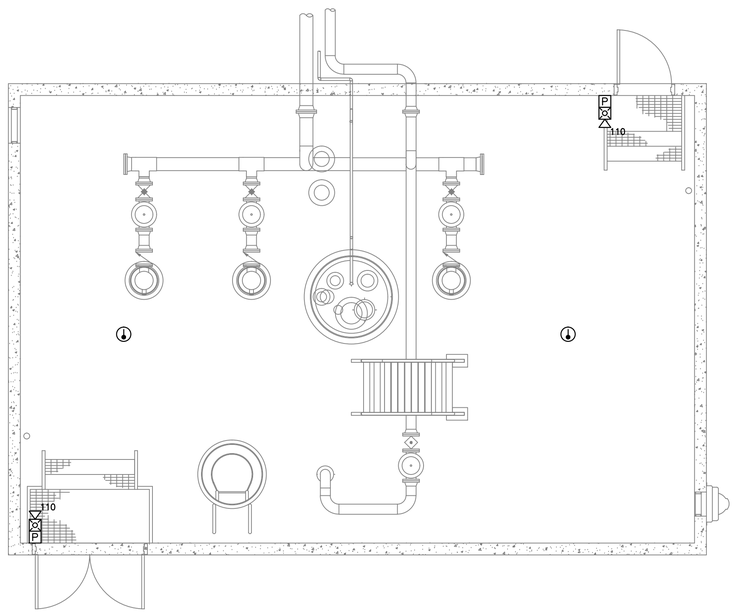

PLAN NORTH

PUMPHOUSE FIRE ALARM PLAN (1 / FA101)

SCALE: 1:50

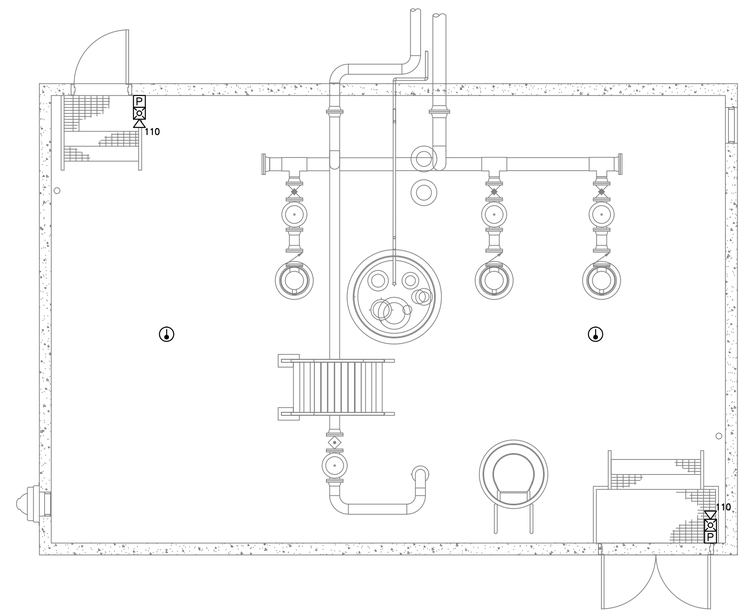

PLAN NORTH

PUMPHOUSE FIRE ALARM PLAN (2 / FA101)

SCALE: 1:50

GRAPHIC SCALE(S):

1:50 — 0 1000 2000 5000 mm

SYM	DESCRIPTION	DATE	APPR

NAVFAC

COMMONWEALTH OF VIRGINIA
ALISON WAKELIN
Lic. No. 037705
1/28/2016
PROFESSIONAL ENGINEER
SEAL

Austin Brockenbrough
ENGINEERING • CONSULTING
A/E INFO.

APPROVED
FOR COMMANDER NAVFAC 4/07/2016
ACTIVITY
SATISFACTORY TO DATE

DES AJW DRW HS CHK MW
<<PM/DM>>
BRANCH MANAGER MFU
CHIEF ENG/ARCH
<<XXX>> MFU

DEPARTMENT OF THE NAVY
NAVAL FACILITIES ENGINEERING COMMAND
ATLANTIC DIVISION
CAMP LEMONNIER
NAVAL FACILITIES ENGINEERING COMMAND
NORFOLK, VIRGINIA
DJIBOUTI AFRICA

DESC 1701/P-1701
CONSTRUCT FUEL STORAGE FACILITIES

PUMP BUILDING FIRE ALARM PLAN

SCALE: AS NOTED
PROJECT NO.:
WORK ORDER NO.
NAVFAC DRAWING NO. 14047069
SHEET 105 OF 186

FA101

DRAWFORM REVISION: 10 MARCH 2009

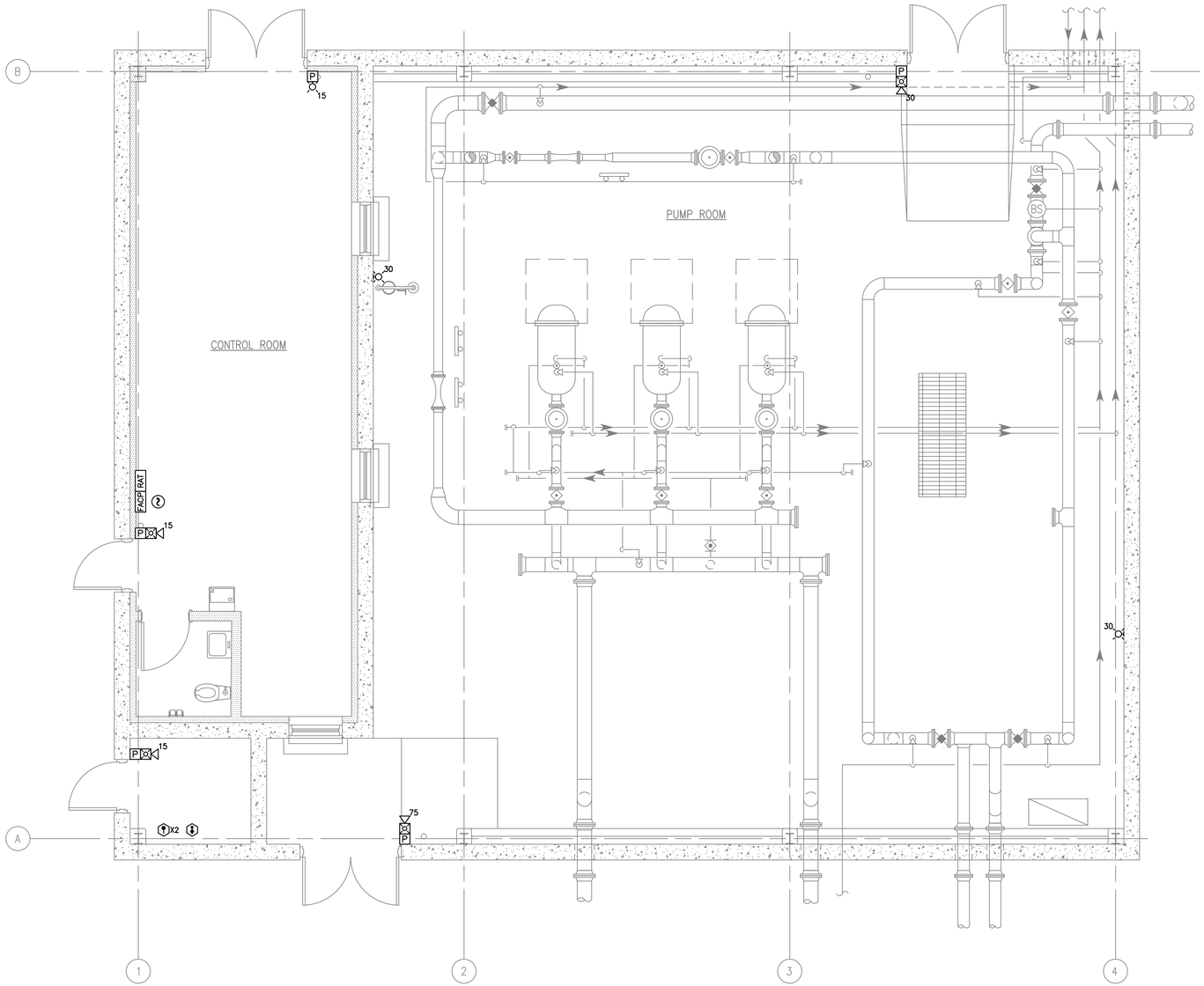

FILTER BUILDING FIRE ALARM PLAN (1 / FA102)

SCALE: 1:50

GRAPHIC SCALE(S):

1:50 0 1000 2000 5000 mm

SYM	DESCRIPTION	DATE	APPR

NAVFAC

COMMONWEALTH OF VIRGINIA
ALISON WAKELIN
Lic. No. 037705
1/28/2016
PROFESSIONAL ENGINEER
SEAL

Austin Brockenbrough
ENGINEERING • CONSULTING
A/E INFO

APPROVED
FOR COMMANDER NAVFAC 4/07/2016
ACTIVITY
SATISFACTORY TO DATE
DES AJW DRW HS CHK MW
<<PM/DM>>
BRANCH MANAGER
CHIEF ENG/ARCH
<<XX>>

DEPARTMENT OF THE NAVY
NAVAL FACILITIES ENGINEERING COMMAND
ATLANTIC DIVISION
NAVAL FACILITIES ENGINEERING COMMAND
NORFOLK, VIRGINIA
CAMP LEMONNIER
DJIBOUTI AFRICA

DESC 1701/P-1701
CONSTRUCT FUEL STORAGE FACILITIES

FILTER BUILDING FIRE ALARM PLAN

SCALE: AS NOTED
PROJECT NO.:
WORK ORDER NO.
NAVFAC DRAWING NO.: 14047070
SHEET 106 OF 186
FA102

DRAWFORM REVISION: 10 MARCH 2009

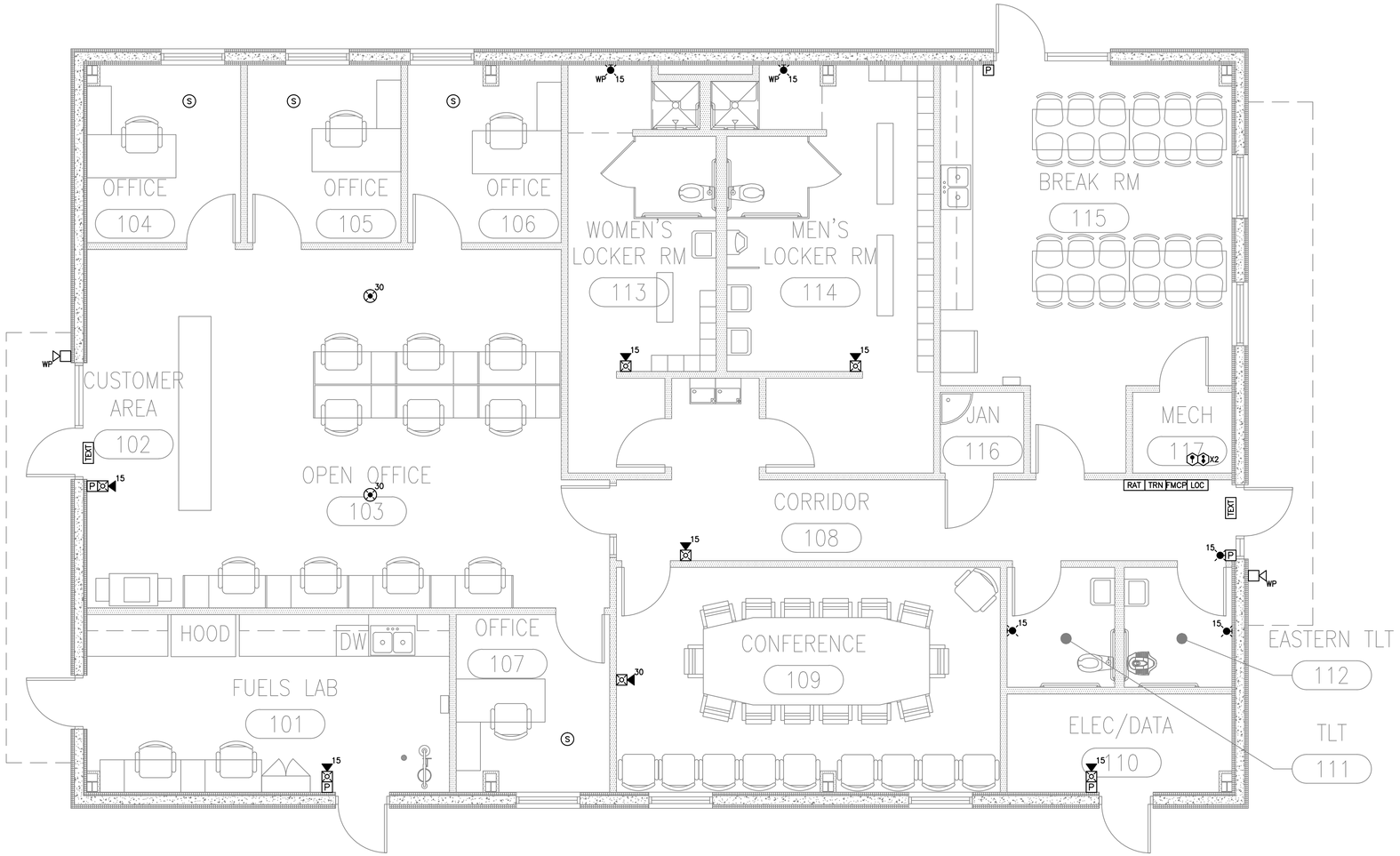

PLAN NORTH

OPS BUILDING FIRE ALARM PLAN

SCALE: 1:50

1 FA103

GRAPHIC SCALE(S):

1:50 0 1000 2000 5000 mm

SYM	DESCRIPTION	DATE	APPR

NAVFAC

COMMONWEALTH OF VIRGINIA
ALISON WAKELIN
Lic. No. 037705
1/28/2016
PROFESSIONAL ENGINEER
SEAL

Austin Brockenbrough
ENGINEERING • CONSULTING

A/E INFO

APPROVED
FOR COMMANDER NAVFAC 4/07/2016
ACTIVITY
SATISFACTORY TO DATE
DES AJW DRW HS CHK MW
<<PM/DM>>
BRANCH MANAGER MFU
CHIEF ENG/ARCH
<<XX>> MFU

DEPARTMENT OF THE NAVY
NAVAL FACILITIES ENGINEERING COMMAND
ATLANTIC DIVISION
NAVAL FACILITIES ENGINEERING COMMAND
NORFOLK, VIRGINIA
CAMP LEMONNIER
DJIBOUTI AFRICA

DESC 1701/P-1701
CONSTRUCT FUEL STORAGE FACILITIES

OPS BUILDING FIRE ALARM PLAN

SCALE: AS NOTED
PROJECT NO.:
WORK ORDER NO.
NAVFAC DRAWING NO. 14047071
SHEET 107 OF 186
FA103

DRAWFORM REVISION: 10 MARCH 2009

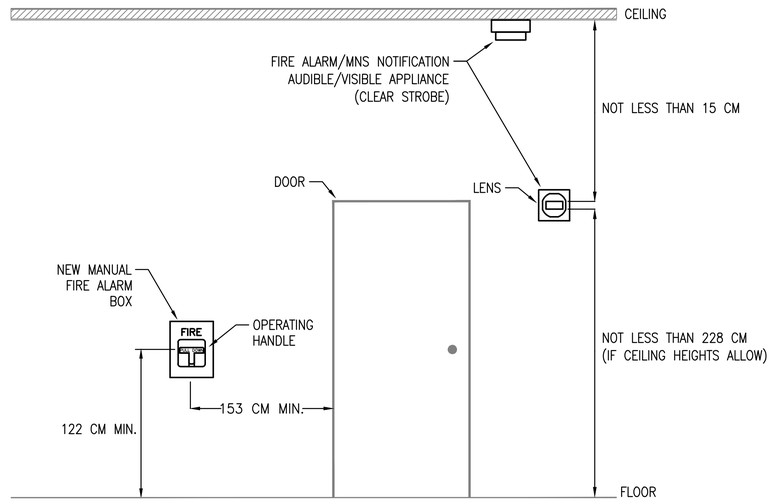

TYPICAL MOUNTING DETAIL FOR FIRE ALARM AND MNS EQUIPMENT (1 / FA501)

SCALE: NTS

ALL STROBES AND SPEAKER STROBES SHALL BE INSTALLED WHERE INDICATED ON THE FIRE PROTECTION PLANS. THE ELECTRICAL CONTRACTOR SHALL PROVIDE THE NECESSARY MOUNTING HARDWARE TO ACHIEVE THIS PURPOSE.

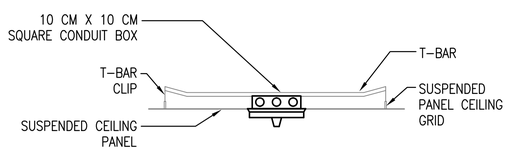

CEILING SPEAKER/STROBE MOUNTING (2 / FA501)

SCALE: NTS

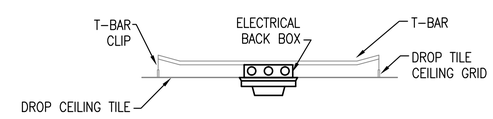

SMOKE DETECTOR FLUSH MOUNT DETAIL (3 / FA501)

SCALE: NTS

SYM	DESCRIPTION	DATE	APPR

NAVFAC

COMMONWEALTH OF VIRGINIA
ALISON WAKELIN
Lic. No. 037705
1/28/2016
PROFESSIONAL ENGINEER
SEAL

Austin Brockenbrough
ENGINEERING • CONSULTING

A/E INFO

APPROVED
FOR COMMANDER NAVFAC 4/07/2016

ACTIVITY

SATISFACTORY TO DATE

DES AJW DRW HS CHK MW

<<PM/DM>>

BRANCH MANAGER MFU

CHIEF ENG/ARCH

<<XXX>> MFU

DEPARTMENT OF THE NAVY
NAVAL FACILITIES ENGINEERING COMMAND
ATLANTIC DIVISION
NAVAL FACILITIES ENGINEERING COMMAND
NORFOLK, VIRGINIA
CAMP LEMONNIER
DJIBOUTI AFRICA

DESC 1701/P-1701
CONSTRUCT FUEL STORAGE FACILITIES

FIRE ALARM DETAILS

SCALE: AS NOTED

PROJECT NO.:

WORK ORDER NO.

NAVFAC DRAWING NO.
14047072

SHEET 108 OF 186

FA501

DRAWFORM REVISION: 10 MARCH 2009

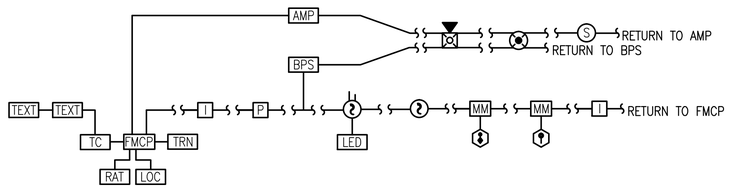

FIRST FLOOR

NOTE: NOT ALL FIRE ALARM DEVICES, APPLIANCES AND CIRCUITS ARE DEPICTED IN RISER DIAGRAM. PROVIDE AT LEAST 1 LINE ISOLATOR DEVICE EVERY 20 DEVICES.

OPS BUILDING FIRE ALARM RISER DIAGRAM

SCALE: NTS

1 / FA502

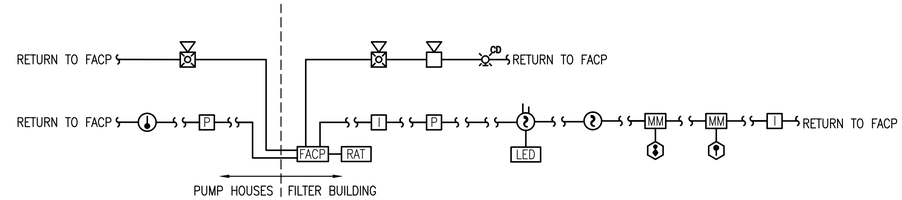

FIRST FLOOR

NOTE: NOT ALL FIRE ALARM DEVICES, APPLIANCES AND CIRCUITS ARE DEPICTED IN RISER DIAGRAM. PROVIDE AT LEAST 1 LINE ISOLATOR DEVICE EVERY 20 DEVICES.

FILTER AND PUMP HOUSE BUILDINGS FIRE ALARM RISER DIAGRAM

SCALE: NTS

2 / FA502

FIRE ALARM INPUT / OPERATION	ACTIVATE AUDIBLE FIRE ALARM EVACUATION THROUGHOUT BUILDING	ACTIVATE AUDIO CIRCUITS AND BROADCAST MNS MESSAGE	ACTIVATE VISUAL ALERT/FIRE STROBES THROUGHOUT BUILDING	ACTIVATE "EVACUATE" MESSAGE ON TEXT SIGNS (IF INSTALLED)	ACTIVATE "ANNOUNCEMENT" MESSAGE ON TEXT SIGNS [2] (IF INSTALLED)	ALARM CONDITION AT FACU	SUPERVISORY CONDITION AT FACU	MNS SUPERVISORY FIRE ALARM OVERRIDE CONDITION AT FACU [3]	TROUBLE CONDITION AT FACU	TRANSMIT SIGNAL TO REMOTE STATION VIA BASEWIDE TRANSMITTER	SHUT DOWN AIR HANDLING UNIT
MANUAL PULL STATION	●		●	●		●				●	
AUTOMATIC SPRINKLER FLOW SWITCH	●		●	●		●				●	
AUTOMATIC SPRINKLER SYSTEM TAMPER SWITCH							●			●	
AREA SMOKE DETECTOR ACTIVATION	●		●	●		●				●	
DUCT SMOKE DETECTOR ACTIVATION							●			●	●
FACU CIRCUIT FAULT (OPEN, GROUND, SHORT)									●	●	
OTHER TROUBLE CONDITION									●	●	
MASS NOTIFICATION INPUT											
ACU/LOC EMERGENCY LIVE PAGING [1]		●	●		●			●			
WIDE AREA MNS NON-EMERGENCY MESSAGE BROADCAST		●									
WIDE AREA MNS EMERGENCY MESSAGE BROADCAST [1]		●	●		●			●			
NON-EMERGENCY LIVE PAGING		●									
DOD TELEPHONE SYSTEM NON-EMERGENCY PAGING		●									

GENERAL: CONTRACTORS SHALL BE RESPONSIBLE TO ENSURE MNS AND FA PRIORITIES ARE PROGRAMMED IN ACCORDANCE WITH UFC 4-021-01

1. EMERGENCY MNS MESSAGES SHALL TEMPORARILY OVERRIDE FIRE ALARM AUDIBLE EVACUATION.
2. "ANNOUNCEMENT" MESSAGE ON TEXT SIGNS SHALL STAY ILLUMINATED FOR 10 SECONDS BEYOND THE END OF MESSAGE.
3. SUPERVISORY CONDITION ONLY OCCURS WHEN MNS SYSTEM IS OVERRIDING FIRE ALARM EVACUATION (ALARM CONDITION).

FIRE ALARM/MNS SEQUENCE OF OPERATIONS

SCALE: NTS

3 / FA502

SYM	DESCRIPTION	DATE	APPR

NAVFAC

COMMONWEALTH OF VIRGINIA
ALISON WAKELIN
Lic. No. 037705
1/28/2016
PROFESSIONAL ENGINEER
SEAL

Austin Brockenbrough
ENGINEERING • CONSULTING
A/E INFO.

APPROVED
FOR COMMANDER NAVFAC 4/07/2016
ACTIVITY
SATISFACTORY TO DATE
DES AJW DRW HS CHK MW
<<PM/DM>>
BRANCH MANAGER MFU
CHIEF ENG/ARCH
<<XXX>> MFU

DEPARTMENT OF THE NAVY
NAVAL FACILITIES ENGINEERING COMMAND
NAVAL FACILITIES ENGINEERING COMMAND NORFOLK, VIRGINIA
ATLANTIC DIVISION
CAMP LEMONNIER DJIBOUTI AFRICA

DESC 1701/P-1701
CONSTRUCT FUEL STORAGE FACILITIES

FIRE ALARM DETAILS

SCALE: AS NOTED
PROJECT NO.:
WORK ORDER NO.
NAVFAC DRAWING NO. 14047073
SHEET 109 OF 186
FA502

DRAWFORM REVISION: 10 MARCH 2009

FIRE PROTECTION (FP) GENERAL NOTES

1. GENERAL SCOPE – PROVIDE A WET PIPE SPRINKLER SYSTEM FOR FILTER, AND OPS BUILDINGS.

2. APPLICABLE CODES:

UFC 1–200–01	UNIFIED FACILITIES CRITERIA – GENERAL BUILDING REQUIREMENTS, 1 SEPTEMBER 2013.
UFC 3–600–01	UNIFIED FACILITIES CRITERIA – FIRE PROTECTION ENGINEERING FOR FACILITIES, 1 MARCH 2013.
UFC 3–600–10N	UNIFIED FACILITIES CRITERIA – FIRE PROTECTION ENGINEERING, AUGUST 2007.
NFPA 13	INSTALLATION OF SPRINKLER SYSTEMS, 2013.

3. IF A CONFLICT OCCURS BETWEEN THE SPECIFICATIONS, THE CONTRACT DRAWINGS, OR NFPA CODES, THE MORE STRINGENT REQUIREMENT SHALL APPLY.

4. THE CONTRACTOR SHALL HAVE A DESIGNER WITH A NICET LEVEL III CERTIFICATION IN WATER–BASED FIRE PROTECTION SYSTEM LAYOUT OR A LICENSED PROFESSIONAL FIRE PROTECTION ENGINEER IN RESPONSIBLE CHARGE OF THE SYSTEM DESIGN.

5. WET PIPE SPRINKLER PIPE SHALL BE U.L. LISTED BLACK STEEL, MINIMUM SCHEDULE 40 FOR ALL PIPE DIAMETERS EXCEPT WHERE A WATER QUALITY EVALUATION HAS BEEN DONE PERTAINING TO CORROSION. IF THE WATER QUALITY PERMITS, SCHEDULE 10 STEEL PIPING MAY BE USED FOR PIPE DIAMETERS NOMINALLY 50MM AND GREATER.

6. PENDENT SPRINKLERS INSTALLED IN FINISHED AREAS SHALL BE ORDINARY TEMPERATURE, CONCEALED WITH A WHITE PLATE.

7. PROVIDE QUICK–RESPONSE SPRINKLERS IN ALL SPACES.

8. ALL AREAS ARE HAZARD CATEGORY 1 UNLESS OTHERWISE INDICATED ON CONTRACT DRAWINGS.

9. PROVIDE A MINIMUM OF TWO SPARE SPRINKLERS OF EACH TYPE AND TEMPERATURE CLASSIFICATION. PROVIDE SPARE SPRINKLER CABINET, WRENCHES, AND POSTED LIST OF ITEMS WITHIN THE CABINET. INSTALL IN LOCATION AS DIRECTED BY BUILDING MAINTENANCE PERSONNEL.

10. SPRINKLER COVERAGE SHALL BE HYDRAULICALLY DESIGNED.

11. ALL PIPE PENETRATIONS THROUGH FIRE RATED BARRIERS SHALL BE PROVIDED WITH U.L. LISTED FIRE STOP SYSTEMS. THIS INCLUDES BUT IS NOT LIMITED TO STAIRS, FLOORS, CEILINGS, AND SHAFTS.

12. UL CLASSIFICATIONS AND MATERIAL PRODUCT DATA SHEETS FOR ALL FIRE STOPPING SYSTEMS SHALL BE SUBMITTED AND APPROVED BEFORE ANY FIRE STOPPING IS INSTALLED.

13. AVAILABLE WATER SUPPLY TEST DATA IS AS FOLLOWS:
    DATE TEST PERFORMED: 1/15/2016
    LOCATION: HYDRANTS W117/FH43 AND W115/FH44 LOCATED ON 200 MM SUPPLY MAIN PLAN EAST OF EXISTING SATELLITE FIRE STATION BLDG 720.
    RESULTS:
    TEST HYDRANT W117/FH43: STATIC: 4.83 BAR RESIDUAL: 4.00 BAR
    FLOW HYDRANT W115/FH44: FLOW: 57.48 L/SEC

14. THESE DRAWINGS DEMONSTRATE THE CONFIGURATION OF MAJOR SYSTEM COMPONENTS. THEY ARE DIAGRAMMATIC IN NATURE AND ARE NOT INTENDED TO SHOW EXACT LOCATIONS. PIPE LENGTHS AND ELEVATIONS INDICATED ON THE DRAWINGS (IF SHOWN) ARE APPROXIMATE. COORDINATE FINAL INSTALLATION WITH ACTUAL FIELD CONDITIONS AND OTHER CONSTRUCTION TRADES. THE CONTRACTOR SHALL DESIGN THE SPRINKLER SYSTEM TO PROVIDE COMPLETE PROTECTION THROUGHOUT IN ACCORDANCE WITH NFPA13.

FIRE PROTECTION LEGEND

- SPRINKLER PIPE
- UNDERGROUND PIPE
- SPRINKLER PIPING TO BE DEMOLISHED
- TEE DOWN
- PIPE CAP/FLUSHING CONNECTION
- SYSTEM RISER/STANDPIPE RISER
- UPRIGHT SPRINKLER
- (XX) HAZARD CLASSIFICATION

OCCUPANCY HAZARD LEGEND

ALL AREAS ARE HAZARD CATEGORY 1 UNLESS NOTED OTHERWISE. A MINIMUM DENSITY OF 3.8 MM/MIN. WITH A DESIGN AREA OF 139.4 SQ. M. AND A HOSE ALLOWANCE OF 946 L/MIN. SHALL BE USED.

(HC2) HAZARD CATEGORY 2 OCCUPANCY. A MINIMUM DENSITY OF 7.6 MM/MIN WITH A DESIGN AREA OF 232.3 SQ. M. AND A HOSE ALLOWANCE OF 946 L/MIN. SHALL BE USED.

(LAB) ORDINARY HAZARD GROUP 2 OCCUPANCY. A MINIMUM DENSITY OF 7.6 MM/MIN WITH A DESIGN AREA OF 139.4 SQ. M. AND A HOSE ALLOWANCE OF 946 L/MIN SHALL BE USED.

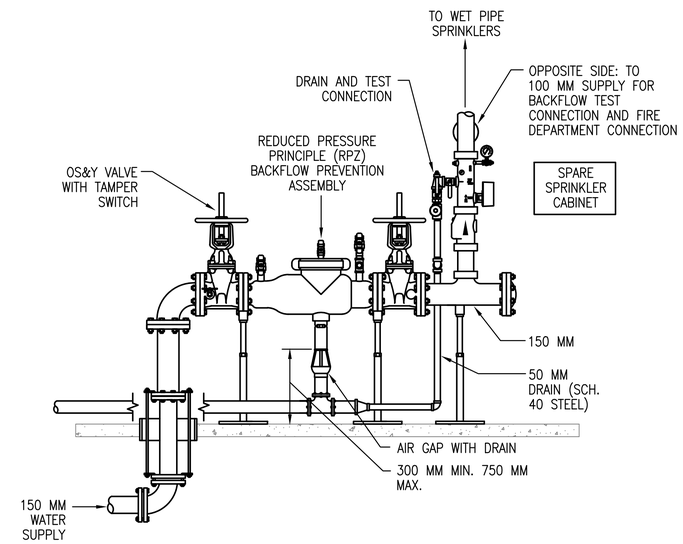

SPRINKLER RISER DETAIL (1 / FP001)
SCALE: NTS

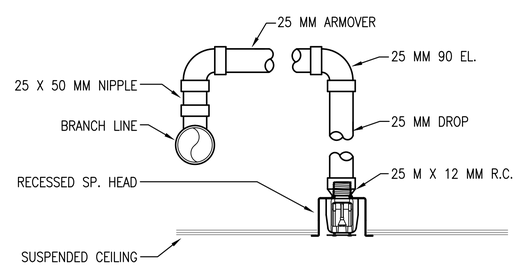

TYPICAL RECESSED SPRINKLER (2 / FP001)
SCALE: NTS

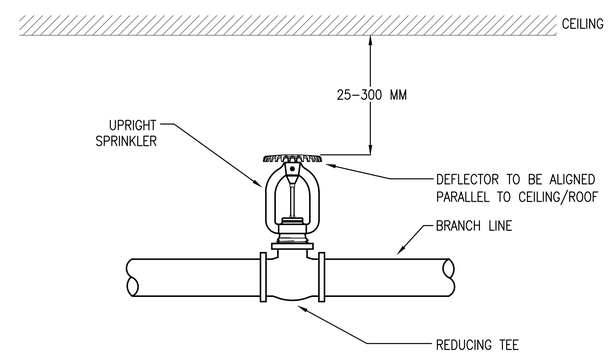

TYPICAL UPRIGHT SPRINKLER (3 / FP001)
SCALE: NTS

SYM	DESCRIPTION	DATE	APPR

NAVFAC

COMMONWEALTH OF VIRGINIA
ALISON WAKELIN
Lic. No. 037705
1/28/2016
PROFESSIONAL ENGINEER
SEAL

Austin Brockenbrough
ENGINEERING • CONSULTING

A/E INFO.

APPROVED
FOR COMMANDER NAVFAC 4/07/2016
ACTIVITY
SATISFACTORY TO DATE

DES AJW DRW HS CHK MW
<<PM/DM>>
BRANCH MANAGER MFU
CHIEF ENG/ARCH
<<XXX>> MFU

DEPARTMENT OF THE NAVY
NAVAL FACILITIES ENGINEERING COMMAND
NAVAL FACILITIES ENGINEERING COMMAND
NORFOLK, VIRGINIA
ATLANTIC DIVISION
CAMP LEMONNIER
DJIBOUTI AFRICA
DESC 1701/P-1701
CONSTRUCT FUEL STORAGE FACILITIES
FIRE PROTECTION GENERAL NOTES

SCALE: AS NOTED
PROJECT NO.:
WORK ORDER NO.
NAVFAC DRAWING NO. 14047074
SHEET 110 OF 186
FP001

DRAWFORM REVISION: 10 MARCH 2009

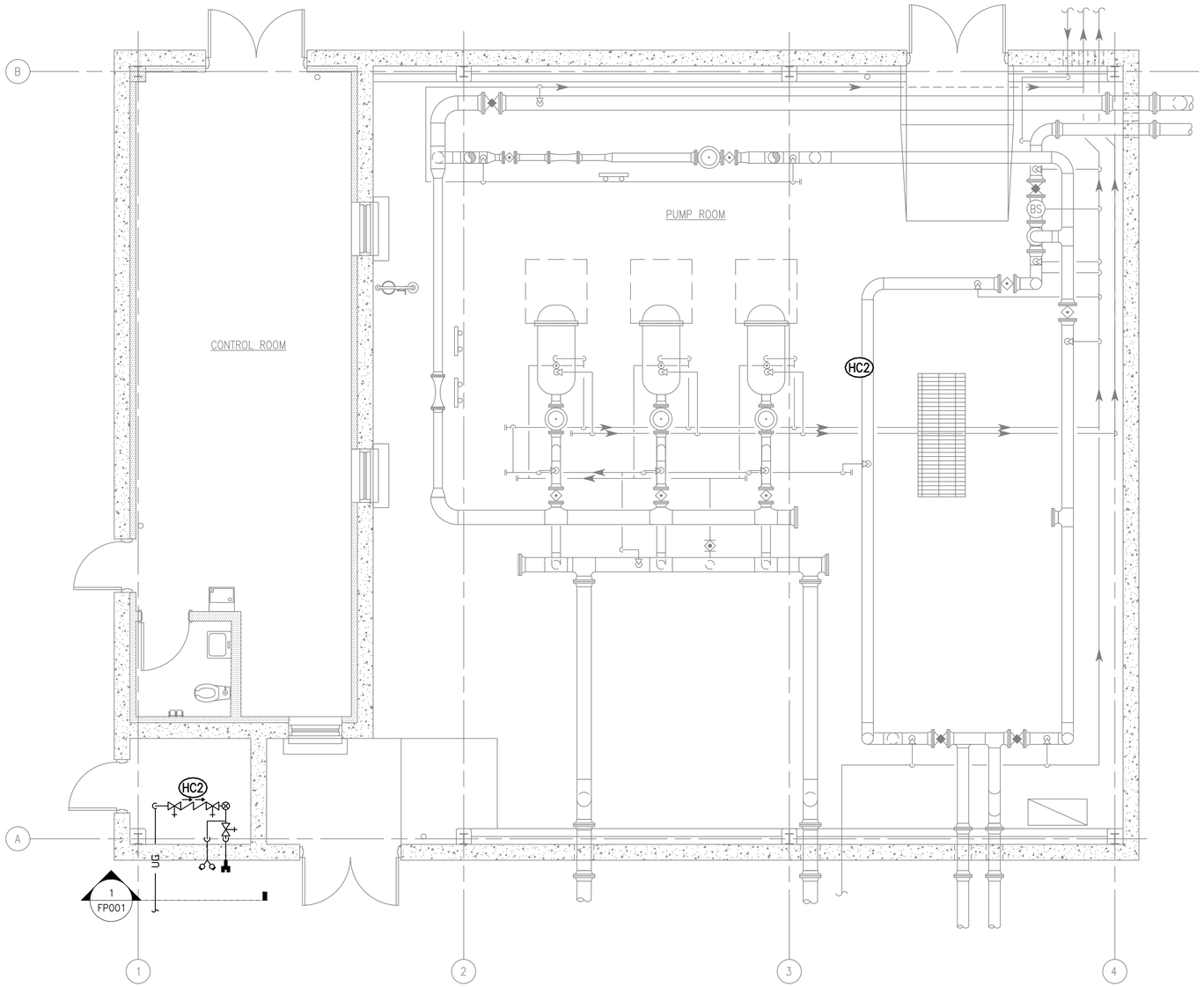

FILTER BUILDING FIRE PROTECTION PLAN (1 / FP102)

SCALE: 1:50

GRAPHIC SCALE(S):

1:50 — 0 1000 2000 5000 mm

SYM	DESCRIPTION	DATE	APPR

NAVFAC

COMMONWEALTH OF VIRGINIA
ALISON WAKELIN
Lic. No. 037705
1/28/2016
PROFESSIONAL ENGINEER
SEAL

Austin Brockenbrough
ENGINEERING • CONSULTING
A/E INFO

APPROVED
FOR COMMANDER NAVFAC 1/07/2016
ACTIVITY
SATISFACTORY TO DATE
DES AJW DRW HS CHK MW
<<PM/DM>>
BRANCH MANAGER
CHIEF ENG/ARCH
<<XX>>

DEPARTMENT OF THE NAVY
NAVAL FACILITIES ENGINEERING COMMAND
NAVAL FACILITIES ENGINEERING COMMAND
NORFOLK, VIRGINIA
ATLANTIC DIVISION
CAMP LEMONNIER
DJIBOUTI AFRICA

DESC 1701/P-1701
CONSTRUCT FUEL STORAGE FACILITIES

FILTER BUILDING FIRE PROTECTION PLAN

SCALE: AS NOTED
PROJECT NO.:
WORK ORDER NO.
NAVFAC DRAWING NO.: 14047075
SHEET 111 OF 186
FP101

DRAWFORM REVISION: 10 MARCH 2009

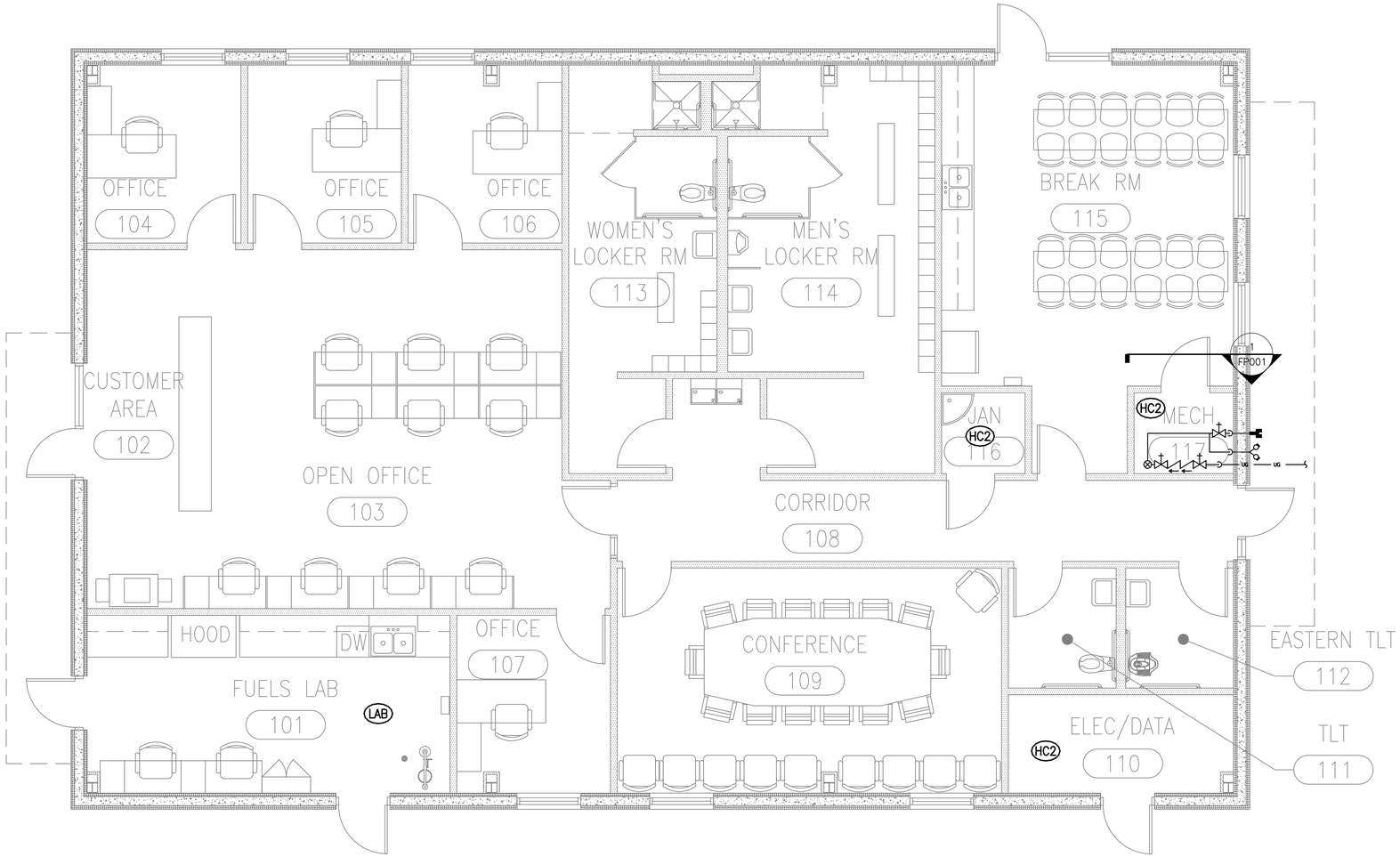

PLAN NORTH

OPS BUILDING FIRE PROTECTION PLAN

SCALE: 1:50

1 / FP103

GRAPHIC SCALE(S):

1:50 — 0 1000 2000 5000 mm

SYM	DESCRIPTION	DATE	APPR

NAVFAC

COMMONWEALTH OF VIRGINIA
ALISON WAKELIN
Lic. No. 037705
1/28/2016
PROFESSIONAL ENGINEER
SEAL

Austin Brockenbrough
ENGINEERING • CONSULTING

A/E INFO.

APPROVED
FOR COMMANDER NAVFAC 4/07/2016

ACTIVITY

SATISFACTORY TO DATE

DES AJW DRW HS CHK MW

<<PM/DM>>

BRANCH MANAGER

CHIEF ENG/ARCH

<<XX>>

DEPARTMENT OF THE NAVY
NAVAL FACILITIES ENGINEERING COMMAND
ATLANTIC DIVISION
NAVAL FACILITIES ENGINEERING COMMAND
NORFOLK, VIRGINIA
CAMP LEMONNIER
DJIBOUTI AFRICA

DESC 1701/P-1701
CONSTRUCT FUEL STORAGE FACILITIES

OPS BUILDING FIRE PROTECTION PLAN

SCALE: AS NOTED

PROJECT NO.:

WORK ORDER NO.

NAVFAC DRAWING NO.: 14047076

SHEET 112 OF 186

FP102

DRAWFORM REVISION: 10 MARCH 2009