NAVFAC ATLANTIC

WORK ORDER NO. 1344008

CONTRACT NO. N6247016R6004

P1701 Construct Fuel Storage Facilities

At the

Camp Lemonnier, Djibouti, Africa
VOLUME I

PREPARED BY:

Austin Brockenbrough & Associates, LLP
1011 Boulder Springs Drive, Suite 200
Richmond, VA 23225

A/E Contract No. 62583-10-D-0408, DO. JN02

Architectural:	Paul Shope, AIA	Mechanical:	Donald Nodes, PE
Civil:	Jonathan Pickral, PE	Electrical:	Ralph Keith, PE
Structural:	Gerald Dziedzic, PE	Fire Protection:	Alison Wakelin, PE
Geotechnical		Cathodic:	Jason Kadlec, PE

Submitted By: Date: 01/28/2016

APPROVED BY:

Specifications:

For Commander, NAVFAC:
Date: 04/07/2016

THIS PAGE HAS BEEN INTENTIONALLY LEFT BLANK

PROJECT TABLE OF CONTENTS

DIVISION 00 - PROCUREMENT AND CONTRACTING REQUIREMENTS

00 01 15 LIST OF DRAWINGS
00 73 04 SUPPLEMENTARY CONDITIONS FOR PROJECTS IN DJIBOUTI AREA

DIVISION 01 - GENERAL REQUIREMENTS

01 11 00 SUMMARY OF WORK
01 14 00 WORK RESTRICTIONS
01 20 00.00 20 PRICE AND PAYMENT PROCEDURES
01 30 00 ADMINISTRATIVE REQUIREMENTS
01 32 17.00 20 COST-LOADED NETWORK ANALYSIS SCHEDULES (NAS)
01 33 00 SUBMITTAL PROCEDURES
01 33 23.33 AVIATION FUEL SYSTEM SPECIFIC SUBMITTAL REQUIREMENTS
01 33 29 SUSTAINABILITY REPORTING
01 35 26 GOVERNMENTAL SAFETY REQUIREMENTS
01 35 29.13 HEALTH, SAFETY, AND EMERGENCY RESPONSE PROCEDURES FOR CONTAMINATED SITES
01 42 00 SOURCES FOR REFERENCE PUBLICATIONS
01 45 00.00 20 QUALITY CONTROL
01 50 00 TEMPORARY CONSTRUCTION FACILITIES AND CONTROLS
01 57 19.00 20 TEMPORARY ENVIRONMENTAL CONTROLS
01 58 00 PROJECT IDENTIFICATION
01 74 19 CONSTRUCTION AND DEMOLITION WASTE MANAGEMENT
01 78 00 CLOSEOUT SUBMITTALS
01 78 23 OPERATION AND MAINTENANCE DATA
01 78 23.33 OPERATION AND MAINTENANCE MANUALS FOR AVIATION FUEL SYSTEMS

DIVISION 02 - EXISTING CONDITIONS

02 41 00 DEMOLITION
02 56 13 WASTE CONTAINMENT GEOMEMBRANE
02 61 13 EXCAVATION AND HANDLING OF CONTAMINATED MATERIAL

DIVISION 03 - CONCRETE

03 11 19.00 10 INSULATING CONCRETE FORMING
03 30 00 CAST-IN-PLACE CONCRETE

DIVISION 05 - METALS

05 12 00 STRUCTURAL STEEL
05 21 00 STEEL JOIST FRAMING
05 30 00 STEEL DECKS
05 50 13 MISCELLANEOUS METAL FABRICATIONS
05 51 33 METAL LADDERS
05 52 00 METAL RAILINGS
05 59 10 ROLLING COVER FOR AVIATION REFUELING VAULTS
05 72 00 DECORATIVE METAL SPECIALTIES

DIVISION 06 - WOOD, PLASTICS, AND COMPOSITES

06 41 16.00 10 LAMINATE CLAD ARCHITECTURAL CASEWORK
06 61 16 SOLID POLYMER (SOLID SURFACING) FABRICATIONS

DIVISION 07 - THERMAL AND MOISTURE PROTECTION

07 12 00 BUILT-UP BITUMINOUS WATERPROOFING
07 21 13 BOARD AND BLOCK INSULATION
07 21 16 MINERAL FIBER BLANKET INSULATION
07 22 00 ROOF AND DECK INSULATION
07 53 23 ETHYLENE-PROPYLENE-DIENE-MONOMER ROOFING
07 60 00 FLASHING AND SHEET METAL
07 61 14.00 20 STEEL STANDING SEAM ROOFING
07 84 00 FIRESTOPPING
07 92 00 JOINT SEALANTS

DIVISION 08 - OPENINGS

08 11 13 STEEL DOORS AND FRAMES
08 11 16 ALUMINUM DOORS AND FRAMES
08 34 19.10 20 ROLLING SERVICE AND FIRE DOORS
08 51 13 ALUMINUM WINDOWS
08 71 00 DOOR HARDWARE
08 81 00 GLAZING
08 91 00 METAL WALL LOUVERS

DIVISION 09 - FINISHES

09 22 00 SUPPORTS FOR PLASTER AND GYPSUM BOARD
09 24 23 STUCCO
09 29 00 GYPSUM BOARD
09 30 13 CERAMIC TILING
09 51 00 ACOUSTICAL CEILINGS
09 90 00 PAINTS AND COATINGS
09 97 13.15 LOW VOC POLYSULFIDE INTERIOR COATING OF WELDED STEEL PETROLEUM FUEL TANKS
09 97 13.27 EXTERIOR COATING OF STEEL STRUCTURES

DIVISION 10 - SPECIALTIES

10 14 00.20 INTERIOR SIGNAGE
10 21 13 TOILET COMPARTMENTS
10 28 13 TOILET ACCESSORIES
10 44 16 FIRE EXTINGUISHERS
10 51 13 METAL LOCKERS

DIVISION 12 - FURNISHINGS

12 24 13 ROLLER WINDOW SHADES
12 31 00 MANUFACTURED METAL CASEWORK
12 48 13 ENTRANCE FLOOR MATS AND FRAMES

DIVISION 13 - SPECIAL CONSTRUCTION

13 34 19 METAL BUILDING SYSTEMS

DIVISION 21 - FIRE SUPPRESSION

21 13 13.00 20 WET PIPE SPRINKLER SYSTEM, FIRE PROTECTION

DIVISION 22 - PLUMBING

22 00 00 PLUMBING, GENERAL PURPOSE
22 14 29.00 40 SUMP PUMPS

DIVISION 23 - HEATING, VENTILATING, AND AIR CONDITIONING (HVAC)

23 00 00 AIR SUPPLY, DISTRIBUTION, VENTILATION, AND EXHAUST SYSTEMS
23 03 00.00 20 BASIC MECHANICAL MATERIALS AND METHODS
23 07 00 THERMAL INSULATION FOR MECHANICAL SYSTEMS
23 08 00.00 10 COMMISSIONING OF HVAC SYSTEMS
23 23 00 REFRIGERANT PIPING
23 74 33.00 40 PACKAGED, OUTDOOR, HEATING AND COOLING MAKEUP AIR-CONDITIONERS
23 81 00.00 20 UNITARY AIR CONDITIONING EQUIPMENT

DIVISION 26 - ELECTRICAL

26 00 00.00 20 BASIC ELECTRICAL MATERIALS AND METHODS
26 08 00 APPARATUS INSPECTION AND TESTING
26 12 19.10 THREE-PHASE PAD-MOUNTED TRANSFORMERS
26 13 00 SF6/HIGH-FIREPOINT FLUIDS INSULATED PAD-MOUNTED SWITCHGEAR
26 20 00 INTERIOR DISTRIBUTION SYSTEM
26 24 13 SWITCHBOARDS
26 32 13.00 20 SINGLE OPERATION GENERATOR SETS
26 36 23.00 20 AUTOMATIC TRANSFER SWITCHES
26 41 00 LIGHTNING PROTECTION SYSTEM
26 42 14.00 10 CATHODIC PROTECTION SYSTEM (SACRIFICIAL ANODE)
26 51 00 INTERIOR LIGHTING
26 56 00 EXTERIOR LIGHTING

DIVISION 27 - COMMUNICATIONS

27 10 00 BUILDING TELECOMMUNICATIONS CABLING SYSTEM

DIVISION 28 - ELECTRONIC SAFETY AND SECURITY

28 31 63.00 20 ANALOG/ADDRESSABLE INTERIOR FIRE ALARM SYSTEM
28 31 76 INTERIOR FIRE ALARM AND MASS NOTIFICATION SYSTEM

DIVISION 31 - EARTHWORK

31 05 19 GEOTEXTILE
31 05 20 GEOSYNTHETIC DRAINAGE LAYER
31 23 00.00 20 EXCAVATION AND FILL
31 32 11 SOIL SURFACE EROSION CONTROL

DIVISION 32 - EXTERIOR IMPROVEMENTS

32 01 19 FIELD MOLDED SEALANTS FOR SEALING JOINTS IN RIGID PAVEMENTS
32 11 23 AGGREGATE BASE COURSE
32 12 21 BITUMINOUS ROAD-MIX SURFACE COURSE
32 17 23.00 20 PAVEMENT MARKINGS
32 31 13.53 HIGH-SECURITY CHAIN LINK FENCES AND GATES

DIVISION 33 - UTILITIES

33 08 53 AVIATION FUEL DISTRIBUTION SYSTEM START-UP
33 09 55 AVIATION FUEL PUMP CONTROL AND ANNUNCIATION SYSTEM (CUT-N-COVER TANKS)
33 11 00 WATER DISTRIBUTION
33 30 00 SANITARY SEWERS

33 40 00 STORM DRAINAGE UTILITIES
33 52 43.11 AVIATION FUEL MECHANICAL EQUIPMENT
33 52 43.13 AVIATION FUEL PIPING
33 52 43.14 AVIATION FUEL CONTROL VALVES
33 52 43.23 AVIATION FUEL PUMPS
33 52 43.28 FILTER SEPARATOR, AVIATION FUELING SYSTEM
33 52 80 LIQUID FUELS PIPELINE COATING SYSTEMS
33 52 90.00 20 WELDING FOR POL SERVICE PIPING
33 56 10 FACTORY-FABRICATED FUEL STORAGE TANKS
33 56 13.13 CUT AND COVER FUEL STORAGE TANKS
33 57 00 FUEL RECEIVING/DISPENSING EQUIPMENT
33 65 00 CLEANING PETROLEUM STORAGE TANKS
33 71 02 UNDERGROUND ELECTRICAL DISTRIBUTION

DIVISION 46 - WATER AND WASTEWATER EQUIPMENT

46 25 14 COALESCING OIL-WATER SEPARATORS

DIVISION 48 - ELECTRICAL POWER GENERATION

48 14 13.00 20 INTEGRAL COLLECTOR-STORAGE PASSIVE SOLAR WATER HEATER

-- End of Project Table of Contents --

DOCUMENT 00 01 15

LIST OF DRAWINGS
02/11

PART 1 GENERAL

1.1 SUMMARY

This section lists the drawings for the project pursuant to contract clause "DFARS 252.236-7001, Contract Drawings, Maps and Specifications."

1.2 CONTRACT DRAWINGS

Contract drawings are as follows:

DRAWING NO.	NAVFAC DWG NO.	TITLE
GENERAL		
G-001	-	COVER SHEET
G-002	-	INDEX OF DRAWINGS
G-003	-	SEQUENCE OF CONSTRUCTION, SCHEDULE AND GENERAL NOTES
G-004	-	OVERALL SITE PLAN - EXISTING
G-005	-	OVERALL SITE PLAN - PROPOSED
LIFE SAFETY		
LS001	-	LIFE SAFETY GENERAL NOTES
LS101	-	PUMP BUILDING LIFE SAFETY PLAN
LS102	-	FILTER BUILDING LIFE SAFETY PLAN
LS103	-	OPS BUILDING LIFE SAFETY PLAN
CIVIL		
C-001	-	ABBREVIATIONS, LEGEND AND NOTES
C-002	-	OVERALL SITE PLAN
C-003	-	CIVIL OVERALL ALIGNMENT PLAN
C-004	-	ALIGNMENT DATA PLAN
C-005	-	ALIGNMENT DATA PLAN
C-006	-	CONTROL POINTS
CD101	-	DEMOLITION SITE PLAN
C-102	-	SITE PLAN
C-103	-	LAYOUT PLAN
C-104	-	LAYOUT PLAN
C-105	-	LAYOUT PLAN
C-106	-	LAYOUT PLAN
C-107	-	UTILITY PLAN
C-108	-	UTILITY PLAN
C-109	-	UTILITY PLAN
C-110	-	UTILITY PLAN
C-111	-	DRAINAGE PLAN
C-112	-	DRAINAGE PLAN
C-113	-	DRAINAGE PLAN
C-114	-	DRAINAGE PLAN
C-115	-	GRADING PLAN
C-116	-	GRADING PLAN
C-117	-	GRADING PLAN
C-118	-	GRADING PLAN
C-201	-	DRAINAGE PROFILE
C-202	-	DRAINAGE & UTILITY PROFILE

C-203	-	UTILITY & ROADWAY PROFILE
C-204	-	ROADWAY PROFILE
C-401	-	EROSION AND SEDIMENT CONTROL
C-501	-	CIVIL DETAILS
C-502	-	CIVIL DETAILS
C-503	-	FENCE DETAILS
C-504	-	FENCE DETAILS
C-505	-	FENCE DETAILS
C-506	-	MISCELLANEOUS DETAILS
C-507	-	EROSION CONTROL DETAILS
BORING LOGS		
B-001	-	BORING LOGS
STRUCTURAL		
S-001	-	ABBREVIATIONS, LEGEND AND NOTES
S-101	-	TANK SITE PLAN & SECTIONS
S-401	-	TANK FLOOR SLAB REINFORCING PLAN
S-402	-	TANK FLOOR PLATE & UNDERDRAIN PLAN
S-403	-	TANK ROOF SLAB PLAN
S-404	-	TANK ROOF SLAB REINFORCING PLAN
S-405	-	TANK ROOF STIFFENED STEEL PLATE PLAN
S-406	-	TANK ROOF SHORING PLAN
S-407	-	PUMPHOUSE FLOOR PLAN
S-408	-	PUMPHOUSE ROOF PLAN
S-409	-	TANK CONCRETE CAP PLAN & SECTIONS
S-410	-	OPERATIONS BUILDING FOUNDATION PLAN & SECTIONS
S-411	-	OPERATIONS BUILDING ROOF PLAN & SECTIONS
S-412	-	FILTER BUILDING FOUNDATION PLAN & SECTIONS
S-413	-	FILTER BUILDING ROOF PLAN & SECTIONS
S-414	-	FILTER BUILDING PIPE SUPPORT PLAN
S-415	-	TRUCK PARKING PLAN & SECTIONS
S-416	-	TRUCK LOADING PLAN
S-417	-	TRUCK LOADING FOUNDATION PLAN & SECTIONS
S-418	-	TRUCK LOADING SPILL CONTAINMENT STRUCTURE PLAN & DETAILS
S-419	-	TRUCK LOADING CANOPY PLAN
S-420	-	PRODUCT RECOVERY TANK AND DETAILS
S-501	-	TANK WALL SECTIONS & DETAILS
S-502	-	TANK DETAILS
S-503	-	TANK DETAILS
S-504	-	TANK DETAILS
S-505	-	CONCRETE TANK STAIR SECTION & DETAILS
S-506	-	PUMPHOUSE STAIRS & DETAILS
S-507	-	OPERATIONS BUILDING REINFORCING ELEVATIONS
S-508	-	PIPE SUPPORTS
S-509	-	PIPE SUPPORTS
S-510	-	SPILLWAY PIPE CROSSING PLAN AND SECTIONS
S-511	-	ROLLING COVER DETAILS
S-512	-	ROLLING COVER DETAILS
S-513	-	ROLLING COVER DETAILS
S-514	-	PIPE CROSSOVERS PLAN AND SECTIONS
ARCHITECTURAL		
A-001	-	ABBREVIATIONS, LEGEND AND NOTES
A-101	-	PUMPHOUSE FLOOR PLAN
A-102	-	PUMPHOUSE ROOF PLAN
A-103	-	FILTER BUILDING FLOOR PLAN
A-104	-	FILTER BUILDING ROOF & REFLECTED CEILING PLANS

A-105	-	OPERATIONS BUILDING FLOOR PLAN
A-106	-	OPERATIONS BUILDING ROOF PLAN
A-107	-	OPERATIONS BUILDING REFLECTED CEILING PLAN
A-108	-	OPERATIONS BUILDING ENLARGED PLAN
A-109	-	OPERATIONS BUILDING FURNISHINGS AND EQUIPMENT PLAN
A-201	-	PUMPHOUSE ELEVATIONS
A-202	-	FILTER BUILDING ELEVATIONS
A-203	-	FILTER BUILDING ELEVATIONS
A-204	-	OPERATIONS BUILDING ELEVATIONS
A-301	-	PUMPHOUSE SECTIONS
A-302	-	FILTER BUILDING SECTIONS
A-303	-	OPERATIONS BUILDING SECTIONS
A-501	-	OPERATIONS BUILDING CASEWORK DETAILS
A-503	-	DETAILS
A-502	-	DOOR DETAILS
A-601	-	BUILDING SCHEDULES
A-602	-	BUILDING SCHEDULES
FIRE PROTECTION		
FA001	-	FIRE ALARM GENERAL NOTES
FA101	-	PUMP BUILDING FIRE ALARM PLAN
FA102	-	FILTER BUILDING FIRE ALARM PLAN
FA103	-	OPS BUILDING FIRE ALARM PLAN
FA501	-	FIRE ALARM DETAILS
FA502	-	FIRE ALARM DETAILS
FP001	-	FIRE PROTECTION GENERAL NOTES
FP101	-	FILTER BUILDING FIRE PROTECTION PLAN
FP102	-	OPS BUILDING FIRE PROTECTION PLAN
PLUMBING		
P-401	-	FILTER BUILDING PLUMBING
P-402	-	OPERATIONS BUILDING PLUMBING
P-501	-	OPERATIONS BUILDING ISOMETRICS
P-502	-	PLUMBING DETAILS
MECHANICAL		
M-001	-	ABBREVIATIONS, LEGEND AND NOTES
M-002	-	OVERALL FLOW DIAGRAM
M-003	-	FLOW DIAGRAM
M-101	-	OVERALL SITE PLAN
MD-102	-	DEMOLITION SITE PLAN
M-103	-	MECHANICAL SITE PLAN
M-104	-	PARTIAL SITE PLAN
M-105	-	PARTIAL SITE PLAN
M-401	-	PUMPHOUSE PIPING
M-402	-	PUMPHOUSE PIPING SECTIONS
M-403	-	FILTER BUILDING PIPING
M-404	-	FILTER BUILDING PIPING SECTIONS
M-405	-	REFUELER TRUCK LOADING PLAN
M-406	-	PRODUCT RECOVERY TANK
M-407	-	PUMPHOUSE AREA PIPING PLAN
M-408	-	PIPING CONNECTIONS
M-409	-	FILTER BLDG & PUMP HOUSE HVAC PLAN AND DETAILS
M-410	-	OPERATIONS BUILDING HVAC PLAN AND DETAILS
M-501	-	DITCH AND ROAD CROSSING DETAILS
M-502	-	OPERATING TANK DETAILS
M-503	-	PIPING DETAILS
M-504	-	MISCELLANEOUS DETAILS
M-505	-	MISCELLANEOUS DETAILS
M-506	-	PIPE SUPPORT DETAILS

M-507	-	HVAC SCHEDULES AND DETAILS
M-601	-	SEQUENCE OF OPERATION
M-602	-	SCHEDULES
MECHANICAL INSTRUMENTATION		
MI001	-	ABBREVIATIONS, LEGEND AND NOTES
MI601	-	FLOW DIAGRAM
MI602	-	FLOW DIAGRAM
MI603	-	FLOW DIAGRAM
MI604	-	FUEL FARM FLOW DIAGRAM
MI605	-	PUMP CONTROL PANEL ELEVATION
MI606	-	CONTROL SYSTEM DIAGRAMS
ELECTRICAL		
E-001	-	ABBREVIATIONS, LEGEND AND NOTES
E-101	-	KEY PLAN
E-102	-	PARTIAL SITE PLAN
E-103	-	PARTIAL SITE PLAN
E-104	-	PARTIAL SITE PLAN
E-401	-	PUMPHOUSE PLANS
E-402	-	PUMPHOUSE POWER PLAN
E-403	-	PUMPHOUSE CONTROL PLAN
E-404	-	FILTER BLDG LIGHTING PLAN
E-405	-	FILTER BLDG GROUNDING PLAN
E-406	-	FILTER BLDG POWER PLAN
E-407	-	OPS BUILDING LIGHTING PLAN
E-408	-	OPS BUILDING GROUNDING PLAN
E-409	-	OPS BUILDING POWER PLAN
E-410	-	TANKS NO 5 AND NO 6 GROUNDING PLAN
E-411	-	REFUELER TRUCK LOADING PLAN
E-501	-	ELECTRICAL DETAILS
E-502	-	ELECTRICAL DETAILS
E-601	-	WIRING DIAGRAMS
E-602	-	MOTOR CONTROL CIRCUIT WIRING DIAGRAMS
E-603	-	MOTOR CONTROL CIRCUIT WIRING DIAGRAMS
E-604	-	SCHEDULES
E-605	-	MCC & SWITCHBOARD SCHED & ELEVATIONS
E-606	-	CONTROL SCHEDULES
E-607	-	CONTROL SCHEDULES
E-701	-	PLATE DETAILS
E-702	-	PLATE DETAILS
E-703	-	PLATE DETAILS
E-704	-	HAZARDOUS AREA PLAN
E-705	-	HAZARDOUS AREA PLANS
E-706	-	TANKS 5 AND 6 HAZARDOUS AREAS
E-707	-	TRUCK LOADING AND PRT HAZARDOUS LOCATION
CATHODIC PROTECTION		
EK-101	-	CP PLAN
EK501	-	CP DETAILS
EK502	-	CP DETAILS

-- End of Document --

SECTION 00 73 04

SUPPLEMENTARY CONDITIONS FOR PROJECTS IN DJIBOUTI AREA
04/12

PART 1 GENERAL

1.1 SUBMITTALS

Government approval is required for submittals with a "G" designation; submittals not having a "G" designation are for Contractor Quality Control approval. The following shall be submitted in accordance with Section 01 33 00 SUBMITTAL PROCEDURES:

SD-01 Preconstruction Submittals

Contractor Employee Base Access Pass; G

Escort; G

1.2 PUBLIC RELEASE OF INFORMATION

1.2.1 Prohibition

There shall be no public release of information or photographs concerning any aspect of the materials or services relating to this bid, contract, or purchase order or other documents resulting therefrom without the prior written approval of the Contracting Officer.

1.2.2 Subcontracts and Purchase Orders

The Contractor agrees to insert the substance of above paragraph "Prohibition" in each subcontract and purchase order generated for this contract.

1.3 ENGLISH SPEAKING REPRESENTATIVE

At all times when any performance of the work at the site is being conducted by any employee of the Contractor or his subcontractors, the Contractor shall have a representative present on the site who is capable of explaining the work operations and receiving instructions in the English language. The Contracting Officer shall have the right to determine without appeal of such decision, whether the proposed representative has sufficient technical and English language capabilities and the Contractor shall immediately replace any individual not acceptable to the Contracting Officer. The Construction Contractor's qualified Project Manager, on-site Superintendent, Quality Control Manager, and Quality Control Specialist shall be fluent (can read, speak, and write) in the English language.

1.4 NORMS AND LAWS

In case of differences between project specifications or the accompanying drawings and referenced norms and laws, norms and laws shall govern. In case of differences between project specifications and the accompanying drawings, the specifications shall govern.

1.5 INDUSTRY STANDARDS

When both U.S. and European, or local, Industry Standards are applicable to this project and the standards are in conflict with each other, the most stringent of the industry shall govern.

1.6 PROHIBITED ITEMS

Use of the following items in this construction project is prohibited:

a. Use of aluminum for electrical conductors.

b. Use of embedded aluminum conduit in concrete.

c. Use of fluorescent light ballasts and other products containing PCB's.

d. Use of urea-formaldehyde foam insulation products.

e. Use of any paint/coatings having a lead content of over 0.06 percent by weight of non-volatile content. The use of ozone depleting chemicals is prohibited. The use of zinc-chromate is prohibited.

f. The use of materials containing asbestos is prohibited.

1.7 PROPRIETARY NAMES

Manufactures proprietary names indicated for colors, textures and patterns of materials are for the purpose of color, texture and pattern selection only. Other manufacturers materials are acceptable and provided they closely approximate colors, textures and patterns indicated and provided they conform to all other requirements subject to Contracting Officer's approval.

1.8 SUBMITTAL OF PROOF OF QUALIFICATIONS AND EXPERIENCE

Where qualifications or experience requirements are set forth in the specifications with respect to equipment and equipment installers, written proof of such qualifications or experience must be provided within thirty (30) calendar days after Contract award, and before placing any order for such equipment or before dispatching equipment installers to the project site.

1.9 ORAL MODIFICATION

No oral statement of any person other than the Contracting Officer as provided in the clause in this Contract entitled FAR 52.243-4 "Changes" (AUG 1987), shall in any manner or degree modify or otherwise affect the terms of this Contract.

1.10 NO WAIVER BY GOVERNMENT

The failure of the Government, in any one or more instances, to insist upon the strict performance of any of the terms of this Contract or to exercise any option herein conferred shall not be construed as a waiver or relinquishment to any extent of the right to assert or rely upon such terms or option on any future occasion.

1.11 PRODUCTS SPECIFIED USING USA STANDARDS

1.11.1 Local Products Specified Using United States of America (USA) Standards

There are locally available products specified in this contract that meet USA standards. "Locally available products that meet USA standards" are defined as:

a. "Products that meet the referenced USA standards, and are manufactured and distributed in-country, or manufactured and distributed in the European Union, and are readily available locally from in-country sources or from the European Union sources"; or

b. "Products manufactured in the USA and distributed in-country or in the European Union or in the USA, and are readily available locally from in-country sources or from the European Union sources, or from USA sources.".

1.11.2 USA Manufactured Products Specified Using USA Standards

There are products to be provided in this contract that are not readily available locally and must be manufactured in the United States of America (USA) and in compliance with USA standards. Products manufactured in another country are considered USA manufactured, if the manufacturers or suppliers are under license by USA manufacturers and the products meet the same applicable specifications and standards.

1.11.3 Consignment, Marking, and Customs Clearance

In order for the Contractor to be exempt from paying duty on material or equipment to be imported for incorporation into the contract work, all shipments shall be consigned to the Facilities Engineering and Acquisition Department (FEAD) and marked for the contract by contract number. Additionally, the Contractor shall supply to the FEAD with certified copies of the confirmed material/equipment orders and invoices in order that the duty free customs clearance may be accomplished. Failure on the part of the Contractor to comply with the requirements herein will not be grounds for non-enforcement of the provisions of the Clause, "Taxes" of the Contract Clauses.

1.11.4 Excess

The Contractor shall furnish to the Contracting Officer, just prior to completion of this contract, a consolidated inventory of all excess supplies, materials, and equipment imported duty free for use under this contract. The Contract shall either pay required duties on the excesses or re-export the excesses.

1.12 SECURITY REQUIREMENTS

The Contractor shall be responsible for furnishing each employee with, and for requiring that each employee engaged in the project, display such identification as may be approved and directed by the Contracting Officer.

Every employee of the prime contractor, all subcontractor employees, and all material suppliers' employees, who require access to the base for any reason and for any length of time will be required to obtain a base access

pass.

1.12.1 Contractor Employee Base Access Pass:

The Contractor shall be responsible for furnishing to each person requiring base access, employed in connection with this contract or any subcontract hereunder, a valid/current Contractor Employee Base Access Pass (identification badge). All prescribed identification shall be immediately delivered and/or surrendered to the Contracting Officer for cancellation upon: (1) termination or release of any employee; (2) termination or completion of contract.

1.12.2 Responsibility for Physical Security

The Contractor shall be responsible for physical security of all construction materials, supplies, and equipment of every description (including property which may be Government furnished or owned) provided and/or utilized in the execution of this contract.

1.12.3 Access to Operational Areas

Contractor personnel are expressly prohibited and shall be restricted from entering operational buildings or areas without the specific authorization of the Contracting Officer. To perform work, where "security escorts" are required for access to a facility, the Contractor shall coordinate with the Contracting Officer for access to such facilities.

1.12.4 Employment

Should the continued employment of any person in connection with this contract, or any subcontract thereunder, be deemed by the Contracting Officer to be prejudicial to the interests of the Government, that person shall immediately be removed from the work. In this connection the Contractor agrees that:

a. Cases which may involve disciplinary action against such persons, or the necessity of reassignment or termination of their services, shall be investigated, processed, reported and disposed of, as directed by the Contracting Officer.

b. Employment contracts of all persons employed in connection with this contract, or any subcontract thereunder shall include clauses containing the substance of this clause.

1.12.5 Compliance

Compliance with the foregoing provisions of these security requirements by subcontractors shall be the responsibility of the Contractor.

1.12.6 Escort with Advanced Notice for Day and Number of Trips

Escorts will be provided by the Contractor and must have Unescorted Visitor badges. For access at the Entry Control Point (ECP), the Contractor shall provide the following at the Preconstruction Meeting:

a. The Contractor is to provide an "Escort Plan" to the Contracting Officer at the Preconstruction Meeting and provide updated plan at least 15 calendars days prior to escort need.

b. Escort plan shall at a minimum contain the number of escorts per day and duration required.

c. Site Access: Vehicles shall proceed to the site from the main gate as directed by the Contracting Officer. The Contractor shall provide an escort with an Unescorted Visitor badge if the driver does not possess one.

1.13 GOVERNMENT FURNISHED SUPPLIES AND SERVICES

The Government will assign a Contracting Officer located at the Camp as point of contact and to administer this contract. Public Works Officer (PWO)/Facilities Engineering and Acquisition Department (FEAD) Djibouti, located at the Camp, will assign a Construction Manager (CM) to oversee the performance of this contract. The term "Contractor" means the prime contractor and all subcontractors at all tiers responsible for work associated with this contract. The term "contractor personnel" means employees of the prime contractor and employees of the subcontractors at all tiers responsible for work associated with this contract. The term "Camp" means Camp Lemonnier, Republic of Djibouti, Africa.

The Contractor shall coordinate with the CM for all required government-furnished supplies and services, including resources available through interservice support or provided to the government under other contracts. The Contractor shall furnish all vehicles and equipment required to complete the work included in this contract. The Contractor is responsible for all costs associated with vehicles and construction equipment. The Contractor will not be permitted to purchase fuel for vehicles and construction equipment from the Camp. The Government will furnish the property, supplies and services listed below to the Contractor.

a. Assistance in timely processing of identification badges and passes for contractor personnel. For identification badge requirements, refer to Section 01 14 00

b. Copies of all relevant orders, directives, and instructions issued by the Combatant Commander relating to force protection, security, health, safety.

c. Use of military postal system, if authorized by U.S. military postal directives and regulations, by contractor personnel (except Djibouti nationals).

d. Food service for contractor personnel will not be provided at the Camp.

e. Access to religious services provided by military chaplains.

f. Use of Camp Lemonnier base services will be available to contractor personnel (except Djibouti nationals) in accordance with camp policy.

g. Arrange right-of-entry and/or easement to worksites, facilities, and areas necessary for the contractor to execute work.

h. Provide documents to verify the status of Contractor (except Djiboutian contractors) and contractor personnel (except Djiboutian nationals) as under contract with the U.S. Government to facilitate entry at the airport under the US-Djibouti Access Agreement, Article V, a copy of which is located at the end of this section.

i. Provide documents as necessary to confirm exemption from taxes, duties, license for equipment, supplies, materials, or services imported into or exported out of the Republic of Djibouti by the Contractor (except Djiboutian contractors and their employees) in accordance with the US-Djibouti Access Agreement, Article X, a copy of which is included at the end of this section. Assist the Contractor with Customs clearance through the Republic of Djibouti.

j. Treated effluent water from the wastewater treatment plant will be available to the Contractor for use for dust control. The treated effluent water is available for contractor pick up at the 125.000 gallon effluent storage tank located adjacent to the truck fueling station per availability and per Camp Lemonnier's water distribution plan. The Contractor shall provide all personnel, vehicles, pumps, spreaders and other equipment required to obtain and apply the treated water.

k. Construction Offices and Laydown Area: The Government will not provide a separate area within the fenced area of the Camp for construction operations and laydown. The Contractor may utilize the approved construction site for this purpose or the Contractor may obtain additional areas off Camp. The Contractor shall provide fencing and security as required to secure all laydown areas outside the fenced limits of the Camp.

l. Gasoline and diesel fuels, required for the completion of this construction contract, will not be available for purchase by the Contractor on the Camp.

The government will not provide an area on the Camp for berthing of contractor personnel. The Contractor is responsible for all costs and arrangements associated with the required berthing of contractor personnel outside of the Camp.

1.14 CONTRACTOR RESPONSIBILITY FOR CONTRACTOR'S PERSONNEL

The Contractor (except Djiboutian contractors) and contractor personnel (except Djiboutian nationals) shall adhere to the provisions of Article V, US-Djibouti Access Agreement.

The Contractor will be required to coordinate with the State Department and/or Embassy in order to provide personnel clearances , either theatre or country, for travel of contractor personnel (except Djiboutian nationals) to Djibouti.

The Contractor is responsible for providing their own security for contractor personnel (except Djiboutian nationals), property and materials while on and off the Camp, as well as securing worksites, laydown areas, berthing areas and other locations necessary for the performance of this contract. The contractor shall follow all applicable orders and instructions from U.S. military officials in regard to force protection and security.

PART 2 PRODUCTS

Not Used

PART 3 EXECUTION

Not Used

-- End of Document --

THIS PAGE HAS BEEN INTENTIONALLY LEFT BLANK

SECTION 01 11 00

SUMMARY OF WORK
08/11

PART 1 GENERAL

1.1 REFERENCES

The publications listed below form a part of this specification to the extent referenced. The publications are referred to within the text by the basic designation only.

ASTM INTERNATIONAL (ASTM)

ASTM E2114	(2008) Standard Terminology for Sustainability Relative to the Performance of Buildings

1.2 DEFINITIONS

Definitions pertaining to sustainable development are as defined in ASTM E2114, Section 01 57 19.00 20 TEMPORARY ENVIRONMENTAL CONTROLS, and as specified.

a. "Environmentally preferable products" have a lesser or reduced effect on the environment in comparison to conventional products and services. This comparison may consider raw materials acquisition, production, manufacturing, packaging, distribution, reuse, operation, maintenance, or disposal of the product.

b. "Indoor environmental quality" is the physical characteristics of the building interior that impact occupants, including air quality, illumination, acoustics, occupant control, thermal comfort, daylighting, and views.

c. "Operational performance" is the functional behavior of the building as a whole or of the building components.

d. "Sustainability" is the balance of environmental, economic, and societal considerations.

1.3 SUBMITTALS

Government approval is required for submittals with a "G" designation; submittals not having a "G" designation are for Contractor Quality Control approval. An "S" following a submittal item indicates that the submittal is required for the Sustainability Notebook to fulfill federally mandated sustainable requirements in accordance with 01 33 29 SUSTAINABILITY REPORTING. Submit the following in accordance with Section 01 33 00 SUBMITTAL PROCEDURES:

SD-01 Preconstruction Submittals

Upon receipt of Government Furnished Equipment, the Contractor shall submit records in accordance with paragraph entitled, "Government Furnished Property," of this section.

Submit the following items to the Contracting Officer:

Utility Outage Requests
Utility Connection Requests
Borrow Permits
Excavation Permits
Welding Permits

1.4 WORK COVERED BY CONTRACT DOCUMENTS

1.4.1 Project Description

The work includes, but is not limited to, the items listed below:

a. Provide two 15,000 BL aviation fuel cut and cover operating tanks.

b. Provide two 76 L/s pumphouses.

c. Provide one filter building.

d. Provide two truck loading stations.

e. Provide refueler truck parking for 12 vehicles.

f. Provide a POL operations building.

g. Provide an emergency generator and related equipment.

1.4.2 Location

The work shall be located at the Camp Lemonnier, Republic of Djibouti, Africa, approximately as indicated. The exact location will be shown by the Contracting Officer.

1.5 PROJECT ENVIRONMENTAL GOALS

Contractor shall distribute copies of the Environmental Goals to each subcontractor and the Contracting Officer. The overall goal for design, construction, and operation is to produce a building that meets the functional program needs and incorporates the principles of sustainability. Specifically:

a. Preserve and restore the site ecosystem and biodiversity; avoid site degradation and erosion. Minimize offsite environmental impact.

b. Use the minimum amount of energy, water, and materials feasible to meet the design intent. Select energy and water efficient equipment and strategies.

c. Use environmentally preferable products and decrease toxicity level of materials used.

d. Use renewable energy and material resources.

e. Optimize operational performance (through commissioning efforts) in order to ensure energy efficient equipment operates as intended. Consider the durability, maintainability, and flexibility of building systems.

f. Manage construction site and storage of materials to ensure no negative impact on the indoor environmental quality of the building.

g. Reduce construction waste through reuse, recycling, and supplier take-back.

1.6 OCCUPANCY OF PREMISES

Building(s) will be occupied during performance of work under this Contract. Occupancy notifications will be posted in a prominent location in the work area.

Before work is started, the Contractor shall arrange with the Contracting Officer a sequence of procedure, means of access, space for storage of materials and equipment, and use of approaches, corridors, and stairways.

1.7 EXISTING WORK

In addition to "FAR 52.236-9, Protection of Existing Vegetation, Structures, Equipment, Utilities, and Improvements":

a. Remove or alter existing work in such a manner as to prevent injury or damage to any portions of the existing work which remain.

b. Repair or replace portions of existing work which have been altered during construction operations to match existing or adjoining work, as approved by the Contracting Officer. At the completion of operations, existing work shall be in a condition equal to or better than that which existed before new work started.

1.8 ON-SITE PERMITS

1.8.1 Utility Outage Requests and Utility Connection Requests

Notify the Contracting Officer at least 72 hours prior to starting excavation work. Contractor is responsible for marking and verifying all utilities not marked.

The Contractor shall verify the elevations of existing piping, utilities, and any type of underground obstruction not indicated or specified to be removed. But indicated in locations to be transversed by piping, ducts, and other work to be installed. Verify elevations before installing new work closer than nearest manhole or other structure at which an adjustment in grade can be made.

Work shall be scheduled to hold outages to a minimum.

Utility outages and connections required during the prosecution of work that affect existing systems shall be arranged for at the convenience of the Government and shall be scheduled outside the regular working hours or on weekends.

Contracting Officer may permit utility outages at his discretion.

Contractor shall not be entitled to additional payment for utility outages and connections required to be performed outside the regular work hours.

Requests for utility outages and connections shall be made in writing to

the Contracting Officer at least 30 calendar days in advance of the time required. Each request shall state the system involved, area involved, approximate duration of outage, and the nature of work involved.

1.8.2 Borrow Permits, Excavation Permits,and Welding Permits

Permits shall be posted at a conspicuous location in the construction area.

Burning of trash or rubbish is not permitted at Camp Lemonnier.

1.9 LOCATION OF UNDERGROUND UTILITIES

Obtain digging permits prior to start of excavation by contacting the Contracting Officer 15 calendar days in advance. Scan the construction site with electromagnetic or sonic equipment, and mark the surface of the ground or paved surface where existing underground utilities are discovered. Verify the elevations of existing piping, utilities,and any type of underground obstruction not indicated to be specified or removed but indicated or discovered during scanning in locations to be traversed by piping, ducts, and other work to be conducted or installed. Verify elevations before installing new work closer than nearest manhole or other structure at which an adjustment in grade can be made.

1.9.1 Notification Prior to Excavation

Notify the Contracting Officer at least 48 hours prior to starting excavation work.

1.10 SALVAGE MATERIAL AND EQUIPMENT

Items designated by the Contracting Officer to be salvaged shall remain the property of the Government.

The salvaged property shall be segregated, itemized, delivered, and off-loaded at the Government designated storage area located within 8 kilometers of the construction site.

Contractor shall maintain property control records for material or equipment designated as salvage. Contractor's system of property control may be used if approved by the Contracting Officer. Contractor shall be responsible for storage and protection of salvaged materials and equipment until disposition by the Contracting Officer.

PART 2 PRODUCTS

Not used.

PART 3 EXECUTION

Not used.

-- End of Section --

SECTION 01 14 00

WORK RESTRICTIONS
11/11

PART 1 GENERAL

1.1 SUBMITTALS

Government approval is required for submittals with a "G" designation; submittals not having a "G" designation are for Contractor Quality Control approval. Submittals with an "S" are for inclusion in the Sustainability Notebook, in conformance to Section 01 33 29 SUSTAINABILITY REPORTING. Submit the following in accordance with Section 01 33 00 SUBMITTAL PROCEDURES:

SD-01 Preconstruction Submittals

List of Contact Personnel; G

Personnel List; G

Vehicle List; G

1.2 SPECIAL SCHEDULING REQUIREMENTS

a. The Fuel Farm and Airfield will remain in operation during the entire construction period. The Contractor must conduct his operations so as to cause the least possible interference with normal operations of the activity.

d. Permission to interrupt any Activity roads, railroads, and/or utility service must be requested in writing a minimum of 15 calendar days prior to the desired date of interruption.

e. The work under this contract requires special attention to the scheduling and conduct of the work in connection with existing operations. Identify on the construction schedule each factor which constitutes a potential interruption to operations.

1.3 CONTRACTOR ACCESS AND USE OF PREMISES

1.3.1 Activity Regulations

Ensure that Contractor personnel employed on the Activity become familiar with and obey Activity regulations including safety, fire, traffic and security regulations. Keep within the limits of the work and avenues of ingress and egress. Wear hard hats in designated areas. Do not enter any restricted areas unless required to do so and until cleared for such entry. Mark Contractor equipment for identification.

1.3.1.1 Subcontractors and Personnel Contacts

Provide a list of contact personnel of the Contractor and subcontractors including addresses and telephone numbers for use in the event of an emergency. As changes occur and additional information becomes available, correct and change the information contained in previous lists.

1.3.1.2 Identification Badges and Installation Access

Application for and use of badges will be as directed. Obtain access to the installation by participating in the Navy Commercial Access Control System (NCACS), or by obtaining passes each day from the Base Pass and Identification Office. Costs for obtaining passes through the NCACS are the responsibility of the Contractor. One-day passes, issued through the Base Pass and Identification Office, will be furnished without charge. Furnish a completed EMPLOYMENT ELIGIBILITY VERIFICATION (DHS FORM I-9) form for all personnel requesting badges. This form is available at http://www.uscis.gov/portal/site/uscis by searching or selecting Employment Verification (Form I-9). Immediately report instances of lost or stolen badges to the Contracting Officer.

a. NCACS Program: NCACS is a voluntary program in which Contractor personnel who enroll, and are approved, are subsequently granted access to the installation for a period up to one year, or the length of the contract, whichever is less, and are not required to obtain a new pass from the Base Pass and Identification Office for each visit. The Government performs background screening and credentialing. Throughout the year the Contractor employee must continue to meet background screening standards. Periodic background screenings are conducted to verify continued NCACS participation and installation access privileges. Under the NCACS program, no commercial vehicle inspection is required, other than for Random Anti-Terrorism Measures (RAM) or in the case of an elevation of Force Protection Conditions (FPCON). Information on costs and requirements to participate and enroll in NCACS is available at http://www.rapidgate.com or by calling 1-877-727-4342. Contractors should be aware that the costs incurred to obtain NCACS credentials, or costs related to any means of access to a Navy Installation, are not reimbursable. Any time invested, or price(s) paid, for obtaining NCACS credentials will not be compensated in any way or approved as a direct cost of any contract with the Department of the Navy.

b. One-Day Passes: Participation in the NCACS is not mandatory, and if the Contractor chooses to not participate, the Contractor's personnel will have to obtain daily passes, be subject to daily mandatory vehicle inspection, and will have limited access to the installation. The Government will not be responsible for any cost or lost time associated with obtaining daily passes or added vehicle inspections incurred by non-participants in the NCACS.

1.3.1.3 No Smoking Policy

Smoking is prohibited within and outside of all buildings on installation, except in designated smoking areas. This applies to existing buildings, buildings under construction and buildings under renovation. Discarding tobacco materials other than into designated tobacco receptacles is considered littering and is subject to fines. The Contracting Officer will identify designated smoking areas.

1.3.2 Working Hours

Regular working hours must consist of a 12 hour period established by the Contractor Officer, between 6 a.m. and 6:00 p.m., Saturday through Thursday, excluding Government holidays.

1.3.3 Work Outside Regular Hours

Work outside regular working hours requires Contracting Officer approval. Make application 15 calendar days prior to such work to allow arrangements to be made by the Government for inspecting the work in progress, giving the specific dates, hours, location, type of work to be performed, contract number and project title. Based on the justification provided, the Contracting Officer may approve work outside regular hours. During periods of darkness, the different parts of the work must be lighted in a manner approved by the Contracting Officer. Make utility cutovers after normal working hours Fridays, and Government holidays unless directed otherwise.

1.3.4 Occupied and Existing Buildings

The Contractor shall be working around existing buildings which are occupied. Do not enter the buildings without prior approval of the Contracting Officer.

The existing buildings and their contents must be kept secure at all times. Provide temporary closures as required to maintain security as directed by the Contracting Officer.

1.3.5 Utility Cutovers and Interruptions

a. Make utility cutovers and interruptions after normal working hours or on Fridays, and Government holidays. Conform to procedures required in the paragraph "Work Outside Regular Hours."

b. Ensure that new utility lines are complete, except for the connection, before interrupting existing service.

c. Interruption to water, sanitary sewer, storm sewer, telephone service, electric service, air conditioning, heating, fire alarm, compressed air, and fuel systems are considered utility cutovers pursuant to the paragraph entitled "Work Outside Regular Hours."

d. Operation of Station Utilities: The Contractor must not operate nor disturb the setting of control devices in the station utilities system, including water, sewer, electrical, and steam services. The Government will operate the control devices as required for normal conduct of the work. The Contractor must notify the Contracting Officer giving reasonable advance notice when such operation is required.

1.4 SECURITY REQUIREMENTS

1.4.1 Personnel List

Submit for approval, at least 15 days prior to the desired date of entry, an original alphabetical list of personnel who require entry into Government property to perform work on the project. Furnish for each person:

a. Name

b. Date and place of birth

c. Citizenship

d. Home address

1.4.2 Vehicle List

Submit an original list of vehicles to be utilized at the work site with the following information for each vehicle:

a. Make

b. Year

c. Model

d. License number

e. Registered owner

1.4.3 Passes

Submit request for personnel and vehicle passes together. Include the Certificate of Insurance for Contractor and Subcontractor(s) and the Statement of Acknowledgement Form SF 1413 with the submittal. Passes will normally be issued within 21 days.

1.4.3.1 Control

Maintain strict accountability over passes. Immediately report to the source of issue, passes missing or lost and the circumstances. If the Contractor has another active contract or one commencing immediately, employees' names may be transferred from one contract to the other. Final payment will not be effected until employees are transferred to another contract or the records are cleared. Furnish a signed letter, countersigned by the source of issue, stating that passes have been turned in.

PART 2 PRODUCTS

Not Used

PART 3 EXECUTION

Not Used

-- End of Section --

SECTION 01 20 00.00 20

PRICE AND PAYMENT PROCEDURES
11/11

PART 1 GENERAL

1.1 REFERENCES

The publications listed below form a part of this specification to the extent referenced. The publications are referred to within the text by the basic designation only.

U.S. ARMY CORPS OF ENGINEERS (USACE)

EP-1110-1-8	(2009) Construction Equipment Ownership and Operating Expense Schedule

1.2 SUBMITTALS

Government approval is required for submittals with a "G" designation; submittals not having a "G" designation are for Contractor Quality Control approval.Submittals with an "S" are for inclusion in the Sustainability Notebook, in conformance to Section 01 33 29 SUSTAINABILITY REPORTING. Submit the following in accordance with Section 01 33 00 SUBMITTAL PROCEDURES:

SD-01 Preconstruction Submittals

Earned Value Report; G

1.3 EARNED VALUE REPORT

1.3.1 Data Required

This contract requires the use of a cost-loaded Network Analysis Schedule (NAS). The information required for the Schedule of Prices will be entered as an integral part of the Network Analysis Schedule. Within 15 calendar days of notice of award, prepare and deliver to the Contracting Officer an Earned Value Report (construction contract) as directed by the Contracting Officer. Provide a detailed breakdown of the contract price, giving quantities for each of the various kinds of work, unit prices, and extended prices. Costs shall be summarized and totals provided for each construction category.

1.3.2 Schedule Instructions

Payments will not be made until the Earned Value Report from the cost-loaded NAS has been submitted to and accepted by the Contracting Officer. Identify the cost for site work, and include incidental work to the 1.5 m line. Identify costs for the building(s), and include work out to the 1.5 m line. Work out to the 1.5 m line shall include construction encompassed within a theoretical line 1.5 m from the face of exterior walls and shall include attendant construction, such as pad mounted HVAC cooling equipment, cooling towers, and transformers placed beyond the 1.5 m line.

1.3.3 Real Property Assets

The Government will provide the Draft DD Form 1354, Transfer and Acceptance of Military Real Property filled in with the appropriate Real Property Unique Identifiers (RPUID) and related construction Category Codes to summarize the designed real property assets that apply to this contract. The Contractor shall meet with the Contracting Officer and the Real Property Accounting Officer during the Pre Construction Meeting and the Project Closeout Meetings to modify and include any necessary changes to the DD Form 1354. The Contractor shall provide the Interim DD Form 1354 that uses the appropriate division of the RPUIDs/ Category Codes to represent the final constructed facility and include all associated cost. Coordinate the Contractor's Price and Payment structure with the structure of the RPUIDs/ Category Codes.

Divide detailed asset breakdown into the RPUIDs and related construction Category Codes and populate associated costs which represent all aspects of the work. Where assets diverge into multiple RPUID/ Category Codes, divide the asset and provide the proportion of the assets in each RPUID/ Category Code. Assets and related RPUID/ Category Codes may be modified by the Contracting Officer as necessary during course of the work. Coordinate identification and proportion of these assets with the Government Real Property Accounting Officer.

Cost data accumulated under this section are required in the preparation of DD Form 1354.

1.3.4 Schedule Requirements for HVAC TAB

The field work shall be broken down in the Earned Value Report from the cost-loaded NAS by separate line items which reflect measurable deliverables. Specific payment percentages for each line item shall be determined on a case by case basis for each contract. The line items shall be as follows:

a. Approval of Design Review Report: The TABS Agency is required to conduct a review of the project plans and specifications to identify any feature, or the lack thereof, that would preclude successful testing and balancing of the project HVAC systems. The resulting findings shall be submitted to the Government to allow correction of the design. The progress payment shall be issued after review and approval of the report.

b. Approval of the pre-field engineering report: The TABS Agency submits a report which outlines the scope of field work. The report shall contain details of what systems will be tested, procedures to be used, sample report forms for reporting test results and a quality control checklist of work items that must be completed before TABS field work commences.

c. Season I field work: Incremental payments are issued as the TABS field work progresses. The TABS Agency mobilizes to the project site and executes the field work as outlined in the pre-field engineering report. The HVAC water and air systems are balanced and operational data shall be collected for one seasonal condition (either summer or winter depending on project timing).

d. Approval of Season I report: On completion of the Season I field work, the data is compiled into a report and submitted to the

Government. The report is reviewed, and approved, after ensuring compliance with the pre-field engineering report scope of work.

e. Completion of Season I field QA check: Contract QC and Government representatives meet the TABS Agency at the jobsite to retest portions of the systems reported in the Season I report. The purpose of these tests are to validate the accuracy and completeness of the previously submitted Season I report.

f. Approval of Season II report: The TABS Agency completes all Season II field work, which is normally comprised mainly of taking heat transfer temperature readings, in the season opposite of that under which Season I performance data was compiled. This data shall be compiled into a report and submitted to the Government. On completion of submittal review to ensure compliance with the pre-field engineering report scope, progress payment is issued. Progress payment is less than that issued for the Season I report since most of the water and air balancing work effort is completed under Season I.

1.4 CONTRACT MODIFICATIONS

In conjunction with the Contract Clause "DFARS 252.236-7000, Modification Proposals-Price Breakdown," and where actual ownership and operating costs of construction equipment cannot be determined from Contractor accounting records, equipment use rates shall be based upon the applicable provisions of the EP-1110-1-8.

1.5 CONTRACTOR'S INVOICE AND CONTRACT PERFORMANCE STATEMENT

1.5.1 Content of Invoice

Requests for payment will be processed in accordance with the Contract Clause FAR 52.232-27, Prompt Payment Construction Contracts and FAR 52.232-5, Payments Under Fixed-Price Construction Contracts. The requests for payment shall include the documents listed below.

a. The Contractor's invoice, on NAVFAC Form 7300/30 furnished by the Government, showing in summary form, the basis for arriving at the amount of the invoice. Form 7300/30 shall include certification by Quality Control (QC) Manager as required by the contract.

b. The Earned Value Report from the cost-loaded NAS, showing in detail: the estimated cost, percentage of completion, and value of completed performance for each of the construction categories stated in this contract. Use NAVFAC LANT Form 4-330/110 (New 7/84) on NAVFAC LANT contracts when a Monthly Estimate for Voucher is required.

c. Updated Project Schedule and reports required by the contract.

d. Contractor Safety Self Evaluation Checklist.

e. Other supporting documents as requested.

f. Updated copy of submittal register.

g. Invoices not completed in accordance with contract requirements will be returned to the Contractor for correction of the deficiencies.

h. Contractor's Monthly Estimate for Voucher (NAVFAC LANT Form 4-330/110

(New 7/84)) with Subcontractor and supplier payment certification.

i. Materials on Site.

1.5.2 Submission of Invoices

If NFAS Clause 5252.232-9301 is included in the contract, the documents listed in paragraph "CONTENT OF INVOICE" shall be provided in their entirety as attachments in Wide Area Work Flow (WAWF) for each invoice submitted. The maximum size of each WAWF attachment is two megabytes, but there are no limits on the number of attachments. If a document cannot be attached in WAWF due to system or size restriction it shall be provided as instructed by the Contracting Officer.

Monthly invoices and supporting forms for work performed through the anniversary award date of the contract shall be submitted to the Contracting Officer within 5 calendar days of the date of invoice. For example, contract award date is the 7th of the month, the date of each monthly invoice shall be the 7th and the invoice shall be submitted by the 12th of the month.

1.5.3 Final Invoice

a. A final invoice shall be accompanied by the certification required by DFARS 252.247.7023 TRANSPORTATION OF SUPPLIES BY SEA, and the Contractor's Final Release. If the Contractor is incorporated, the Final Release shall contain the corporate seal. An officer of the corporation shall sign and the corporate secretary shall certify the Final Release.

b. For final invoices being submitted via WAWF, the original Contractor's Final Release Form and required certification of Transportation of Supplies by Sea must be provided directly to the respective Contracting Officer prior to submission of the final invoice. Once receipt of the original Final Release Form and required certification of Transportation of Supplies by Sea has been confirmed by the Contracting Officer, the Contractor shall then submit final invoice and attach a copy of the Final Release Form and required certification of Transportation of Supplies by Sea in WAWF.

c. Final invoices not accompanied by the Contractor's Final Release and required certification of Transportation of Supplies by Sea will be considered incomplete and will be returned to the Contractor.

1.6 PAYMENTS TO THE CONTRACTOR

Payments will be made on submission of itemized requests by the Contractor which comply with the requirements of this section, and will be subject to reduction for overpayments or increase for underpayments made on previous payments to the Contractor.

1.6.1 Obligation of Government Payments

The obligation of the Government to make payments required under the provisions of this contract will, at the discretion of the Contracting Officer, be subject to reductions and/or suspensions permitted under the FAR and agency regulations including the following in accordance with "FAR 32.503-6:

a. Reasonable deductions due to defects in material or workmanship;

b. Claims which the Government may have against the Contractor under or in connection with this contract;

c. Unless otherwise adjusted, repayment to the Government upon demand for overpayments made to the Contractor; and

d. Failure to provide up to date record drawings not current as stated in Contract Clause "FAC 5252.236-9310, Record Drawings."

1.6.2 Payment for Onsite and Offsite Materials

Progress payments may be made to the contractor for materials delivered on the site, for materials stored off construction sites, or materials that are in transit to the construction sites under the following conditions:

a. FAR 52.232-5(b) Payments Under Fixed Price Construction Contracts.

b. Materials delivered on the site but not installed, including completed preparatory work, and off-site materials to be considered for progress payment shall be major high cost, long lead, special order, or specialty items, not susceptible to deterioration or physical damage in storage or in transit to the construction site. Examples of materials acceptable for payment consideration include, but are not limited to, structural steel, non-magnetic steel, non-magnetic aggregate, equipment, machinery, large pipe and fittings,precast/prestressed concrete products, plastic lumber (e.g., fender piles/curbs), and high-voltage electrical cable. Materials not acceptable for payment include consumable materials such as nails, fasteners, conduits, gypsum board, glass, insulation, and wall coverings.

c. Materials to be considered for progress payment prior to installation shall be specifically and separately identified in the Contractor's estimates of work submitted for the Contracting Officer's approval in accordance with Earned Value Report requirement of this contract. Requests for progress payment consideration for such items shall be supported by documents establishing their value and that the title requirements of the clause at FAR 52.232-5 have been met.

d. Materials are adequately insured and protected from theft and exposure.

e. Provide a written consent from the surety company with each payment request for offsite materials.

f. Materials to be considered for progress payments prior to installation shall be stored either in Hawaii, Guam, Puerto Rico, or the Continental United States. Other locations are subject to written approval by the Contracting Officer.

PART 2 PRODUCTS

Not Used

PART 3 EXECUTION

Not Used

-- End of Section --

SECTION 01 30 00

ADMINISTRATIVE REQUIREMENTS
11/11

PART 1 GENERAL

1.1 REFERENCES

The publications listed below form a part of this specification to the extent referenced. The publications are referred to within the text by the basic designation only.

U.S. NATIONAL ARCHIVES AND RECORDS ADMINISTRATION (NARA)

15 CFR 772	Definition of Terms
15 CFR 773	Special Licensing Procedures

1.2 SUBMITTALS

Government approval is required for submittals with a "G" designation; submittals not having a "G" designation are for Contractor Quality Control approval.Submittals with an "S" are for inclusion in the Sustainability Notebook, in conformance to Section 01 33 29 SUSTAINABILITY REPORTING. Submit the following in accordance with Section 01 33 00 SUBMITTAL PROCEDURES:

SD-01 Preconstruction Submittals

View location map; G

Progress and completion pictures; G

1.3 VIEW LOCATION MAP

Submit to the Contracting Officer, prior to or with the first digital photograph submittals, a sketch or drawing indicating the required photographic locations. Update as required if the locations are moved.

1.4 PROGRESS AND COMPLETION PICTURES

Photographically document site conditions prior to start of construction operations. Provide monthly, and within one month of the completion of work, digital photographs, 1600x1200x24 bit true color minimum resolution in JPEG file format showing the sequence and progress of work. Take a minimum of 20 digital photographs each week throughout the entire project from a minimum of ten views from points located by the Contracting Officer. Submit a view location sketch indicating points of view. Submit with the monthly invoice two sets of digital photographs each set on a separate CD-R, cumulative of all photos to date. Indicate photographs demonstrating environmental procedures. Photographs for each month shall be in a separate monthly directory and each file shall be named to indicate its location on the view location sketch. The view location sketch shall also be provided on the CD as digital file. All file names shall include a date designator. Cross reference submittals in the appropriate daily report. Photographs shall be provided for unrestricted use by the Government.

1.5 MINIMUM INSURANCE REQUIREMENTS

Procure and maintain during the entire period of performance under this contract the following minimum insurance coverage:

a. Comprehensive general liability: $500,000 per occurrence

b. Automobile liability: $200,000 per person, $500,000 per occurrence for bodily injury, $20,000 per occurrence for property damage

c. Workmen's compensation as required by Federal and State workers' compensation and occupational disease laws.

d. Employer's liability coverage of $100,000, except in States where workers compensation may not be written by private carriers,

1.6 CONTRACTOR SPECIAL REQUIREMENTS

1.6.1 Space Temperature Control, HVAC TAB, and Apparatus Inspection

All contract requirements of Section 26 08 00 APPARATUS INSPECTION AND TESTING shall be accomplished directly by a first tier subcontractor, including the Commissioning Agent. No work required by Section 26 08 00 shall be accomplished by a second tier subcontractor.

1.7 SUPERVISION

Have at least one qualified supervisor capable of reading, writing, and conversing fluently in the English language on the job site during working hours. In addition, if a Quality Control (QC) representative is required on the contract, then that individual shall also have fluent English communication skills.

1.8 PRECONSTRUCTION CONFERENCE

After award of the contract but prior to commencement of any work at the site, meet with the Contracting Officer to discuss and develop a mutual understanding relative to the administration of the value engineering and safety program, preparation of the schedule of prices or earned value report, shop drawings, and other submittals, scheduling programming, prosecution of the work, and clear expectations of the "Interim DD Form 1354" Submittal. Major subcontractors who will engage in the work shall also attend.

1.9 FACILITY TURNOVER PLANNING MEETINGS (NAVFAC Red Zone - NRZ)

Key personnel will meet to identify strategies to ensure the project is carried to expeditious closure and turnover to the Client. Start the turnover process at the Pre Construction Conference meeting and convene at the Facility Turnover Meetings once the project has reached approximately 75 percent completion or three to six months prior to Beneficial Occupancy Date (BOD), whichever comes first. The Contracting Officer's Representative will lead the meetings and guide discussions based on an agenda provided by the Government. The facility Turnover effort shall include the following:

a. Pre Construction Meeting - Contracting Officer's Technical Representative (COTR) will provide the NRZ Checklist and the Contractor, Client, and NAVFAC Representatives will compare

Contractor's schedule to NRZ Checklist items.

b. Facility Turnover Meetings

1. Fill in the NRZ Checklist including Contractor, Client, and NAVFAC Checklist Items and assign a person responsible for each item and a due date. The Contractor's Representative will facilitate the assignment of responsibilities, fill out the NRZ Checklist, and discuss "Interim DD Form 1354" requirements.

2. Review the Contractor's updated schedule. The Contractor shall develop a POAM for the completion of all Contractor, Client, and NAVFAC Checklist items.

3. Confirm that all NRZ Checklist items will be completed on time for the scheduled Facility Turnover.

1.10 EXPORT LICENSES FOR OVERSEAS PROJECTS

Obtain individual export licenses and project export licenses required by the Department of Commerce regulations (15 CFR 772 and 15 CFR 773) so that no delays are experienced in shipping from the United States of America to a foreign country. For additional information, the Contractor may contact one of the U.S. and Foreign Commercial Service District Offices of the Department of Commerce which are located in almost every State.

1.11 WAIVER FOR WORKER'S COMPENSATION

In addition to "FAR 52.228-4, Workers' Compensation and War Hazard Insurance Overseas," the Secretary of Labor has granted a waiver. The waiver does not apply to employees who are hired in the United States, or who are residents, or citizens of the United States.

1.12 PARTNERING

To most effectively accomplish this contract, the Government requires the formation of a cohesive partnership within the Project Team whose members are from the Government, the Contractor and their Subcontractors. Key personnel from the Supported Command, the End User (who will occupy the facility), NAVFAC (Echelon III and IV), the Navy Region/Installation, the Contractor and Subcontractors, and the Designer of Record will be invited to participate in the Partnering process. The Partnership will draw on the strength of each organization in an effort to achieve a project that is without any safety mishaps, conforms to the Contract, and stays within budget and on schedule.

The Contracting Officer will provide Information on the Partnering Process and a list of key and optional personnel who should attend the Partnering meeting.

1.12.1 Formal Partnering

Provide and host the Partnering sessions with key personnel of the Project Team, including Contractor personnel and Government personnel. Pay all costs associated with the Partnering effort including the Facilitator, the meeting room, and other incidental items. In exception, participants shall bear their own costs for meals, lodging, and transportation associated with the Partnering sessions.

Before a Partnering session, coordinate with the Facilitator all requirements for incidental items (such as audio-visual equipment, easels, flipchart paper, colored markers, note paper, pens/pencils, colored flash cards, etc.), and have these items available at the Partnering session. Provide copies of documents for distribution to all attendees.

The Facilitator shall be experienced in conducting Partnering Workshops, and shall be acceptable to both the Government and the Contractor. The Facilitator is responsible for leading the team in a timely manner and making sure that issues are identified and resolved. A list of Partnering Facilitators is available from the Contracting Officer.

a. The Initial Partnering Session shall be a duration of one day minimum. It shall be located at a place off the construction site, as agreed to by the Contracting Officer and the Contractor. It may take place concurrently with the Pre-Construction Meeting.

b. The Follow-on Partnering Session(s) generally last a half day or less. Schedule them at 3 to six month intervals, or when needed. Participants are encouraged to utilize electronic means to expedite meetings. Meetings may be held at a location off-Base, at the project site, or in a Government Facility on Base. Follow-on meetings may be held concurrently with other scheduled meetings. Attendees need only be those required to resolve current issues. Recommend using the same Facilitator from the Initial Partnering session to achieve best results and for continuity.

1.13 AVAILABILITY OF CADD DRAWING FILES

After award and upon request, the electronic "Computer-Aided Drafting and Design (CADD)" drawing files will only be made available to the Contractor for use in preparation of construction data related to the referenced contract subject to the following terms and conditions. Request specific drawing numbers of files required; the entire set of drawing files will not be provided.

Data contained on these electronic files shall not be used for any purpose other than as a convenience in the preparation of construction data for the referenced project. Any other use or reuse shall be at the sole risk of the Contractor and without liability or legal exposure to the Government. The Contractor shall make no claim and waives to the fullest extent permitted by law, any claim or cause of action of any nature against the Government, its agents or sub consultants that may arise out of or in connection with the use of these electronic files. The Contractor shall, to the fullest extent permitted by law, indemnify and hold the Government harmless against all damages, liabilities or costs, including reasonable attorney's fees and defense costs, arising out of or resulting from the use of these electronic files.

These electronic CADD drawing files are not construction documents. Differences may exist between the CADD files and the corresponding construction documents. The Government makes no representation regarding the accuracy or completeness of the electronic CADD files, nor does it make representation to the compatibility of these files with the Contractors hardware or software. In the event that a conflict arises between the signed and sealed construction documents prepared by the Government and the furnished CADD files, the signed and sealed construction documents shall govern. The Contractor is responsible for determining if any conflict exists. Use of these CADD files does not

relieve the Contractor of duty to fully comply with the contract documents, including and without limitation, the need to check, confirm and coordinate the work of all contractors for the project.

If the Contractor uses, duplicates and/or modifies these electronic CADD files for use in producing construction data related to this contract, all previous indicia of ownership (seals, logos, signatures, initials and dates) shall be removed.

1.14 ELECTRONIC MAIL (E-MAIL) ADDRESS

The Contractor shall establish and maintain electronic mail (e-mail) capability along with the capability to open various electronic attachments in Microsoft, Adobe Acrobat, and other similar formats. Within 10 days after contract award, the Contractor shall provide the Contracting Officer a single (only one) e-mail address for electronic communications from the Contracting Officer related to this contract including, but not limited to contract documents, invoice information, request for proposals, and other correspondence. The Contracting Officer may also use email to notify the Contractor of base access conditions when emergency conditions warrant, such as hurricanes, terrorist threats, etc. Multiple email address will not be allowed.

It is the Contractor's responsibility to make timely distribution of all Contracting Officer initiated e-mail with its own organization including field office(s). The Contractor shall promptly notify the Contracting Officer, in writing, of any changes to this email address.

PART 2 PRODUCTS

Not Used

PART 3 EXECUTION

Not Used

-- End of Section --

THIS PAGE HAS BEEN INTENTIONALLY LEFT BLANK

SECTION 01 32 17.00 20

COST-LOADED NETWORK ANALYSIS SCHEDULES (NAS)
02/15

PART 1 GENERAL

1.1 DESCRIPTION

The Contractor is responsible for scheduling procurement, Contractor quality control and construction, acceptance testing and training. Refer to Specification Section 01 33 00 SUBMITTAL PROCEDURES to determine if any items require Government approval prior to construction; if any are required, include that submittal review time in the schedule.

The schedule is a tool to manage the project, both for Contractor and Government activities. It will also be used to report progress and evaluate time extensions. The Project NAS must be cost-loaded and will provide the basis for progress payments. Use the Critical Path Method (CPM) and the Precedence Diagram Method (PDM) to satisfy time and cost applications. For consistency, when scheduling software terminology is used in this specification, the terms in Primavera's scheduling programs are used.

1.2 SUBMITTALS

The use of a "G" following a submittal indicates that a Government approval action is required. Submit the following in accordance with Section 01 33 00 SUBMITTAL PROCEDURES.

SD-01 Preconstruction Submittals

Qualifications; G

Baseline Network Analysis Schedule (NAS); G

SD-07 Certificates

Monthly Network Analysis Schedule Update; G

SD-11 Closeout Submittals

As-Built Schedule; G

1.3 SCHEDULE ACCEPTANCE PRIOR TO START OF WORK

Participate with the Contracting Officer in a preliminary meeting(s) to discuss the proposed schedule and requirements of this section prior to the Contractor preparing the Project Baseline Schedule. Government review comments on the Contractor's schedule(s) do not relieve the Contractor from compliance with requirements of the Contract Documents. Only bonds may be paid prior to acceptance of the Baseline Network Analysis Schedule (NAS) The acceptance of a Baseline NAS is a condition precedent to:

a. The Contractor starting work on the demolition or construction stage(s) of the contract.

b. Processing Contractor's invoices(s) for construction activities/items

of work.

c. Review of any schedule updates.

Submittal of the Baseline Network Analysis Schedule, and subsequent schedule updates, is understood to be the Contractor's certification that the submitted schedule meets all of the requirements of the Contract Documents, represents the Contractor's plan on how the work will be accomplished, and accurately reflects the work that has been accomplished and how it was sequenced (as-built logic).

1.4 SOFTWARE

Prepare and maintain project schedules using Primavera P6. Importing data into P6 using data conversion techniques or third party software is cause for rejection of the submitted schedule.

A listing of Primavera P6 settings and parameters which must be used in preparing the Schedules are contained later in this specification section. Deviation from these settings and parameters, without prior consent of the Contracting Officer, is cause for rejection of schedule submission.

1.5 QUALIFICATIONS

The designated Scheduler for the project must have prepared and maintained at least 3 previous schedules of similar size and complexity of this contract using Primavera P3, Primavera SureTrak, or Primavera P6. At least one of the three must be in Primavera P6. Submit a resume outlining the qualifications of the Scheduler. Payment will not be processed until an acceptable Scheduler is provided.

1.6 NETWORK SYSTEM FORMAT

The system must include time-scaled logic diagrams and specified reports.

1.6.1 Diagrams

Provide Time-scaled Logic Diagram printed in color on ANSI D size sheets. The diagram must clearly show activities on the critical path. Include the following information for each activity:

a. Activity ID

b. Activity Description

c. Original Duration in Work Days

d. Remaining duration in Work Days

e. Physical Percent Complete

f. Start Date

g. Finish Date

h. Total Float

1.6.2 Schedule Activity Properties and Level of Detail

The NAS must identify all Government, Construction Quality Management (CQM), Construction activities planned for the project and all other activities that could impact project completion if delayed. Create separate activities for each Phase, Area, Floor Level and Location the activity is occurring. Activity categories included in the schedule are specified below.

With the exception of the Contract Award and Contract Completion Date (CCD) milestone activities, no activity shall be open-ended; each activity must have predecessor and successor ties. No activity must have open start or open finish (dangling) logic. Minimize redundant logic ties. Once an activity exists on the schedule it must not be deleted or renamed to change the scope of the activity and must not be removed from the schedule logic without approval from the Contracting Officer. While an activity cannot be deleted, where said activity is no longer applicable to the schedule but must remain within the logic stream for historical record, it can be changed to a milestone. Document any such change in the milestone's "Notebook", including a date and explanation for the change. The ID number for a deleted activity must not be re-used for another activity. Within the Baseline Schedule no more than 20 percent of the activities shall be critical or near critical. Critical is defined as having zero days of Total Float. "Near Critical" is defined as having Total Float of 1 to 14 days. Contractor activities must be driven by calendars that reflect Saturdays, Sundays and all Federal Holidays as non-work days.

1.6.2.1 Activity Categories

1.6.2.1.1 Procurement Activities

Examples of procurement activities include, but are not limited to; Material/equipment submittal preparation, submittal and approval of material/equipment; material/equipment fabrication and delivery, and material/equipment on-site. As a minimum, separate procurement activities will be provided for critical items, long lead items, items requiring Government approval and material/equipment procurement for which payment will be requested in advance of installation. Show each delivery with relationship tie to the Construction Activity specifically for the delivery.

1.6.2.1.2 Government Activities

Government and other agency activities that could impact progress must be clearly identified. Government activities include, but are not limited to; Government approved submittal reviews, Government conducted inspections/tests, environmental permit approvals by State regulators, utility outages, and delivery of Government Furnished Material/Equipment.

1.6.2.1.3 Quality Management (QM) Activities

The Preparatory Phase and Initial Phase for each Definable Feature of Work identified in the Contractor's Quality Control Plan must be added to each Three-Week Look Ahead Schedule referenced in the paragraph THREE-WEEK LOOK AHEAD SCHEDULE. The Follow-up Phase will be represented by the Construction Activities in the Baseline Schedule and in the schedule updates.

1.6.2.1.4 Construction Activities

No on-site construction activity may have a duration in excess of 20 working days. Contractor activities must be driven by calendars that reflect Fridays and all Federal Holidays as non-work days, unless otherwise defined in this contract.

1.6.2.1.5 Turnover and Closeout Activities

Include activities with all items on the NAVFAC Red Zone Checklist/POAM that are applicable to this project. As a minimum, include all testing, specialized inspection activities, Pre-Final Inspection, Punch List Completion, Final Inspection and Acceptance. Add a milestone for the Facility Turnover Planning Meeting at approximately 75 percent construction contract completion or three to six months prior to Contract Completion Date (CCD), whichever is sooner.

1.6.2.2 Contract Milestones and Constraints

1.6.2.2.1 Project Start Date Milestones

Include as the first activity on the schedule a start milestone titled "Contract Award", which must have a Mandatory Start constraint equal to the Contract Award Date.

1.6.2.2.2 Facility Turnover Planning Meeting Milestones

See paragraph ACTIVITY CATEGORIES above.

1.6.2.2.3 Substantial Completion Milestone

Include an unconstrained finish milestone on the schedule titled "Substantial Completion". Substantial Completion is defined as the point in time the Government would consider the project ready for beneficial occupancy wherein by mutual agreement of the Government and Contractor, Government use of the facility is allowed while construction access continues in order to complete remaining items (e.g. punch list and other close out submittals).

1.6.2.2.4 Projected Completion Milestone

Include an unconstrained finish milestone on the schedule titled "Projected Completion". Projected Completion is defined as the point in time the Government would consider the project complete. This milestone must have the Contract Completion (CCD) milestone as its only successor.

1.6.2.2.5 Contract Completion Date (CCD) Milestone

Include as the last activity on the schedule a finish milestone titled "Contract Completion (CCD)". Calculation of schedule updates must be such that if the finish of the "Projected Completion" milestone falls after the contract completion date, then negative float will be calculated on the longest path and if the finish of the "Projected Completion" milestone falls before the contract completion date, the float calculation must reflect positive float on the longest path.

1.6.2.3 Work Breakdown Structure & Activity Code

At a minimum, the Contractor must establish a Work Breakdown Structure

(WBS) and provide activity codes identified as follows:

1.6.2.3.1 Work Breakdown Structure (WBS)

Group all activities and milestones within appropriate WBS categories including, at a minimum, the following:

a. Project Milestones:

(1) Management Milestones

(2) Project Administrative Meetings

b. Pre-Construction Phase:

(1) Submittals and Reviews

(2) Procurement

c. Construction Phase; Create multiple sub-sections in accordance with project specific categories of work including in WBS descending order as follows:

(1) General Area

(a) Type of Work Item

1. Location

d. Commissioning & Testing:

(1) Specific area/locations of commissioning

(2) Final Testing

(3) Training

e. Project Closeout: Include activity items such as Punchlist, Demobilization, O&M, As-built Drawings, and As-built NAS.

f. Modifications: Create multiple sub-sections as the project progresses identified by modifications issued.

1.6.2.3.2 Responsibility Code

All activities in the project schedule must be identified with the party responsible for completing the task. Activities must not belong to more than one responsible party.

1.6.2.4 Anticipated Weather Lost Work Days

Use the following schedule of anticipated monthly non-work days due to adverse weather as the basis for establishing a "Weather Calendar" showing the number of anticipated non-workdays for each month due to adverse weather, in addition to Fridays, and all Federal Holidays as non-work days.

MONTHLY ANTICIPATED ADVERSE WEATHER DELAYS											
JAN	FEB	MAR	APR	MAY	JUN	JUL	AUG	SEP	OCT	NOV	DEC
1	1	1	-	-	-	1	1	1	-	-	-

Assign the Weather Calendar to any activity that could be impacted by adverse weather. The Contracting Officer will issue a modification in accordance with the contract clauses, giving the Contractor a time extension for the difference of days between the anticipated and actual adverse weather delay if the number of actual adverse weather delay days exceeds the number of days anticipated for the month in which the delay occurs and the adverse weather delayed activities are critical to contract completion. A lost workday due to weather conditions is defined as a day in which the Contractor cannot work at least 50 percent of the day on the impacted activity.

1.6.2.5 Cost Loading

1.6.2.5.1 Cost Loading Activities

Assign Material and Equipment Costs, for which payment will be requested in advance of installation, to their respective procurement activity (i.e., the material/equipment on-site activity). Assign cost for material/equipment, paid for after installation; labor; and construction equipment to their respective Construction Activities. The value of commissioning, testing and closeout WBS section may not be less than 10 percent of the total costs for Procurement and Construction Activities. Evenly disperse overhead and profit to each activity over the duration of the project.

1.6.2.5.2 Quantities and Units of Measure

Each cost loaded activity must have a detailed quantity breakdown and unit of measure. Lump sum costing is not acceptable.

1.6.3 Schedule Software Settings and Restrictions

a. Activity Constraints: Date/time constraint(s), other than those required by the contract, are not allowed unless accepted by the Contracting Officer. Identify any constraints proposed and provide an explanation for the purpose of the constraint in the Narrative Report as described in paragraph REQUIRED TABULAR REPORTS.

b. Default Progress Data Disallowed: Actual Start and Actual Finish dates on the CPM schedule must match the dates on the Contractor Quality Control and Production Reports.

c. Software Settings: Handle schedule calculations and Out-of-Sequence progress (if applicable) through Retained Logic, not Progress Override. Show all activity durations and float values in days. Show activity progress using Remaining Duration. Set default activity type to "Task Dependent".

d. At a minimum, include the following settings and parameters in Baseline Schedule preparation:

(1) General: Define or establish Calendars and Activity Codes at the

"Project" level, not the "Global" level.

(2) Admin Drop-Down Menu, Admin Preferences, Time Periods Tab:

(a) Set time periods for P6 to 8.0 Hours/Day, 40.0 Hours/Week, 172.0 Hours/Month and 2000.0 Hours/Year.

(b) Use assigned calendar to specify the number of work hours for each time period: Must be checked.

(3) Admin Drop-Down Menu, Admin Preferences, Earned Value Tab:

(a) Earned Value Calculation: Use "Budgeted values with current dates".

(4) Project Level, Dates Tab:

(a) Set "Must Finish By" date to "Contract Completion Date".

(5) Project Level, Defaults Tab:

(a) Duration Type: Set to "Fixed Duration & Units".

(b) Percent Complete Type: Set to "Physical".

(c) Activity Type: Set to "Task Dependent".

(d) Calendar: Set to "Standard 5 Day Workweek". Calendar must reflect Saturday, Sunday and all Federal holidays as non-work days. Alternative calendars may be used with Contracting Officer approval.

(6) Project Level, Calculations Tab:

(a) Activity percent complete based on activity steps: Must be Checked.

(b) Reset Remaining Duration and Units to Original: Must be Checked.

(c) Subtract Actual from At Completion: Must be Checked.

(d) Recalculate Actual units and Cost when duration percent(%) complete changes: Must be Checked.

(e) Link Actual to Date and Actual This Period Units and Cost: Must be Checked.

(f) Price/Unit: Set to "$1/h".

(g) Update units when costs change on resource assignments: Must be Unchecked.

(7) Project Level, Settings Tab:

(a) Define Critical Activities: Check "Total Float is less than or equal to" and add "0d".

(8) Work Breakdown Structure Level, Earned Value Tab:

(a) Technique for Computing Performance Percent Complete: "Activity percent complete" is selected.

(b) Technique for Computing Estimate to Complete (ETC): "PF = 1" is selected.

1.6.4 Required Tabular Reports

Include the following reports with the Baseline, Monthly Update and any other required schedule submittals:

a. Log Report: Listing of all changes made between the previous schedule and current updated schedule.

b. Narrative Report: Identify and justify:

(1) Progress made in each area of the project;

(2) Critical Path;

(3) Date/time constraint(s), other than those required by the contract

(4) Changes in the following; added or deleted activities, original and remaining durations for activities that have not started, logic, milestones, planned sequence of operations, critical path, and cost loading;

(5) Any decrease in previously reported activity Earned Amount;

(6) Pending items and status thereof, including permits, changes orders, and time extensions;

(7) Status of Contract Completion Date and interim milestones;

(8) Current and anticipated delays (describe cause of delay and corrective actions(s) and mitigation measures to minimize);

(9) Description of current and future schedule problem areas.

Each entry in the narrative report must cite the respective Activity ID and Activity Description, the date and reason for the change, and description of the change.

c. Earned Value Report: List all activities having a budget amount cost loaded. Compile total earnings on the project from notice to proceed to current progress payment request. Show current budget, previous physical percent complete, to-date physical percent complete, previous earned value, to-date earned value and cost to complete on the report for each activity.

d. Schedule Variance Control (SVC) Diagram: With each schedule submission, provide a SVC diagram showing 1) Cash Flow S-Curves indicating planned project cost based on projected early and late activity finish dates and 2) Earned Value to-date. Revise Cash Flow S-Curves when the contract is modified, or as directed by the Contracting Officer.

1.7 SUBMISSION AND ACCEPTANCE

1.7.1 Monthly Network Analysis Updates

Meet with Government representatives at monthly intervals to review and agree on the information presented in the updated project schedule. The submission of an acceptable, updated schedule to the Government is a condition precedent to the processing of the Contractor's invoice. Submit an acceptable, updated schedule to the Government regardless of whether a Contractor's invoice is submitted for the given period. The Contractor and Government must consent to agree on percentage of payment for each activity progressed during the update period. Monthly update schedules must incorporate as-built events as they occurred and provide ongoing status of anticipated finish dates. As-built events must correspond to contemporaneous records including but not limited to submittals, daily production reports and quality control reports.

Provide the following with each Schedule submittal:

a. Time-Scaled Logic Diagram.

b. Reports listed in paragraph entitled "REQUIRED TABULAR REPORTS."

c. Data disks containing the project schedule. Include the back-up native .xer program files.

1.7.2 As-Built Schedule

As a condition precedent to the release of retention and making final payment, submit an "As-Built Schedule," as the last schedule update showing all activities at 100 percent completion. This schedule must reflect the exact manner in which the project was actually constructed.

1.8 CONTRACT MODIFICATION

Submit a Time Impact Analysis (TIA) with each cost and time proposal for a proposed change. TIA must illustrate the influence of each change or delay on the Contract Completion Date or milestones. No time extensions will be granted nor delay damages paid unless a delay occurs which consumes all available Project Float, and extends the Projected Finish beyond the Contract Completion Date.

a. Each TIA must be in both narrative and schedule form. The narrative must define the scope and conditions of the change; provide start and finish dates of impact, successor and predecessor activity to impact period, responsible party; describe how it originated, and how it impacts the schedule. The schedule submission must consist of three native files:

   (1) Fragnet used to define the scope of the changed condition

   (2) Most recent accepted schedule update as of the time of the proposal or claim submission that has been updated to show all activity progress as of the time of the impact start date.

   (3) The impacted schedule that has the fragnet inserted in the updated schedule and the schedule “run” so that the new completion date is determined.

b. For claimed as-built project delay, the inserted fragnet TIA method must be modified to account for as-built events known to occur after the data date of schedule update used.

c. All TIAs must include any mitigation, and must determine the apportionment of the overall delay assignable to each individual delay. The associated narrative must clearly describe the findings in a chronological listing beginning with the earliest delay event.

(1) Identify types of delays as follows:

(a) Excusable Delay: Force-Majeure (e.g. weather) - Contractor may receive time extension, but time will not be compensable.

(b) Inexcusable Delay: Contractor Responsibility – Contractor will not receive time extension.

(c) Compensable Delay: Government Responsibility – Contractor may receive compensable time extension.

(2) If a combination of delay types occurs, it is considered Concurrent Delay, which is defined in the following combinations:

(a) Excusable Delay and Compensable Delay results in Excusable Delay

(b) Excusable Delay and Inexcusable Delay results in Inexcusable Delay

(c) Compensable Delay and Inexcusable Delay results in Excusable Delay

d. Submit Data disks containing the narrative and native schedule files.

e. Unless the Contracting Officer requests otherwise, only add conformed contract modifications into the Project NAS.

1.8.1 No Reservation of Rights

All direct costs, indirect cost, and time extensions will be negotiated and made full, equitable and final at the time of modification issuance.

1.9 PROJECT FLOAT

Project Float is the length of time between the Contractor's Projected Completion Milestone and the Contract Completion Date Milestone. Project Float available in the schedule will not be for the exclusive use of either the Government or the Contractor.

The use of Resource Leveling or other techniques used for the purpose of artificially adjusting activity durations to consume float and influence critical path is prohibited.

1.10 THREE-WEEK LOOK AHEAD SCHEDULE

Prepare and issue a 3-Week Look Ahead schedule to provide a more detailed day-to-day plan of upcoming work identified on the Project Network Analysis Schedule. Key the work plans to NAS activity numbers and update

each week to show the planned work for the current and following two-week period. Additionally, include upcoming outages, closures, field evaluation tests, preparatory meetings, and initial meetings. Identify critical path activities on the Three-Week Look Ahead Schedule. The detail work plans are to be bar chart type schedules, derived from but maintained separately from the Project NAS on an electronic spreadsheet program and printed on 216 by 279 mm sheets as directed by the Contracting Officer. Activities must not exceed 5 working days in duration and have sufficient level of detail to assign crews, tools and equipment required to complete the work. Deliver three hard copies and one electronic file of the 3-Week Look Ahead Schedule to the Contracting Officer no later than 8 a.m. each Monday and review during the weekly CQC Coordination or Production Meeting.

1.11 CORRESPONDENCE AND TEST REPORTS

All correspondence (e.g., letters, Requests for Information (RFIs), e-mails, meeting minute items, Production and QC Daily Reports, material delivery tickets, photographs) must reference Schedule activity IDs that are being addressed. All test reports (e.g., concrete, soil compaction, weld, pressure) must reference schedule activity IDs that are being addressed.

1.12 ADDITIONAL SCHEDULING REQUIREMENTS

Any references to additional scheduling requirements, including systems to be inspected, tested and commissioned, that are located throughout the remainder of the Contract Documents, are subject to all requirements of this section.

PART 2 PRODUCTS

Not used.

PART 3 EXECUTION

Not used.

-- End of Section --

THIS PAGE HAS BEEN INTENTIONALLY LEFT BLANK

SECTION 01 33 00

SUBMITTAL PROCEDURES
05/11

PART 1 GENERAL

1.1 SUMMARY

The Contracting Officer may request submittals in addition to those specified when deemed necessary to adequately describe the work covered in the respective sections.

Units of weights and measures used on all submittals are to be the same as those used in the contract drawings.

Each submittal is to be complete and in sufficient detail to allow ready determination of compliance with contract requirements.

Contractor's Quality Control (CQC) System Manager and the Designer of Record, if applicable, to check and approve all items prior to submittal and stamp, sign, and date indicating action taken. Proposed deviations from the contract requirements are to be clearly identified. Include within submittals items such as: Contractor's, manufacturer's, or fabricator's drawings; descriptive literature including (but not limited to) catalog cuts, diagrams, operating charts or curves; test reports; test cylinders; samples; O&M manuals (including parts list); certifications; warranties; and other such required submittals.

Submittals requiring Government approval are to be scheduled and made prior to the acquisition of the material or equipment covered thereby. Pick up and dispose of samples not incorporated into the work in accordance with manufacturer's Material Safety Data Sheets (MSDS) and in compliance with existing laws and regulations.

A submittal register showing items of equipment and materials for when submittals are required by the specifications is provided as "Appendix A - Submittal Register".

1.2 DEFINITIONS

1.2.1 Submittal Descriptions (SD)

Submittals requirements are specified in the technical sections. Submittals are identified by Submittal Description (SD) numbers and titles as follows:

SD-01 Preconstruction Submittals

Submittals which are required prior to start of construction (work). issuance of contract notice to proceed.or commencing work on site.or the start of the next major phase of the construction on a multi-phase contract, includes schedules, tabular list of data, or tabular list including location, features, or other pertinent information regarding products, materials, equipment, or components to be used in the work.

Certificates of insurance

Surety bonds

List of proposed Subcontractors

List of proposed products

Construction progress schedule

Network Analysis Schedule (NAS)

Submittal register

Earned Value Report

Health and safety plan

Work plan

Quality Control(QC) plan

Environmental protection plan

SD-02 Shop Drawings

Drawings, diagrams and schedules specifically prepared to illustrate some portion of the work.

Diagrams and instructions from a manufacturer or fabricator for use in producing the product and as aids to the Contractor for integrating the product or system into the project.

Drawings prepared by or for the Contractor to show how multiple systems and interdisciplinary work will be coordinated.

SD-03 Product Data

Catalog cuts, illustrations, schedules, diagrams, performance charts, instructions and brochures illustrating size, physical appearance and other characteristics of materials, systems or equipment for some portion of the work.

Samples of warranty language when the contract requires extended product warranties.

SD-04 Samples

Fabricated or unfabricated physical examples of materials, equipment or workmanship that illustrate functional and aesthetic characteristics of a material or product and establish standards by which the work can be judged.

Color samples from the manufacturer's standard line (or custom color samples if specified) to be used in selecting or approving colors for the project.

Field samples and mock-ups constructed on the project site establish standards by which the ensuring work can be judged. Includes assemblies or portions of assemblies which are to be incorporated into the project and those which will be removed at conclusion of the work.

SD-05 Design Data

Design calculations, mix designs, analyses or other data pertaining to a part of work.

Design submittals, design substantiation submittals and extensions of design submittals.

SD-06 Test Reports

Report signed by authorized official of testing laboratory that a material, product or system identical to the material, product or system to be provided has been tested in accord with specified requirements. Unless specified in another section, testing must have been within three years of date of contract award for the project.

Report which includes findings of a test required to be performed by the Contractor on an actual portion of the work or prototype prepared for the project before shipment to job site.

Report which includes finding of a test made at the job site or on sample taken from the job site, on portion of work during or after installation.

Investigation reports.

Daily logs and checklists.

Final acceptance test and operational test procedure.

SD-07 Certificates

Statements printed on the manufacturer's letterhead and signed by responsible officials of manufacturer of product, system or material attesting that product, system or material meets specification requirements. Must be dated after award of project contract and clearly name the project.

Document required of Contractor, or of a manufacturer, supplier, installer or Subcontractor through Contractor. The document purpose is to further promote the orderly progression of a portion of the work by documenting procedures, acceptability of methods or personnel qualifications.

Confined space entry permits.

Text of posted operating instructions.

SD-08 Manufacturer's Instructions

Preprinted material describing installation of a product, system or material, including special notices and (MSDS)concerning impedances, hazards and safety precautions.

SD-09 Manufacturer's Field Reports

Documentation of the testing and verification actions taken by manufacturer's representative at the job site, in the vicinity of the

job site, or on a sample taken from the job site, on a portion of the work, during or after installation, to confirm compliance with manufacturer's standards or instructions. The documentation must be signed by an authorized official of a testing laboratory or agency and state the test results; and indicate whether the material, product, or system has passed or failed the test.

Factory test reports.

SD-10 Operation and Maintenance Data

Data that is furnished by the manufacturer, or the system provider, to the equipment operating and maintenance personnel, including manufacturer's help and product line documentation necessary to maintain and install equipment. This data is needed by operating and maintenance personnel for the safe and efficient operation, maintenance and repair of the item.

This data is intended to be incorporated in an operations and maintenance manual or control system.

SD-11 Closeout Submittals

Documentation to record compliance with technical or administrative requirements or to establish an administrative mechanism.

Submittals required for Guiding Principle Validation (GPV) or Third Party Certification (TPC).

Special requirements necessary to properly close out a construction contract. For example, Record Drawings and as-built drawings. Also, submittal requirements necessary to properly close out a major phase of construction on a multi-phase contract.

1.2.2 Approving Authority

Office or designated person authorized to approve submittal.

1.2.3 Work

As used in this section, on- and off-site construction required by contract documents, including labor necessary to produce submittals, except those SD-01 Pre-Construction Submittals noted above, construction, materials, products, equipment, and systems incorporated or to be incorporated in such construction.

1.3 SUBMITTALS

Government approval is required for submittals with a "G" designation; submittals not having a "G" designation are for Contractor QC approval. Submittals with an "S" are for inclusion in the Sustainability Notebook, in conformance to Section 01 33 29 SUSTAINABILITY REPORTING. Submit the following in accordance with this section.

SD-01 Preconstruction Submittals

Submittal Register; G

1.4 SUBMITTAL CLASSIFICATION

Submittals are classified as follows:

1.4.1 Government Approved (G)

Government approval is required for extensions of design, critical materials, deviations, equipment whose compatibility with the entire system must be checked, and other items as designated by the Contracting Officer. Government approval is required for any deviations from the Solicitation or Accepted Proposal and other items as designated by the Contracting Officer. Within the terms of the Contract Clause SPECIFICATIONS AND DRAWINGS FOR CONSTRUCTION, they are considered to be "shop drawings."

1.4.2 Sustainability Reporting Submittals (S)

Submittals for Guiding Principle Validation (GPV) or Third Party Certification (TPC) are indicated with an "S" designation. Submit the information required by the technical sections that demonstrates compliance with the sustainable requirement, and for inclusion in the Sustainability Notebook as required by Section 01 33 29 SUSTAINABILITY REPORTING. A full submittal for an item may be provided under another SD; however, for the "S" submittal, only provide that portion of the submittal that demonstrates compliance with the sustainable requirement. If the sustainable submittal does require Government Approval, it may be tagged under another SD with a "G."

Schedule submittals for these items throughout the course of construction as provided; do not wait until closeout.

1.5 FORWARDING SUBMITTALS REQUIRING GOVERNMENT APPROVAL

1.5.1 Submittals Required from the Contractor

As soon as practicable after award of contract, and before procurement of fabrication, forward to the Architect-Engineer: Austin Brockenbrough & Associates, LLP, 1011 Boulder Springs Drive, Suite 200, Richmond, VA 23225. submittals required in the technical sections of this specification, including shop drawings, product data and samples. Forward one copy of the transmittal form for all submittals to the Resident Officer in Charge of Construction.

The Architect-Engineer for this project will review and approve for the Contracting Officer those submittals reserved for Contracting Officer approval to verify submittals comply with the contract requirements.

1.5.1.1 O&M Data

The Architect-Engineer for this project will review and approve for the Contracting Officer O&M Data to verify the submittals comply with the contract requirements; submit data specified for a given item within 30 calendar days after the item is delivered to the contract site.

In the event the Contractor fails to deliver O&M Data within the time limits specified, the Contracting Officer may withhold from progress payments 50 percent of the price of the item with which such O&M Data are applicable.

1.5.1.2 Overseas Shop Drawing Submittals

Send all submittals via both overnight express mail service and electronically via email. All costs associated with the overnight express mail service shall be borne by the construction Contractor. Costs associated with the overnight express mail of submittals related to proposed submittal variances of resubmittals necessary as a result of noncompliant or incomplete Contractor submittals are the responsibility of the Contractor.

1.6 PREPARATION

1.6.1 Transmittal Form

Transmit each submittal, except sample installations and sample panels to office of approving authority. Transmit submittals with transmittal form prescribed by Contracting Officer and standard for project. On the transmittal form identify Contractor, indicate date of submittal, and include information prescribed by transmittal form and required in paragraph IDENTIFYING SUBMITTALS of this section. Process transmittal forms to record actions regarding sample.

1.6.2 Identifying Submittals

When submittals are provided by a Subcontractor, the Prime Contractor is to prepare, review and stamp with Contractor's approval all specified submittals prior to submitting for Government approval.

Identify submittals, except sample installations and sample panels, with the following information permanently adhered to or noted on each separate component of each submittal and noted on transmittal form. Mark each copy of each submittal identically, with the following:

a. Project title and location.

b. Construction contract number.

c. Date of the drawings and revisions.

d. Name, address, and telephone number of subcontractor, supplier, manufacturer and any other subcontractor associated with the submittal.

e. Section number of the specification section by which submittal is required.

f. Submittal description (SD) number of each component of submittal.

g. When a resubmission, add alphabetic suffix on submittal description, for example, submittal 18 would become 18A, to indicate resubmission.

h. Product identification and location in project.

1.6.3 Format for SD-02 Shop Drawings

Shop drawings are not to be less than 210 by 297 mm nor more than 1189 by 841 mm, except for full size patterns or templates. Prepare drawings to

accurate size, with scale indicated, unless other form is required. Drawings are to be suitable for reproduction and be of a quality to produce clear, distinct lines and letters with dark lines on a white background.

Present 210 by 297 mm sized shop drawings as part of the bound volume for submittals required by section. Present larger drawings in sets.

Include on each drawing the drawing title, number, date, and revision numbers and dates, in addition to information required in paragraph IDENTIFYING SUBMITTALS.

Number drawings in a logical sequence. Each drawing is to bear the number of the submittal in a uniform location adjacent to the title block. Place the Government contract number in the margin, immediately below the title block, for each drawing.

Reserve a blank space, no smaller than 50 millimeter on the right hand side of each sheet for the Government disposition stamp.

Dimension drawings, except diagrams and schematic drawings; prepare drawings demonstrating interface with other trades to scale. Use the same unit of measure for shop drawings as indicated on the contract drawings. Identify materials and products for work shown.

Include the nameplate data, size and capacity on drawings. Also include applicable federal, military, industry and technical society publication references.

Submit drawings PDF format.

1.6.4 Format of SD-03 Product Data and SD-08 Manufacturer's Instructions

Present product data submittals for each section as a complete, bound volume. Include table of contents, listing page and catalog item numbers for product data.

Indicate, by prominent notation, each product which is being submitted; indicate specification section number and paragraph number to which it pertains.

Supplement product data with material prepared for project to satisfy submittal requirements for which product data does not exist. Identify this material as developed specifically for project, with information and format as required for submission of SD-07 Certificates.

Provide product data in metric dimensions. Where product data are included in preprinted catalogs with English units only, submit metric dimensions on separate sheet.

Include the manufacturer's name, trade name, place of manufacture, and catalog model or number on product data. Also include applicable federal, military, industry and technical society publication references. Should manufacturer's data require supplemental information for clarification, submit as specified for SD-07 Certificates.

Where equipment or materials are specified to conform to industry and technical society reference standards of the organizations such as American National Standards Institute (ANSI), ASTM International (ASTM),

National Electrical Manufacturer's Association (NEMA), Underwriters Laboratories (UL), and Association of Edison Illuminating Companies (AEIC), submit proof of such compliance. The label or listing by the specified organization will be acceptable evidence of compliance. In lieu of the label or listing, submit a certificate from an independent testing organization, competent to perform testing, and approved by the Contracting Officer. State on the certificate that the item has been tested in accordance with the specified organization's test methods and that the item complies with the specified organization's reference standard.

Collect required data submittals for each specific material, product, unit of work, or system into a single submittal and marked for choices, options, and portions applicable to the submittal. Mark each copy of the product data identically. Partial submittals will not be accepted for expedition of construction effort.

Submit manufacturer's instructions prior to installation.

1.6.5 Format of SD-04 Samples

Furnish samples in sizes below, unless otherwise specified or unless the manufacturer has prepackaged samples of approximately same size as specified:

a. Sample of Equipment or Device: Full size.

b. Sample of Materials Less Than 50 by 75 mm: Built up to 210 by 297 mm.

c. Sample of Materials Exceeding 210 by 297 mm: Cut down to 210 by 297 mm and adequate to indicate color, texture, and material variations.

d. Sample of Linear Devices or Materials: 250 mm length or length to be supplied, if less than 250 mm. Examples of linear devices or materials are conduit and handrails.

e. Sample of Non-Solid Materials: 750 ml. Examples of non-solid materials are sand and paint.

f. Color Selection Samples: 50 by 100 mm. Where samples are specified for selection of color, finish, pattern, or texture, submit the full set of available choices for the material or product specified. Sizes and quantities of samples are to represent their respective standard unit.

g. Sample Panel: 1200 by 1200 mm.

h. Sample Installation: 10 square meters.

Samples Showing Range of Variation: Where variations in color, finish, pattern, or texture are unavoidable due to nature of the materials, submit sets of samples of not less than three units showing extremes and middle of range. Mark each unit to describe its relation to the range of the variation.

Reusable Samples: Incorporate returned samples into work only if so specified or indicated. Incorporated samples are to be in undamaged condition at time of use.

Recording of Sample Installation: Note and preserve the notation of area constituting sample installation but remove notation at final clean up of project.

When color, texture or pattern is specified by naming a particular manufacturer and style, include one sample of that manufacturer and style, for comparison.

1.6.6 Format of SD-05 Design Data and SD-07 Certificates

Provide design data and certificates on 210 by 297 mm paper. Provide a bound volume for submittals containing numerous pages.

1.6.7 Format of SD-06 Test Reports and SD-09 Manufacturer's Field Reports

Provide reports on 210 by 297 mm paper in a complete bound volume.

Indicate by prominent notation, each report in the submittal. Indicate specification number and paragraph number to which it pertains.

1.6.8 Format of SD-10 Operation and Maintenance Data (O&M)

Comply with the requirements specified in Section 01 78 23 OPERATION AND MAINTENANCE DATA for O&M Data format.

1.6.9 Format of SD-01 Preconstruction Submittals and SD-11 Closeout Submittals

When submittal includes a document which is to be used in project or become part of project record, other than as a submittal, do not apply Contractor's approval stamp to document, but to a separate sheet accompanying document.

Provide all dimensions in administrative submittals in metric. Where data are included in preprinted material with English units only, submit metric dimensions on separate sheet.

1.6.10 Source Drawings for Shop Drawings

The entire set of Source Drawing files (DWG) will not be provided to the Contractor. Only those requested by the Contractor to prepare shop drawings may be provided. Request the specific Drawing Number only for the preparation of Shop Drawings. These drawings may only be provided after award.

1.6.10.1 Terms and Conditions

Data contained on these electronic files must not be used for any purpose other than as a convenience in the preparation of construction data for the referenced project. Any other use or reuse shall be at the sole risk of the Contractor and without liability or legal exposure to the Government. The Contractor must make no claim and waives to the fullest extent permitted by law, any claim or cause of action of any nature against the Government, its agents or sub consultants that may arise out of or in connection with the use of these electronic files. The Contractor must, to the fullest extent permitted by law, indemnify and hold the Government harmless against all damages, liabilities or costs, including reasonable attorney's fees and defense costs, arising out of or resulting from the use of these electronic files.

These electronic Source Drawing files are not construction documents. Differences may exist between the Source Drawing files and the corresponding construction documents. The Government makes no representation regarding the accuracy or completeness of the electronic Source Drawing files, nor does it make representation to the compatibility of these files with the Contractor hardware or software. In the event that a conflict arises between the signed and sealed construction documents prepared by the Government and the furnished Source Drawing files, the signed and sealed construction documents govern. The Contractor is responsible for determining if any conflict exists. Use of these Source Drawing files does not relieve the Contractor of duty to fully comply with the contract documents, including and without limitation, the need to check, confirm and coordinate the work of all contractors for the project. If the Contractor uses, duplicates or modifies these electronic Source Drawing files for use in producing construction data related to this contract, remove all previous indicia of ownership (seals, logos, signatures, initials and dates).

1.6.11 Electronic File Format

Provide submittals in electronic format, with the exception of material samples required for SD-04 Samples items. In addition to the electronic submittal, provide three hard copies of the submittals. Compile the submittal file as a single, complete document, to include the Transmittal Form described within. Name the electronic submittal file specifically according to its contents, coordinate the file naming convention with the Contracting Officer. Electronic files must be of sufficient quality that all information is legible. Electronic format shall be in PDF, unless otherwise specified or directed by the Contracting Officer. Generate PDF files from original documents with bookmarks so that the text included in the PDF file is both searchable and can be copied. If documents are scanned, Optical Character Resolution (OCR) routines are required. Index and bookmark files exceeding 30 pages to allow efficient navigation of the file. When required, the electronic file must include a valid electronic signature, or scan of a signature.

Email electronic submittal documents fewer than 10MB to an email address as directed by the Contracting Officer. Provide electronic documents over 10MB on an optical disc, or through an electronic file sharing system such as the AMRDEC SAFE Web Application located at the following website: https://safe.amrdec.army.mil/safe/.

Provide hard copies of submittals when requested by the Contracting Officer. Up to three additional hard copies of any submittal may be requested at the discretion of the Contracting Officer, at no additional cost to the Government.

1.7 QUANTITY OF SUBMITTALS

1.7.1 Number of Copies of SD-02 Shop Drawings

Submit six copies of submittals of shop drawings requiring review and approval only by QC organization and seven copies of shop drawings requiring review and approval by Contracting Officer.

1.7.2 Number of Copies of SD-03 Product Data and SD-08 Manufacturer's Instructions

Submit in compliance with quantity requirements specified for shop drawings.

1.7.3 Number of Samples SD-04 Samples

a. Submit one sample, or one set of samples showing range of variation, of each required item.

b. Submit one sample panel or provide one sample installation where directed. Include components listed in technical section or as directed.

c. Submit one sample installation, where directed.

d. Submit one sample of non-solid materials.

1.7.4 Number of Copies SD-05 Design Data and SD-07 Certificates

Submit in compliance with quantity requirements specified for shop drawings.

1.7.5 Number of Copies SD-06 Test Reports and SD-09 Manufacturer's Field Reports

Submit in compliance with quantity and quality requirements specified for shop drawings other than field test results that will be submitted with QC reports.

1.7.6 Number of Copies of SD-10 Operation and Maintenance Data

Submit three copies of O&M Data to the Contracting Officer for review and approval.

1.7.7 Number of Copies of SD-01 Preconstruction Submittals and SD-11 Closeout Submittals

Unless otherwise specified, submit three sets of administrative submittals.

1.8 VARIATIONS

Variations from contract requirements require both Designer of Record (DOR) and Government approval pursuant to contract Clause FAR 52.236-21 and will be considered where advantageous to Government.

1.8.1 Considering Variations

Discussion with Contracting Officer prior to submission, after consulting with the DOR, will help ensure functional and quality requirements are met and minimize rejections and re-submittals. When contemplating a variation which results in lower cost, consider submission of the variation as a Value Engineering Change Proposal (VECP).

Specifically point out variations from contract requirements in transmittal letters. Failure to point out deviations may result in the Government requiring rejection and removal of such work at no additional cost to the Government.

1.8.2 Proposing Variations

When proposing variation, deliver written request to the Contracting Officer, with documentation of the nature and features of the variation and why the variation is desirable and beneficial to Government, including the DOR's written analysis and approval. If lower cost is a benefit, also include an estimate of the cost savings. In addition to documentation required for variation, include the submittals required for the item. Clearly mark the proposed variation in all documentation.

1.8.3 Warranting that Variations are Compatible

When delivering a variation for approval, Contractor, including its Designer(s) of Record, warrants that this contract has been reviewed to establish that the variation, if incorporated, will be compatible with other elements of work.

1.8.4 Review Schedule is Modified

In addition to normal submittal review period, a period of 10 working days will be allowed for consideration by the Government of submittals with variations.

1.9 SUBMITTAL REGISTER AND DATABASE

Prepare and maintain submittal register, as the work progresses. Use electronic submittal register program furnished by the Government or any other format. Do not change data which is output in columns (c), (d), (e), and (f) as delivered by Government; retain data which is output in columns (a), (g), (h), and (i) as approved. A submittal register showing items of equipment and materials for which submittals are required by the specifications is provided as an attachment. This list may not be all inclusive and additional submittals may be required. Maintain a submittal register for the project in accordance with Section 01 45 00.00 20 QUALITY CONTROL SYSTEM (QCS).

Column (c): Lists specification section in which submittal is required.

Column (d): Lists each submittal description (SD No. and type, e.g. SD-02 Shop Drawings) required in each specification section.

Column (e): Lists one principal paragraph in specification section where a material or product is specified. This listing is only to facilitate locating submitted requirements. Do not consider entries in column (e) as limiting project requirements.

Column (f): Indicate approving authority for each submittal.

Thereafter, the Contractor is to track all submittals by maintaining a complete list, including completion of all data columns, including dates on which submittals are received and returned by the Government.

1.9.1 Use of Submittal Register

Submit submittal register as an electronic database, using submittals management program furnished to Contractor. Submit with QC plan and project schedule. Verify that all submittals required for project are

listed and add missing submittals. Coordinate and complete the following fields on the register database submitted with the QC plan and the project schedule:

Column (a) Activity Number: Activity number from the project schedule.

Column (g) Contractor Submit Date: Scheduled date for approving authority to receive submittals.

Column (h) Contractor Approval Date: Date Contractor needs approval of submittal.

Column (i) Contractor Material: Date that Contractor needs material delivered to Contractor control.

1.9.2 Contractor Use of Submittal Register

Update the following fields in the Government-furnished submittal register program or equivalent fields in program utilized by Contractor with each submittal throughout contract.

Column (b) Transmittal Number: Contractor assigned list of consecutive numbers.

Column (j) Action Code (k): Date of action used to record Contractor's review when forwarding submittals to QC.

Column (l) List date of submittal transmission.

Column (q) List date approval received.

1.9.3 Approving Authority Use of Submittal Register

Update the following fields in the Government-furnished submittal register program or equivalent fields in program utilized by Contractor.

Column (b) Transmittal Number: Contractor assigned list of consecutive numbers.

Column (l) List date of submittal receipt.

Column (m) through (p) List Date related to review actions.

Column (q) List date returned to Contractor.

1.9.4 Action Codes

Entries for columns (j) and (o), are to be used are as follows (others may be prescribed by Transmittal Form):

1.9.4.1 Government Review Action Codes

"A" - "Approved as submitted"; "Completed"

"B" - "Approved, except as noted on drawings"; "Completed"

"C" - "Approved, except as noted on drawings; resubmission required"; "Resubmit"

"D" - "Returned by separate correspondence"; "Completed"

"E" - "Disapproved (See attached)"; "Resubmit"

"F" - "Receipt acknowledged"; "Completed"

"G" - "Other (Specify)"; "Resubmit"

"X" - "Receipt acknowledged, does not comply with contract requirements"; "Resubmit"

1.9.4.2 Contractor Action Codes

NR - Not Received

AN - Approved as noted

A - Approved

RR - Disapproved, Revise, and Resubmit

1.9.5 Copies Delivered to the Government

Deliver one copy of submittal register updated by Contractor to Government with each invoice request. Deliver in electronic format, unless a paper copy is requested by Contracting Officer.

1.10 SCHEDULING

Schedule and submit concurrently submittals covering component items forming a system or items that are interrelated. Include certifications to be submitted with the pertinent drawings at the same time. No delay damages or time extensions will be allowed for time lost in late submittals. An additional 15 calendar days will be allowed and shown on the register for review and approval of submittals for refrigeration and HVAC control systems.

a. Coordinate scheduling, sequencing, preparing and processing of submittals with performance of work so that work will not be delayed by submittal processing. Allow for potential resubmittal of requirements.

b. Submittals called for by the contract documents will be listed on the register. If a submittal is called for but does not pertain to the contract work, the Contractor is to include the submittal in the register and annotate it "N/A" with a brief explanation. Approval by the Contracting Officer does not relieve the Contractor of supplying submittals required by the contract documents but which have been omitted from the register or marked "N/A."

c. Re-submit register and annotate monthly by the Contractor with actual submission and approval dates. When all items on the register have been fully approved, no further re-submittal is required.

d. Carefully control procurement operations to ensure that each individual submittal is made on or before the Contractor scheduled submittal date shown on the approved "Submittal Register."

e. Except as specified otherwise, allow review period, beginning with

receipt by approving authority, that includes at least 15 working days for submittals for QC Manager approval and 20 working days for submittals for Contracting Officer approval. Period of review for submittals with Contracting Officer approval begins when Government receives submittal from QC organization.

f. For submittals requiring review by fire protection engineer, allow review period, beginning when Government receives submittal from QC organization, of 30 working days for return of submittal to the Contractor.

g. Period of review for each resubmittal is the same as for initial submittal.

1.10.1 Reviewing, Certifying, Approving Authority

The QC organization is responsible for reviewing and certifying that submittals are in compliance with contract requirements. Approving authority on submittals is QC Manager unless otherwise specified for specific submittal. At each "Submittal" paragraph in individual specification sections, a notation "G," following a submittal item, indicates Contracting Officer is approving authority for that submittal item. An "S" following a submittal item, indicates that the QC Manager is the approving authority, and that a copy of the approved submittal must be provided to the Designer of Record.

1.10.2 Constraints

Conform to provisions of this section, unless explicitly stated otherwise for submittals listed or specified in this contract.

Submit complete submittals for each definable feature of work. Submit at the same time components of definable feature interrelated as a system.

When acceptability of a submittal is dependent on conditions, items, or materials included in separate subsequent submittals, submittal will be returned without review.

Approval of a separate material, product, or component does not imply approval of assembly in which item functions.

1.10.3 QC Organization Responsibilities

a. Note date on which submittal was received from Contractor on each submittal.

b. Review each submittal; and check and coordinate each submittal with requirements of work and contract documents.

c. Review submittals for conformance with project design concepts and compliance with contract documents.

d. Act on submittals, determining appropriate action based on QC organization's review of submittal.

(1) When QC Manager is approving authority, take appropriate action on submittal from the possible actions defined in paragraph APPROVED SUBMITTALS.

(2) When Contracting Officer is approving authority or when variation has been proposed, forward submittal to Government with certifying statement or return submittal marked "not reviewed" or "revise and resubmit" as appropriate. The QC organization's review of submittal determines appropriate action.

e. Ensure that material is clearly legible.

f. Stamp each sheet of each submittal with QC certifying statement or approving statement, except that data submitted in bound volume or on one sheet printed on two sides may be stamped on the front of the first sheet only.

(1) When approving authority is Contracting Officer, QC organization will certify submittals forwarded to Contracting Officer with the following certifying statement:

"I hereby certify that the (equipment) (material) (article) shown and marked in this submittal is that proposed to be incorporated with contract Number _____, is in compliance with the contract drawings and specification, can be installed in the allocated spaces, and is submitted for Government approval.

Certified by Submittal Reviewer _____, Date _____
(Signature when applicable)

Certified by QC Manager _____, Date _____"
(Signature)

(2) When approving authority is QC Manager, QC Manager will use the following approval statement when returning submittals to Contractor as "Approved" or "Approved as Noted."

"I hereby certify that the (material) (equipment) (article) shown and marked in this submittal and proposed to be incorporated with contract Number, is in compliance with the contract drawings and specification, can be installed in the allocated spaces, and is approved for use.

Certified by Submittal Reviewer _____, Date _____
(Signature when applicable)

Approved by QC Manager _____, Date _____"
(Signature)

g. Sign certifying statement or approval statement. The QC organization member designated in the approved QC plan is the person signing certifying statements. The use of original ink for signatures is required. Stamped signatures are not acceptable.

h. Update submittal register as submittal actions occur and maintain the submittal register at project site until final acceptance of all work by Contracting Officer.

i. Retain a copy of approved submittals at project site, including Contractor's copy of approved samples.

j. For "S" submittals, provide a copy of the approved submittal to the Designer of Record.

1.11 GOVERNMENT APPROVING AUTHORITY

When approving authority is Contracting Officer, the Government will:

a. Note date on which submittal was received from QC Manager.

b. Review submittals for approval within scheduling period specified and only for conformance with project design concepts and compliance with contract documents.

c. Identify returned submittals with one of the actions defined in paragraph REVIEW NOTATIONS and with markings appropriate for action indicated.

Upon completion of review of submittals requiring Government approval, stamp and date submittals. Two copies of the submittal will be retained by the Contracting Officer and remaining copies of the submittal will be returned to the Contractor. If the Government performs a conformance review of other Designer of Record approved submittals, the submittals will be so identified and returned, as described above.

1.11.1 Review Notations

Submittals will be returned to the Contractor with the following notations:

a. Submittals marked "approved" or "accepted" authorize the Contractor to proceed with the work covered.

b. Submittals marked "approved as noted" "or approved, except as noted, resubmittal not required," authorize the Contractor to proceed with the work covered provided he takes no exception to the corrections.

c. Submittals marked "not approved" or "disapproved," or "revise and resubmit," indicate noncompliance with the contract requirements or design concept, or that submittal is incomplete. Resubmit with appropriate changes. No work shall proceed for this item until resubmittal is approved.

d. Submittals marked "not reviewed" will indicate submittal has been previously reviewed and approved, is not required, does not have evidence of being reviewed and approved by Contractor, or is not complete. A submittal marked "not reviewed" will be returned with an explanation of the reason it is not reviewed. Resubmit submittals returned for lack of review by Contractor or for being incomplete, with appropriate action, coordination, or change.

1.12 DISAPPROVED SUBMITTALS

Contractor shall make corrections required by the Contracting Officer. If the Contractor considers any correction or notation on the returned submittals to constitute a change to the contract drawings or specifications; notice as required under the Contract clause CHANGES, is to be given to the Contracting Officer. Contractor is responsible for the dimensions and design of connection details and construction of work. Failure to point out deviations may result in the Government requiring rejection and removal of such work at the Contractor's expense.

If changes are necessary to submittals, make such revisions and submission of the submittals in accordance with the procedures above. No item of

work requiring a submittal change is to be accomplished until the changed submittals are approved.

1.13 APPROVED SUBMITTALS

The Contracting Officer's approval or acceptance of submittals is not to be construed as a complete check, and indicates only that the general method of construction, materials, detailing and other information are satisfactory. design, general method of construction, materials, detailing and other information appear to meet the Solicitation and Accepted Proposal.

Approval or acceptance will not relieve the Contractor of the responsibility for any error which may exist, as the Contractor under the Contractor Quality Control (CQC) requirements of this contract is responsible for dimensions, the design of adequate connections and details, and the satisfactory construction of all work design, dimensions, all design extensions, such as the design of adequate connections and details, etc., and the satisfactory construction of all work.

After submittals have been approved or accepted by the Contracting Officer, no resubmittal for the purpose of substituting materials or equipment will be considered unless accompanied by an explanation of why a substitution is necessary.

1.14 APPROVED SAMPLES

Approval of a sample is only for the characteristics or use named in such approval and is not be construed to change or modify any contract requirements. Before submitting samples, the Contractor to assure that the materials or equipment will be available in quantities required in the project. No change or substitution will be permitted after a sample has been approved.

Match the approved samples for materials and equipment incorporated in the work. If requested, approved samples, including those which may be damaged in testing, will be returned to the Contractor, at his expense, upon completion of the contract. Samples not approved will also be returned to the Contractor at its expense, if so requested.

Failure of any materials to pass the specified tests will be sufficient cause for refusal to consider, under this contract, any further samples of the same brand or make of that material. Government reserves the right to disapprove any material or equipment which previously has proved unsatisfactory in service.

Samples of various materials or equipment delivered on the site or in place may be taken by the Contracting Officer for testing. Samples failing to meet contract requirements will automatically void previous approvals. Contractor to replace such materials or equipment to meet contract requirements.

Approval of the Contractor's samples by the Contracting Officer does not relieve the Contractor of his responsibilities under the contract.

1.15 WITHHOLDING OF PAYMENT

Payment for materials incorporated in the work will not be made if required approvals have not been obtained. No payment for materials

incorporated in the work will be made if all required Designer of Record or required Government approvals have not been obtained. No payment will be made for any materials incorporated into the work for any conformance review submittals or information only submittals found to contain errors or deviations from the Solicitation or Accepted Proposal.

1.16 PROGRESS SCHEDULE

1.16.1 Project Network Analysis

Submit the initial progress schedule within 21 calendar days of notice to proceed. Schedule is to be updated and resubmitted monthly beginning 7 calendar days after return of the approved initial schedule. Updating to entail complete revision of the graphic and data displays incorporating changes in scheduled dates and performance periods. Redlined updates will only be acceptable for use as weekly status reviews.

Contractor to provide a single point contact from his on-site organization as his Schedule Specialist. Schedule Specialist is to have the responsibility of updating and coordinating the schedule with actual job conditions. Schedule Specialist to participate in weekly status meetings and present current information on the status of purchase orders, shop drawings, off-site fabrication, materials deliveries, Subcontractor activities, anticipated needs for Government furnished equipment, and any problem which may impact the contract performance period.

Include the following in the project network analysis:

a. Graphically display with the standard network or arrow diagram capable of illustrating the required data. Drafting to be computer generated on standard 609 by 914 millimeter drafting sheets or on small 279 by 432 millimeter minimum sheets with separate overview and detail breakouts. Provide a project network analysis that is legible with a clear, consistent method for continuations and detail referencing. Clearly delineate the critical path on the display. Clearly indicate the contract milestone date on the project network analysis graphic display.

b. Data is to be presented as a separate printout on paper or, where feasible, may be printed on the same sheet as the graphic display. Data is to be organized in a logical coherent display capable of periodic updating.

c. Include within the data verbal activity descriptions with a numerical ordering system cross referenced to the graphic display. Additionally, costs (broken down into separate materials and costs), duration, early start date, early finish date, late start date, late finish date, and float are to be detailed for each activity. A running total of the percent completion based on completed activity costs versus total contract cost is to be indicated. A system for indicating scheduled versus actual activity dates and durations is also to be provided.

d. Sufficient detail to facilitate the Contractor's control of the job and to allow the Contracting Officer to readily follow progress for portions of the work should be shown within the schedule.

1.17 STATUS REPORT ON MATERIALS ORDERS

Within 30 calendar days after notice to proceed, submit, for approval by the Contracting Officer, an initial material status report on all materials orders. This report will be updated and re-submitted every 30 calendar days as the status on material orders changes.

Report to include list, in chronological order by need date, materials orders necessary for completion of the contract. The following information will be required for each material order listed:

a. Material name, supplier, and invoice number.

b. Bar chart line item or CPM activity number affected by the order.

c. Delivery date needed to allow directly and indirectly related work to be completed within the contract performance period.

d. Current delivery date agreed on by supplier.

e. When item d exceeds item c, the effect that delayed delivery date will have on contract completion date.

f. When item d exceeds item c, a summary of efforts made by the Contractor to expedite the delayed delivery date to bring it in line with the needed delivery date, including efforts made to place the order (or subcontract) with other suppliers.

PART 2 PRODUCTS

Not Used

PART 3 EXECUTION

Not Used

-- End of Section --

SUBMITTAL REGISTER

CONTRACT NO.

TITLE AND LOCATION
Djibouti Fuel Storage Facility

CONTRACTOR

ACTIVITY NO	TRANSMITTAL NO	SPEC SECT	DESCRIPTION ITEM SUBMITTED	PARAGRAPH #	CLASSIFICATION	GOVT OR A/E REVWR	CONTRACTOR: SCHEDULE DATES			CONTRACTOR ACTION			APPROVING AUTHORITY				MAILED TO CONTR/ DATE RCD FRM APPR AUTH	REMARKS
							SUBMIT	APPROVAL NEEDED BY	MATERIAL NEEDED BY	ACTION CODE	DATE OF ACTION	DATE FWD TO APPR AUTH/ DATE RCD FROM CONTR	DATE FWD TO OTHER REVIEWER	DATE RCD FROM OTH REVIEWER	ACTION CODE	DATE OF ACTION		
(a)	(b)	(c)	(d)	(e)	(f)		(g)	(h)	(i)	(j)	(k)	(l)	(m)	(n)	(o)	(p)	(q)	(r)
		00 73 04	SD-01 Preconstruction Submittals															
			Contractor Employee Base	1.12.1	G													
			Access Pass															
			Escort	1.12.6	G													
		01 11 00	SD-01 Preconstruction Submittals															
			Utility Outage Requests	1.8.1														
			Utility Connection Requests	1.8.1														
			Borrow Permits	1.8.2														
			Excavation Permits	1.8.2														
			Welding Permits	1.8.2														
		01 14 00	SD-01 Preconstruction Submittals															
			List of Contact Personnel	1.3.1.1	G													
			Personnel List	1.4.1	G													
			Vehicle List	1.4.2	G													
		01 20 00.00 20	SD-01 Preconstruction Submittals															
			Earned Value Report	1.3	G													
		01 30 00	SD-01 Preconstruction Submittals															
			View location map	1.3	G													
			Progress and completion pictures	1.4	G													
		01 32 17.00 20	SD-01 Preconstruction Submittals															
			Qualifications	1.5	G													
			Baseline Network Analysis	1.3	G													
			Schedule															
			SD-07 Certificates															
			Monthly Network Analysis	1.7.1	G													
			SD-11 Closeout Submittals															

SUBMITTAL REGISTER

CONTRACT NO.

TITLE AND LOCATION
Djibouti Fuel Storage Facility

CONTRACTOR

ACTIVITY NO	TRANSMITTAL NO	SPEC SECT	DESCRIPTION ITEM SUBMITTED	PARAGRAPH #	CLASSIFICATION	GOVT OR A/E REVWR	CONTRACTOR: SCHEDULE DATES			CONTRACTOR ACTION			APPROVING AUTHORITY					
							SUBMIT	APPROVAL NEEDED BY	MATERIAL NEEDED BY	ACTION CODE	DATE OF ACTION	DATE FWD TO APPR AUTH/ DATE RCD FROM CONTR	DATE FWD TO OTHER REVIEWER	DATE RCD FROM OTH REVIEWER	ACTION CODE	DATE OF ACTION	MAILED TO CONTR/ DATE RCD FRM APPR AUTH	REMARKS
(a)	(b)	(c)	(d)	(e)	(f)		(g)	(h)	(i)	(j)	(k)	(l)	(m)	(n)	(o)	(p)	(q)	(r)
		01 32 17.00 20	As-Built Schedule	1.7.2	G													
		01 33 00	SD-01 Preconstruction Submittals															
			Submittal Register	1.9	G													
		01 33 29	SD-01 Preconstruction Submittals															
			Preliminary Sustainability	1.5.2.1	G													
			Notebook															
			Preliminary High Performance	1.5.2.1														
			and Sustainable Building Checklist															
			SD-11 Closeout Submittals															
			Final Sustainability Notebook	1.5.2.1	G													
			Final High Performance and	1.5.2.1	G													
			Sustainable Building Checklist															
		01 35 26	SD-01 Preconstruction Submittals															
			Accident Prevention Plan (APP)	1.7	G													
			Activity Hazard Analysis (AHA)	1.8	G													
			Crane Critical Lift Plan	1.7.1	G													
			Crane Operators	1.6.1.3	G													
			SD-06 Test Reports															
			Notifications and Reports	1.12														
			Accident Reports	1.12.2	G													
			Crane Reports	1.12.3														
			SD-07 Certificates															
			Confined Space Entry Permit	1.9														
			Hot work permit	1.9														
			Contractor Safety Self-Evaluation	1.4	G													
			Checklist															

SUBMITTAL REGISTER

CONTRACT NO.

TITLE AND LOCATION
Djibouti Fuel Storage Facility

CONTRACTOR

ACTIVITY NO	TRANSMITTAL NO	SPEC SECT	DESCRIPTION ITEM SUBMITTED	PARAGRAPH #	CLASSIFICATION	GOVT OR A/E REVWR	CONTRACTOR: SCHEDULE DATES			CONTRACTOR ACTION			APPROVING AUTHORITY					
							SUBMIT	APPROVAL NEEDED BY	MATERIAL NEEDED BY	ACTION CODE	DATE OF ACTION	DATE FWD TO APPR AUTH/ DATE RCD FROM CONTR	DATE FWD TO OTHER REVIEWER	DATE RCD FROM OTH REVIEWER	ACTION CODE	DATE OF ACTION	MAILED TO CONTR/ DATE RCD FRM APPR AUTH	REMARKS
(a)	(b)	(c)	(d)	(e)	(f)		(g)	(h)	(i)	(j)	(k)	(l)	(m)	(n)	(o)	(p)	(q)	(r)
		01 35 26	Certificate of Compliance	1.12.4														
		01 35 29.13	SD-02 Shop Drawings															
			Work Zones	1.29.1	G													
			Decontamination Facilities	1.30.1	G													
			SD-03 Product Data															
			Exposure Monitoring/Air	1.12														
			Sampling Program															
			Site Control Log	1.29.2														
			Employee Certificates	1.11.4														
		01 45 00.00 20	SD-01 Preconstruction Submittals															
			Construction Quality Control (QC)	1.6.1	G													
			Plan															
			Indoor Air Quality (IAQ)	1.16	G													
			Management Plan															
			SD-07 Certificates															
			CA Resume	1.5.2.2														
			FPE Resume	1.5.7														
		01 50 00	SD-01 Preconstruction Submittals															
			Construction Site Plan	1.3	G													
			Traffic Control Plan	3.4.1	G													
			SD-03 Product Data															
			Backflow Preventers	1.4	G													
			SD-06 Test Reports															
			Backflow Preventer Tests	2.2.5														
			SD-07 Certificates															
			Backflow Tester	1.4.1														

SUBMITTAL REGISTER

CONTRACT NO.

TITLE AND LOCATION
Djibouti Fuel Storage Facility

CONTRACTOR

ACTIVITY NO	TRANSMITTAL NO	SPEC SECT	DESCRIPTION ITEM SUBMITTED	PARAGRAPH #	CLASSIFICATION	GOVT OR A/E REVWR	CONTRACTOR: SCHEDULE DATES			CONTRACTOR ACTION			APPROVING AUTHORITY				MAILED TO CONTR/ DATE RCD FRM APPR AUTH	REMARKS
							SUBMIT	APPROVAL NEEDED BY	MATERIAL NEEDED BY	ACTION CODE	DATE OF ACTION	DATE FWD TO APPR AUTH/ DATE RCD FROM CONTR	DATE FWD TO OTHER REVIEWER	DATE RCD FROM OTH REVIEWER	ACTION CODE	DATE OF ACTION		
(a)	(b)	(c)	(d)	(e)	(f)		(g)	(h)	(i)	(j)	(k)	(l)	(m)	(n)	(o)	(p)	(q)	(r)
		01 50 00	Backflow Preventers	1.4														
		01 57 19.00 20	SD-01 Preconstruction Submittals															
			Preconstruction Survey	1.5.1	G													
			Solid Waste Management Plan	3.3	G													
			and Permit															
			Environmental Protection Plan	1.6	G													
			Dirt and Dust Control Plan	3.12.1														
			SD-06 Test Reports															
			Contractor Hazardous Material	3.7.1														
			Inventory Log															
			Hazardous Waste/Debris	3.11.2														
			Management															
			Laboratory Analysis	3.11.2.2														
			SD-07 Certificates															
			Contractor 40 CFR employee	1.5.5	G													
			training records															
			ECATTS Certificate of	1.4.1														
			Completion															
			SD-11 Closeout Submittals															
			Waste Determination	3.4														
			Documentation															
			Solid Waste Management Permit	3.3														
			Regulatory Notifications	1.5.2														
		01 58 00	SD-02 Shop Drawings															
			Preliminary drawing indicating	1.3.1	G													
			layout and text content															

SUBMITTAL REGISTER

CONTRACT NO.

TITLE AND LOCATION
Djibouti Fuel Storage Facility

CONTRACTOR

ACTIVITY NO	TRANSMITTAL NO	SPEC SECT	DESCRIPTION ITEM SUBMITTED	PARAGRAPH #	CLASSIFICATION	GOVT OR A/E REVWR	CONTRACTOR: SCHEDULE DATES			CONTRACTOR ACTION			APPROVING AUTHORITY				MAILED TO CONTR/	REMARKS
							SUBMIT	APPROVAL NEEDED BY	MATERIAL NEEDED BY	ACTION CODE	DATE OF ACTION	DATE FWD TO APPR AUTH/ DATE RCD FROM CONTR	DATE FWD TO OTHER REVIEWER	DATE RCD FROM OTH REVIEWER	ACTION CODE	DATE OF ACTION	DATE RCD FRM APPR AUTH	
(a)	(b)	(c)	(d)	(e)	(f)		(g)	(h)	(i)	(j)	(k)	(l)	(m)	(n)	(o)	(p)	(q)	(r)
		01 74 19	SD-01 Preconstruction Submittals															
			Waste Management Plan	1.6	G													
			SD-11 Closeout Submittals															
			Records	1.7														
		01 78 00	SD-03 Product Data															
			Warranty Management Plan	1.6.1														
			Warranty Tags	1.6.4														
			Final Cleaning	3.4														
			Spare Parts Data	1.5														
			SD-08 Manufacturer's Instructions															
			Preventative Maintenance	3.5														
			Condition Monitoring (Predictive	3.5														
			Testing)															
			Inspection	3.5														
			Instructions	1.6.1														
			SD-10 Operation and Maintenance															
			Data															
			Operation and Maintenance	3.3	G													
			Manuals															
			SD-11 Closeout Submittals															
			As-Built Drawings	3.1	G													
			Record Drawings	3.2	G													
			Interim DD FORM 1354	3.6	G													
			Checklist for DD FORM 1354	3.6	G													
			NAVFAC Sustainable & Energy	3.7	G													
			Data Record Card															

SUBMITTAL REGISTER

CONTRACT NO.

TITLE AND LOCATION
Djibouti Fuel Storage Facility

CONTRACTOR

ACTIVITY NO	TRANSMITTAL NO	SPEC SECT	DESCRIPTION ITEM SUBMITTED	PARAGRAPH #	CLASSIFICATION	GOVT OR A/E REVWR	CONTRACTOR: SCHEDULE DATES			CONTRACTOR ACTION			APPROVING AUTHORITY					
							SUBMIT	APPROVAL NEEDED BY	MATERIAL NEEDED BY	ACTION CODE	DATE OF ACTION	DATE FWD TO APPR AUTH/ DATE RCD FROM CONTR	DATE FWD TO OTHER REVIEWER	DATE RCD FROM OTH REVIEWER	ACTION CODE	DATE OF ACTION	MAILED TO CONTR/ DATE RCD FRM APPR AUTH	REMARKS
(a)	(b)	(c)	(d)	(e)	(f)		(g)	(h)	(i)	(j)	(k)	(l)	(m)	(n)	(o)	(p)	(q)	(r)
		01 78 23.33	SD-10 Operation and Maintenance															
			Data															
			System Instructions	2.1.1	G													
		02 41 00	SD-01 Preconstruction Submittals															
			Demolition Plan	1.2.1	G													
			Existing Conditions	1.10														
			SD-07 Certificates															
			Notification	1.6	G													
			SD-11 Closeout Submittals															
			Receipts	3.3.3														
		02 56 13	SD-02 Shop Drawings															
			Penetrations	3.8	G													
			SD-03 Product Data															
			Materials	2.1	G													
			Field Seaming	3.3	G													
			Qualifications	1.4.1	G													
			SD-04 Samples															
			Samples	3.4	G													
			SD-06 Test Reports															
			Surface Preparation	3.1.1	G													
			Non-Destructive Field Seam	3.5.1	G													
			Continuity Testing															
			Destructive Field Seam Testing	3.5.2	G													
			Destructive Seam Test Repairs	3.6.1	G													
			Tests	3.5	G													
			SD-07 Certificates															

SUBMITTAL REGISTER

CONTRACT NO.

TITLE AND LOCATION
Djibouti Fuel Storage Facility

CONTRACTOR

ACTIVITY NO	TRANSMITTAL NO	SPEC SECT	DESCRIPTION ITEM SUBMITTED	PARAGRAPH #	CLASSIFICATION	GOVT OR A/E REVWR	CONTRACTOR: SCHEDULE DATES			CONTRACTOR ACTION			APPROVING AUTHORITY					
							SUBMIT	APPROVAL NEEDED BY	MATERIAL NEEDED BY	ACTION CODE	DATE OF ACTION	DATE FWD TO APPR AUTH/ DATE RCD FROM CONTR	DATE FWD TO OTHER REVIEWER	DATE RCD FROM OTH REVIEWER	ACTION CODE	DATE OF ACTION	MAILED TO CONTR/ DATE RCD FRM APPR AUTH	REMARKS
(a)	(b)	(c)	(d)	(e)	(f)		(g)	(h)	(i)	(j)	(k)	(l)	(m)	(n)	(o)	(p)	(q)	(r)
		02 56 13	Samples	3.4	G													
			Materials	2.1	G													
			Surface Preparation	3.1.1	G													
			Destructive Field Seam Testing	3.5.2	G													
			Destructive Seam Test Repairs	3.6.1	G													
			Tests	3.5	G													
		02 61 13	SD-02 Shop Drawings															
			Surveys	3.1														
			SD-03 Product Data															
			Work Plan	1.3	G													
			Closure Report	3.10	G													
			SD-06 Test Reports															
			Surveys	3.1														
			Confirmation Sampling and	3.4														
			Analysis															
			Sampling of Stored Material	3.6.1	G													
			Sampling Liquid	3.6.2	G													
		03 11 19.00 10	SD-03 Product Data															
			Insulating Concrete Form	2.1.2	G													
			Environmental Data	1.6.1	S													
			Accessories	2.4	G													
			SD-06 Test Reports															
			ICC ES Evaluation Report	1.3.1														
			SD-07 Certificates															
			3rd Party Agency Certification	2.3	G													
			SD-08 Manufacturer’s Instructions															

SUBMITTAL REGISTER

CONTRACT NO.

TITLE AND LOCATION
Djibouti Fuel Storage Facility

CONTRACTOR

ACTIVITY NO	TRANSMITTAL NO	SPEC SECT	DESCRIPTION ITEM SUBMITTED	PARAGRAPH #	CLASSIFICATION	GOVT OR A/E REVWR	CONTRACTOR: SCHEDULE DATES			CONTRACTOR ACTION			APPROVING AUTHORITY					
							SUBMIT	APPROVAL NEEDED BY	MATERIAL NEEDED BY	ACTION CODE	DATE OF ACTION	DATE FWD TO APPR AUTH/ DATE RCD FROM CONTR	DATE FWD TO OTHER REVIEWER	DATE RCD FROM OTH REVIEWER	ACTION CODE	DATE OF ACTION	MAILED TO CONTR/ DATE RCD FRM APPR AUTH	REMARKS
(a)	(b)	(c)	(d)	(e)	(f)		(g)	(h)	(i)	(j)	(k)	(l)	(m)	(n)	(o)	(p)	(q)	(r)
		03 11 19.00 10	Installation	3.3	G													
			SD-10 Operation and Maintenance															
			Data															
			Plastic Identification	1.6.2														
		03 30 00	SD-01 Preconstruction Submittals															
			Quality Control Plan	1.6.5	G													
			Quality Control Personnel	1.6.6	G													
			Certifications															
			Quality Control Organizational	1.6.6														
			Chart															
			Laboratory Accreditation	1.6.8	G													
			SD-02 Shop Drawings															
			Reinforcing steel	1.6.2.1	G													
			SD-03 Product Data															
			Joint sealants	2.4.8														
			Joint filler	2.4.7														
			Materials for Forms	2.1														
			Recycled Aggregate Materials	2.4.3.1														
			Cementitious Materials	2.4.1														
			Vapor barrier	2.4.6														
			Concrete Curing Materials	2.3.3														
			Reinforcement	2.5														
			Liquid Chemical Floor Hardener	2.6.1														
			Admixtures	2.4.5														
			Waterstops	2.2.1														
			Local/Regional Materials	1.8.1														

SUBMITTAL REGISTER

CONTRACT NO.

TITLE AND LOCATION
Djibouti Fuel Storage Facility

CONTRACTOR

ACTIVITY NO	TRANSMITTAL NO	SPEC SECT	DESCRIPTION ITEM SUBMITTED	PARAGRAPH #	CLASSIFICATION	GOVT OR A/E REVWR	CONTRACTOR: SCHEDULE DATES			CONTRACTOR ACTION			APPROVING AUTHORITY					
							SUBMIT	APPROVAL NEEDED BY	MATERIAL NEEDED BY	ACTION CODE	DATE OF ACTION	DATE FWD TO APPR AUTH/ DATE RCD FROM CONTR	DATE FWD TO OTHER REVIEWER	DATE RCD FROM OTH REVIEWER	ACTION CODE	DATE OF ACTION	MAILED TO CONTR/ DATE RCD FRM APPR AUTH	REMARKS
(a)	(b)	(c)	(d)	(e)	(f)		(g)	(h)	(i)	(j)	(k)	(l)	(m)	(n)	(o)	(p)	(q)	(r)
		03 30 00	Biodegradable Form Release	2.4.9														
			Agent															
			Pumping Concrete	1.6.3.1														
			SD-05 Design Data															
			mix design	2.3.1	G													
			SD-06 Test Reports															
			Concrete mix design	1.6.1.1	G													
			Fly ash	1.6.4.1														
			Pozzolan	1.6.4.1														
			Ground granulated blast-furnace	1.6.4.2														
			slag															
			Aggregates	2.4.3														
			Compressive strength tests	3.13.2.3	G													
			Ion concentration	3.13.2.5														
			Air Content	3.13.2.4	G													
			Slump Tests	3.13.2.1	G													
			Water	2.4.2														
			SD-07 Certificates															
			Reinforcing Bars	2.5.1														
			VOC Content for form release	1.6.3.2														
			agents, curing compounds, and															
			concrete penetrating sealers															
			Material Safety Data Sheets	1.6.3.3														
			Field Testing Technician and	1.6.6.2														
			Testing Agency															
			SD-08 Manufacturer’s Instructions															

SUBMITTAL REGISTER

CONTRACT NO.

TITLE AND LOCATION
Djibouti Fuel Storage Facility

CONTRACTOR

ACTIVITY NO	TRANSMITTAL NO	SPEC SECT	DESCRIPTION ITEM SUBMITTED	PARAGRAPH #	CLASSIFICATION	GOVT OR A/E REVWR	CONTRACTOR: SCHEDULE DATES			CONTRACTOR ACTION			APPROVING AUTHORITY					
							SUBMIT	APPROVAL NEEDED BY	MATERIAL NEEDED BY	ACTION CODE	DATE OF ACTION	DATE FWD TO APPR AUTH/ DATE RCD FROM CONTR	DATE FWD TO OTHER REVIEWER	DATE RCD FROM OTH REVIEWER	ACTION CODE	DATE OF ACTION	MAILED TO CONTR/ DATE RCD FRM APPR AUTH	REMARKS
(a)	(b)	(c)	(d)	(e)	(f)		(g)	(h)	(i)	(j)	(k)	(l)	(m)	(n)	(o)	(p)	(q)	(r)
		03 30 00	Liquid Chemical Floor Hardener	2.6.1														
			Curing Compound	2.3.3														
		05 12 00	SD-02 Shop Drawings															
			Fabrication drawings	1.3.2	G													
			SD-03 Product Data															
			Welding electrodes and rods	2.4.1														
			Non-Shrink Grout	2.4.2	G													
			SD-06 Test Reports															
			Bolts, nuts, and washers	2.3														
			Bolt Testing Reports	3.6.2.1														
			Embrittlement Test Reports	3.6.3														
			SD-07 Certificates															
			Steel	2.2														
			Bolts, nuts, and washers	2.3														
			Galvanizing	2.5														
			Welding procedures and	1.3.3.1														
			qualifications															
			Welding electrodes and rods	2.4.1														
		05 21 00	SD-01 Preconstruction Submittals															
			Welder Qualification	1.3.2														
			SD-02 Shop Drawings															
			Steel Joist Framing	1.3.1	G													
			SD-05 Design Data															
			Design Calculations	2.2	G													
			SD-06 Test Reports															
			Erection Inspection	3.4														

SUBMITTAL REGISTER

CONTRACT NO.

TITLE AND LOCATION
Djibouti Fuel Storage Facility

CONTRACTOR

ACTIVITY NO	TRANSMITTAL NO	SPEC SECT	DESCRIPTION ITEM SUBMITTED	PARAGRAPH #	CLASSIFICATION	GOVT OR A/E REVWR	CONTRACTOR: SCHEDULE DATES			CONTRACTOR ACTION			APPROVING AUTHORITY					
							SUBMIT	APPROVAL NEEDED BY	MATERIAL NEEDED BY	ACTION CODE	DATE OF ACTION	DATE FWD TO APPR AUTH/ DATE RCD FROM CONTR	DATE FWD TO OTHER REVIEWER	DATE RCD FROM OTH REVIEWER	ACTION CODE	DATE OF ACTION	MAILED TO CONTR/ DATE RCD FRM APPR AUTH	REMARKS
(a)	(b)	(c)	(d)	(e)	(f)		(g)	(h)	(i)	(j)	(k)	(l)	(m)	(n)	(o)	(p)	(q)	(r)
		05 21 00	Welding Inspections	3.4														
			SD-07 Certificates															
			Certification of Compliance	1.3.2														
		05 30 00	SD-02 Shop Drawings															
			Fabrication Drawings	1.3.4	G													
			SD-03 Product Data															
			Accessories	2.2														
			Deck Units	2.1														
			Touch-up Paint	2.1.4														
			Welding Equipment	1.3.2														
			Welding Rods and Accessories	1.3.2														
			SD-05 Design Data															
			Deck Units	2.1	G													
			SD-07 Certificates															
			Welder Qualifications	1.3.2														
			Welding Procedures	1.3.2														
			Manufacturer's Certificate	1.3.1														
		05 50 13	SD-02 Shop Drawings															
			Floor gratings	2.4	G													
			angles and plates	2.6	G													
			Roof hatch	3.7	G													
			SD-03 Product Data															
			Floor gratings	2.4														
			Roof hatch	3.7														
		05 51 33	SD-02 Shop Drawings															
			Ladders	2.3														

SUBMITTAL REGISTER

CONTRACT NO.

TITLE AND LOCATION
Djibouti Fuel Storage Facility

CONTRACTOR

ACTIVITY NO	TRANSMITTAL NO	SPEC SECT	DESCRIPTION ITEM SUBMITTED	PARAGRAPH #	CLASSIFICATION	GOVT OR A/E REVWR	CONTRACTOR: SCHEDULE DATES			CONTRACTOR ACTION			APPROVING AUTHORITY					
							SUBMIT	APPROVAL NEEDED BY	MATERIAL NEEDED BY	ACTION CODE	DATE OF ACTION	DATE FWD TO APPR AUTH/ DATE RCD FROM CONTR	DATE FWD TO OTHER REVIEWER	DATE RCD FROM OTH REVIEWER	ACTION CODE	DATE OF ACTION	MAILED TO CONTR/ DATE RCD FRM APPR AUTH	REMARKS
(a)	(b)	(c)	(d)	(e)	(f)		(g)	(h)	(i)	(j)	(k)	(l)	(m)	(n)	(o)	(p)	(q)	(r)
		05 51 33	SD-03 Product Data															
			Ladders	2.3														
		05 52 00	SD-02 Shop Drawings															
			Fabrication Drawings	1.2.1	G													
			Iron and Steel Hardware	2.1	G													
			Steel Shapes, Plates, Bars and	2.1	G													
			Strips															
			SD-03 Product Data															
			Structural Steel Plates, Shapes,	2.3	G													
			and Bars															
			Structural Steel Tubing	2.4	G													
			Cold-Drawn Steel Tubing	2.7	G													
			Concrete Inserts	2.9	G													
			Protective Coating	2.11	G													
			Steel Railings and Handrails	2.12	G													
			Anchorage and Fastening	1.2.1	G													
			Systems															
			SD-07 Certificates															
			Welder Qualification	1.4.1	G													
			SD-08 Manufacturer’s Instructions															
			Installation Instructions	3.1	G													
		05 59 10	SD-01 Preconstruction Submittals															
			Assembly Tests	2.6.2	G													
			Acceptance Testing	3.3	G													
			SD-02 Shop Drawings															
			Detail Drawings	1.4.3	G													

SUBMITTAL REGISTER

CONTRACT NO.

TITLE AND LOCATION
Djibouti Fuel Storage Facility

CONTRACTOR

ACTIVITY NO	TRANSMITTAL NO	SPEC SECT	DESCRIPTION ITEM SUBMITTED	PARAGRAPH #	CLASSIFICATION	GOVT OR A/E REVWR	CONTRACTOR: SCHEDULE DATES			CONTRACTOR ACTION			APPROVING AUTHORITY					
							SUBMIT	APPROVAL NEEDED BY	MATERIAL NEEDED BY	ACTION CODE	DATE OF ACTION	DATE FWD TO APPR AUTH/ DATE RCD FROM CONTR	DATE FWD TO OTHER REVIEWER	DATE RCD FROM OTH REVIEWER	ACTION CODE	DATE OF ACTION	MAILED TO CONTR/ DATE RCD FRM APPR AUTH	REMARKS
(a)	(b)	(c)	(d)	(e)	(f)		(g)	(h)	(i)	(j)	(k)	(l)	(m)	(n)	(o)	(p)	(q)	(r)
		05 59 10	SD-03 Product Data															
			Wheel Assemblies	2.1.7	G													
			Materials List	1.4.3	G													
			Welding	2.4	G													
			Welding of Aluminum	2.4.2	G													
			Steel Welding Repairs	2.4.4	G													
			SD-07 Certificates															
			Welder Qualifications	1.4.1														
			Welding of Aluminum	2.4.2														
		05 72 00	SD-02 Shop Drawings															
			Ornamental Metal Items	1.3.1	G													
			Installation Drawings	2.1	G													
			Shop and Field Connections	2.1	G													
			Construction Details	2.1	G													
			SD-03 Product Data															
			Materials	2.2	G													
			Fabrication	2.3	G													
			SD-04 Samples															
			Manufacturer's Standard Color	1.3.1	G													
			Charts															
			Aluminum Finishes	2.3.6	G													
			Architectural Metal Items	2.3.6	G													
		06 41 16.00 10	SD-02 Shop Drawings															
			Shop Drawings	2.10	G													
			SD-03 Product Data															
			Wood Materials	2.1	G													

SUBMITTAL REGISTER

CONTRACT NO.

TITLE AND LOCATION
Djibouti Fuel Storage Facility

CONTRACTOR

ACTIVITY NO	TRANSMITTAL NO	SPEC SECT	DESCRIPTION ITEM SUBMITTED	PARAGRAPH #	CLASSIFICATION	GOVT OR A/E REVWR	CONTRACTOR: SCHEDULE DATES			CONTRACTOR ACTION			APPROVING AUTHORITY				MAILED TO CONTR/ DATE RCD FRM APPR AUTH	REMARKS
							SUBMIT	APPROVAL NEEDED BY	MATERIAL NEEDED BY	ACTION CODE	DATE OF ACTION	DATE FWD TO APPR AUTH/ DATE RCD FROM CONTR	DATE FWD TO OTHER REVIEWER	DATE RCD FROM OTH REVIEWER	ACTION CODE	DATE OF ACTION		
(a)	(b)	(c)	(d)	(e)	(f)		(g)	(h)	(i)	(j)	(k)	(l)	(m)	(n)	(o)	(p)	(q)	(r)
		06 41 16.00 10	Finish Schedule	1.2	G													
			Certification	1.5.2	G													
			SD-04 Samples															
			Plastic Laminates	2.3	G													
			Cabinet Hardware	2.6	G													
			SD-07 Certificates															
			Quality Assurance	1.5	G													
			Laminate Clad Casework	3.1	G													
			SD-11 Closeout Submittals															
			LEED Documentation	1.3	S													
		06 61 16	SD-02 Shop Drawings															
			Detail Drawings	1.5.2	G													
			Installation	3.1	G													
			SD-03 Product Data															
			Solid polymer material	2.1	G													
			Certification	1.5.3	G													
			VOC Content	1.5.3	G													
			SD-04 Samples															
			Material	2.1	G													
			Counter and Vanity Tops	2.3.5	G													
			SD-10 Operation and Maintenance															
			Data															
			Clean-up	3.2	G													
			SD-11 Closeout Submittals															
			LEED Documentation	1.3	S													
		07 12 00	SD-03 Product Data															

SUBMITTAL REGISTER

CONTRACT NO.

TITLE AND LOCATION
Djibouti Fuel Storage Facility

CONTRACTOR

ACTIVITY NO	TRANSMITTAL NO	SPEC SECT	DESCRIPTION ITEM SUBMITTED	PARAGRAPH #	CLASSIFICATION	GOVT OR A/E REVWR	CONTRACTOR: SCHEDULE DATES			CONTRACTOR ACTION			APPROVING AUTHORITY					
							SUBMIT	APPROVAL NEEDED BY	MATERIAL NEEDED BY	ACTION CODE	DATE OF ACTION	DATE FWD TO APPR AUTH/ DATE RCD FROM CONTR	DATE FWD TO OTHER REVIEWER	DATE RCD FROM OTH REVIEWER	ACTION CODE	DATE OF ACTION	MAILED TO CONTR/ DATE RCD FRM APPR AUTH	REMARKS
(a)	(b)	(c)	(d)	(e)	(f)		(g)	(h)	(i)	(j)	(k)	(l)	(m)	(n)	(o)	(p)	(q)	(r)
		07 12 00	Protection board	2.6														
			Membrane fabric	2.3														
			Reinforcing Fabric	3.3.2.2														
			SD-08 Manufacturer's Instructions															
			Application	3.3														
		07 21 13	SD-03 Product Data															
			Block or board insulation	2.1	G													
			Vapor retarder	2.2														
			Pressure sensitive tape	2.3														
			Protection board or coating	2.4														
			Accessories	2.5														
			Certification	1.3														
			SD-08 Manufacturer's Instructions															
			Block or Board Insulation	2.1														
			Adhesive	2.5.1														
		07 21 16	SD-03 Product Data															
			Blanket insulation	2.1	G													
			Vapor retarder	2.2	G													
			Pressure sensitive tape	2.3	G													
			Accessories	2.4	G													
			Certification	1.3														
			SD-08 Manufacturer's Instructions															
			Insulation	3.3.1														
		07 22 00	SD-02 Shop Drawings															
			Wood nailers	2.4														
			SD-03 Product Data															

SUBMITTAL REGISTER

CONTRACT NO.

TITLE AND LOCATION
Djibouti Fuel Storage Facility

CONTRACTOR

ACTIVITY NO	TRANSMITTAL NO	SPEC SECT	DESCRIPTION ITEM SUBMITTED	PARAGRAPH #	CLASSIFICATION	GOVT OR A/E REVWR	CONTRACTOR: SCHEDULE DATES			CONTRACTOR ACTION			APPROVING AUTHORITY					
							SUBMIT	APPROVAL NEEDED BY	MATERIAL NEEDED BY	ACTION CODE	DATE OF ACTION	DATE FWD TO APPR AUTH/ DATE RCD FROM CONTR	DATE FWD TO OTHER REVIEWER	DATE RCD FROM OTH REVIEWER	ACTION CODE	DATE OF ACTION	MAILED TO CONTR/ DATE RCD FRM APPR AUTH	REMARKS
(a)	(b)	(c)	(d)	(e)	(f)		(g)	(h)	(i)	(j)	(k)	(l)	(m)	(n)	(o)	(p)	(q)	(r)
		07 22 00	Fasteners	2.3	G													
			Insulation	2.1	G													
			Certification	1.4.2														
			Recycled materials	2.1.2														
			SD-06 Test Reports															
			Flame spread and smoke	1.4.1														
			developed ratings															
			SD-07 Certificates															
			qualifications	1.3														
			SD-08 Manufacturer’s Instructions															
			fasteners	2.3														
			insulation	2.1														
		07 53 23	SD-02 Shop Drawings															
			Roof Plan Drawing	1.3.1														
			Wind Load Calculations	1.3.1														
			Boundaries of Enhanced	1.3.1														
			Perimeter															
			Corner Attachments of Roof	1.3.1														
			System Components															
			Location of Perimeter Half-Sheets	1.3.1														
			Spacing of Perimeter, Corner,	1.3.1														
			and Infield Fasteners															
			Slopes and Drain Locations	1.3.1														
			SD-03 Product Data															
			Cement	2.2														
			EPDM Sheet	2.1.1	G													

SUBMITTAL REGISTER

CONTRACT NO.

TITLE AND LOCATION
Djibouti Fuel Storage Facility

CONTRACTOR

ACTIVITY NO	TRANSMITTAL NO	SPEC SECT	DESCRIPTION ITEM SUBMITTED	PARAGRAPH #	CLASSIFICATION	GOVT OR A/E REVWR	CONTRACTOR: SCHEDULE DATES			CONTRACTOR ACTION			APPROVING AUTHORITY				MAILED TO CONTR/	
							SUBMIT	APPROVAL NEEDED BY	MATERIAL NEEDED BY	ACTION CODE	DATE OF ACTION	DATE FWD TO APPR AUTH/ DATE RCD FROM CONTR	DATE FWD TO OTHER REVIEWER	DATE RCD FROM OTH REVIEWER	ACTION CODE	DATE OF ACTION	DATE RCD FRM APPR AUTH	REMARKS
(a)	(b)	(c)	(d)	(e)	(f)		(g)	(h)	(i)	(j)	(k)	(l)	(m)	(n)	(o)	(p)	(q)	(r)
		07 53 23	Seam Tape	2.1.2														
			Bonding Adhesive	2.1.4														
			Lap Splice Adhesive	2.1.3														
			Water Cutoff Mastic/Water Block	2.1.6														
			Lap Cleaner, Lap Sealant, and	2.1.5														
			Edge Treatment															
			Flashings	3.3														
			Flashing Accessories	2.1.7														
			Flashing Tape	2.1.7.1														
			Fasteners and Plates	2.1.8														
			Roof Insulation	2.1.10														
			Pre-Manufactured Accessories	2.1.9														
			warranty	1.8	G													
			SD-05 Design Data															
			Wind Uplift Calculations	1.4.4	G													
			SD-07 Certificates															
			Qualification of Manufacturer	1.4.1														
			Qualification of Applicator	1.4.2														
			Wind Uplift Resistance	1.4.4	G													
			Fire Resistance	1.4.3	G													
			SD-08 Manufacturer's Instructions															
			Application	3.2	G													
			Application Method	3.2.3	G													
			Membrane Flashing	3.3.2	G													
			Seam Tape	2.1.2														
			Tape Seams / Lap Splices	3.2.4														

SUBMITTAL REGISTER

CONTRACT NO.

TITLE AND LOCATION
Djibouti Fuel Storage Facility

CONTRACTOR

ACTIVITY NO	TRANSMITTAL NO	SPEC SECT	DESCRIPTION ITEM SUBMITTED	PARAGRAPH #	CLASSIFICATION	GOVT OR A/E REVWR	CONTRACTOR: SCHEDULE DATES			CONTRACTOR ACTION			APPROVING AUTHORITY				MAILED TO CONTR/	
							SUBMIT	APPROVAL NEEDED BY	MATERIAL NEEDED BY	ACTION CODE	DATE OF ACTION	DATE FWD TO APPR AUTH/ DATE RCD FROM CONTR	DATE FWD TO OTHER REVIEWER	DATE RCD FROM OTH REVIEWER	ACTION CODE	DATE OF ACTION	DATE RCD FRM APPR AUTH	REMARKS
(a)	(b)	(c)	(d)	(e)	(f)		(g)	(h)	(i)	(j)	(k)	(l)	(m)	(n)	(o)	(p)	(q)	(r)
		07 53 23	Adhesive Seams / Lap Splices	3.2.5														
			Perimeter Attachment	3.2.6														
			Primer	3.2.4														
			Fasteners	3.2.7														
			SD-11 Closeout Submittals															
			Warranty	1.8														
			Information Card	3.9														
			Instructions To Government	3.8														
			Personnel															
		07 60 00	SD-02 Shop Drawings															
			Covering on flat, sloped, or	3.1.14	G													
			curved surfaces															
			Gutters	3.1.12	G													
			Downspouts	3.1.13	G													
			Gravel stops and fascias	3.1.10	G													
			Counterflashing	3.1.8	G													
			Flashing at roof penetrations	3.1.15	G													
			Reglets	3.1.9	G													
			Drip edge	3.1.11	G													
			SD-11 Closeout Submittals															
			Quality Control Plan	3.5														
		07 61 14.00 20	SD-02 Shop Drawings															
			Roofing	1.2.5	G													
			SD-03 Product Data															
			Roofing panels	2.1	G													
			Attachment clips	2.2	G													

SUBMITTAL REGISTER

CONTRACT NO.

TITLE AND LOCATION
Djibouti Fuel Storage Facility

CONTRACTOR

ACTIVITY NO	TRANSMITTAL NO	SPEC SECT	DESCRIPTION ITEM SUBMITTED	PARAGRAPH #	CLASSIFICATION	GOVT OR A/E REVWR	CONTRACTOR: SCHEDULE DATES			CONTRACTOR ACTION			APPROVING AUTHORITY					
							SUBMIT	APPROVAL NEEDED BY	MATERIAL NEEDED BY	ACTION CODE	DATE OF ACTION	DATE FWD TO APPR AUTH/ DATE RCD FROM CONTR	DATE FWD TO OTHER REVIEWER	DATE RCD FROM OTH REVIEWER	ACTION CODE	DATE OF ACTION	MAILED TO CONTR/ DATE RCD FRM APPR AUTH	REMARKS
(a)	(b)	(c)	(d)	(e)	(f)		(g)	(h)	(i)	(j)	(k)	(l)	(m)	(n)	(o)	(p)	(q)	(r)
		07 61 14.00 20	Closures	2.3.1	G													
			Accessories	2.3	G													
			Fasteners	2.3.2	G													
			Sealants	2.3.3	G													
			warranty	1.7	G													
			SD-04 Samples															
			panel	2.1														
			SD-05 Design Data															
			Design calculations	1.5														
			SD-06 Test Reports															
			Structural performance	1.3.3														
			Finish	1.6.6														
			SD-07 Certificates															
			Installer's Qualifications	1.6.4														
			Coil stock	2.1	G													
			SD-08 Manufacturer’s Instructions															
			Installation	3.3	G													
			SD-11 Closeout Submittals															
			Information card	3.7														
		07 84 00	SD-02 Shop Drawings															
			Firestopping Materials	2.1	G													
			SD-06 Test Reports															
			Inspection	3.3	G													
		07 92 00	SD-03 Product Data															
			Sealants	2.1	G													
			Primers	2.2	G													

SUBMITTAL REGISTER

CONTRACT NO.

TITLE AND LOCATION
Djibouti Fuel Storage Facility

CONTRACTOR

ACTIVITY NO	TRANSMITTAL NO	SPEC SECT	DESCRIPTION ITEM SUBMITTED	PARAGRAPH #	CLASSIFICATION	GOVT OR A/E REVWR	CONTRACTOR: SCHEDULE DATES			CONTRACTOR ACTION			APPROVING AUTHORITY					
							SUBMIT	APPROVAL NEEDED BY	MATERIAL NEEDED BY	ACTION CODE	DATE OF ACTION	DATE FWD TO APPR AUTH/ DATE RCD FROM CONTR	DATE FWD TO OTHER REVIEWER	DATE RCD FROM OTH REVIEWER	ACTION CODE	DATE OF ACTION	MAILED TO CONTR/ DATE RCD FRM APPR AUTH	REMARKS
(a)	(b)	(c)	(d)	(e)	(f)		(g)	(h)	(i)	(j)	(k)	(l)	(m)	(n)	(o)	(p)	(q)	(r)
		07 92 00	Bond breakers	2.3														
			Backstops	2.4														
			SD-07 Certificates															
			Sealant	3.3.6	G													
		08 11 13	SD-02 Shop Drawings															
			Doors	2.1	G													
			Doors	2.1	G													
			Frames	2.3	G													
			Frames	2.3	G													
			Accessories	2.2														
			SD-03 Product Data															
			Doors	2.1	G													
			Frames	2.3	G													
			Accessories	2.2														
		08 11 16	SD-02 Shop Drawings															
			Doors, windows and frames	1.5.1	G													
			SD-04 Samples															
			Finish sample	1.5.2.1														
			SD-05 Design Data															
			Standard Airblast Test	1.2.3.3														
			calculations	1.2.2	G													
			SD-08 Manufacturer's Instructions															
			Doors and frames	2.1														
		08 34 19.10 20	SD-02 Shop Drawings															
			Rolling fire doors	2.5	G													
			SD-03 Product Data															

SUBMITTAL REGISTER

CONTRACT NO.

TITLE AND LOCATION
Djibouti Fuel Storage Facility

CONTRACTOR

ACTIVITY NO	TRANSMITTAL NO	SPEC SECT	DESCRIPTION ITEM SUBMITTED	PARAGRAPH #	CLASSIFICATION	GOVT OR A/E REVWR	CONTRACTOR: SCHEDULE DATES			CONTRACTOR ACTION			APPROVING AUTHORITY					
							SUBMIT	APPROVAL NEEDED BY	MATERIAL NEEDED BY	ACTION CODE	DATE OF ACTION	DATE FWD TO APPR AUTH/ DATE RCD FROM CONTR	DATE FWD TO OTHER REVIEWER	DATE RCD FROM OTH REVIEWER	ACTION CODE	DATE OF ACTION	MAILED TO CONTR/ DATE RCD FRM APPR AUTH	REMARKS
(a)	(b)	(c)	(d)	(e)	(f)		(g)	(h)	(i)	(j)	(k)	(l)	(m)	(n)	(o)	(p)	(q)	(r)
		08 34 19.10 20	Rolling fire doors	2.5	G													
			SD-08 Manufacturer's Instructions															
			Rolling fire doors	2.5														
			SD-10 Operation and Maintenance															
			Data															
			Rolling fire doors	2.5														
		08 51 13	SD-02 Shop Drawings															
			Windows	2.1	G													
			Fabrication Drawings	1.10														
			SD-03 Product Data															
			Windows	2.1	G													
			Hardware	2.2.8.1	G													
			Fasteners	2.2.3	G													
			Window performance	1.11	G													
			Thermal-Barrier Windows	2.3	G													
			Accessories	2.2.8	G													
			Adhesives	2.2.4														
			Thermal performance	1.11.5														
			Environmental Data	1.7.1														
			SD-04 Samples															
			Finish Sample	1.4.2.1														
			SD-05 Design Data															
			Structural calculations for	2.1	G													
			deflection															
			Design Analysis	1.4.3	G													
			SD-06 Test Reports															

SUBMITTAL REGISTER

CONTRACT NO.

TITLE AND LOCATION
Djibouti Fuel Storage Facility

CONTRACTOR

ACTIVITY NO	TRANSMITTAL NO	SPEC SECT	DESCRIPTION ITEM SUBMITTED	PARAGRAPH #	CLASSIFICATION	GOVT OR A/E REVWR	CONTRACTOR: SCHEDULE DATES			CONTRACTOR ACTION			APPROVING AUTHORITY					
							SUBMIT	APPROVAL NEEDED BY	MATERIAL NEEDED BY	ACTION CODE	DATE OF ACTION	DATE FWD TO APPR AUTH/ DATE RCD FROM CONTR	DATE FWD TO OTHER REVIEWER	DATE RCD FROM OTH REVIEWER	ACTION CODE	DATE OF ACTION	MAILED TO CONTR/ DATE RCD FRM APPR AUTH	REMARKS
(a)	(b)	(c)	(d)	(e)	(f)		(g)	(h)	(i)	(j)	(k)	(l)	(m)	(n)	(o)	(p)	(q)	(r)
		08 51 13	Minimum condensation	1.4.4														
			resistance factor															
			Standard Airblast Test	1.11.2.3														
			SD-10 Operation and Maintenance															
			Data															
			Windows	2.1	G													
		08 71 00	SD-02 Shop Drawings															
			Hardware schedule	1.3	G													
			Keying system	2.3.6	G													
			SD-03 Product Data															
			Hardware items	2.3	G													
			SD-08 Manufacturer's Instructions															
			Installation	3.1														
			SD-10 Operation and Maintenance															
			Data															
			Hardware Schedule	1.3	G													
			SD-11 Closeout Submittals															
			Key Bitting	1.4														
		08 81 00	SD-03 Product Data															
			Insulating Glass	1.7.1	G													
			Glazing Accessories	1.3	G													
			Environmental Data	1.6.1														
			SD-04 Samples															
			Insulating Glass	1.7.1														
			Tape	2.3.4														
			Sealant	2.3.1.1														

SUBMITTAL REGISTER

CONTRACT NO.

TITLE AND LOCATION
Djibouti Fuel Storage Facility

CONTRACTOR

ACTIVITY NO	TRANSMITTAL NO	SPEC SECT	DESCRIPTION ITEM SUBMITTED	PARAGRAPH #	CLASSIFICATION	GOVT OR A/E REVWR	CONTRACTOR: SCHEDULE DATES			CONTRACTOR ACTION			APPROVING AUTHORITY					
							SUBMIT	APPROVAL NEEDED BY	MATERIAL NEEDED BY	ACTION CODE	DATE OF ACTION	DATE FWD TO APPR AUTH/ DATE RCD FROM CONTR	DATE FWD TO OTHER REVIEWER	DATE RCD FROM OTH REVIEWER	ACTION CODE	DATE OF ACTION	MAILED TO CONTR/ DATE RCD FRM APPR AUTH	REMARKS
(a)	(b)	(c)	(d)	(e)	(f)		(g)	(h)	(i)	(j)	(k)	(l)	(m)	(n)	(o)	(p)	(q)	(r)
		08 81 00	SD-07 Certificates															
			Insulating Glass	1.7.1	G													
			Glazing Accessories	1.3	G													
			SD-08 Manufacturer's Instructions															
			Setting and sealing materials	2.3														
			Glass setting	3.2														
		08 91 00	SD-02 Shop Drawings															
			Wall louvers	1.4	G													
			Wall louvers	1.5	G													
			SD-03 Product Data															
			Metal Wall Louvers	2.2	G													
		09 22 00	SD-02 Shop Drawings															
			Metal support systems	2.1	G													
		09 24 23	SD-02 Shop Drawings															
			Lath	3.3	G													
			SD-03 Product Data															
			Proportions and Mixing	3.6	G													
			SD-04 Samples															
			Colored Stucco Finish Coat	2.2	G													
			Sample Panel	1.4	G													
			SD-11 Closeout Submittals															
			LEED Documentation	1.2	G													
		09 29 00	SD-03 Product Data															
			Cementitious backer units	2.1.2	G													
			Accessories	2.1.6														
			Certification	1.3														

SUBMITTAL REGISTER

CONTRACT NO.

TITLE AND LOCATION
Djibouti Fuel Storage Facility

CONTRACTOR

ACTIVITY NO	TRANSMITTAL NO	SPEC SECT	DESCRIPTION ITEM SUBMITTED	PARAGRAPH #	CLASSIFICATION	GOVT OR A/E REVWR	CONTRACTOR: SCHEDULE DATES			CONTRACTOR ACTION			APPROVING AUTHORITY				MAILED TO CONTR/ DATE RCD FRM APPR AUTH	REMARKS
							SUBMIT	APPROVAL NEEDED BY	MATERIAL NEEDED BY	ACTION CODE	DATE OF ACTION	DATE FWD TO APPR AUTH/ DATE RCD FROM CONTR	DATE FWD TO OTHER REVIEWER	DATE RCD FROM OTH REVIEWER	ACTION CODE	DATE OF ACTION		
(a)	(b)	(c)	(d)	(e)	(f)		(g)	(h)	(i)	(j)	(k)	(l)	(m)	(n)	(o)	(p)	(q)	(r)
		09 29 00	Gypsum Board	2.1.1	G													
			Adhesives	2.1.5	G													
			Joint Treatment Materials	2.1.3	G													
			SD-07 Certificates															
			Asbestos Free Materials	2.1	G													
			SD-08 Manufacturer's Instructions															
			Material Safety Data Sheets	2.1														
			SD-10 Operation and Maintenance															
			Data															
			Manufacturer maintenance	2.1														
			instructions															
			Waste Management	3.7														
			SD-11 Closeout Submittals															
			Gypsum Board	2.1.1														
			Adhesives	2.1.5														
		09 30 13	SD-02 Shop Drawings															
			Detail Drawings	3.2	G													
			SD-03 Product Data															
			Environmental Data	1.4.1														
			Tile	2.1	G													
			Tile	2.1	G													
			Setting-Bed	2.2	G													
			Mortar, Grout, and Adhesive	2.4	G													
			SD-04 Samples															
			Tile	2.1	G													
			Accessories	2.1	G													

SUBMITTAL REGISTER

CONTRACT NO.

TITLE AND LOCATION
Djibouti Fuel Storage Facility

CONTRACTOR

ACTIVITY NO	TRANSMITTAL NO	SPEC SECT	DESCRIPTION ITEM SUBMITTED	PARAGRAPH #	CLASSIFICATION	GOVT OR A/E REVWR	CONTRACTOR: SCHEDULE DATES			CONTRACTOR ACTION			APPROVING AUTHORITY					
							SUBMIT	APPROVAL NEEDED BY	MATERIAL NEEDED BY	ACTION CODE	DATE OF ACTION	DATE FWD TO APPR AUTH/ DATE RCD FROM CONTR	DATE FWD TO OTHER REVIEWER	DATE RCD FROM OTH REVIEWER	ACTION CODE	DATE OF ACTION	MAILED TO CONTR/ DATE RCD FRM APPR AUTH	REMARKS
(a)	(b)	(c)	(d)	(e)	(f)		(g)	(h)	(i)	(j)	(k)	(l)	(m)	(n)	(o)	(p)	(q)	(r)
		09 30 13	Transition Strips	2.1														
			Transition Strips	2.5														
			Grout	2.4	G													
			SD-07 Certificates															
			Tile	2.1														
			Mortar, Grout, and Adhesive	2.4														
			SD-08 Manufacturer's Instructions															
			Maintenance Instructions	3.7														
			SD-10 Operation and Maintenance															
			Data															
			Installation	3.2	G													
			SD-11 Closeout Submittals															
			LEED Documentation	1.2														
			Tile	2.1														
			Adhesives	2.4														
		09 51 00	SD-02 Shop Drawings															
			Approved Detail Drawings	1.2														
			SD-03 Product Data															
			Certification	1.4	G													
			SD-04 Samples															
			Acoustical Units	2.1														
			Acoustic Ceiling Tiles	2.1.1	G													
			SD-07 Certificates															
			Acoustical Units	2.1														
			Acoustic Ceiling Tiles	2.1.1														
		09 90 00	SD-03 Product Data															

SUBMITTAL REGISTER

CONTRACT NO.

TITLE AND LOCATION
Djibouti Fuel Storage Facility

CONTRACTOR

ACTIVITY NO	TRANSMITTAL NO	SPEC SECT	DESCRIPTION ITEM SUBMITTED	PARAGRAPH #	CLASSIFICATION	GOVT OR A/E REVWR	CONTRACTOR: SCHEDULE DATES			CONTRACTOR ACTION			APPROVING AUTHORITY					
							SUBMIT	APPROVAL NEEDED BY	MATERIAL NEEDED BY	ACTION CODE	DATE OF ACTION	DATE FWD TO APPR AUTH/ DATE RCD FROM CONTR	DATE FWD TO OTHER REVIEWER	DATE RCD FROM OTH REVIEWER	ACTION CODE	DATE OF ACTION	MAILED TO CONTR/ DATE RCD FRM APPR AUTH	REMARKS
(a)	(b)	(c)	(d)	(e)	(f)		(g)	(h)	(i)	(j)	(k)	(l)	(m)	(n)	(o)	(p)	(q)	(r)
		09 90 00	Certification	1.4.1														
			Environmental Data	1.9.1														
			Materials	2.1														
			Coating	2.1	G													
			Manufacturer's Technical Data	2.1														
			Sheets															
			SD-04 Samples															
			Color	1.11	G													
			Applicator's qualifications	1.3														
			SD-08 Manufacturer’s Instructions															
			Mixing	3.5.2														
			Manufacturer's Material Safety	1.7.2														
			Data Sheets															
			SD-10 Operation and Maintenance															
			Data															
			Coatings:	2.1	G													
		09 97 13.15	SD-05 Design Data															
			Environmental Control System	1.4.4.1	G													
			SD-06 Test Reports															
			Coatings Qualification Inspection	1.4.5.1	G													
			Reports															
			Metallic Abrasive Qualification	1.4.5.2	G													
			Test Reports															
			Coating Sample Test Reports	3.1.3	G													
			Abrasive Sample Test Reports	3.1.4	G													
			Inspection Report Forms	3.9.2.2	G													

SUBMITTAL REGISTER

CONTRACT NO.

TITLE AND LOCATION
Djibouti Fuel Storage Facility

CONTRACTOR

ACTIVITY NO	TRANSMITTAL NO	SPEC SECT	DESCRIPTION ITEM SUBMITTED	PARAGRAPH #	CLASSIFICATION	GOVT OR A/E REVWR	CONTRACTOR: SCHEDULE DATES			CONTRACTOR ACTION			APPROVING AUTHORITY				MAILED TO CONTR/	REMARKS
							SUBMIT	APPROVAL NEEDED BY	MATERIAL NEEDED BY	ACTION CODE	DATE OF ACTION	DATE FWD TO APPR AUTH/ DATE RCD FROM CONTR	DATE FWD TO OTHER REVIEWER	DATE RCD FROM OTH REVIEWER	ACTION CODE	DATE OF ACTION	DATE RCD FRM APPR AUTH	
(a)	(b)	(c)	(d)	(e)	(f)		(g)	(h)	(i)	(j)	(k)	(l)	(m)	(n)	(o)	(p)	(q)	(r)
		09 97 13.15	Daily Inspection Reports	3.9.2.3	G													
			Recycled Metallic Abrasive Field	1.4.5.3	G													
			Test Reports (Daily and Weekly)															
			SD-07 Certificates															
			Contract Errors, Omissions, and	1.4.1	G													
			Other Discrepancies															
			Corrective Action Procedures	1.4.2.1	G													
			Coating Work Plan	1.4.3	G													
			Qualifications of Certified	1.4.6.1	G													
			Industrial Hygienist (CIH)															
			Qualifications of Individuals	1.4.6.5	G													
			Performing Abrasive Blasting															
			Qualifications of Individuals	1.4.6.6	G													
			Applying Coatings															
			Qualifications of Individuals	1.4.6.7	G													
			Operating Plural Component															
			Equipment															
			Qualifications of Certified	1.4.6.2	G													
			Protective Coatings Specialist															
			(PCS)															
			Qualifications of Coating	1.4.6.3	G													
			Inspection Company															
			Qualifications of QC Specialist	1.4.6.4	G													
			Coating Inspector															
			Qualifications of Testing	1.4.6.8	G													
			Laboratory for Coatings															

SUBMITTAL REGISTER

CONTRACT NO.

TITLE AND LOCATION
Djibouti Fuel Storage Facility

CONTRACTOR

ACTIVITY NO	TRANSMITTAL NO	SPEC SECT	DESCRIPTION ITEM SUBMITTED	PARAGRAPH #	CLASSIFICATION	GOVT OR A/E REVWR	CONTRACTOR: SCHEDULE DATES			CONTRACTOR ACTION			APPROVING AUTHORITY				MAILED TO CONTR/	REMARKS
							SUBMIT	APPROVAL NEEDED BY	MATERIAL NEEDED BY	ACTION CODE	DATE OF ACTION	DATE FWD TO APPR AUTH/ DATE RCD FROM CONTR	DATE FWD TO OTHER REVIEWER	DATE RCD FROM OTH REVIEWER	ACTION CODE	DATE OF ACTION	DATE RCD FRM APPR AUTH	
(a)	(b)	(c)	(d)	(e)	(f)		(g)	(h)	(i)	(j)	(k)	(l)	(m)	(n)	(o)	(p)	(q)	(r)
		09 97 13.15	Qualifications of Testing	1.4.6.9	G													
			Laboratory for Abrasive															
			Qualifications of Coating	1.4.6.10	G													
			Contractors															
			Roof Joint Sealant Materials	1.4.6.11	G													
			Roof Joint Sealant Compatibility	1.4.6.12	G													
			Coating Materials	1.4.6.13	G													
			Non-metallic Abrasive	1.4.6.14	G													
			Metallic Abrasive	1.4.6.15	G													
			SD-08 Manufacturer's Instructions															
			Roof Joint Sealant Instructions	1.5.1	G													
			Coating System Instructions	1.5.2	G													
			SD-11 Closeout Submittals															
			Disposal of Used Abrasive	3.6.6	G													
			Inspection Logbook	3.9.2.4	G													
		09 97 13.27	SD-05 Design Data															
			Containment System	1.4.4.1														
			SD-06 Test Reports															
			Joint Sealant Qualification Test	1.4.5.1	G													
			Reports															
			Coatings Qualification Test	1.4.5.2	G													
			Reports															
			Metallic Abrasive Qualification	1.4.5.3	G													
			Test Reports															
			Coating Sample Test Reports	3.1.3	G													
			Abrasive Sample Test Reports	3.1.4	G													

SUBMITTAL REGISTER

CONTRACT NO.

TITLE AND LOCATION
Djibouti Fuel Storage Facility

CONTRACTOR

ACTIVITY NO	TRANSMITTAL NO	SPEC SECT	DESCRIPTION ITEM SUBMITTED	PARAGRAPH #	CLASSIFICATION	GOVT OR A/E REVWR	CONTRACTOR: SCHEDULE DATES			CONTRACTOR ACTION			APPROVING AUTHORITY					
							SUBMIT	APPROVAL NEEDED BY	MATERIAL NEEDED BY	ACTION CODE	DATE OF ACTION	DATE FWD TO APPR AUTH/ DATE RCD FROM CONTR	DATE FWD TO OTHER REVIEWER	DATE RCD FROM OTH REVIEWER	ACTION CODE	DATE OF ACTION	MAILED TO CONTR/ DATE RCD FRM APPR AUTH	REMARKS
(a)	(b)	(c)	(d)	(e)	(f)		(g)	(h)	(i)	(j)	(k)	(l)	(m)	(n)	(o)	(p)	(q)	(r)
		09 97 13.27	Inspection Report Forms	3.8.2.2	G													
			Daily Inspection Reports	3.8.2.3	G													
			Recycled Metallic Abrasive Field	1.4.5.4														
			Test Reports (Daily and Weekly)															
			SD-07 Certificates															
			Contract Errors, Omissions, and	1.4.1	G													
			Other Discrepancies															
			Corrective Action Procedures	1.4.2.1	G													
			Coating Work Plan	1.4.3	G													
			Qualifications of Certified	1.4.6.1	G													
			Industrial Hygienist (CIH)															
			Qualifications Of Individuals	1.4.6.5	G													
			Performing Abrasive Blasting															
			Qualifications of Certified	1.4.6.2	G													
			Protective Coatings Specialist															
			(PCS)															
			Qualifications of Coating	1.4.6.3	G													
			Inspection Company															
			Qualifications of QC Specialist	1.4.6.4	G													
			Coating Inspector															
			Qualifications of Testing	1.4.6.6	G													
			Laboratory for Coatings															
			Qualifications of Testing	1.4.6.7	G													
			Laboratory for Abrasive															
			Qualifications of Coating	1.4.6.8	G													
			Contractors															

SUBMITTAL REGISTER

CONTRACT NO.

TITLE AND LOCATION
Djibouti Fuel Storage Facility

CONTRACTOR

ACTIVITY NO	TRANSMITTAL NO	SPEC SECT	DESCRIPTION ITEM SUBMITTED	PARAGRAPH #	CLASSIFICATION	GOVT OR A/E REVWR	CONTRACTOR: SCHEDULE DATES			CONTRACTOR ACTION			APPROVING AUTHORITY					
							SUBMIT	APPROVAL NEEDED BY	MATERIAL NEEDED BY	ACTION CODE	DATE OF ACTION	DATE FWD TO APPR AUTH/ DATE RCD FROM CONTR	DATE FWD TO OTHER REVIEWER	DATE RCD FROM OTH REVIEWER	ACTION CODE	DATE OF ACTION	MAILED TO CONTR/ DATE RCD FRM APPR AUTH	REMARKS
(a)	(b)	(c)	(d)	(e)	(f)		(g)	(h)	(i)	(j)	(k)	(l)	(m)	(n)	(o)	(p)	(q)	(r)
		09 97 13.27	Joint Sealant Materials	1.4.6.9	G													
			Coating Materials	1.4.6.10	G													
			Coating System Component	1.4.6.11	G													
			Compatibility															
			Non-metallic Abrasive	1.4.6.12	G													
			Metallic Abrasive	1.4.6.13	G													
			SD-08 Manufacturer's Instructions															
			Joint Sealant Instructions	1.5.1	G													
			Coating System Instructions	1.5.2	G													
			SD-11 Closeout Submittals															
			Disposal of Used Abrasive	3.5.6	G													
			Inspection Logbook	3.8.2.4	G													
		10 14 00.20	SD-02 Shop Drawings															
			Detail Drawings	1.4.2	G													
			SD-03 Product Data															
			Installation	3.1	G													
			Warranty	1.6	G													
			SD-04 Samples															
			Interior Signage	1.4.1	G													
			SD-11 Closeout Submittals															
			LEED Documentation	1.2.1	S													
		10 21 13	SD-02 Shop Drawings															
			Fabrication Drawings	2.1	G													
			Installation Drawings	3.3	G													
			SD-03 Product Data															

SUBMITTAL REGISTER

CONTRACT NO.

TITLE AND LOCATION
Djibouti Fuel Storage Facility

CONTRACTOR

ACTIVITY NO	TRANSMITTAL NO	SPEC SECT	DESCRIPTION ITEM SUBMITTED	PARAGRAPH #	CLASSIFICATION	GOVT OR A/E REVWR	CONTRACTOR: SCHEDULE DATES			CONTRACTOR ACTION			APPROVING AUTHORITY				MAILED TO CONTR/ DATE RCD FRM APPR AUTH	REMARKS
							SUBMIT	APPROVAL NEEDED BY	MATERIAL NEEDED BY	ACTION CODE	DATE OF ACTION	DATE FWD TO APPR AUTH/ DATE RCD FROM CONTR	DATE FWD TO OTHER REVIEWER	DATE RCD FROM OTH REVIEWER	ACTION CODE	DATE OF ACTION		
(a)	(b)	(c)	(d)	(e)	(f)		(g)	(h)	(i)	(j)	(k)	(l)	(m)	(n)	(o)	(p)	(q)	(r)
		10 21 13	Cleaning and Maintenance	2.1														
			Instructions															
			Colors And Finishes	2.7														
			Galvanized Steel Sheet	2.2.1														
			Anchoring Devices and Fasteners	2.2.3														
			Hardware and Fittings	2.2.5														
			Brackets	2.2.4														
			Door Hardware	2.2.6														
			Environmental Data	2.1.1.1														
			Toilet Enclosures	2.3.1														
			Urinal Screens	2.3.2														
			Pilaster Shoes	2.5														
			SD-04 Samples															
			Colors and Finishes	2.7	G													
			SD-07 Certificates															
			Warranty	1.6														
			SD-11 Closeout Submittals															
			LEED Documentation	1.2.1														
			Toilet Enclosures	2.3.1														
			Urinal Screens	2.3.2														
			Pilaster Shoes	2.5														
		10 28 13	SD-03 Product Data															
			Finishes	2.1.2	G													
			Accessory Items	2.2	G													
			SD-11 Closeout Submittals															
			LEED Documentation	1.2														

SUBMITTAL REGISTER

CONTRACT NO.

TITLE AND LOCATION
Djibouti Fuel Storage Facility

CONTRACTOR

ACTIVITY NO	TRANSMITTAL NO	SPEC SECT	DESCRIPTION ITEM SUBMITTED	PARAGRAPH #	CLASSIFICATION	GOVT OR A/E REVWR	CONTRACTOR: SCHEDULE DATES			CONTRACTOR ACTION			APPROVING AUTHORITY				MAILED TO CONTR/	REMARKS
							SUBMIT	APPROVAL NEEDED BY	MATERIAL NEEDED BY	ACTION CODE	DATE OF ACTION	DATE FWD TO APPR AUTH/ DATE RCD FROM CONTR	DATE FWD TO OTHER REVIEWER	DATE RCD FROM OTH REVIEWER	ACTION CODE	DATE OF ACTION	DATE RCD FRM APPR AUTH	
(a)	(b)	(c)	(d)	(e)	(f)		(g)	(h)	(i)	(j)	(k)	(l)	(m)	(n)	(o)	(p)	(q)	(r)
		10 44 16	SD-01 Preconstruction Submittals															
			Manufacturer's Data	2.1	G													
			SD-02 Shop Drawings															
			Cabinets	Part 2	G													
			SD-03 Product Data															
			Fire Extinguishers	2.1	G													
			Cabinets	Part 2	G													
			SD-07 Certificates															
			Fire Extinguishers	2.1	G													
			Manufacturer's Warranty with	2.1	G													
			Inspection Tag															
		10 51 13	SD-02 Shop Drawings															
			Types	2.1	G													
			Location	1.4	G													
			Installation	3.1														
			Numbering system	3.2														
			SD-03 Product Data															
			Material	2.2	G													
			Finish	2.2.3														
			Color chips	1.5.1	G													
		12 24 13	SD-02 Shop Drawings															
			Installation	3.2	G													
			SD-03 Product Data															
			Window Shades	2.1	G													
			SD-04 Samples															
			Window Shades	2.1	G													

SUBMITTAL REGISTER

CONTRACT NO.

TITLE AND LOCATION
Djibouti Fuel Storage Facility

CONTRACTOR

ACTIVITY NO	TRANSMITTAL NO	SPEC SECT	DESCRIPTION ITEM SUBMITTED	PARAGRAPH #	CLASSIFICATION	GOVT OR A/E REVWR	CONTRACTOR: SCHEDULE DATES			CONTRACTOR ACTION			APPROVING AUTHORITY					
							SUBMIT	APPROVAL NEEDED BY	MATERIAL NEEDED BY	ACTION CODE	DATE OF ACTION	DATE FWD TO APPR AUTH/ DATE RCD FROM CONTR	DATE FWD TO OTHER REVIEWER	DATE RCD FROM OTH REVIEWER	ACTION CODE	DATE OF ACTION	MAILED TO CONTR/ DATE RCD FRM APPR AUTH	REMARKS
(a)	(b)	(c)	(d)	(e)	(f)		(g)	(h)	(i)	(j)	(k)	(l)	(m)	(n)	(o)	(p)	(q)	(r)
		12 24 13	SD-06 Test Reports															
			Window Shades	2.1														
			SD-08 Manufacturer’s Instructions															
			Window Shades	2.1														
			SD-10 Operation and Maintenance															
			Data															
			Window Shades	2.1														
			SD-11 Closeout Submittals															
			LEED Documentation	1.3														
		12 31 00	SD-03 Product Data															
			Cabinets	2.3.4	G													
			Countertops	2.6	G													
			SD-04 Samples															
			Manufacturer's Standard Color	1.2.1	G													
			Charts															
		12 48 13	SD-02 Shop Drawings															
			Installation Drawings	3.2	G													
			Detail Drawings	3.2	G													
			SD-03 Product Data															
			Entrance Floor Mats and Frames	2.1	G													
			Adhesives and Concrete Primers	2.2	G													
			SD-08 Manufacturer’s Instructions															
			Manufacturer's Instructions	3.2	G													
			SD-10 Operation and Maintenance															
			Data															

SUBMITTAL REGISTER

CONTRACT NO.

TITLE AND LOCATION
Djibouti Fuel Storage Facility

CONTRACTOR

ACTIVITY NO	TRANSMITTAL NO	SPEC SECT	DESCRIPTION ITEM SUBMITTED	PARAGRAPH #	CLASSIFICATION	GOVT OR A/E REVWR	CONTRACTOR: SCHEDULE DATES			CONTRACTOR ACTION			APPROVING AUTHORITY					
							SUBMIT	APPROVAL NEEDED BY	MATERIAL NEEDED BY	ACTION CODE	DATE OF ACTION	DATE FWD TO APPR AUTH/ DATE RCD FROM CONTR	DATE FWD TO OTHER REVIEWER	DATE RCD FROM OTH REVIEWER	ACTION CODE	DATE OF ACTION	MAILED TO CONTR/ DATE RCD FRM APPR AUTH	REMARKS
(a)	(b)	(c)	(d)	(e)	(f)		(g)	(h)	(i)	(j)	(k)	(l)	(m)	(n)	(o)	(p)	(q)	(r)
		12 48 13	Protection, Maintenance, and	3.2	G													
			Repair Information															
			SD-11 Closeout Submittals															
			LEED (TM) Documentation	1.2.1	G													
		13 34 19	SD-01 Preconstruction Submittals															
			Manufacturer's Qualifications	1.6.3	G													
			SD-02 Shop Drawings															
			Detail Drawings	1.2.1.6	G													
			Detail Drawings	1.6.1	G													
			SD-05 Design Data															
			descriptive and technical	1.6.1	G													
			literature															
			building design analysis	1.6.1	G													
			SD-07 Certificates															
			Qualification of Manufacturer	1.6.1	G													
			Qualification of Erector	1.6.1	G													
			SD-08 Manufacturer’s Instructions															
			shipping, handling, and storage	1.7	G													
			SD-11 Closeout Submittals															
			Manufacturer's Warranty	3.7.1	G													
			Contractor's Warranty for	3.7.2	G													
			Installation															
		21 13 13.00 20	SD-02 Shop Drawings															
			Shop Drawings	1.5.1	G													
			SD-03 Product Data															
			Pipe	2.2.1	G													

SUBMITTAL REGISTER

CONTRACT NO.

TITLE AND LOCATION
Djibouti Fuel Storage Facility

CONTRACTOR

ACTIVITY NO	TRANSMITTAL NO	SPEC SECT	DESCRIPTION ITEM SUBMITTED	PARAGRAPH #	CLASSIFICATION	GOVT OR A/E REVWR	CONTRACTOR: SCHEDULE DATES			CONTRACTOR ACTION			APPROVING AUTHORITY					
							SUBMIT	APPROVAL NEEDED BY	MATERIAL NEEDED BY	ACTION CODE	DATE OF ACTION	DATE FWD TO APPR AUTH/ DATE RCD FROM CONTR	DATE FWD TO OTHER REVIEWER	DATE RCD FROM OTH REVIEWER	ACTION CODE	DATE OF ACTION	MAILED TO CONTR/ DATE RCD FRM APPR AUTH	REMARKS
(a)	(b)	(c)	(d)	(e)	(f)		(g)	(h)	(i)	(j)	(k)	(l)	(m)	(n)	(o)	(p)	(q)	(r)
		21 13 13.00 20	Fittings	2.2.1	G													
			Valves	2.2.4	G													
			Sprinklers	2.2.3	G													
			Pipe hangers and supports	2.2.5	G													
			Sprinkler Alarm Switches	2.3.1	G													
			Fire department connections	2.2.6	G													
			Mechanical couplings	2.2.1	G													
			Backflow Prevention Assembly	2.2.7	G													
			Seismic Bracing	2.2.5	G													
			SD-05 Design Data															
			Hydraulic Calculations	1.3	G													
			SD-06 Test Reports															
			request to schedule Preliminary	3.6	G													
			Tests															
			Preliminary Test Report	3.6	G													
			request to schedule Final	3.7	G													
			Acceptance Test															
			Final Acceptance Test Report	3.7	G													
			SD-07 Certificates															
			Inspection by Fire Protection	3.1	G													
			Engineer															
			Fire Protection Engineer	3.1	G													
			Sprinkler System Installer	1.5.1	G													
			SD-10 Operation and Maintenance															
			Data															

SUBMITTAL REGISTER

CONTRACT NO.

TITLE AND LOCATION
Djibouti Fuel Storage Facility

CONTRACTOR

ACTIVITY NO	TRANSMITTAL NO	SPEC SECT	DESCRIPTION ITEM SUBMITTED	PARAGRAPH #	CLASSIFICATION	GOVT OR A/E REVWR	CONTRACTOR: SCHEDULE DATES			CONTRACTOR ACTION			APPROVING AUTHORITY					
							SUBMIT	APPROVAL NEEDED BY	MATERIAL NEEDED BY	ACTION CODE	DATE OF ACTION	DATE FWD TO APPR AUTH/ DATE RCD FROM CONTR	DATE FWD TO OTHER REVIEWER	DATE RCD FROM OTH REVIEWER	ACTION CODE	DATE OF ACTION	MAILED TO CONTR/ DATE RCD FRM APPR AUTH	REMARKS
(a)	(b)	(c)	(d)	(e)	(f)		(g)	(h)	(i)	(j)	(k)	(l)	(m)	(n)	(o)	(p)	(q)	(r)
		21 13 13.00 20	Operating and Maintenance	3.8														
			Instructions															
			SD-11 Closeout Submittals															
			As-built drawings	1.5.1														
			On-site training	3.8														
		22 00 00	SD-02 Shop Drawings															
			Eastern Style Water Closet	2.4.2	G													
			SD-03 Product Data															
			Fixtures	2.4														
			Flush valve water closets	2.4.1														
			Flush valve urinals	2.4.3														
			Wall hung lavatories	2.4.4														
			Kitchen sinks	2.4.5														
			Mop Service Basin	2.4.6	G													
			Electric Water coolers	2.4.7	G													
			Eastern Style Water Closet	2.4.2	G													
			Flush Valve for Eastern Style	2.4.2.1	G													
			Water Closet															
			Plastic shower stalls	2.4.9														
			Water heaters	2.9	G													
			Backflow prevention assemblies	3.6.1.1	G													
			Shower Faucets	2.6.2	G													
			Glassware Washer	2.4.11	G													
			Welding	1.5.1														
			SD-06 Test Reports															
			Tests, Flushing and Disinfection	3.6														

SUBMITTAL REGISTER

CONTRACT NO.

TITLE AND LOCATION
Djibouti Fuel Storage Facility

CONTRACTOR

ACTIVITY NO	TRANSMITTAL NO	SPEC SECT	DESCRIPTION ITEM SUBMITTED	PARAGRAPH #	CLASSIFICATION	GOVT OR A/E REVWR	CONTRACTOR: SCHEDULE DATES			CONTRACTOR ACTION			APPROVING AUTHORITY					
							SUBMIT	APPROVAL NEEDED BY	MATERIAL NEEDED BY	ACTION CODE	DATE OF ACTION	DATE FWD TO APPR AUTH/ DATE RCD FROM CONTR	DATE FWD TO OTHER REVIEWER	DATE RCD FROM OTH REVIEWER	ACTION CODE	DATE OF ACTION	MAILED TO CONTR/ DATE RCD FRM APPR AUTH	REMARKS
(a)	(b)	(c)	(d)	(e)	(f)		(g)	(h)	(i)	(j)	(k)	(l)	(m)	(n)	(o)	(p)	(q)	(r)
		22 00 00	Test of Backflow Prevention	3.6.1.1	G													
			Assemblies															
			SD-07 Certificates															
			Materials and Equipment	1.3														
			Bolts	2.1.1														
			SD-10 Operation and Maintenance															
			Data															
			Plumbing System	3.6.1	G													
		22 14 29.00 40	SD-02 Shop Drawings															
			Connection Diagrams	2.1	G													
			Control Diagrams	2.1	G													
			Fabrication Drawings	2.1	G													
			Installation Drawings	2.1	G													
			SD-03 Product Data															
			Manufacturer's Catalog Data	2.1	G													
			Pump Performance Curve	2.1	G													
			Spare Parts List	3.3	G													
			Special Tools	3.3	G													
			Submersible Pumps	2.2.1	G													
			Accessories	2.2.1	G													
			SD-06 Test Reports															
			Hydrostatic Leak	3.2.2	G													
			Static Heads	3.2.2	G													
			Pump Flow Capacity	3.2.2	G													
			SD-08 Manufacturer’s Instructions															

SUBMITTAL REGISTER

CONTRACT NO.

TITLE AND LOCATION
Djibouti Fuel Storage Facility

CONTRACTOR

ACTIVITY NO	TRANSMITTAL NO	SPEC SECT	DESCRIPTION ITEM SUBMITTED	PARAGRAPH #	CLASSIFICATION	GOVT OR A/E REVWR	CONTRACTOR: SCHEDULE DATES			CONTRACTOR ACTION			APPROVING AUTHORITY					
							SUBMIT	APPROVAL NEEDED BY	MATERIAL NEEDED BY	ACTION CODE	DATE OF ACTION	DATE FWD TO APPR AUTH/ DATE RCD FROM CONTR	DATE FWD TO OTHER REVIEWER	DATE RCD FROM OTH REVIEWER	ACTION CODE	DATE OF ACTION	MAILED TO CONTR/ DATE RCD FRM APPR AUTH	REMARKS
(a)	(b)	(c)	(d)	(e)	(f)		(g)	(h)	(i)	(j)	(k)	(l)	(m)	(n)	(o)	(p)	(q)	(r)
		22 14 29.00 40	Manufacturer's Installation	2.1	G													
			Instructions															
			Vibration Specifications	2.1	G													
		23 00 00	SD-03 Product Data															
			Insulated Nonmetallic Flexible	2.8.1.1														
			Duct Runouts															
			Duct Connectors	2.8.1.1														
			Duct Access Doors	2.8.2														
			Fire Dampers	2.8.3														
			Manual Balancing Dampers	2.8.4	G													
			Diffusers	2.8.6.1	G	S												
			Registers and Grilles	2.8.6.2	G	S												
			Louvers	2.8.7														
			Centrifugal Type Power Wall	2.9.1.1														
			Ventilators															
			Centrifugal Type Power Roof	2.9.1.2														
			Ventilators															
			Ceiling Exhaust Fans	2.9.1.3														
			Laboratory Fume Hoods	2.10	G	S												
			SD-06 Test Reports															
			Performance Tests	3.10	G													
			Damper Acceptance Test	3.8	G													
			Laboratory Fume Hoods	2.10	G													
			SD-08 Manufacturer’s Instructions															
			Manufacturer's Installation	3.2														
			Instructions															

SUBMITTAL REGISTER

CONTRACT NO.

TITLE AND LOCATION
Djibouti Fuel Storage Facility

CONTRACTOR

ACTIVITY NO	TRANSMITTAL NO	SPEC SECT	DESCRIPTION ITEM SUBMITTED	PARAGRAPH #	CLASSIFICATION	GOVT OR A/E REVWR	CONTRACTOR: SCHEDULE DATES			CONTRACTOR ACTION			APPROVING AUTHORITY					
							SUBMIT	APPROVAL NEEDED BY	MATERIAL NEEDED BY	ACTION CODE	DATE OF ACTION	DATE FWD TO APPR AUTH/ DATE RCD FROM CONTR	DATE FWD TO OTHER REVIEWER	DATE RCD FROM OTH REVIEWER	ACTION CODE	DATE OF ACTION	MAILED TO CONTR/ DATE RCD FRM APPR AUTH	REMARKS
(a)	(b)	(c)	(d)	(e)	(f)		(g)	(h)	(i)	(j)	(k)	(l)	(m)	(n)	(o)	(p)	(q)	(r)
		23 00 00	Operation and Maintenance	3.12.2														
			Training															
			SD-10 Operation and Maintenance															
			Data															
			Operation and Maintenance	3.12.1	G													
			Manuals															
			Fire Dampers	2.8.3	G													
			Manual Balancing Dampers	2.8.4	G													
			Centrifugal Type Power Wall	2.9.1.1	G													
			Ventilators															
			Centrifugal Type Power Roof	2.9.1.2	G													
			Ventilators															
			Ceiling Exhaust Fans	2.9.1.3	G													
			Laboratory Fume Hoods	2.10	G													
		23 07 00	SD-03 Product Data															
			Pipe Insulation Systems	2.3	G	S												
			Pipe Insulation Systems	3.2	G	S												
			Duct Insulation Systems	3.3	G	S												
			SD-08 Manufacturer's Instructions															
			Pipe Insulation Systems	2.3	G													
			Pipe Insulation Systems	3.2	G													
			Duct Insulation Systems	3.3	G													
		23 08 00.00 10	SD-02 Shop Drawings															
			Commissioning Plan	1.5.2.2	G													
			SD-03 Product Data															

SUBMITTAL REGISTER

CONTRACT NO.

TITLE AND LOCATION
Djibouti Fuel Storage Facility

CONTRACTOR

ACTIVITY NO	TRANSMITTAL NO	SPEC SECT	DESCRIPTION ITEM SUBMITTED	PARAGRAPH #	CLASSIFICATION	GOVT OR A/E REVWR	CONTRACTOR: SCHEDULE DATES			CONTRACTOR ACTION			APPROVING AUTHORITY					
							SUBMIT	APPROVAL NEEDED BY	MATERIAL NEEDED BY	ACTION CODE	DATE OF ACTION	DATE FWD TO APPR AUTH/ DATE RCD FROM CONTR	DATE FWD TO OTHER REVIEWER	DATE RCD FROM OTH REVIEWER	ACTION CODE	DATE OF ACTION	MAILED TO CONTR/ DATE RCD FRM APPR AUTH	REMARKS
(a)	(b)	(c)	(d)	(e)	(f)		(g)	(h)	(i)	(j)	(k)	(l)	(m)	(n)	(o)	(p)	(q)	(r)
		23 08 00.00 10	Pre-Functional Performance Test	3.2.1	G													
			Checklists															
			Functional Performance Tests	3.2.2	G													
			SD-06 Test Reports															
			Commissioning Report	3.3	G													
			SD-07 Certificates															
			Commissioning Firm	1.5.1	G													
			Commissioning Specialist	1.5.2	G													
		23 23 00	SD-03 Product Data															
			Refrigerant Piping System	2.3														
			Qualifications	1.3.1														
			Refrigerant Piping Tests	3.4														
			SD-06 Test Reports															
			Refrigerant Piping Tests	3.4														
			SD-07 Certificates															
			Service Organization	2.1														
			SD-10 Operation and Maintenance															
			Data															
			Maintenance	1.5														
		23 74 33.00 40	SD-03 Product Data															
			Equipment and Performance	1.3														
			Data															
			Air-Conditioning Systems	3.2.1														
			Compressor	2.1.1.1														
			Cooling Coil	2.1.1.2														
			Fans	2.1.1.3														

SUBMITTAL REGISTER

CONTRACT NO.

TITLE AND LOCATION
Djibouti Fuel Storage Facility

CONTRACTOR

ACTIVITY NO	TRANSMITTAL NO	SPEC SECT	DESCRIPTION ITEM SUBMITTED	PARAGRAPH #	CLASSIFICATION	GOVT OR A/E REVWR	CONTRACTOR: SCHEDULE DATES			CONTRACTOR ACTION			APPROVING AUTHORITY				MAILED TO CONTR/	REMARKS
							SUBMIT	APPROVAL NEEDED BY	MATERIAL NEEDED BY	ACTION CODE	DATE OF ACTION	DATE FWD TO APPR AUTH/ DATE RCD FROM CONTR	DATE FWD TO OTHER REVIEWER	DATE RCD FROM OTH REVIEWER	ACTION CODE	DATE OF ACTION	DATE RCD FRM APPR AUTH	
(a)	(b)	(c)	(d)	(e)	(f)		(g)	(h)	(i)	(j)	(k)	(l)	(m)	(n)	(o)	(p)	(q)	(r)
		23 74 33.00 40	Controls	2.1.1.5														
			Casing	2.1.1.4														
			Filters	2.1.1.6														
			Condenser	2.1.1.7														
			SD-07 Certificates															
			Listing of Product Installations	3.1														
			SD-10 Operation and Maintenance															
			Data															
			Operation and Maintenance	3.3														
			Manuals															
		23 81 00.00 20	SD-02 Shop Drawings															
			Control system wiring diagrams	1.4.2														
			SD-03 Product Data															
			Air conditioners	2.1														
			Filters	2.2														
			Thermostats	2.1.9														
			SD-06 Test Reports															
			Salt-spray tests	2.5.1														
			Start-up and initial operational	3.7.3														
			tests															
			SD-08 Manufacturer's Instructions															
			Air conditioners	2.1														
			Filters	2.2														
			Thermostats	2.1.9														
			SD-10 Operation and Maintenance															
			Data															

SUBMITTAL REGISTER

CONTRACT NO.

TITLE AND LOCATION
Djibouti Fuel Storage Facility

CONTRACTOR

ACTIVITY NO	TRANSMITTAL NO	SPEC SECT	DESCRIPTION ITEM SUBMITTED	PARAGRAPH #	CLASSIFICATION	GOVT OR A/E REVWR	CONTRACTOR: SCHEDULE DATES			CONTRACTOR ACTION			APPROVING AUTHORITY					
							SUBMIT	APPROVAL NEEDED BY	MATERIAL NEEDED BY	ACTION CODE	DATE OF ACTION	DATE FWD TO APPR AUTH/ DATE RCD FROM CONTR	DATE FWD TO OTHER REVIEWER	DATE RCD FROM OTH REVIEWER	ACTION CODE	DATE OF ACTION	MAILED TO CONTR/ DATE RCD FRM APPR AUTH	REMARKS
(a)	(b)	(c)	(d)	(e)	(f)		(g)	(h)	(i)	(j)	(k)	(l)	(m)	(n)	(o)	(p)	(q)	(r)
		23 81 00.00 20	Air conditioners	2.1														
			Filters	2.2														
			Thermostats	2.1.9														
			SD-11 Closeout Submittals															
			Posted operating instructions	1.4.4														
		26 08 00	SD-06 Test Reports															
			Acceptance tests and inspections	3.1	G													
			SD-07 Certificates															
			Qualifications	1.4.1	G													
			Acceptance test and inspections	1.4.3	G													
			procedure															
		26 12 19.10	SD-02 Shop Drawings															
			Pad-mounted transformer	1.5.1	G													
			drawings															
			SD-03 Product Data															
			Pad-mounted transformers	2.2	G													
			SD-06 Test Reports															
			Acceptance checks and tests	3.6.1	G													
			SD-07 Certificates															
			Transformer Efficiencies	2.2.2.1	G													
			Transformer Efficiencies	2.2.3.1	G													
			SD-09 Manufacturer’s Field															
			Reports															
			design tests	2.7.2	G													
			routine and other tests	2.7.3	G													

SUBMITTAL REGISTER

CONTRACT NO.

TITLE AND LOCATION
Djibouti Fuel Storage Facility

CONTRACTOR

ACTIVITY NO	TRANSMITTAL NO	SPEC SECT	DESCRIPTION ITEM SUBMITTED	PARAGRAPH #	CLASSIFICATION	GOVT OR A/E REVWR	CONTRACTOR: SCHEDULE DATES			CONTRACTOR ACTION			APPROVING AUTHORITY					
							SUBMIT	APPROVAL NEEDED BY	MATERIAL NEEDED BY	ACTION CODE	DATE OF ACTION	DATE FWD TO APPR AUTH/ DATE RCD FROM CONTR	DATE FWD TO OTHER REVIEWER	DATE RCD FROM OTH REVIEWER	ACTION CODE	DATE OF ACTION	MAILED TO CONTR/ DATE RCD FRM APPR AUTH	REMARKS
(a)	(b)	(c)	(d)	(e)	(f)		(g)	(h)	(i)	(j)	(k)	(l)	(m)	(n)	(o)	(p)	(q)	(r)
		26 12 19.10	SD-10 Operation and Maintenance															
			Data															
			Transformer(s)	1.6.1	G													
			SD-11 Closeout Submittals															
			Transformer test schedule	2.7.1	G													
		26 13 00	SD-02 Shop Drawings															
			Switchgear Drawings	1.5.1	G													
			SD-03 Product Data															
			SF6/High-Firepoint Fluid	1.6.1	G													
			Insulated Pad-mounted Switchgear															
			SF6/High-Firepoint Fluid	2.1	G													
			Insulated Pad-mounted Switchgear															
			Insulated High-Voltage	2.2	G													
			Connectors															
			Surge Arresters	2.3	G													
			SD-06 Test Reports															
			Acceptance Checks and Tests	3.4.1	G													
			SD-07 Certificates															
			Paint Coating System	1.5.2	G													
			SD-09 Manufacturer's Field															
			Reports															
			Switchgear design and production	2.5.1	G													
			tests															
			SD-10 Operation and Maintenance															
			Data															

SUBMITTAL REGISTER

CONTRACT NO.

TITLE AND LOCATION
Djibouti Fuel Storage Facility

CONTRACTOR

ACTIVITY NO	TRANSMITTAL NO	SPEC SECT	DESCRIPTION ITEM SUBMITTED	PARAGRAPH #	CLASSIFICATION	GOVT OR A/E REVWR	CONTRACTOR: SCHEDULE DATES			CONTRACTOR ACTION			APPROVING AUTHORITY				MAILED TO CONTR/	
							SUBMIT	APPROVAL NEEDED BY	MATERIAL NEEDED BY	ACTION CODE	DATE OF ACTION	DATE FWD TO APPR AUTH/ DATE RCD FROM CONTR	DATE FWD TO OTHER REVIEWER	DATE RCD FROM OTH REVIEWER	ACTION CODE	DATE OF ACTION	DATE RCD FRM APPR AUTH	REMARKS
(a)	(b)	(c)	(d)	(e)	(f)		(g)	(h)	(i)	(j)	(k)	(l)	(m)	(n)	(o)	(p)	(q)	(r)
		26 13 00	SF6/High-Firepoint Fluid	1.6.1	G													
			Insulated Pad-mounted Switchgear															
			SF6/High-Firepoint Fluid	2.1	G													
			Insulated Pad-mounted Switchgear															
		26 20 00	SD-02 Shop Drawings															
			Panelboards	2.13	G													
			Transformers	2.16	G													
			Cable trays	2.3	G													
			Motor control centers	2.20	G													
			Wireways	2.29	G													
			Marking strips	3.1.11.1	G													
			SD-03 Product Data															
			Receptacles	2.12	G													
			Circuit breakers	2.13.3	G													
			Switches	2.10	G													
			Transformers	2.16	G													
			Enclosed circuit breakers	2.14	G													
			Motor controllers	2.18	G													
			Combination motor controllers	2.20.2	G													
			Manual motor starters	2.19	G													
			Grounding Busbar	2.23.3	G													
			Surge protective devices	2.30	G													
			SD-06 Test Reports															
			600-volt wiring test	3.5.2	G													
			Grounding system test	3.5.4	G													
			Ground-fault receptacle test	3.5.3	G													

SUBMITTAL REGISTER

CONTRACT NO.

TITLE AND LOCATION
Djibouti Fuel Storage Facility

CONTRACTOR

ACTIVITY NO	TRANSMITTAL NO	SPEC SECT	DESCRIPTION ITEM SUBMITTED	PARAGRAPH #	CLASSIFICATION	GOVT OR A/E REVWR	CONTRACTOR: SCHEDULE DATES			CONTRACTOR ACTION			APPROVING AUTHORITY					
							SUBMIT	APPROVAL NEEDED BY	MATERIAL NEEDED BY	ACTION CODE	DATE OF ACTION	DATE FWD TO APPR AUTH/ DATE RCD FROM CONTR	DATE FWD TO OTHER REVIEWER	DATE RCD FROM OTH REVIEWER	ACTION CODE	DATE OF ACTION	MAILED TO CONTR/ DATE RCD FRM APPR AUTH	REMARKS
(a)	(b)	(c)	(d)	(e)	(f)		(g)	(h)	(i)	(j)	(k)	(l)	(m)	(n)	(o)	(p)	(q)	(r)
		26 20 00	SD-07 Certificates															
			Fuses	2.11	G													
		26 24 13	SD-02 Shop Drawings															
			Switchboard Drawings	1.5.2	G													
			SD-03 Product Data															
			Switchboard	2.2	G													
			SD-06 Test Reports															
			Acceptance Checks and Tests	3.5.1	G													
			SD-10 Operation and Maintenance															
			Data															
			Switchboard Operation and	1.6.1	G													
			Maintenance															
			SD-11 Closeout Submittals															
			Assembled Operation and	1.6.2	G													
			Maintenance Manuals															
			Equipment Test Schedule	2.5.1	G													
			Request for Settings	3.5	G													
			Service Entrance Available Fault	2.7	G													
			Current Label															
		26 32 13.00 20	SD-02 Shop Drawings															
			Engine-Generator set and	1.5.1.1	G													
			auxiliary equipment															
			Auxiliary systems	1.5.1.2	G													
			SD-03 Product Data															
			Engine-generator set data	1.3.1	G													
			Engine-generator set efficiencies	1.3.2	G													

SUBMITTAL REGISTER

CONTRACT NO.

TITLE AND LOCATION
Djibouti Fuel Storage Facility

CONTRACTOR

ACTIVITY NO	TRANSMITTAL NO	SPEC SECT	DESCRIPTION ITEM SUBMITTED	PARAGRAPH #	CLASSIFICATION	GOVT OR A/E REVWR	CONTRACTOR: SCHEDULE DATES			CONTRACTOR ACTION			APPROVING AUTHORITY				MAILED TO CONTR/ DATE RCD FRM APPR AUTH	REMARKS
							SUBMIT	APPROVAL NEEDED BY	MATERIAL NEEDED BY	ACTION CODE	DATE OF ACTION	DATE FWD TO APPR AUTH/ DATE RCD FROM CONTR	DATE FWD TO OTHER REVIEWER	DATE RCD FROM OTH REVIEWER	ACTION CODE	DATE OF ACTION		
(a)	(b)	(c)	(d)	(e)	(f)		(g)	(h)	(i)	(j)	(k)	(l)	(m)	(n)	(o)	(p)	(q)	(r)
		26 32 13.00 20	Diesel engine data	1.3.3	G													
			Generator and exciter data	1.3.4	G													
			Diesel engine-generator set	2.1	G													
			Auxiliary systems and equipment	2.2	G													
			Remote alarm annunciator	2.2.7	G													
			SD-05 Design Data															
			Capacity calculations for	1.3.5	G													
			engine-generator set															
			Calculations for brake mean	1.3.6	G													
			effective pressure															
			Torsional vibration stress analysis	1.3.7	G													
			computations															
			Capacity calculations for batteries	1.3.8	G													
			SD-06 Test Reports															
			Acceptance checks and tests	3.5.1	G													
			Functional acceptance tests	3.5.2	G													
			Functional acceptance test	3.4.4	G													
			procedure															
			SD-07 Certificates															
			Vibration isolation system	1.5.2	G													
			Fuel system	1.5.3	G													
			Start-up engineer	3.3	G													
			Instructor's	3.6.1	G													
			SD-09 Manufacturer’s Field															
			Reports															
			Engine tests	2.6.1	G													

SUBMITTAL REGISTER

CONTRACT NO.

TITLE AND LOCATION
Djibouti Fuel Storage Facility

CONTRACTOR

ACTIVITY NO	TRANSMITTAL NO	SPEC SECT	DESCRIPTION ITEM SUBMITTED	PARAGRAPH #	CLASSIFICATION	GOVT OR A/E REVWR	CONTRACTOR: SCHEDULE DATES			CONTRACTOR ACTION			APPROVING AUTHORITY					
							SUBMIT	APPROVAL NEEDED BY	MATERIAL NEEDED BY	ACTION CODE	DATE OF ACTION	DATE FWD TO APPR AUTH/ DATE RCD FROM CONTR	DATE FWD TO OTHER REVIEWER	DATE RCD FROM OTH REVIEWER	ACTION CODE	DATE OF ACTION	MAILED TO CONTR/ DATE RCD FRM APPR AUTH	REMARKS
(a)	(b)	(c)	(d)	(e)	(f)		(g)	(h)	(i)	(j)	(k)	(l)	(m)	(n)	(o)	(p)	(q)	(r)
		26 32 13.00 20	Generator tests	2.6.2	G													
			Assembled engine-generator set	2.6.3	G													
			tests															
			SD-10 Operation and Maintenance															
			Data															
			Diesel engine-generator set	2.1	G													
			Auxiliary systems and equipment	2.2	G													
			Preliminary assembled operation	3.4.3	G													
			and maintenance manuals															
			SD-11 Closeout Submittals															
			Posted operating instructions	1.8.2	G													
			Training plan	3.6.2	G													
		26 36 23.00 20	SD-02 Shop Drawings															
			Automatic Transfer Switch	1.4.2	G													
			Drawings															
			SD-03 Product Data															
			Automatic Transfer Switches	2.1	G													
			SD-06 Test Reports															
			Acceptance Checks and Tests	3.3.1	G													
			Functional Acceptance Tests	3.3.2	G													
			SD-07 Certificates															
			Proof of Listing	1.4.1	G													
			SD-10 Operation and Maintenance															
			Data															
			Automatic Transfer Switches	2.1	G													
		26 41 00	SD-02 Shop Drawings															

SUBMITTAL REGISTER

CONTRACT NO.

TITLE AND LOCATION
Djibouti Fuel Storage Facility

CONTRACTOR

ACTIVITY NO	TRANSMITTAL NO	SPEC SECT	DESCRIPTION ITEM SUBMITTED	PARAGRAPH #	CLASSIFICATION	GOVT OR A/E REVWR	CONTRACTOR: SCHEDULE DATES			CONTRACTOR ACTION			APPROVING AUTHORITY					
							SUBMIT	APPROVAL NEEDED BY	MATERIAL NEEDED BY	ACTION CODE	DATE OF ACTION	DATE FWD TO APPR AUTH/ DATE RCD FROM CONTR	DATE FWD TO OTHER REVIEWER	DATE RCD FROM OTH REVIEWER	ACTION CODE	DATE OF ACTION	MAILED TO CONTR/ DATE RCD FRM APPR AUTH	REMARKS
(a)	(b)	(c)	(d)	(e)	(f)		(g)	(h)	(i)	(j)	(k)	(l)	(m)	(n)	(o)	(p)	(q)	(r)
		26 41 00	Overall lightning protection	1.4.1.1	G													
			system															
			Each major component	1.4.1.2	G													
			SD-06 Test Reports															
			Lightning Protection and	1.4.3	G													
			Grounding System Test Plan															
			Lightning Protection and	3.5.1	G													
			Grounding System Test															
			SD-07 Certificates															
			Lightning Protection System	1.2.3	G													
			Installers Documentation															
			Component UL Listed and	1.4.2	G													
			Labeled															
			Lightning protection system	1.4.4	G													
			inspection certificate															
			Roof manufacturer's warranty	3.1.1	G													
		26 42 14.00 10	SD-02 Shop Drawings															
			Drawings	1.3.7	G													
			Contractor's Modifications	1.3.2	G													
			SD-03 Product Data															
			Equipment	1.3	G													
			SD-06 Test Reports															
			Tests and Measurements	3.5	G													
			Contractor's Modifications	1.3.2	G													
			SD-07 Certificates															
			Cathodic Protection System	1.3														

SUBMITTAL REGISTER

CONTRACT NO.

TITLE AND LOCATION
Djibouti Fuel Storage Facility

CONTRACTOR

ACTIVITY NO	TRANSMITTAL NO	SPEC SECT	DESCRIPTION ITEM SUBMITTED	PARAGRAPH #	CLASSIFICATION	GOVT OR A/E REVWR	CONTRACTOR: SCHEDULE DATES			CONTRACTOR ACTION			APPROVING AUTHORITY				MAILED TO CONTR/	
							SUBMIT	APPROVAL NEEDED BY	MATERIAL NEEDED BY	ACTION CODE	DATE OF ACTION	DATE FWD TO APPR AUTH/ DATE RCD FROM CONTR	DATE FWD TO OTHER REVIEWER	DATE RCD FROM OTH REVIEWER	ACTION CODE	DATE OF ACTION	DATE RCD FRM APPR AUTH	REMARKS
(a)	(b)	(c)	(d)	(e)	(f)		(g)	(h)	(i)	(j)	(k)	(l)	(m)	(n)	(o)	(p)	(q)	(r)
		26 42 14.00 10	Services of 'Corrosion Expert'	1.3.1	G													
			SD-10 Operation and Maintenance															
			Data															
			Cathodic Protection System	1.3														
			Training Course	3.6														
		26 51 00	SD-03 Product Data															
			LED lighting fixtures	2.1	G													
			LED electronic drivers	2.1.1	G													
			High-intensity-discharge (HID)	2.2	G													
			lighting fixtures															
			HID ballasts	2.2.1	G													
			Metal-halide lamps	2.2.2	G													
			Photocell switch	2.7	G													
			Exit signs	2.8	G													
			Emergency lighting equipment	2.9	G													
			Occupancy sensors	2.10	G													
			Energy Efficiency	1.6.2.3														
			SD-06 Test Reports															
			Operating test	3.3														
			SD-10 Operation and Maintenance															
			Data															
			Lighting Control System	1.4.1	G													
		26 56 00	SD-01 Preconstruction Submittals															
			Photometric Plan	1.5.2	G													
			LED Luminaire Warranty	1.7.1	G													
			SD-02 Shop Drawings															

SUBMITTAL REGISTER

CONTRACT NO.

TITLE AND LOCATION
Djibouti Fuel Storage Facility

CONTRACTOR

ACTIVITY NO	TRANSMITTAL NO	SPEC SECT	DESCRIPTION ITEM SUBMITTED	PARAGRAPH #	CLASSIFICATION	GOVT OR A/E REVWR	CONTRACTOR: SCHEDULE DATES			CONTRACTOR ACTION			APPROVING AUTHORITY					
							SUBMIT	APPROVAL NEEDED BY	MATERIAL NEEDED BY	ACTION CODE	DATE OF ACTION	DATE FWD TO APPR AUTH/ DATE RCD FROM CONTR	DATE FWD TO OTHER REVIEWER	DATE RCD FROM OTH REVIEWER	ACTION CODE	DATE OF ACTION	MAILED TO CONTR/ DATE RCD FRM APPR AUTH	REMARKS
(a)	(b)	(c)	(d)	(e)	(f)		(g)	(h)	(i)	(j)	(k)	(l)	(m)	(n)	(o)	(p)	(q)	(r)
		26 56 00	Luminaire drawings	1.5.1.1	G													
			Poles	1.5.1.2	G													
			SD-03 Product Data															
			LED Luminaires	2.2	G													
			Luminaire Light Sources	2.2.2	G													
			Lighting contactor	2.4.3	G													
			Time switch	2.4.2	G													
			Photocell	2.4.1	G													
			Aluminum poles	2.5.1	G													
			Steel poles	2.5.2	G													
			Brackets	2.6														
			Obstruction Marker Luminaires	2.3	G													
			SD-05 Design Data															
			Design Data for luminaires	1.5.3	G													
			SD-06 Test Reports															
			LED Luminaire - IES LM-79 Test	1.5.4	G													
			Report															
			LED Light Source - IES LM-80	1.5.5	G													
			Test Report															
			Operating test	3.2														
			SD-07 Certificates															
			Luminaire Useful Life Certificate	1.7.1	G													
		27 10 00	SD-02 Shop Drawings															
			Telecommunications drawings	1.6.1.1	G													
			Telecommunications Space	1.6.1.2	G													
			Drawings															

SUBMITTAL REGISTER

CONTRACT NO.

TITLE AND LOCATION
Djibouti Fuel Storage Facility

CONTRACTOR

ACTIVITY NO	TRANSMITTAL NO	SPEC SECT	DESCRIPTION ITEM SUBMITTED	PARAGRAPH #	CLASSIFICATION	GOVT OR A/E REVWR	CONTRACTOR: SCHEDULE DATES			CONTRACTOR ACTION			APPROVING AUTHORITY					
							SUBMIT	APPROVAL NEEDED BY	MATERIAL NEEDED BY	ACTION CODE	DATE OF ACTION	DATE FWD TO APPR AUTH/ DATE RCD FROM CONTR	DATE FWD TO OTHER REVIEWER	DATE RCD FROM OTH REVIEWER	ACTION CODE	DATE OF ACTION	MAILED TO CONTR/ DATE RCD FRM APPR AUTH	REMARKS
(a)	(b)	(c)	(d)	(e)	(f)		(g)	(h)	(i)	(j)	(k)	(l)	(m)	(n)	(o)	(p)	(q)	(r)
		27 10 00	SD-03 Product Data															
			Telecommunications cabling	2.3	G													
			Patch panels	2.4.5	G													
			Telecommunications	2.5	G													
			outlet/connector assemblies															
			Equipment support frame	2.4.2	G													
			Connector blocks	2.4.3	G													
			SD-06 Test Reports															
			Telecommunications cabling	3.5.1	G													
			testing															
			SD-07 Certificates															
			Telecommunications Contractor	1.6.2.1	G													
			Key Personnel	1.6.2.2	G													
			Manufacturer Qualifications	1.6.2.3	G													
			Test plan	1.6.3	G													
			SD-09 Manufacturer’s Field															
			Reports															
			Factory reel tests	2.10.1	G													
			SD-10 Operation and Maintenance															
			Data															
			Telecommunications cabling and	1.10.1	G													
			pathway system															
			SD-11 Closeout Submittals															
			Record Documentation	1.10.2	G													
		28 31 63.00 20	SD-02 Shop Drawings															
			Battery power calculations	1.5.1														

SUBMITTAL REGISTER

CONTRACT NO.

TITLE AND LOCATION
Djibouti Fuel Storage Facility

CONTRACTOR

ACTIVITY NO	TRANSMITTAL NO	SPEC SECT	DESCRIPTION ITEM SUBMITTED	PARAGRAPH #	CLASSIFICATION	GOVT OR A/E REVWR	CONTRACTOR: SCHEDULE DATES			CONTRACTOR ACTION			APPROVING AUTHORITY					
							SUBMIT	APPROVAL NEEDED BY	MATERIAL NEEDED BY	ACTION CODE	DATE OF ACTION	DATE FWD TO APPR AUTH/ DATE RCD FROM CONTR	DATE FWD TO OTHER REVIEWER	DATE RCD FROM OTH REVIEWER	ACTION CODE	DATE OF ACTION	MAILED TO CONTR/ DATE RCD FRM APPR AUTH	REMARKS
(a)	(b)	(c)	(d)	(e)	(f)		(g)	(h)	(i)	(j)	(k)	(l)	(m)	(n)	(o)	(p)	(q)	(r)
		28 31 63.00 20	SD-03 Product Data															
			Fire alarm control panel (FACP)	2.2.12	G													
			Terminal cabinets	2.2.11.2	G													
			Manual stations	2.2.13	G													
			Transmitters	2.2.17	G													
			Batteries	2.2.10.1	G													
			Battery chargers	2.2.10.3	G													
			Smoke sensors	2.2.7	G													
			Thermal sensors	2.2.8	G													
			Wiring	2.2.11.3	G													
			Wiring	2.4	G													
			Notification appliances	2.2.14	G													
			Addressable interface devices	2.2.5	G													
			Waterflow detectors	2.2.16	G													
			Tamper switches	2.2.15	G													
			Smoke sensor testing procedures	2.2.7.2	G													
			Radio transmitter and interface	2.2.17.1	G													
			panels															
			SD-07 Certificates															
			Qualifications of installer	1.5.2														
			SD-10 Operation and Maintenance															
			Data															
			INTERIOR FIRE ALARM	2.2	G													
			SYSTEM															
			Record drawing software	1.5.3														
		28 31 76	SD-02 Shop Drawings															

SUBMITTAL REGISTER

CONTRACT NO.

TITLE AND LOCATION
Djibouti Fuel Storage Facility

CONTRACTOR

ACTIVITY NO	TRANSMITTAL NO	SPEC SECT	DESCRIPTION ITEM SUBMITTED	PARAGRAPH #	CLASSIFICATION	GOVT OR A/E REVWR	CONTRACTOR: SCHEDULE DATES			CONTRACTOR ACTION			APPROVING AUTHORITY				MAILED TO CONTR/	
							SUBMIT	APPROVAL NEEDED BY	MATERIAL NEEDED BY	ACTION CODE	DATE OF ACTION	DATE FWD TO APPR AUTH/ DATE RCD FROM CONTR	DATE FWD TO OTHER REVIEWER	DATE RCD FROM OTH REVIEWER	ACTION CODE	DATE OF ACTION	DATE RCD FRM APPR AUTH	REMARKS
(a)	(b)	(c)	(d)	(e)	(f)		(g)	(h)	(i)	(j)	(k)	(l)	(m)	(n)	(o)	(p)	(q)	(r)
		28 31 76	Nameplates	2.1.2	G													
			Wiring Diagrams	3.2.1	G													
			System Layout	1.2.1	G													
			System Operation	2.3	G													
			Notification Appliances	2.16	G													
			Amplifiers	2.14	G													
			SD-03 Product Data															
			Technical Data And Computer	1.6	G													
			Software															
			Fire Alarm Control Unit and Mass	2.13	G													
			Notification Control Unit (FMCP)															
			Manual stations	2.15	G													
			Transmitters	2.19	G													
			Batteries	2.12.1	G													
			Battery chargers	2.12.2	G													
			Smoke sensors	2.10	G													
			Notification appliances	2.16	G													
			Addressable interface devices	2.7	G													
			Amplifiers	2.14	G													
			Tone generators	2.14	G													
			Digitalized voice generators	2.14	G													
			Radio transmitter and interface	2.19.1	G													
			panels															
			Local Operating Console (LOC)	1.4.4	G													
			SD-05 Design Data															
			Battery power	2.12.1.2	G													

SUBMITTAL REGISTER

CONTRACT NO.

TITLE AND LOCATION
Djibouti Fuel Storage Facility

CONTRACTOR

ACTIVITY NO	TRANSMITTAL NO	SPEC SECT	DESCRIPTION ITEM SUBMITTED	PARAGRAPH #	CLASSIFICATION	GOVT OR A/E REVWR	CONTRACTOR: SCHEDULE DATES			CONTRACTOR ACTION			APPROVING AUTHORITY					
							SUBMIT	APPROVAL NEEDED BY	MATERIAL NEEDED BY	ACTION CODE	DATE OF ACTION	DATE FWD TO APPR AUTH/ DATE RCD FROM CONTR	DATE FWD TO OTHER REVIEWER	DATE RCD FROM OTH REVIEWER	ACTION CODE	DATE OF ACTION	MAILED TO CONTR/ DATE RCD FRM APPR AUTH	REMARKS
(a)	(b)	(c)	(d)	(e)	(f)		(g)	(h)	(i)	(j)	(k)	(l)	(m)	(n)	(o)	(p)	(q)	(r)
		28 31 76	Battery chargers	2.12.2	G													
			SD-06 Test Reports															
			Field Quality Control	3.6														
			Testing Procedures	3.6.1	G													
			Smoke sensor testing	2.10.2	G													
			SD-07 Certificates															
			Installer	1.7.1.4														
			Formal Inspection and Tests	3.6.2.2														
			Final Testing	3.6.2.3														
			SD-09 Manufacturer's Field															
			Reports															
			System Operation	2.3	G													
			Fire Alarm/Mass Notification	1.7.2.2														
			System															
			SD-10 Operation and Maintenance															
			Data															
			Operation and Maintenance	3.9	G													
			(O&M) Instructions															
			Instruction of Government	3.7	G													
			Employees															
			SD-11 Closeout Submittals															
			As-Built Drawings	3.6.2.4														
		31 05 19	SD-03 Product Data															
			Thread	2.1.2														
			Manufacturing Quality Control	2.2														
			Sampling and Testing															

SUBMITTAL REGISTER

CONTRACT NO.

TITLE AND LOCATION
Djibouti Fuel Storage Facility

CONTRACTOR

ACTIVITY NO	TRANSMITTAL NO	SPEC SECT	DESCRIPTION ITEM SUBMITTED	PARAGRAPH #	CLASSIFICATION	GOVT OR A/E REVWR	CONTRACTOR: SCHEDULE DATES			CONTRACTOR ACTION			APPROVING AUTHORITY					
							SUBMIT	APPROVAL NEEDED BY	MATERIAL NEEDED BY	ACTION CODE	DATE OF ACTION	DATE FWD TO APPR AUTH/ DATE RCD FROM CONTR	DATE FWD TO OTHER REVIEWER	DATE RCD FROM OTH REVIEWER	ACTION CODE	DATE OF ACTION	MAILED TO CONTR/ DATE RCD FRM APPR AUTH	REMARKS
(a)	(b)	(c)	(d)	(e)	(f)		(g)	(h)	(i)	(j)	(k)	(l)	(m)	(n)	(o)	(p)	(q)	(r)
		31 05 19	SD-04 Samples															
			Quality Assurance Samples and	3.1														
			Tests															
			SD-07 Certificates															
			Geotextile	2.1.1														
		31 05 20	SD-03 Product Data															
			Sampling and Testing	2.2														
			Penetrations	3.1.4														
			Construction Quality Control (QC)	1.4														
			Laboratory															
			SD-04 Samples															
			Geosynthetic Drainage Layer	2.1														
			Seams and Overlaps	3.1.3														
			SD-06 Test Reports															
			Sampling and Testing	2.2														
			Geosynthetic Drainage Layer	2.1														
		31 23 00.00 20	SD-01 Preconstruction Submittals															
			Shoring and Sheeting Plan	1.7.1														
			Dewatering work plan	1.7.2														
			SD-06 Test Reports															
			Borrow Site Testing	1.6	G													
			Fill and backfill	3.13.2.1														
			Select material	3.13.2.2														
			Porous fill	3.13.2.3														
			Density tests	3.13.2.4														
		31 32 11	SD-01 Preconstruction Submittals															

SUBMITTAL REGISTER

CONTRACT NO.

TITLE AND LOCATION
Djibouti Fuel Storage Facility

CONTRACTOR

ACTIVITY NO	TRANSMITTAL NO	SPEC SECT	DESCRIPTION ITEM SUBMITTED	PARAGRAPH #	CLASSIFICATION	GOVT OR A/E REVWR	CONTRACTOR: SCHEDULE DATES			CONTRACTOR ACTION			APPROVING AUTHORITY				MAILED TO CONTR/ DATE RCD FRM APPR AUTH	REMARKS
							SUBMIT	APPROVAL NEEDED BY	MATERIAL NEEDED BY	ACTION CODE	DATE OF ACTION	DATE FWD TO APPR AUTH/ DATE RCD FROM CONTR	DATE FWD TO OTHER REVIEWER	DATE RCD FROM OTH REVIEWER	ACTION CODE	DATE OF ACTION		
(a)	(b)	(c)	(d)	(e)	(f)		(g)	(h)	(i)	(j)	(k)	(l)	(m)	(n)	(o)	(p)	(q)	(r)
		31 32 11	Work sequence schedule	1.6	G													
			Erosion control plan	1.6	G													
			SD-02 Shop Drawings															
			Maintenance Record	3.4														
			SD-03 Product Data															
			Local/Regional Materials	1.4.4.1														
			Synthetic Soil Binders	2.2.1														
			Recycled Plastic	2.1														
			Gravel	2.5														
			Gravel	2.5														
			Equipment	1.1														
			Finished Grade	3.1.1														
			Erosion Control Blankets	2.3														
			SD-04 Samples															
			Erosion control blankets	2.3														
			SD-06 Test Reports															
			Erosion Control Blankets	2.3														
			Sand	2.5														
			Gravel	2.5														
			Gravel	2.5														
			SD-07 Certificates															
			Installer's Qualification	1.4.1														
			Recycled Plastic	2.1														
			SD-10 Operation and Maintenance															
			Data															
			Maintenance Instructions	3.4.2														

SUBMITTAL REGISTER

CONTRACT NO.

TITLE AND LOCATION
Djibouti Fuel Storage Facility

CONTRACTOR

ACTIVITY NO	TRANSMITTAL NO	SPEC SECT	DESCRIPTION ITEM SUBMITTED	PARAGRAPH #	CLASSIFICATION	GOVT OR A/E REVWR	CONTRACTOR: SCHEDULE DATES			CONTRACTOR ACTION			APPROVING AUTHORITY				MAILED TO CONTR/ DATE RCD FRM APPR AUTH	REMARKS
							SUBMIT	APPROVAL NEEDED BY	MATERIAL NEEDED BY	ACTION CODE	DATE OF ACTION	DATE FWD TO APPR AUTH/ DATE RCD FROM CONTR	DATE FWD TO OTHER REVIEWER	DATE RCD FROM OTH REVIEWER	ACTION CODE	DATE OF ACTION		
(a)	(b)	(c)	(d)	(e)	(f)		(g)	(h)	(i)	(j)	(k)	(l)	(m)	(n)	(o)	(p)	(q)	(r)
		31 32 11	SD-11 Closeout Submittals															
			Local/Regional Materials	1.4.4.1														
			Recycled Plastic	2.1														
			Gravel	2.5														
			Gravel	2.5														
		32 01 19	SD-03 Product Data															
			Manufacturer's	3.1.2.1	G													
			Recommendations															
			Equipment	3.1														
			SD-04 Samples															
			Materials	1.3.1	G													
			SD-06 Test Reports															
			Certified copies of the test reports	1.3.1	G													
		32 11 23	SD-03 Product Data															
			Plant, Equipment, and Tools	2.1														
			SD-06 Test Reports															
			Sampling and Testing	1.4	G													
			Field Density Tests	1.4.2.4	G													
		32 12 21	SD-06 Test Reports															
			Tests	3.9.1														
		32 17 23.00 20	SD-03 Product Data															
			Reflective media for roads and	2.1.2														
			streets															
			Paints for roads and streets	2.1.1														
			Equipment	1.5	G													
			SD-06 Test Reports															

SUBMITTAL REGISTER

CONTRACT NO.

TITLE AND LOCATION
Djibouti Fuel Storage Facility

CONTRACTOR

ACTIVITY NO	TRANSMITTAL NO	SPEC SECT	DESCRIPTION ITEM SUBMITTED	PARAGRAPH #	CLASSIFICATION	GOVT OR A/E REVWR	CONTRACTOR: SCHEDULE DATES			CONTRACTOR ACTION			APPROVING AUTHORITY					
							SUBMIT	APPROVAL NEEDED BY	MATERIAL NEEDED BY	ACTION CODE	DATE OF ACTION	DATE FWD TO APPR AUTH/ DATE RCD FROM CONTR	DATE FWD TO OTHER REVIEWER	DATE RCD FROM OTH REVIEWER	ACTION CODE	DATE OF ACTION	MAILED TO CONTR/ DATE RCD FRM APPR AUTH	REMARKS
(a)	(b)	(c)	(d)	(e)	(f)		(g)	(h)	(i)	(j)	(k)	(l)	(m)	(n)	(o)	(p)	(q)	(r)
		32 17 23.00 20	Reflective media for roads and	2.1.2														
			streets															
			Paints for roads and streets	2.1.1														
			SD-07 Certificates															
			Paints for roads and streets	2.1.1														
			Construction equipment list	1.5														
			SD-08 Manufacturer's Instructions															
			Paints for roads and streets	2.1.1														
		32 31 13.53	SD-02 Shop Drawings															
			Fence Installation	1.3.2														
			Fence Installation	3.1														
			Installation Drawings	1.3.2														
			Location of gate, corner, end, and	1.3.2														
			pull posts															
			Gate Assembly	1.3.2														
			Gate Assembly	2.7.1														
			Gate Assembly	2.7.1														
			Turnstiles	1.3.2														
			Turnstiles	2.8														
			Gate Hardware and Accessories	1.3.2														
			Gate Hardware and Accessories	2.7.3														
			SD-03 Product Data															
			Fence Installation	1.3.2														
			Fence Installation	3.1														
			Gate Assembly	1.3.2														
			Gate Assembly	2.7.1														

SUBMITTAL REGISTER

CONTRACT NO.

TITLE AND LOCATION
Djibouti Fuel Storage Facility

CONTRACTOR

ACTIVITY NO	TRANSMITTAL NO	SPEC SECT	DESCRIPTION ITEM SUBMITTED	PARAGRAPH #	CLASSIFICATION	GOVT OR A/E REVWR	CONTRACTOR: SCHEDULE DATES			CONTRACTOR ACTION			APPROVING AUTHORITY					
							SUBMIT	APPROVAL NEEDED BY	MATERIAL NEEDED BY	ACTION CODE	DATE OF ACTION	DATE FWD TO APPR AUTH/ DATE RCD FROM CONTR	DATE FWD TO OTHER REVIEWER	DATE RCD FROM OTH REVIEWER	ACTION CODE	DATE OF ACTION	MAILED TO CONTR/ DATE RCD FRM APPR AUTH	REMARKS
(a)	(b)	(c)	(d)	(e)	(f)		(g)	(h)	(i)	(j)	(k)	(l)	(m)	(n)	(o)	(p)	(q)	(r)
		32 31 13.53	Gate Assembly	2.7.1														
			Gate Hardware and Accessories	1.3.2														
			Gate Hardware and Accessories	2.7.3														
			SD-04 Samples															
			Fabric	2.1.1														
			Posts	2.2														
			Post Caps	2.2.2														
			Braces	2.3														
			Line Posts	2.2.1														
			Bottom Rail	2.3														
			Tension Wire	2.2.2														
			Barbed Wire	2.4.2														
			Barbed Wire Supporting Arms	2.2.2														
			Barbed Tape	2.5														
			Stretcher Bars	2.1.1														
			Gate Posts	2.1.1														
			Gate Hardware and Accessories	1.3.2														
			Gate Hardware and Accessories	2.7.3														
			Turnstiles	1.3.2														
			Turnstiles	2.8														
			Padlocks	2.9														
			Wire Ties	2.4.1														
			SD-06 Test Reports															
			zinc coating	1.3.1														
			aluminum alloy coating	1.3.1														
			SD-07 Certificates															

SUBMITTAL REGISTER

CONTRACT NO.

TITLE AND LOCATION
Djibouti Fuel Storage Facility

CONTRACTOR

ACTIVITY NO	TRANSMITTAL NO	SPEC SECT	DESCRIPTION ITEM SUBMITTED	PARAG # RAPH	CLASSIFICATION	GOVT OR A/E REVWR	CONTRACTOR: SCHEDULE DATES			CONTRACTOR ACTION			APPROVING AUTHORITY					
							SUBMIT	APPROVAL NEEDED BY	MATERIAL NEEDED BY	ACTION CODE	DATE OF ACTION	DATE FWD TO APPR AUTH/ DATE RCD FROM CONTR	DATE FWD TO OTHER REVIEWER	DATE RCD FROM OTH REVIEWER	ACTION CODE	DATE OF ACTION	MAILED TO CONTR/ DATE RCD FRM APPR AUTH	REMARKS
(a)	(b)	(c)	(d)	(e)	(f)		(g)	(h)	(i)	(j)	(k)	(l)	(m)	(n)	(o)	(p)	(q)	(r)
		32 31 13.53	Chain Link Fence	2.2.1														
			Reports	1.3.1														
			Reports	1.3.1														
			Zinc Coating	1.3.1														
			aluminum alloy coating	1.3.1														
			Fabric	2.1.1														
			Barbed Wire	2.4.2														
			Stretcher Bars	2.1.1														
			Gate Hardware and Accessories	1.3.2														
			Gate Hardware and Accessories	2.7.3														
			Concrete	2.6														
			GATE OPERATOR	2.10														
			SD-08 Manufacturer’s Instructions															
			Fence Installation	1.3.2														
			Fence Installation	3.1														
			Gate Assembly	1.3.2														
			Gate Assembly	2.7.1														
			Gate Assembly	2.7.1														
			Accessories	1.3.1														
			SD-10 Operation and Maintenance															
			Data															
			Electro-Mechanical Locks	2.11														
			Gate Operator	2.10														
			operating and maintenance	3.6														
			instructions															
		33 08 53	SD-01 Preconstruction Submittals															

SUBMITTAL REGISTER

CONTRACT NO.

TITLE AND LOCATION
Djibouti Fuel Storage Facility

CONTRACTOR

ACTIVITY NO	TRANSMITTAL NO	SPEC SECT	DESCRIPTION ITEM SUBMITTED	PARAGRAPH #	CLASSIFICATION	GOVT OR A/E REVWR	CONTRACTOR: SCHEDULE DATES			CONTRACTOR ACTION			APPROVING AUTHORITY					
							SUBMIT	APPROVAL NEEDED BY	MATERIAL NEEDED BY	ACTION CODE	DATE OF ACTION	DATE FWD TO APPR AUTH/ DATE RCD FROM CONTR	DATE FWD TO OTHER REVIEWER	DATE RCD FROM OTH REVIEWER	ACTION CODE	DATE OF ACTION	MAILED TO CONTR/ DATE RCD FRM APPR AUTH	REMARKS
(a)	(b)	(c)	(d)	(e)	(f)		(g)	(h)	(i)	(j)	(k)	(l)	(m)	(n)	(o)	(p)	(q)	(r)
		33 08 53	System Start-up Plan	1.1.1	G													
			SD-06 Test Reports															
			Test Reports	1.4.1														
			Final Reports	1.3.1														
			Equipment Tests	3.5	G													
			SD-11 Closeout Submittals															
			Certification of Entire System	1.4.2														
		33 09 55	SD-02 Shop Drawings															
			Shop Drawing	3.5.1	G													
			SD-03 Product Data															
			Pump Control Panel (PCP) and	2.1	G													
			Components															
			Pump Control Panel (PCP) and	3.1	G													
			Components															
			Programmable Logical Controller	2.2	G													
			(PLC) Hardware and Software															
			Personal Computer (PC)	2.1.17	G													
			Laptop Computer	2.1.16	G													
			FCC Computer	2.1.19	G													
			Printer	2.1.18	G													
			Graphics Display Panel	2.3	G													
			Graphics Display Screen	3.4	G													
			Control Wiring Data Lists	3.1.2.2	G													
			SD-06 Test Reports															
			Testing Plan	3.5.2	G													

SUBMITTAL REGISTER

CONTRACT NO.

TITLE AND LOCATION
Djibouti Fuel Storage Facility

CONTRACTOR

ACTIVITY NO	TRANSMITTAL NO	SPEC SECT	DESCRIPTION ITEM SUBMITTED	PARAGRAPH #	CLASSIFICATION	GOVT OR A/E REVWR	CONTRACTOR: SCHEDULE DATES			CONTRACTOR ACTION			APPROVING AUTHORITY					
							SUBMIT	APPROVAL NEEDED BY	MATERIAL NEEDED BY	ACTION CODE	DATE OF ACTION	DATE FWD TO APPR AUTH/ DATE RCD FROM CONTR	DATE FWD TO OTHER REVIEWER	DATE RCD FROM OTH REVIEWER	ACTION CODE	DATE OF ACTION	MAILED TO CONTR/ DATE RCD FRM APPR AUTH	REMARKS
(a)	(b)	(c)	(d)	(e)	(f)		(g)	(h)	(i)	(j)	(k)	(l)	(m)	(n)	(o)	(p)	(q)	(r)
		33 09 55	Certified Pump Control Panel	3.1.3														
			(PCP)															
			Record of Test	3.5.2														
			SD-07 Certificates															
			Experience and Qualifications	1.7	G													
			SD-10 Operation and Maintenance															
			Data															
			Plan for Instructing Personnel	3.5.3	G													
			Operation and Maintenance	1.5	G													
			Manuals															
			Tools and Spare Parts	1.6														
		33 11 00	SD-03 Product Data															
			Piping Materials	2.1.1														
			Water distribution main	2.1														
			Water service line	2.2														
			Hydrants	2.1.2.2														
			Indicator posts	2.1.2.3														
			Corporation stops	2.2.2.1														
			Valve boxes	2.1.2.4														
			Valve boxes	2.2.2.11														
			SD-06 Test Reports															
			Disinfection	2.2.2.15	G													
			SD-07 Certificates															
			Water distribution main	2.1														
			Water service line	2.2														
			lining	2.1.1.1														

SUBMITTAL REGISTER

CONTRACT NO.

TITLE AND LOCATION
Djibouti Fuel Storage Facility

CONTRACTOR

ACTIVITY NO	TRANSMITTAL NO	SPEC SECT	DESCRIPTION ITEM SUBMITTED	PARAGRAPH #	CLASSIFICATION	GOVT OR A/E REVWR	CONTRACTOR: SCHEDULE DATES			CONTRACTOR ACTION			APPROVING AUTHORITY					
							SUBMIT	APPROVAL NEEDED BY	MATERIAL NEEDED BY	ACTION CODE	DATE OF ACTION	DATE FWD TO APPR AUTH/ DATE RCD FROM CONTR	DATE FWD TO OTHER REVIEWER	DATE RCD FROM OTH REVIEWER	ACTION CODE	DATE OF ACTION	MAILED TO CONTR/ DATE RCD FRM APPR AUTH	REMARKS
(a)	(b)	(c)	(d)	(e)	(f)		(g)	(h)	(i)	(j)	(k)	(l)	(m)	(n)	(o)	(p)	(q)	(r)
		33 11 00	lining	2.1.1.1														
			hydrants	2.1.2.2														
			Displacement Type Meters	2.2.2.13														
			SD-08 Manufacturer's Instructions															
			Delivery, storage, and handling	1.4														
			Installation	3.1.1														
		33 30 00	SD-01 Preconstruction Submittals															
			Existing Conditions	1.6														
			SD-02 Shop Drawings															
			Drawings	1.4.2														
			Precast concrete manhole	2.2.1														
			Metal items	2.2.4														
			Frames, covers, and gratings	2.2.4.1														
			SD-03 Product Data															
			Pipeline materials	2.1														
			SD-06 Test Reports															
			Reports	2.3														
			SD-07 Certificates															
			Gaskets	2.1.1.2														
		33 40 00	SD-03 Product Data															
			Placing Pipe	3.3														
			SD-04 Samples															
			Pipe for Culverts and Storm	2.1														
			Drains															
			SD-07 Certificates															
			Resin Certification	2.1.3														

SUBMITTAL REGISTER

CONTRACT NO.

TITLE AND LOCATION
Djibouti Fuel Storage Facility

CONTRACTOR

ACTIVITY NO	TRANSMITTAL NO	SPEC SECT	DESCRIPTION ITEM SUBMITTED	PARAGRAPH #	CLASSIFICATION	GOVT OR A/E REVWR	CONTRACTOR: SCHEDULE DATES			CONTRACTOR ACTION			APPROVING AUTHORITY					
							SUBMIT	APPROVAL NEEDED BY	MATERIAL NEEDED BY	ACTION CODE	DATE OF ACTION	DATE FWD TO APPR AUTH/ DATE RCD FROM CONTR	DATE FWD TO OTHER REVIEWER	DATE RCD FROM OTH REVIEWER	ACTION CODE	DATE OF ACTION	MAILED TO CONTR/ DATE RCD FRM APPR AUTH	REMARKS
(a)	(b)	(c)	(d)	(e)	(f)		(g)	(h)	(i)	(j)	(k)	(l)	(m)	(n)	(o)	(p)	(q)	(r)
		33 40 00	Pipeline Testing	3.7														
			Hydrostatic Test on Watertight	2.5														
			Joints															
			Determination of Density	3.6.5														
			Frame and Cover for Gratings	2.3.4														
		33 52 43.11	SD-02 Shop Drawings															
			Venturi Tubes	2.4.3	G													
			Operating Tank Vent	2.7	G													
			Pressure Indicating Transmitters	2.4.1	G													
			Flow Switches	2.4.2	G													
			Differential Pressure Indicating	2.4.4	G													
			Transmitters															
			Pressure Sensor	2.4.5	G													
			Operating Tank Level Switches	2.6	G													
			SD-03 Product Data															
			Operating Tank Vent	2.7	G													
			Operating Tank Level Indicator	2.5	G													
			Venturi Tubes	2.4.3	G													
			Pressure Indicating Transmitters	2.4.1	G													
			Flow Switches	2.4.2	G													
			Differential Pressure Indicating	2.4.4	G													
			Transmitters															
			Pressure Sensor	2.4.5	G													
			Operating Tank Level Switches	2.6	G													
			SD-07 Certificates															
			System Supplier	1.4	G													

SUBMITTAL REGISTER

CONTRACT NO.

TITLE AND LOCATION
Djibouti Fuel Storage Facility

CONTRACTOR

ACTIVITY NO	TRANSMITTAL NO	SPEC SECT	DESCRIPTION ITEM SUBMITTED	PARAGRAPH #	CLASSIFICATION	GOVT OR A/E REVWR	CONTRACTOR: SCHEDULE DATES			CONTRACTOR ACTION			APPROVING AUTHORITY					
							SUBMIT	APPROVAL NEEDED BY	MATERIAL NEEDED BY	ACTION CODE	DATE OF ACTION	DATE FWD TO APPR AUTH/ DATE RCD FROM CONTR	DATE FWD TO OTHER REVIEWER	DATE RCD FROM OTH REVIEWER	ACTION CODE	DATE OF ACTION	MAILED TO CONTR/ DATE RCD FRM APPR AUTH	REMARKS
(a)	(b)	(c)	(d)	(e)	(f)		(g)	(h)	(i)	(j)	(k)	(l)	(m)	(n)	(o)	(p)	(q)	(r)
		33 52 43.11	SD-10 Operation and Maintenance															
			Data															
			Operating Tank Vent	2.7	G													
			Venturi Tubes	2.4.3	G													
			Pressure Indicating Transmitters	2.4.1	G													
			Flow Switches	2.4.2	G													
			Differential Pressure Indicating	2.4.4	G													
			Transmitters															
			Pressure Sensor	2.4.5	G													
			Operating Tank Level Switches	2.6	G													
		33 52 43.13	SD-03 Product Data															
			Fittings	2.1.5	G													
			Mechanically Adjustable	2.6.2	G													
			Segmented Elastomeric Sleeves															
			(Pipe Seal															
			Carbon Steel Piping	2.1.1	G													
			Stainless Steel Piping	2.1.2	G													
			Strainers	2.6.3	G													
			Lightning Surge Arrester	2.1.5.5	G													
			Fuel Sample Point Connections	2.6.6	G													
			Isolating Gasket Kits	2.1.5.5	G													
			Gaskets	2.1.7	G													
			Secondary Containment Piping	2.2	G													
			Single Point Leak Detection	2.3	G													
			System															
			Pressure Indicators	2.6.5	G													

SUBMITTAL REGISTER

CONTRACT NO.

TITLE AND LOCATION
Djibouti Fuel Storage Facility

CONTRACTOR

ACTIVITY NO	TRANSMITTAL NO	SPEC SECT	DESCRIPTION ITEM SUBMITTED	PARAGRAPH #	CLASSIFICATION	GOVT OR A/E REVWR	CONTRACTOR: SCHEDULE DATES			CONTRACTOR ACTION			APPROVING AUTHORITY					
							SUBMIT	APPROVAL NEEDED BY	MATERIAL NEEDED BY	ACTION CODE	DATE OF ACTION	DATE FWD TO APPR AUTH/ DATE RCD FROM CONTR	DATE FWD TO OTHER REVIEWER	DATE RCD FROM OTH REVIEWER	ACTION CODE	DATE OF ACTION	MAILED TO CONTR/ DATE RCD FRM APPR AUTH	REMARKS
(a)	(b)	(c)	(d)	(e)	(f)		(g)	(h)	(i)	(j)	(k)	(l)	(m)	(n)	(o)	(p)	(q)	(r)
		33 52 43.13	Flange Protectors	2.1.5.4	G													
			Bolts and Nuts	2.1.6	G													
			Ball Valves	2.4.1	G													
			Plug (Double Block and Bleed)	2.4.2	G													
			Valves															
			Silent Check Valves	2.4.3	G													
			Thermal Relief Valves	2.5	G													
			Pipe Hangers and Supports	2.6.4	G													
			Flanged Swivel Joints	2.6.7	G													
			Automatic Air Vent	2.7	G													
			SD-06 Test Reports															
			Pneumatic Test	3.9.1														
			Hydrostatic Test	3.9.1.2														
			SD-07 Certificates															
			Fittings	2.1.5														
			Isolating Gasket Kits	2.1.5.5														
			Survey final elevations	3.4.7														
			SD-10 Operation and Maintenance															
			Data															
			Operation and Maintenance	1.2	G													
			Manuals															
		33 52 43.14	SD-02 Shop Drawings															
			High Liquid Level Shut-Off Valve	2.3.1	G													
			(LCV-501 and LCV-601)															

SUBMITTAL REGISTER

CONTRACT NO.

TITLE AND LOCATION
Djibouti Fuel Storage Facility

CONTRACTOR

ACTIVITY NO	TRANSMITTAL NO	SPEC SECT	DESCRIPTION ITEM SUBMITTED	PARAGRAPH #	CLASSIFICATION	GOVT OR A/E REVWR	CONTRACTOR: SCHEDULE DATES			CONTRACTOR ACTION			APPROVING AUTHORITY					
							SUBMIT	APPROVAL NEEDED BY	MATERIAL NEEDED BY	ACTION CODE	DATE OF ACTION	DATE FWD TO APPR AUTH/ DATE RCD FROM CONTR	DATE FWD TO OTHER REVIEWER	DATE RCD FROM OTH REVIEWER	ACTION CODE	DATE OF ACTION	MAILED TO CONTR/ DATE RCD FRM APPR AUTH	REMARKS
(a)	(b)	(c)	(d)	(e)	(f)		(g)	(h)	(i)	(j)	(k)	(l)	(m)	(n)	(o)	(p)	(q)	(r)
		33 52 43.14	Non Surge Check Valve (CV-501,	2.3.2	G													
			CV-502, CV-503, CV-504, CV-601,															
			CV-602, CV-603, CV-604, CV-707)															
			Filter/Separator Control Valve	2.3.3														
			(FSCV-501, FSCV-601,															
			FSCV-PRT, FSCV-701,															
			FSCV-702, FSCV-703)															
			Bypass Pressure Control Valve	2.3.5	G													
			(BPCV-701)															
			Overfill Valve for Product	2.3.6	G													
			Recovery Tank (OV-707)															
			Truck Loading Control Valve	2.3.7	G													
			(TFCV-403, TFCV-404)															
			SD-03 Product Data															
			High Liquid Level Shut-Off Valve	2.3.1	G													
			(LCV-501 and LCV-601)															
			Non Surge Check Valve (CV-501,	2.3.2	G													
			CV-502, CV-503, CV-504, CV-601,															
			CV-602, CV-603, CV-604, CV-707)															
			Filter/Separator Control Valve	2.3.3	G													
			(FSCV-501, FSCV-601,															
			FSCV-PRT, FSCV-701,															
			FSCV-702, FSCV-703)															
			Bypass Pressure Control Valve	2.3.5	G													
			(BPCV-701)															

SUBMITTAL REGISTER

CONTRACT NO.

TITLE AND LOCATION
Djibouti Fuel Storage Facility

CONTRACTOR

ACTIVITY NO	TRANSMITTAL NO	SPEC SECT	DESCRIPTION ITEM SUBMITTED	PARAGRAPH #	CLASSIFICATION	GOVT OR A/E REVWR	CONTRACTOR: SCHEDULE DATES			CONTRACTOR ACTION			APPROVING AUTHORITY				MAILED TO CONTR/	REMARKS
							SUBMIT	APPROVAL NEEDED BY	MATERIAL NEEDED BY	ACTION CODE	DATE OF ACTION	DATE FWD TO APPR AUTH/ DATE RCD FROM CONTR	DATE FWD TO OTHER REVIEWER	DATE RCD FROM OTH REVIEWER	ACTION CODE	DATE OF ACTION	DATE RCD FRM APPR AUTH	
(a)	(b)	(c)	(d)	(e)	(f)		(g)	(h)	(i)	(j)	(k)	(l)	(m)	(n)	(o)	(p)	(q)	(r)
		33 52 43.14	Overfill Valve for Product	2.3.6	G													
			Recovery Tank (OV-707)															
			Truck Loading Control Valve	2.3.7	G													
			(TFCV-403, TFCV-404)															
			SD-06 Test Reports															
			High Liquid Level Shut-Off Valve	2.3.1	G													
			(LCV-501 and LCV-601)															
			Non Surge Check Valve (CV-501,	2.3.2	G													
			CV-502, CV-503, CV-504, CV-601,															
			CV-602, CV-603, CV-604, CV-707)															
			Filter/Separator Control Valve	2.3.3	G													
			(FSCV-501, FSCV-601,															
			FSCV-PRT, FSCV-701,															
			FSCV-702, FSCV-703)															
			Bypass Pressure Control Valve	2.3.5	G													
			(BPCV-701)															
			Overfill Valve for Product	2.3.6	G													
			Recovery Tank (OV-707)															
			Truck Loading Control Valve	2.3.7	G													
			(TFCV-403, TFCV-404)															
			SD-07 Certificates															
			Previous Air Force/Military	1.4.1	G													
			Projects															
			Qualified Engineers	1.4.1	G													
			Field Assistance	1.4.1	G													

SUBMITTAL REGISTER

CONTRACT NO.

TITLE AND LOCATION
Djibouti Fuel Storage Facility

CONTRACTOR

ACTIVITY NO	TRANSMITTAL NO	SPEC SECT	DESCRIPTION ITEM SUBMITTED	PARAGRAPH #	CLASSIFICATION	GOVT OR A/E REVWR	CONTRACTOR: SCHEDULE DATES			CONTRACTOR ACTION			APPROVING AUTHORITY					
							SUBMIT	APPROVAL NEEDED BY	MATERIAL NEEDED BY	ACTION CODE	DATE OF ACTION	DATE FWD TO APPR AUTH/ DATE RCD FROM CONTR	DATE FWD TO OTHER REVIEWER	DATE RCD FROM OTH REVIEWER	ACTION CODE	DATE OF ACTION	MAILED TO CONTR/ DATE RCD FRM APPR AUTH	REMARKS
(a)	(b)	(c)	(d)	(e)	(f)		(g)	(h)	(i)	(j)	(k)	(l)	(m)	(n)	(o)	(p)	(q)	(r)
		33 52 43.14	SD-10 Operation and Maintenance															
			Data															
			Operation and Maintenance	1.4.2	G													
			Manuals															
		33 52 43.23	SD-02 Shop Drawings															
			Fueling Pump (FP-501, FP-502,	2.1	G													
			FP-503, FP-601, FP-602, FP-603)															
			Fuel Transfer Pump (P-707)	2.2	G													
			Water Draw-off Pump (WSP-501,	2.2	G													
			WSP-502)															
			SD-03 Product Data															
			Fueling Pump (FP501, FP-502,	2.1	G													
			FP-503, FP-601, FP-602, FP-603)															
			Fuel Transfer Pump (P-707)	2.2	G													
			Water Draw-off Pump (WSP-501,	2.2	G													
			WSP-502)															
			SD-06 Test Reports															
			Certified Test Curves	1.2														
			SD-07 Certificates															
			Fueling Pump (FP501, FP-502,	2.1	G													
			FP-503, FP-601, FP-602, FP-603)															
			Fuel Transfer Pump (P-707)	2.2	G													
			Water Draw-off Pump (WSP-501,	2.2	G													
			WSP-502)															
			SD-10 Operation and Maintenance															
			Data															

SUBMITTAL REGISTER

CONTRACT NO.

TITLE AND LOCATION
Djibouti Fuel Storage Facility

CONTRACTOR

ACTIVITY NO	TRANSMITTAL NO	SPEC SECT	DESCRIPTION ITEM SUBMITTED	PARAGRAPH #	CLASSIFICATION	GOVT OR A/E REVWR	CONTRACTOR: SCHEDULE DATES			CONTRACTOR ACTION			APPROVING AUTHORITY					
							SUBMIT	APPROVAL NEEDED BY	MATERIAL NEEDED BY	ACTION CODE	DATE OF ACTION	DATE FWD TO APPR AUTH/ DATE RCD FROM CONTR	DATE FWD TO OTHER REVIEWER	DATE RCD FROM OTH REVIEWER	ACTION CODE	DATE OF ACTION	MAILED TO CONTR/ DATE RCD FRM APPR AUTH	REMARKS
(a)	(b)	(c)	(d)	(e)	(f)		(g)	(h)	(i)	(j)	(k)	(l)	(m)	(n)	(o)	(p)	(q)	(r)
		33 52 43.23	Operation and Maintenance	1.2	G													
			Manuals															
		33 52 43.28	SD-02 Shop Drawings															
			Filter Separator	2.3	G													
			SD-03 Product Data															
			Filter Separator	2.3	G													
			Manual Drain Valve	2.4.1	G													
			Sight Gauge	2.4.2	G													
			Differential Pressure Gauge	2.4.3	G													
			Automatic Air Eliminator	2.4.4	G													
			Safety Relief Valve	2.3.8	G													
			Safety Relief Valve	2.4.5	G													
			Sampling Connections	2.4.6	G													
			SD-07 Certificates															
			Filter Separator	2.3														
			SD-10 Operation and Maintenance															
			Data															
			Filter Separator	2.3	G													
		33 52 80	SD-03 Product Data															
			External Pipe Coating	2.1.1	G													
			Internal Pipe Coating	2.2	G													
			Field-Applied External Pipe	3.2.1	G													
			Coating															
			SD-06 Test Reports															
			Qualification Testing	2.3.1														
			Qualification Testing	2.3.1														

SUBMITTAL REGISTER

CONTRACT NO.

TITLE AND LOCATION
Djibouti Fuel Storage Facility

CONTRACTOR

ACTIVITY NO	TRANSMITTAL NO	SPEC SECT	DESCRIPTION ITEM SUBMITTED	PARAGRAPH #	CLASSIFICATION	GOVT OR A/E REVWR	CONTRACTOR: SCHEDULE DATES			CONTRACTOR ACTION			APPROVING AUTHORITY				MAILED TO CONTR/	REMARKS
							SUBMIT	APPROVAL NEEDED BY	MATERIAL NEEDED BY	ACTION CODE	DATE OF ACTION	DATE FWD TO APPR AUTH/ DATE RCD FROM CONTR	DATE FWD TO OTHER REVIEWER	DATE RCD FROM OTH REVIEWER	ACTION CODE	DATE OF ACTION	DATE RCD FRM APPR AUTH	
(a)	(b)	(c)	(d)	(e)	(f)		(g)	(h)	(i)	(j)	(k)	(l)	(m)	(n)	(o)	(p)	(q)	(r)
		33 52 80	Acceptance Testing	2.3.1														
			Inspection Report Forms	2.3.3.2														
			Inspection Report Forms	3.4.2.2														
			Daily Inspection Reports	2.3.3.3														
			Daily Inspection Reports	3.4.2.3														
			SD-07 Certificates															
			Contract Errors, Omissions, and	1.4.1	G													
			Other Discrepancies															
			Corrective Action Procedures	1.4.2.1	G													
			Coating Work Plan	1.4.3	G													
			Qualifications of Certified	1.4.4.1	G													
			Industrial Hygienist (CIH)															
			Qualifications of Pipe Coating	1.4.4.8	G													
			Shop															
			Qualifications of Certified	1.4.4.2	G													
			Protective Coatings Specialist															
			(PCS)															
			Qualifications of Coating	1.4.4.3	G													
			Inspection Company for Field															
			Coating															
			Qualifications of Coating	1.4.4.4	G													
			Inspector for Field Coating															
			Qualifications Of Individuals	1.4.4.5	G													
			Performing Abrasive Blasting for															
			Field Coating															

SUBMITTAL REGISTER

CONTRACT NO.

TITLE AND LOCATION
Djibouti Fuel Storage Facility

CONTRACTOR

ACTIVITY NO	TRANSMITTAL NO	SPEC SECT	DESCRIPTION ITEM SUBMITTED	PARAGRAPH #	CLASSIFICATION	GOVT OR A/E REVWR	CONTRACTOR: SCHEDULE DATES			CONTRACTOR ACTION			APPROVING AUTHORITY				MAILED TO CONTR/ DATE RCD FRM APPR AUTH	REMARKS
							SUBMIT	APPROVAL NEEDED BY	MATERIAL NEEDED BY	ACTION CODE	DATE OF ACTION	DATE FWD TO APPR AUTH/ DATE RCD FROM CONTR	DATE FWD TO OTHER REVIEWER	DATE RCD FROM OTH REVIEWER	ACTION CODE	DATE OF ACTION		
(a)	(b)	(c)	(d)	(e)	(f)		(g)	(h)	(i)	(j)	(k)	(l)	(m)	(n)	(o)	(p)	(q)	(r)
		33 52 80	Qualifications of Individuals	1.4.4.6	G													
			Performing Coating Application for															
			Field Coating															
			Qualifications of Individuals	1.4.4.6	G													
			Performing Coating Application for															
			Field Coating															
			Qualifications of Individuals	1.4.4.7	G													
			Operating Plural Component															
			Equipment (Pump Tenders) for															
			Field Coating															
			Qualifications of Coating	1.4.4.9	G													
			Contractors															
			SD-11 Closeout Submittals															
			Inspection Logbook	3.4.2.4														
		33 52 90.00 20	SD-01 Preconstruction Submittals															
			Welding procedure qualification	1.6	G													
			Welding Operations	3.1	G													
			SD-02 Shop Drawings															
			POL Service Piping	1.6.2	G													
			SD-06 Test Reports															
			Examinations, Inspections and	3.2														
			Tests															
			SD-07 Certificates															
			Qualifications	1.6	G													
		33 56 10	SD-02 Shop Drawings															
			Grounding and Bonding	2.3.2														

SUBMITTAL REGISTER

CONTRACT NO.

TITLE AND LOCATION
Djibouti Fuel Storage Facility

CONTRACTOR

ACTIVITY NO	TRANSMITTAL NO	SPEC SECT	DESCRIPTION ITEM SUBMITTED	PARAGRAPH #	CLASSIFICATION	GOVT OR A/E REVWR	CONTRACTOR: SCHEDULE DATES			CONTRACTOR ACTION			APPROVING AUTHORITY				MAILED TO CONTR/	REMARKS
							SUBMIT	APPROVAL NEEDED BY	MATERIAL NEEDED BY	ACTION CODE	DATE OF ACTION	DATE FWD TO APPR AUTH/ DATE RCD FROM CONTR	DATE FWD TO OTHER REVIEWER	DATE RCD FROM OTH REVIEWER	ACTION CODE	DATE OF ACTION	DATE RCD FRM APPR AUTH	
(a)	(b)	(c)	(d)	(e)	(f)		(g)	(h)	(i)	(j)	(k)	(l)	(m)	(n)	(o)	(p)	(q)	(r)
		33 56 10	SD-03 Product Data															
			Aboveground Storage Tank	2.4	G													
			(PRT-2)															
			Tank Protective Coatings	2.5	G													
			Automatic Level Alarm System	2.7	G													
			Tank Gauges	2.8	G													
			Leak Detection Monitor	2.9	G													
			SD-06 Test Reports															
			Aboveground Storage Tank	3.2.1	G													
			Tightness Tests															
			Tank Manufacturer's Tests	3.2.2														
			Tank Fill Tests	3.4														
			SD-07 Certificates															
			Contractor Qualifications	1.4.1	G													
			Permitting	1.4.2.1														
			Registration	1.4.2.2														
			Licensed Personnel	1.4.2.3														
			Demonstrations	3.3														
			SD-08 Manufacturer’s Instructions															
			Aboveground Storage Tank	2.4														
			(PRT-2)															
			Automatic Level Alarm System	2.7														
			Tank Gauges	2.8														
			SD-10 Operation and Maintenance															
			Data															

SUBMITTAL REGISTER

CONTRACT NO.

TITLE AND LOCATION
Djibouti Fuel Storage Facility

CONTRACTOR

ACTIVITY NO	TRANSMITTAL NO	SPEC SECT	DESCRIPTION ITEM SUBMITTED	PARAGRAPH #	CLASSIFICATION	GOVT OR A/E REVWR	CONTRACTOR: SCHEDULE DATES			CONTRACTOR ACTION			APPROVING AUTHORITY					
							SUBMIT	APPROVAL NEEDED BY	MATERIAL NEEDED BY	ACTION CODE	DATE OF ACTION	DATE FWD TO APPR AUTH/ DATE RCD FROM CONTR	DATE FWD TO OTHER REVIEWER	DATE RCD FROM OTH REVIEWER	ACTION CODE	DATE OF ACTION	MAILED TO CONTR/ DATE RCD FRM APPR AUTH	REMARKS
(a)	(b)	(c)	(d)	(e)	(f)		(g)	(h)	(i)	(j)	(k)	(l)	(m)	(n)	(o)	(p)	(q)	(r)
		33 56 10	Aboveground Storage Tank	2.4														
			(PRT-2)															
			Automatic Level Alarm System	2.7														
			Tank Gauges	2.8														
		33 56 13.13	SD-01 Preconstruction Submittals															
			Copies of API Publications	1.3	G													
			NACE Visual Comparator	3.3.6	G													
			Acknowledgement of surface	3.3.6	G													
			finish requirements															
			Acknowledgement of API STD	1.4	G													
			650															
			SD-02 Shop Drawings															
			Steel tank	1.8.2	G													
			SD-03 Product Data															
			Carbon steel, pipe fittings,	2.3	G													
			flanges, gaskets, and bolting															
			Structural steel	2.2	G													
			Sample Gauge hatch	2.12.8	G													
			Leak Detection Piping	2.12.5	G													
			Safety Device Against Detonation	2.12.6	G													
			(SDD, Flame Arrestor)															
			Leak Detection Float Switch	2.12.7	G													
			Internal Ladders	2.12.11	G													
			Mechanical tape level gauge	2.12.9	G													
			Gaskets for Manhole Covers and	2.9	G													
			Stilling Well Flanges															

SUBMITTAL REGISTER

CONTRACT NO.

TITLE AND LOCATION
Djibouti Fuel Storage Facility

CONTRACTOR

ACTIVITY NO	TRANSMITTAL NO	SPEC SECT	DESCRIPTION ITEM SUBMITTED	PARAGRAPH #	CLASSIFICATION	GOVT OR A/E REVWR	CONTRACTOR: SCHEDULE DATES			CONTRACTOR ACTION			APPROVING AUTHORITY				MAILED TO CONTR/ DATE RCD FRM APPR AUTH	REMARKS
							SUBMIT	APPROVAL NEEDED BY	MATERIAL NEEDED BY	ACTION CODE	DATE OF ACTION	DATE FWD TO APPR AUTH/ DATE RCD FROM CONTR	DATE FWD TO OTHER REVIEWER	DATE RCD FROM OTH REVIEWER	ACTION CODE	DATE OF ACTION		
(a)	(b)	(c)	(d)	(e)	(f)		(g)	(h)	(i)	(j)	(k)	(l)	(m)	(n)	(o)	(p)	(q)	(r)
		33 56 13.13	Aluminum piping	2.5	G													
			Aluminum flanges	2.6	G													
			Antiseize compound	2.12.12	G													
			SD-05 Design Data															
			Tank design	1.8.3	G													
			SD-06 Test Reports															
			Visual examination of vertical	3.5.2														
			shell-seam tack welds															
			Visual examination of initial pass	3.5.2														
			of internal shell-to-bottom weld															
			Vacuum box testing of internal	3.5.2														
			shell-to-bottom initial weld pass															
			Visual examination of completed	3.5.2														
			internal and external															
			shell-to-bottom welds															
			Ultrasonic examination of shell	3.5.2														
			butt weld															
			Visual examination of shell butt	3.5.2														
			welds															
			Visual examination of fillet welds	3.5.2														
			Visual examination of tank bottom	3.5.2														
			plates															
			Vacuum box testing of tank	3.5.2														
			bottom fillet weld															
			Pneumatic tests of reinforcing	3.5.2														
			plates															

SUBMITTAL REGISTER

CONTRACT NO.

TITLE AND LOCATION
Djibouti Fuel Storage Facility

CONTRACTOR

ACTIVITY NO	TRANSMITTAL NO	SPEC SECT	DESCRIPTION ITEM SUBMITTED	PARAGRAPH #	CLASSIFICATION	GOVT OR A/E REVWR	CONTRACTOR: SCHEDULE DATES			CONTRACTOR ACTION			APPROVING AUTHORITY					
							SUBMIT	APPROVAL NEEDED BY	MATERIAL NEEDED BY	ACTION CODE	DATE OF ACTION	DATE FWD TO APPR AUTH/ DATE RCD FROM CONTR	DATE FWD TO OTHER REVIEWER	DATE RCD FROM OTH REVIEWER	ACTION CODE	DATE OF ACTION	MAILED TO CONTR/ DATE RCD FRM APPR AUTH	REMARKS
(a)	(b)	(c)	(d)	(e)	(f)		(g)	(h)	(i)	(j)	(k)	(l)	(m)	(n)	(o)	(p)	(q)	(r)
		33 56 13.13	Hydrostatic testing	3.5.5														
			Shell settlement measurements	3.5.5														
			taken before, during, and after															
			hydrostatic testing															
			Internal bottom elevation readings	3.5.5														
			taken before and after hydrostatic															
			testing															
			Shell Plumbness	3.5.5														
			Shell Roundness	3.5.5														
			Maximum local deviations, shell	3.5.5														
			Tightness test records	3.5.6														
			Tank bottom puddle test	3.5.8														
			SD-07 Certificates															
			Welding Procedure Specifications	1.6.1	G													
			(WPS)															
			Welding Procedure Qualification	1.6.1	G													
			Records (PQRs)															
			Welder Performance Qualification	1.6.1	G													
			Records (WPQ)															
			Qualifications of tank erector	1.6	G													
			Qualifications of API Std 653	1.8.7	G													
			Inspector															
			Weld Inspector Certification	1.8.4	G													
			NDE Personnel Certification	1.8.6.1	G													
			Qualifications of Testing Agency	1.8.6.2	G													
			Tank calibration experience	1.7	G													

SUBMITTAL REGISTER

CONTRACT NO.

TITLE AND LOCATION
Djibouti Fuel Storage Facility

CONTRACTOR

ACTIVITY NO	TRANSMITTAL NO	SPEC SECT	DESCRIPTION ITEM SUBMITTED	PARAGRAPH #	CLASSIFICATION	GOVT OR A/E REVWR	CONTRACTOR: SCHEDULE DATES			CONTRACTOR ACTION			APPROVING AUTHORITY					
							SUBMIT	APPROVAL NEEDED BY	MATERIAL NEEDED BY	ACTION CODE	DATE OF ACTION	DATE FWD TO APPR AUTH/ DATE RCD FROM CONTR	DATE FWD TO OTHER REVIEWER	DATE RCD FROM OTH REVIEWER	ACTION CODE	DATE OF ACTION	MAILED TO CONTR/ DATE RCD FRM APPR AUTH	REMARKS
(a)	(b)	(c)	(d)	(e)	(f)		(g)	(h)	(i)	(j)	(k)	(l)	(m)	(n)	(o)	(p)	(q)	(r)
		33 56 13.13	SD-09 Manufacturer's Field															
			Reports															
			Mill test reports	2.2	G													
			Impact Test Data	2.2	G													
			SD-10 Operation and Maintenance															
			Data															
			Tank calibration table	3.5.1	G													
			Electronic Calibration Table	3.5.1	G													
			API Std 653 inspection reports	3.2	G													
			Maintenance instructions,	3.5.11	G													
			Operator instructions	3.5.12	G													
		33 57 00	SD-02 Shop Drawings															
			Grounding and Bonding	2.2.3														
			SD-03 Product Data															
			Fuel Quantity Indicator (Fuel	2.4	G													
			Meter)															
			Aviation Fueling Hose	2.5	G													
			Aircraft Pressure Fueling Nozzle	2.6.1	G													
			Differential Pressure Gauge	2.7	G													
			Control Stations	2.8	G													
			Dry-Break Coupler	2.6.2	G													
			Quick Disconnect Coupler	2.6.3	G													
			Deadman Control	2.8.2	G													
			Tank Truck Grounding Unit	2.8.3	G													
			Tank Truck Overfill Protection	2.8.4	G													
			System															

SUBMITTAL REGISTER

CONTRACT NO.

TITLE AND LOCATION
Djibouti Fuel Storage Facility

CONTRACTOR

ACTIVITY NO	TRANSMITTAL NO	SPEC SECT	DESCRIPTION ITEM SUBMITTED	PARAGRAPH #	CLASSIFICATION	GOVT OR A/E REVWR	CONTRACTOR: SCHEDULE DATES			CONTRACTOR ACTION			APPROVING AUTHORITY					
							SUBMIT	APPROVAL NEEDED BY	MATERIAL NEEDED BY	ACTION CODE	DATE OF ACTION	DATE FWD TO APPR AUTH/ DATE RCD FROM CONTR	DATE FWD TO OTHER REVIEWER	DATE RCD FROM OTH REVIEWER	ACTION CODE	DATE OF ACTION	MAILED TO CONTR/ DATE RCD FRM APPR AUTH	REMARKS
(a)	(b)	(c)	(d)	(e)	(f)		(g)	(h)	(i)	(j)	(k)	(l)	(m)	(n)	(o)	(p)	(q)	(r)
		33 57 00	SD-07 Certificates															
			Demonstrations	3.3														
			SD-10 Operation and Maintenance															
			Data															
			Fuel Quantity Indicator (Fuel	2.4	G													
			Meter)															
			Aviation Fueling Hose	2.5														
			Aircraft Pressure Fueling Nozzle	2.6.1														
			Differential Pressure Gauge	2.7														
			Dry-Break Coupler	2.6.2	G													
			Quick Disconnect Coupler	2.6.3	G													
			Deadman Control	2.8.2	G													
			Tank Truck Grounding Unit	2.8.3	G													
			Tank Truck Overfill Protection	2.8.4	G													
			System															
			Control Stations	2.8														
		33 65 00	SD-03 Product Data															
			Cleaning agents	2.1.1	G													
			Gasoline-oil-resisting rubber	2.2														
			gloves and boots															
			Cotton coveralls and hard hat	2.2														
			Respiratory protective equipment	2.2														
			Disinfectant	2.2														
			SD-06 Test Reports															
			Tank contents	1.4.9.1														
			Monitoring Results	1.4.9.2	G													

SUBMITTAL REGISTER

CONTRACT NO.

TITLE AND LOCATION
Djibouti Fuel Storage Facility

CONTRACTOR

ACTIVITY NO	TRANSMITTAL NO	SPEC SECT	DESCRIPTION ITEM SUBMITTED	PARAGRAPH #	CLASSIFICATION	GOVT OR A/E REVWR	CONTRACTOR: SCHEDULE DATES			CONTRACTOR ACTION			APPROVING AUTHORITY					
							SUBMIT	APPROVAL NEEDED BY	MATERIAL NEEDED BY	ACTION CODE	DATE OF ACTION	DATE FWD TO APPR AUTH/ DATE RCD FROM CONTR	DATE FWD TO OTHER REVIEWER	DATE RCD FROM OTH REVIEWER	ACTION CODE	DATE OF ACTION	MAILED TO CONTR/ DATE RCD FRM APPR AUTH	REMARKS
(a)	(b)	(c)	(d)	(e)	(f)		(g)	(h)	(i)	(j)	(k)	(l)	(m)	(n)	(o)	(p)	(q)	(r)
		33 65 00	SD-07 Certificates															
			Qualifications of Marine Chemist	1.4.8.1														
			Qualifications of Certified	1.4.8.2														
			Industrial Hygienist (CIH)															
			Testing laboratory	1.4.8.3														
			Safety plan	1.4.8.4														
			Work plan	1.4.8.5														
			Tank certification of safety	1.4.8.6														
			Training certification	1.4.8.4														
			Respiratory protective equipment	2.2														
			Breathing-air supply source	2.2														
			Combustible gas indicator	2.2														
			Oxygen meter	2.2														
			Velometers	2.2														
			Lighting	2.2														
			First aid kit	2.2														
			exhaust	1.6.1														
			SD-08 Manufacturer's Instructions															
			cleaning agents	2.1.1														
			SD-11 Closeout Submittals															
			Safety permits	1.4.3														
		33 71 02	SD-02 Shop Drawings															
			Precast underground structures	1.6.1	G													
			SD-03 Product Data															
			Medium voltage cable	2.5	G													
			Medium voltage cable joints	2.7	G													

SUBMITTAL REGISTER

CONTRACT NO.

TITLE AND LOCATION
Djibouti Fuel Storage Facility

CONTRACTOR

ACTIVITY NO	TRANSMITTAL NO	SPEC SECT	DESCRIPTION ITEM SUBMITTED	PARAGRAPH #	CLASSIFICATION	GOVT OR A/E REVWR	CONTRACTOR: SCHEDULE DATES			CONTRACTOR ACTION			APPROVING AUTHORITY					
							SUBMIT	APPROVAL NEEDED BY	MATERIAL NEEDED BY	ACTION CODE	DATE OF ACTION	DATE FWD TO APPR AUTH/ DATE RCD FROM CONTR	DATE FWD TO OTHER REVIEWER	DATE RCD FROM OTH REVIEWER	ACTION CODE	DATE OF ACTION	MAILED TO CONTR/ DATE RCD FRM APPR AUTH	REMARKS
(a)	(b)	(c)	(d)	(e)	(f)		(g)	(h)	(i)	(j)	(k)	(l)	(m)	(n)	(o)	(p)	(q)	(r)
		33 71 02	Medium voltage cable	2.6	G													
			terminations															
			Precast concrete structures	2.12.2.1	G													
			Sealing Material	2.12.2.4														
			Pulling-In Irons	3.5.3														
			Manhole frames and covers	2.12.3	G													
			Handhole frames and covers	2.12.4	G													
			Composite/fiberglass handholes	2.12.6	G													
			Cable supports	2.13	G													
			SD-06 Test Reports															
			Medium voltage cable	2.15.2	G													
			qualification and production tests															
			Field Acceptance Checks and	3.18.1	G													
			Tests															
			Arc-proofing test	2.15.1	G													
			Cable Installation Plan and	3.3	G													
			Procedure															
			SD-07 Certificates															
			Cable splicer/terminator	1.6.2	G													
			Cable Installer Qualifications	1.6.3	G													
		46 25 14	SD-02 Shop Drawings															
			Separator	1.2.2	G													
			Accessory equipment	2.6	G													
			SD-05 Design Data															
			Separator	1.2.2	G													
			Accessory equipment	2.6	G													

SUBMITTAL REGISTER

CONTRACT NO.

TITLE AND LOCATION
Djibouti Fuel Storage Facility

CONTRACTOR

ACTIVITY NO	TRANSMITTAL NO	SPEC SECT	DESCRIPTION ITEM SUBMITTED	PARAGRAPH #	CLASSIFICATION	GOVT OR A/E REVWR	CONTRACTOR: SCHEDULE DATES			CONTRACTOR ACTION			APPROVING AUTHORITY					
							SUBMIT	APPROVAL NEEDED BY	MATERIAL NEEDED BY	ACTION CODE	DATE OF ACTION	DATE FWD TO APPR AUTH/ DATE RCD FROM CONTR	DATE FWD TO OTHER REVIEWER	DATE RCD FROM OTH REVIEWER	ACTION CODE	DATE OF ACTION	MAILED TO CONTR/ DATE RCD FRM APPR AUTH	REMARKS
(a)	(b)	(c)	(d)	(e)	(f)		(g)	(h)	(i)	(j)	(k)	(l)	(m)	(n)	(o)	(p)	(q)	(r)
		46 25 14	SD-06 Test Reports															
			Shop hydrostatic test	2.7.1	G													
			Inspection	3.1														
			Field hydrostatic test	3.3.1														
			Preoperational test	3.3.2														
			In-service test	3.3.3														
			SD-07 Certificates															
			Separator corrosion protection	2.1.1	G													
			SD-08 Manufacturer’s Instructions															
			Separator system	3.2	G													
			SD-10 Operation and Maintenance															
			Data															
			Separator system	3.2	G													
		48 14 13.00 20	SD-03 Product Data															
			Piping	2.2	G													
			Valves	2.3	G													
			Piping Specialties	2.4	G													
			Solar Water Heater	1.4.1	G													
			Solar Water Heater	2.1	G													
			SD-08 Manufacturer’s Instructions															
			Solar Water Heater	1.4.1	G													
			Solar Water Heater	2.1	G													
			SD-10 Operation and Maintenance															
			Data															
			Solar Water Heater	1.4.1	G													
			Solar Water Heater	2.1	G													

SUBMITTAL REGISTER

CONTRACT NO.

TITLE AND LOCATION
Djibouti Fuel Storage Facility

CONTRACTOR

ACTIVITY NO	TRANSMITTAL NO	SPEC SECT	DESCRIPTION ITEM SUBMITTED	PARAGRAPH #	CLASSIFICATION	GOVT OR A/E REVWR	CONTRACTOR: SCHEDULE DATES			CONTRACTOR ACTION			APPROVING AUTHORITY					
							SUBMIT	APPROVAL NEEDED BY	MATERIAL NEEDED BY	ACTION CODE	DATE OF ACTION	DATE FWD TO APPR AUTH/ DATE RCD FROM CONTR	DATE FWD TO OTHER REVIEWER	DATE RCD FROM OTH REVIEWER	ACTION CODE	DATE OF ACTION	MAILED TO CONTR/ DATE RCD FRM APPR AUTH	REMARKS
(a)	(b)	(c)	(d)	(e)	(f)		(g)	(h)	(i)	(j)	(k)	(l)	(m)	(n)	(o)	(p)	(q)	(r)
		48 14 13.00 20	SD-11 Closeout Submittals															
			Posted Operating Instructions	1.6	G													

SECTION 01 33 23.33

AVIATION FUEL SYSTEM SPECIFIC SUBMITTAL REQUIREMENTS
02/10

PART 1 GENERAL

1.1 SUBMITTALS

Provide submittals as specified in each individual section and obtain approval as specified before procurement, fabrication, or delivery to the job site. Partial submittals are not acceptable and will be returned without review. In addition to the definitions in Section 01 33 00 SUBMITTAL PROCEDURES, the following provisions apply:

1.1.1 SD-02 Shop Drawings

Drawings shall be a minimum of A3 sheet in size, with a minimum scale of 1:100, except as specified otherwise. Include floor plans, sectional views, wiring diagrams, and installation details of equipment; and equipment spaces identifying and indicating proposed location, layout and arrangement of items of equipment, control panels, accessories, piping, ductwork, and other items that must be shown to assure a coordinated installation. Wiring diagrams shall identify circuit terminals, and indicate the internal wiring for each item of equipment and the interconnection between each item of equipment. Drawings shall indicate adequate clearance for operation, maintenance, and replacement of operating equipment devices. If equipment is disapproved, drawings shall be revised to show acceptable equipment and be resubmitted. (Prior to the completion of the contract, on A1 sheet size reproducible drawings, for each system, wiring/control diagram and approved system layout drawing shall be provided to the Contracting Officer with the operation and maintenance manuals specified herein).

1.1.2 SD-03 Product Data

Submittals for each manufactured item shall be manufacturer's descriptive literature of cataloged products, equipment drawings, diagrams, performance and characteristic curves, and catalog cuts. The submittals shall also include the manufacturer's name, trade name, catalog model or number, nameplate data, size, layout dimensions, capacity, project specification and paragraph reference, applicable Government, industry, and technical society publication references, years of satisfactory service, and other information necessary to establish contract compliance of each item the Contractor proposes to provide. Photographs of existing installations and data submitted in lieu of catalog data are not acceptable and will be returned without approval.

1.1.2.1 Standards Compliance

When materials or equipment are required to conform to the standards of organizations such as the American National Standards Institute (ANSI), ASTM International (ASTM) , National Electrical Manufacturers Association (NEMA), ASME International (ASME), American Gas Association (AGA), American Petroleum Institute (API), Air-Conditioning and Refrigeration Institute (ARI), and Underwriters Laboratories (UL) or equivalent, submit proof of such conformance to the Contracting Officer. Factory Mutual (FM)

listing or CSA International (CSA) listing will be acceptable in lieu of any UL listing requirements. If an organization uses a label or listing to indicate compliance with a particular standard, the label or listing will be acceptable evidence, unless otherwise specified in the individual sections. In lieu of the label or listing, submit a certificate from an independent testing organization, which is competent to perform acceptable test and is approved by the Contracting Officer. The certificate shall state that the item has been tested in accordance with the specified organization's test methods and that the item conforms to the specified organization's standard. For materials and equipment whose compliance with organizational - standards or specifications is not regulated by an organization using its own listing or label as proof of compliance, submit a certificate of compliance from the manufacturer. The certificate shall identify the manufacturer, the product, and the referenced standard and shall simply state that the manufacturer certifies that the product conforms to all requirements of the project specification and of the referenced standards listed.

1.1.2.2 Manufacturer's Installation Instructions

Where installation procedures or any part thereof are required to be in accordance with the recommendations of the manufacturer of the material being installed, furnish printed copies of these recommendations prior to installation. Installation of the item will not be allowed to proceed until the recommendations are received. Failure to furnish these recommendations can be cause for rejection of the material.

PART 2 PRODUCTS

2.1 STANDARD PRODUCTS/SERVICE AVAILABILITY

2.1.1 Materials and Equipment

Provide materials and equipment that are standard products of a manufacturer regularly engaged in the manufacturer of such products, which are of a similar material, design and workmanship. The standard products shall have been in satisfactory commercial or industrial use for two years prior to bid opening. The two-year use shall include applications of equipment and materials under similar circumstances and of similar size. Contracting Officer approval of materials with less than two years experience is allowed if acceptable by the design agency, and MAJCOM Fuels Engineer.

2.1.1.1 Experience Required

The two-year experience requirement must be satisfactorily completed for a product which has been sold or is offered for sale on the commercial market through advertisements, manufacturer's catalogs, or brochures.

2.1.1.2 Alternative Service Record

Products having less than a two-year field service record will be acceptable if a certified record of satisfactory field operation for not less than 6000 hours, exclusive of the manufacturer's factory or laboratory test, can be shown. Contracting Officer approval of materials with less than two years experience is allowed if acceptable by the design agency, and MAJCOM Fuels Engineer.

2.1.2 Service Support

The equipment items shall be supported by service organizations. Submit a certified list of qualified permanent service organizations for support of the equipment which includes their addresses and qualifications. These service organizations shall be reasonably convenient to the equipment installation and able to render satisfactory service to the equipment on a regular and emergency basis during the warranty period of the contract.

2.1.3 Manufacturer's Nameplate

Provide a nameplate, on each item of equipment, bearing the manufacturer's name, address, model number, and serial number securely permanently affixed in a conspicuous place; the nameplate of the distributing agent will not be acceptable.

PART 3 EXECUTION

Not Used

-- End of Section --

THIS PAGE HAS BEEN INTENTIONALLY LEFT BLANK

SECTION 01 33 29

SUSTAINABILITY REPORTING
02/15

PART 1 GENERAL

1.1 REFERENCES

The publications listed below form a part of this specification to the extent referenced. The publications are referred to within the text by the basic designation only.

AMERICAN SOCIETY OF HEATING, REFRIGERATING AND AIR-CONDITIONING ENGINEERS (ASHRAE)

ASHRAE 189.1	(2011; Errata 1-2 2012; INT 1 2013; Errata 3-8 2013) Standard for the Design of High-Performance Green Buildings Except Low-Rise Residential Buildings

SHEET METAL AND AIR CONDITIONING CONTRACTORS' NATIONAL ASSOCIATION (SMACNA)

ANSI/SMACNA 008	(2007) IAQ Guidelines for Occupied Buildings Under Construction, 2nd Edition

U.S. DEPARTMENT OF ENERGY (DOE)

ISWG Guiding Principles	(2008) High Performance and Sustainable Buildings Guidance

U.S. NATIONAL ARCHIVES AND RECORDS ADMINISTRATION (NARA)

40 CFR 247	Comprehensive Procurement Guideline for Products Containing Recovered Materials

1.2 SUMMARY

This specification includes general requirements and procedures for this project to be constructed and documented per the federally mandated "Guiding Principles" (GP), Third Party Certification (TPC) requirements (if applicable), UFC 1-200-02, High Performance and Sustainable Building Requirements, and other requirements identified in this specification.

1.3 SUBMITTALS

Government approval is required for submittals with a "G" designation; submittals not having a "G" designation are for Contractor QC approval. Submittals with an "S" are for inclusion in the Sustainability Notebook, in conformance to this section. Submit the following in accordance with Section 01 33 00 SUBMITTAL PROCEDURES:

SD-01 Preconstruction Submittals

Preliminary Sustainability Notebook; G

Preliminary High Performance and Sustainable Building Checklist

SD-11 Closeout Submittals

Final Sustainability Notebook; G

Final High Performance and Sustainable Building Checklist; G

1.4 GUIDING PRINCIPLES VALIDATION (GPV)

Provide construction related sustainability documentation to verify achievement of ISWG Guiding Principles Validation (GPV). Provide the following for GPV:

a. Refer to Attachment 1, HPSB Checklist at the end of this specification section.

b. Obtain approval of any changes to the HPSB Checklist from the Contracting Officer at the Preconstruction Conference. Contracting Officer's approval establishes identified ISWG Guiding Principles Requirements as the project's sustainability goals.

   No variations or substitutions to the HPSB Checklist are allowed without written consent from the Contracting Officer. Immediately bring to the attention of the Contracting Officer any changes that impact meeting the approved ISWG Guiding Principles Requirements for this project and demonstrate that change will not incur additional construction cost or increase the life cycle cost.

c. Include all work required to incorporate the applicable ISWG Guiding Principles Requirements indicated on the HPSB Checklist and in this contract.

d. Include construction related documentation to maintain an up-to-date Sustainability Notebook. Supplement construction related documentation containing the following components;

   (1) HPSB Checklist

   (2) Sustainability Action Plan

   (3) Documentation illustrating Guiding Principle (GP) Requirements compliance

   (4) Commissioning Plan and Reports

1.4.1 Sustainability Action Plan

Include the following information in the Sustainability Action Plan:

a. Contractor's planned method to achieve each construction related GP requirement.

b. For each designated construction related ISWG Guiding Principles Requirements that is not achieved, provide narrative explaining how mission or activity precludes achieving specific sustainability requirement or goal. Provide analysis of particular requirement and level to which project is able to

comply.

c. Name and contact information for: Contractor's POC responsible for ensuring sustainability goals are accomplished and documentation is assembled.

1.4.2 Costs

Contractor is responsible for all costs associated with constructing and demonstrating that project complies with approved ISWG Guiding Principles Requirements.

1.4.3 Calculations

Provide calculations, product data, and certifications required in this section to demonstrate compliance with the ISWG Guiding Principles Requirements.

1.5 SUSTAINABILITY SUBMITTALS

Provide documentation in the Sustainability Notebook and the HPSB Checklist to indicate compliance with the sustainability requirements of the project.

1.5.1 "S" Submittals for Sustainability Documentation

Submit the GPV sustainability documentation required in this specification as "S" submittals. Highlight GPV compliance data in "S" submittal.

1.5.2 SUSTAINABILITY NOTEBOOK

Provide and maintain a comprehensive Sustainability Notebook to document compliance with the sustainability requirements identified in the approved HPSB Checklist. Sustainability Notebook must contain all required data to support full compliance with the ISWG Guiding Principles Requirements. Sustainability Notebook is in the form of an Adobe PDF file; bookmarked at each ISWG Guiding Principles Requirement and sub-bookmarked at each document. Match format to ISWG Guiding Principles numbering system indicated herein. Maintain up to date information, spreadsheets, templates, and other required documentation with each current submittal.

Contracting Officer may deduct from the monthly progress payment accordingly if Sustainability Notebook information is not current, until information is updated and on track per project goals.

1.5.2.1 Sustainability Notebook Submittal Schedule

Provide Sustainability Notebook Submittals at the following milestones of the project:

a. Preliminary Sustainability Notebook

Submit preliminary Sustainability Notebook for approval at the Pre-construction conference. Include Preliminary High Performance and Sustainable Building Checklist.

b. Construction Progress Meetings. Update GP documentation in the Sustainability Notebook for each meeting.

c. Final Sustainability Notebook

Submit updated Sustainability Notebook within 60 days after the Beneficial Occupancy Date (BOD). Final progress payment retainage may be held by Contracting Officer until final sustainability documentation is complete. Submit three (3) electronic copies of the Final Sustainability Notebook on DVDs to the Government. Include Final High Performance and Sustainable Building Checklist.

1.5.3 HIGH PERFORMANCE SUSTAINABLE BUILDING (HPSB) CHECKLIST

Provide construction documentation that provides proof of and supports compliance with the completed HBSP Checklist.

1.5.3.1 HPSB Checklist Submittals

Submit an updated copy of the HPSB Checklist with each Sustainability Notebook submittal. Attach HPSB Checklist to DD1354 Real Property Record Submittal.

1.5.3.2 HPSB Checklist Public Access

Where not included as attachment to this specification section, use the following as HPSB Checklist for respective service branch. Where Internet address appears on two lines, copy full address into Internet browser.

a. Navy - NAVFAC Sustainability & Energy Data Record Card/High Performance and Sustainable Building Checklist http://www.wbdg.org/pdfs/navfac_sustainable_energy_data_record_card.pdf

1.6 DOCUMENTATION REQUIREMENTS

Incorporate each of the following ISWG Guiding Principles Requirements into project construction; and provide documentation that proves compliance with each listed requirement. Items below are organized according to the ISWG Guiding Principles. For projects that require TPC, refer to Third Party Certifier's reference manuals for TPC requirements.

1.6.1 Commissioning

Work with the Commissioning Authority (CxA) to achieve requirements of the Commissioning plan and other contract document requirements at each stage of commissioning. Maintain up-to-date records of commissioning activities in the Sustainability Notebook, to include commissioning plan and summary commissioning report.

1.6.2 Energy Efficient Equipment

Provide only energy-using equipment that is Energy Star rated, or has the Federal Energy Management Program (FEMP) recommended efficiency. Where Energy Star or FEMP recommendations have not been established, provide equipment with efficiency in the top 25 percent for the type of equipment procured. Provide only energy using equipment that meets FEMP requirements for low standby power consumption. Energy efficient equipment can be found at: http://www1.eere.energy.gov/femp/ and http://www.energystar.gov/. Provide the following documentation:

Proof that equipment is energy efficient and complies with the cited requirements.

1.6.3 Benchmarking

Provide report of initial actual energy performance with the energy design targets. Provide the following documentation:

Prefinal Performance Report with data collected from the first 60 days of operation of the facility after Beneficial Occupancy Date (BOD). Submit this information with the Final Sustainability Notebook Submittal.

1.6.4 Reduce Volatile Organic Compounds (VOC)

Provide materials and products with low pollutant emissions, including composite wood products, adhesives, sealants, interior paints and finishes, carpet systems, and furnishings. Meeting the requirements of ASHRAE 189.1 Sections 8.4.2 (Prescriptive Option: Materials) or Section 8.5.2 (Performance Option: Materials) demonstrates compliance. Provide the following documentation:

a. Demonstrate that materials do not exceed maximum VOC emissions of cited standards. VOC averaging is allowed where coatings are subject to human contact or harsh environmental conditions.

b. Demonstrate that flooring materials comply with VOC emissions of cited standards.

c. Demonstrate that composite wood and agrifiber products and associated laminating adhesives contain no added urea-formaldehyde.

d. Demonstrate that furniture and seating complies with low emissions requirements.

e. Create and maintain a list of above listed products used on the project within the building vapor barrier. Demonstrate how product meets cited standards.

1.6.5 Indoor Air Quality During Construction

Prior to construction, create indoor air quality plan. Implement IAQ plan during construction and flush building air before occupancy.

a. Construction submittal documentation required:

(1) For new construction and for renovation of unoccupied existing buildings, comply with ASHRAE 189.1 Section 10.3.1.4. (Indoor Air Quality (IAQ) Construction Management), with maximum outdoor air consistent with achieving relative humidity no greater than 60 percent. For renovation of occupied existing buildings, comply with ANSI/SMACNA 008 IAQ Guidelines for Occupied Buildings Under Construction.

(2) Provide required documentation showing that after construction ends and prior to occupancy, new HVAC filters were installed, and building air was flushed out in accordance with UFC 1-200-02.

1.6.6 Recycled Content

Provide materials on this project with aggregated total recycled content greater than 10 percent. In addition, comply with 40 CFR 247. Refer to http://www.epa.gov/cpg/products.htm for assistance identifying products

cited in 40 CFR 247. Provide the following documentation:

a. Total amount of recycled content contained in building materials as a percentage of total cost of all building materials on the project (mechanical, electrical, and plumbing components, fire protection equipment and transportation are excluded).

b. Substitutions: Contractor may submit for Government approval, proposed alternative products or systems that provide equivalent performance and appearance and have greater contribution to project recycled content requirements. For all such proposed substitutions, submit with the Sustainability Action Plan accompanied by product data demonstrating equivalence.

1.6.7 Bio-Based Products

Utilize products and material made from biobased materials to the maximum extent possible without jeopardizing the intended end use or detracting from the overall quality delivered to the end user. Use only supplies and materials of a type and quality that conform to applicable specifications and standards.

Biobased products that are designated for preferred procurement under the USDA BioPreferred Program must meet the required minimum biobased content. Refer to http://www.biopreferred.gov for the product categories and BioPreferred Catalog. Provide the following documentation:

a. For biobased products used on this project, provide biobased content and biobased source of material. Indicate name of the manufacturer, cost of each product and the use of each product on this project.

1.6.8 Landfill Disposal

Divert construction debris from landfill disposal in accordance with Section 01 74 19 CONSTRUCTION AND DEMOLITION WASTE MANAGEMENT. Provide the following documentation:

a. Documentation showing total amount of construction debris diverted from landfill as a percentage of all construction debris on the project.

b. Include project's Construction Waste Management Plan and all dumpster haul tickets.

1.6.9 Ozone Depleting Substances

Eliminate the use of ozone depleting substances during and after construction where alternative environmentally preferable products are available. Meet the requirements of ASHRAE 189.1 Section 9.3.3 Refrigerants for no CFC-based refrigerants in heating ventilation, air conditioning and refrigeration systems (except for fire suppression system requirements, covered elsewhere in this specification). Provide the following documentation:

a. MSDS sheets for all refrigerants provided

b. Products that meet the criteria of U.S. EPA Significant New Alternatives Policy, available at http://www.epa.gov/ozone/snap/index.html.

1.6.10 Validation and Certification Restrictions

The Contractor's purchase of renewable energy certificates (RECs) specifically to meet project sustainability goals is prohibited.

PART 2 PRODUCTS

Not used.

PART 3 EXECUTION

3.1 SUSTAINABILITY COORDINATION

3.1.1 Coordinating Sustainability Documentation Progress

Provide sustainability focus and coordination at the following meetings to achieve sustainability goals. Contractor's designated sustainability professional responsible for GP documentation must participate in the following meetings to coordinate documentation completion.

a. Pre-Construction Conference: Discuss the following: HPSB Checklist, Sustainability Action Plan, Construction submittal requirements and schedule, individuals responsible for achieving each Guiding Principle Requirement.

b. Construction Progress Meetings: Review GP sustainability requirements with project team including contractor and sub-contractor representatives. Demonstrate GP documentation is being collected and updated to the Sustainability Notebook.

   (1) Facility Turnover Meetings: Review Sustainability Notebook for completeness and identify any outstanding issues relating to final documentation requirements.

   (2) Final Sustainability Notebook Review

-- End of Section --

THIS PAGE HAS BEEN INTENTIONALLY LEFT BLANK

SECTION 01 35 26

GOVERNMENTAL SAFETY REQUIREMENTS
02/12

PART 1 GENERAL

1.1 REFERENCES

The publications listed below form a part of this specification to the extent referenced. The publications are referred to within the text by the basic designation only.

AMERICAN SOCIETY OF SAFETY ENGINEERS (ASSE/SAFE)

ASSE/SAFE A10.32	(2012) Fall Protection
ASSE/SAFE A10.34	(2001; R 2012) Protection of the Public on or Adjacent to Construction Sites
ASSE/SAFE Z359.1	(2007) Safety Requirements for Personal Fall Arrest Systems, Subsystems and Components

ASME INTERNATIONAL (ASME)

ASME B30.22	(2010) Articulating Boom Cranes
ASME B30.3	(2012) Tower Cranes
ASME B30.5	(2014) Mobile and Locomotive Cranes
ASME B30.8	(2010) Floating Cranes and Floating Derricks

NATIONAL FIRE PROTECTION ASSOCIATION (NFPA)

NFPA 10	(2013) Standard for Portable Fire Extinguishers
NFPA 241	(2013) Standard for Safeguarding Construction,Alteration, and Demolition Operations
NFPA 306	(2014) Standard for Control of Gas Hazards on Vessels
NFPA 51B	(2014) Standard for Fire Prevention During Welding, Cutting, and Other Hot Work
NFPA 70	(2014; AMD 1 2013; Errata 1 2013; AMD 2 2013; Errata 2 2013; AMD 3 2014; Errata 3-4 2014; AMD 4-6 2014) National Electrical Code
NFPA 70E	(2015) Standard for Electrical Safety in the Workplace

U.S. ARMY CORPS OF ENGINEERS (USACE)

EM 385-1-1	(2014) Safety and Health Requirements Manual

U.S. NATIONAL ARCHIVES AND RECORDS ADMINISTRATION (NARA)

29 CFR 1910	Occupational Safety and Health Standards
29 CFR 1910.146	Permit-required Confined Spaces
29 CFR 1910.147	Control of Hazardous Energy (Lock Out/Tag Out)
29 CFR 1915	Confined and Enclosed Spaces and Other Dangerous Atmospheres in Shipyard Employment
29 CFR 1926	Safety and Health Regulations for Construction
29 CFR 1926.1400	Cranes and Derricks in Construction
29 CFR 1926.16	Rules of Construction
29 CFR 1926.500	Fall Protection
CPL 2.100	(1995) Application of the Permit-Required Confined Spaces (PRCS) Standards, 29 CFR 1910.146

U.S. NAVAL FACILITIES ENGINEERING COMMAND (NAVFAC)

NAVFAC P-307	(2009; Change 1 Mar 2011; Change 2 Aug 2011)Management of Weight Handling Equipment

1.2 DEFINITIONS

a. Competent Person for Fall Protection. A person who is capable of identifying hazardous or dangerous conditions in the personal fall arrest system or any component thereof, as well as their application and use with related equipment, and has the authority to take prompt corrective measures to eliminate the hazards of falling.

b. High Visibility Accident. Any mishap which may generate publicity or high visibility.

c. Medical Treatment. Treatment administered by a physician or by registered professional personnel under the standing orders of a physician. Medical treatment does not include first aid treatment even through provided by a physician or registered personnel.

d. Operating Envelope. The area surrounding any crane. Inside this "envelope" is the crane, the operator, riggers and crane walkers, rigging gear between the hook and the load, the load and the crane's supporting structure (ground, rail, etc.).

e. Recordable Injuries or Illnesses. Any work-related injury or illness

that results in:

(1) Death, regardless of the time between the injury and death, or the length of the illness;

(2) Days away from work (any time lost after day of injury/illness onset);

(3) Restricted work;

(4) Transfer to another job;

(5) Medical treatment beyond first aid;

(6) Loss of consciousness; or

(7) A significant injury or illness diagnosed by a physician or other licensed health care professional, even if it did not result in (1) through (6) above.

f. "USACE" property and equipment specified in USACE EM 385-1-1 should be interpreted as Government property and equipment.

g. Weight Handling Equipment (WHE) Accident. A WHE accident occurs when any one or more of the eight elements in the operating envelope fails to perform correctly during operation, including operation during maintenance or testing resulting in personnel injury or death; material or equipment damage; dropped load; derailment; two-blocking; overload; or collision, including unplanned contact between the load, crane, or other objects. A dropped load, derailment, two-blocking, overload and collision are considered accidents even though no material damage or injury occurs. A component failure (e.g., motor burnout, gear tooth failure, bearing failure) is not considered an accident solely due to material or equipment damage unless the component failure results in damage to other components (e.g., dropped boom, dropped load, roll over, etc.) Any mishap meeting the criteria described above shall be documented in both the Contractor Significant Incident Report (CSIR) and using the NAVFAC prescribed Navy Crane Center (NCC) form submitted within five days both as provided by the Contracting Officer. Comply with additional requirements and procedures for accidents in accordance with NAVFAC P-307, Section 12.

1.3 SUBMITTALS

Government approval is required for submittals with a "G" designation; submittals not having a "G" designation are for Contractor Quality Control approval. Submittals with an "S" are for inclusion in the Sustainability Notebook, in conformance to Section 01 33 29 SUSTAINABILITY REPORTING. Submit the following in accordance with Section 01 33 00 SUBMITTAL PROCEDURES:

SD-01 Preconstruction Submittals

Accident Prevention Plan (APP); G

Activity Hazard Analysis (AHA); G

Crane Critical Lift Plan; G

Proof of qualification for Crane Operators; G

SD-06 Test Reports

Notifications and Reports

Submit reports as their incidence occurs, in accordance with the requirements of the paragraph, "Notifications and Reports."

Accident Reports; G

Crane Reports

SD-07 Certificates

Confined Space Entry Permit

Hot work permit

Contractor Safety Self-Evaluation Checklist; G

Certificate of Compliance (Crane)

Submit one copy of each permit/certificate attached to each Daily Quality Control Report.

1.4 CONTRACTOR SAFETY SELF-EVALUATION CHECKLIST

Contracting Officer will provide a "Contractor Safety Self-Evaluation checklist" to the Contractor at the pre-construction conference. Complete the checklist monthly and submit with each request for payment voucher. An acceptable score of 90 or greater is required. Failure to submit the completed safety self-evaluation checklist or achieve a score of at least 90 may result in retention of up to 10 percent of the voucher. Additionally, provide a Monthly Exposure Report and attach to the monthly billing request. This report is a compilation of employee-hours worked each month for all site workers, both prime and subcontractor. Failure to submit the report may result in retention of up to 10 percent of the voucher. The Contracting Officer will submit a copy of the Contractor Safety Self-Evaluation and Monthly Exposure Report to the local safety and occupational health office.

1.5 REGULATORY REQUIREMENTS

In addition to the detailed requirements included in the provisions of this contract, comply with the most recent edition of USACE EM 385-1-1, and federal, and host nation laws, ordinances, criteria, rules and regulations. Submit matters of interpretation of standards to the appropriate administrative agency for resolution before starting work. Where the requirements of this specification, applicable laws, criteria, ordinances, regulations, and referenced documents vary, the most stringent requirements govern.

1.6 SITE QUALIFICATIONS, DUTIES AND MEETINGS

1.6.1 Personnel Qualifications

1.6.1.1 Site Safety and Health Officer (SSHO)

The SSHO must meet the requirements of EM 385-1-1 section 1 and ensure that the requirements of 29 CFR 1926.16 are met for the project. Provide a Safety oversight team that includes a minimum of one (1) person at each project site to function as the Site Safety and Health Officer (SSHO). The SSHO or an equally-qualified Designated Representative/alternate shall be at the work site at all times to implement and administer the Contractor's safety program and government-accepted Accident Prevention Plan. The SSHO's training, experience, and qualifications shall be as required by EM 385-1-1 paragraph 01.A.17, entitled SITE SAFETY AND HEALTH OFFICER (SSHO), and all associated sub-paragraphs.

A Competent Person shall be provided for all of the hazards identified in the Contractor's Safety and Health Program in accordance with the accepted Accident Prevention Plan, and shall be on-site at all times when the work that presents the hazards associated with their professional expertise is being performed. Provide the credentials of the Competent Persons(s) to the the Contracting Officer for acceptance in consultation with the Safety Office.

1.6.1.1.1 Contractor Quality Control (QC) Person:

The Contractor Quality Control Person cannot be the SSHO on this project, even though the QC has safety inspection responsibilities as part of the QC duties.

1.6.1.1.2 Additional Site Safety and Health Officer (SSHO) Requirements and Duties

The SSHO shall have completed the "40 Hour Construction Safety Hazard Awareness Training Course for Contractors".

1.6.1.2 Competent Person for Confined Space Entry

Provide a "Competent Person" to supervise the entry into each confined space. That individual must meet the requirements and definition of Competent Person as contained in EM 385-1-1.

Since this work involves marine operations that handle combustible or hazardous materials, this person shall have the ability to understand and follow through on the air sampling, PPE, and instructions of a Marine Chemist, Coast Guard authorized persons, or Certified Industrial Hygienist. All confined space and enclosed space work shall comply with NFPA 306, OSHA 29 CFR 1915, Subpart B, "Confined and Enclosed Spaces and Other Dangerous Atmospheres in Shipyard Employment" or as applicable, 29 CFR 1910.147 for general industry.

1.6.1.3 Crane Operators

Meet the crane operators requirements in USACE EM 385-1-1, Section 16 and Appendix I. In addition, for mobile cranes with Original Equipment Manufacturer (OEM) rated capacitates of 50,000 pounds or greater, designate crane operators as qualified by a source that qualifies crane operators (i.e., union, a government agency, or an organization that tests

and qualifies crane operators). Provide proof of current qualification. In addition, the Contractor shall comply with Contractor Operated Crane Requirements included in the latest revision of document NAVFAC P-307 Section 1.7.2 "Contractor Operated Cranes," and Appendix P, Figure P-1 and with 29 CFR 1926, Subpart CC.

1.6.2 Personnel Duties

1.6.2.1 Site Safety and Health Officer (SSHO)

The SSHO shall:

a. Conduct daily safety and health inspections and maintain a written log which includes area/operation inspected, date of inspection, identified hazards, recommended corrective actions, estimated and actual dates of corrections. Attach safety inspection logs to the Contractors' daily quality control report.

b. Conduct mishap investigations and complete required reports. Maintain the OSHA Form 300 and Daily Production reports for prime and sub-contractors.

c. Maintain applicable safety reference material on the job site.

d. Attend the pre-construction conference, pre-work meetings including preparatory inspection meeting, and periodic in-progress meetings.

e. Implement and enforce accepted APPS and AHAs.

f. Maintain a safety and health deficiency tracking system that monitors outstanding deficiencies until resolution. Post a list of unresolved safety and health deficiencies on the safety bulletin board.

g. Ensure sub-contractor compliance with safety and health requirements.

h. Maintain a list of hazardous chemicals on site and their material safety data sheets.

Failure to perform the above duties will result in dismissal of the superintendent, QC Manager, and/or SSHO, and a project work stoppage. The project work stoppage will remain in effect pending approval of a suitable replacement.

1.6.3 Meetings

1.6.3.1 Preconstruction Conference

a. Contractor representatives who have a responsibility or significant role in accident prevention on the project shall attend the preconstruction conference. This includes the project superintendent, site safety and health officer, quality control supervisor, or any other assigned safety and health professionals who participated in the development of the APP (including the Activity Hazard Analyses (AHAs) and special plans, program and procedures associated with it).

b. Discuss the details of the submitted APP to include incorporated plans, programs, procedures and a listing of anticipated AHAs that will be developed and implemented during the performance of the

contract. This list of proposed AHAs will be reviewed at the conference and an agreement will be reached between the Contractor and the Contracting Officer's representative as to which phases will require an analysis. In addition, establish a schedule for the preparation, submittal, review, and acceptance of AHAs to preclude project delays.

c. Deficiencies in the submitted APP will be brought to the attention of the Contractor at the preconstruction conference, and the Contractor shall revise the plan to correct deficiencies and re-submit it for acceptance. Do not begin work until there is an accepted APP.

1.6.3.2 Safety Meetings

Conduct and document meetings as required by EM 385-1-1. Attach minutes showing contract title, signatures of attendees and a list of topics discussed to the Contractors' daily quality control report.

1.7 ACCIDENT PREVENTION PLAN (APP)

Use a qualified person to prepare the written site-specific APP. Prepare the APP in accordance with the format and requirements of USACE EM 385-1-1 and as supplemented herein. Cover all paragraph and subparagraph elements in USACE EM 385-1-1, Appendix A, "Minimum Basic Outline for Accident Prevention Plan". Specific requirements for some of the APP elements are described below. The APP shall be job-specific and address any unusual or unique aspects of the project or activity for which it is written. The APP shall interface with the Contractor's overall safety and health program. Include any portions of the Contractor's overall safety and health program referenced in the APP in the applicable APP element and made site-specific. The Government considers the Prime Contractor to be the "controlling authority" for all work site safety and health of the subcontractors. Contractors are responsible for informing their subcontractors of the safety provisions under the terms of the contract and the penalties for noncompliance, coordinating the work to prevent one craft from interfering with or creating hazardous working conditions for other crafts, and inspecting subcontractor operations to ensure that accident prevention responsibilities are being carried out. The APP shall be signed by the person and firm (senior person) preparing the APP, the Contractor, the on-site superintendent, the designated site safety and health officer, the Contractor Quality control Manager, and any designated CSP or CIH.

Submit the APP to the Contracting Officer 15 calendar days prior to the date of the preconstruction conference for acceptance. Work cannot proceed without an accepted APP.

Once accepted by the Contracting Officer, the APP and attachments will be enforced as part of the contract. Disregarding the provisions of this contract or the accepted APP will be cause for stopping of work, at the discretion of the Contracting Officer, until the matter has been rectified.

Once work begins, changes to the accepted APP shall be made with the knowledge and concurrence of the Contracting Officer, project superintendent, SSHO and quality control manager. Should any severe hazard exposure, i.e. imminent danger, become evident, stop work in the area, secure the area, and develop a plan to remove the exposure and control the hazard. Notify the Contracting Officer within 24 hours of

discovery. Eliminate/remove the hazard. In the interim, take all necessary action to restore and maintain safe working conditions in order to safeguard onsite personnel, visitors, the public (as defined by ASSE/SAFE A10.34,) and the environment.

Copies of the accepted plan will be maintained at the Contracting Officer's office and at the job site.
Continuously review and ammend the APP, as necessary, throughout the life of the contract. Incorporate unusual or high-hazard activities not identified in the original APP as they are discovered.

1.7.1 EM 385-1-1 Contents

In addition to the requirements outlined in Appendix A of USACE EM 385-1-1, the following is required:

a. Names and qualifications (resumes including education, training, experience and certifications) of all site safety and health personnel designated to perform work on this project to include the designated site safety and health officer and other competent and qualified personnel to be used such as CSPs, CIHs, STSs, CHSTs. Specify the duties of each position.

b. Qualifications of competent and of qualified persons. As a minimum, designate and submit qualifications of competent persons for each of the following major areas: excavation; scaffolding; fall protection; hazardous energy; confined space; health hazard recognition, evaluation and control of chemical, physical and biological agents; personal protective equipment and clothing to include selection, use and maintenance.

c. Confined Space Entry Plan. Develop a confined and/or enclosed space entry plan in accordance with USACE EM 385-1-1, applicable OSHA standards 29 CFR 1910, 29 CFR 1915, and 29 CFR 1926, OSHA Directive CPL 2.100, and any other federal, state and local regulatory requirements identified in this contract. Identify the qualified person's name and qualifications, training, and experience. Delineate the qualified person's authority to direct work stoppage in the event of hazardous conditions. Include procedure for rescue by contractor personnel and the coordination with emergency responders. (If there is no confined space work, include a statement that no confined space work exists and none will be created.)

d. Crane Critical Lift Plan.
Prepare and sign weight handling critical lift plans for lifts over 75 percent of the capacity of the crane or hoist (or lifts over 50 percent of the capacity of a barge mounted mobile crane's hoists) at any radius of lift; lifts involving more than one crane or hoist; lifts of personnel; and lifts involving non-routine rigging or operation, sensitive equipment, or unusual safety risks. Submit 15 calendar days prior to on-site work and include the requirements of USACE EM 385-1-1, paragraph 16.H. and the following:

(1) For lifts of personnel, demonstrate compliance with the requirements of 29 CFR 1926.1400.

(2) For barge mounted mobile cranes, barge stability calculations identifying barge list and trim based on anticipated loading; and load charts based on calculated list and trim. The amount of list and trim

shall be within the crane manufacturer's requirements.

e. Fall Protection and Prevention (FP&P) Program Documentation. The program documentation shall be site specific and address all fall hazards in the work place and during different phases of construction. Address how to protect and prevent workers from falling to lower levels when they are exposed to fall hazards above 1.8 m. A qualified person for fall protection shall prepare and sign the program documentation. Include fall protection and prevention systems, equipment and methods employed for every phase of work, responsibilities, assisted rescue, self-rescue and evacuation procedures, training requirements, and monitoring methods. Revise the Fall Protection and Prevention Program documentation every six months for lengthy projects, reflecting any changes during the course of construction due to changes in personnel, equipment, systems or work habits. Keep and maintain the accepted Fall Protection and Prevention Program documentation at the job site for the duration of the project. Include the Fall Protection and Prevention Program documentation in the Accident Prevention Plan (APP).

   The FP&P Plan shall include a Rescue and Evacuation Plan in accordance with USACE EM 385-1-1, Section 21.M. The plan shall include a detailed discussion of the following: methods of rescue; methods of self-rescue; equipment used; training requirement; specialized training for the rescuers; procedures for requesting rescue and medical assistance; and transportation routes to a medical facility. Include the Rescue and Evacuation Plan in the Fall Protection and Prevention (FP&P) Plan, and as part of the Accident Prevention Plan (APP).

f. Site Demolition Plan. The safety and health aspects prepared in accordance with Section 02 41 00 DEMOLITION and referenced sources. Include engineering survey as applicable.

g. Excavation Plan. The safety and health aspects prepared in accordance with Section 31 23 00.00 20 EXCAVATION AND FILL.

1.8 ACTIVITY HAZARD ANALYSIS (AHA)

The Activity Hazard Analysis (AHA) format shall be in accordance with USACE EM 385-1-1, Section 1. Submit the AHA for review at least 15 calendar days prior to the start of each phase. Format subsequent AHAs as amendments to the APP. The analysis should be used during daily inspections to ensure the implementation and effectiveness of the activity's safety and health controls.

The AHA list will be reviewed periodically (at least monthly) at the Contractor supervisory safety meeting and updated as necessary when procedures, scheduling, or hazards change.

Develop the activity hazard analyses using the project schedule as the basis for the activities performed. Any activities listed on the project schedule will require an AHA. The AHAs will be developed by the contractor, supplier or subcontractor and provided to the prime contractor for submittal to the Contracting Officer.

1.9 DISPLAY OF SAFETY INFORMATION

Within one calendar day(s) after commencement of work, erect a safety bulletin board at the job site. Where size, duration, or logistics of project do not facilitate a bulletin board, an alternative method, acceptable to the Contracting Officer, that is accessible and includes all mandatory information for employee and visitor review, shall be deemed as meeting the requirement for a bulletin board. Include and maintain information on safety bulletin board as required by EM 385-1-1, section 01.A.06. Additional items required to be posted include:

a. Confined space entry permit.

b. Hot work permit.

1.10 SITE SAFETY REFERENCE MATERIALS

Maintain safety-related references applicable to the project, including those listed in the article "References." Maintain applicable equipment manufacturer's manuals.

1.11 EMERGENCY MEDICAL TREATMENT

Contractors will arrange for their own emergency medical treatment. Government has no responsibility to provide emergency medical treatment.

1.12 NOTIFICATIONS and REPORTS

1.12.1 Accident Notification

Notify the Contracting Officer as soon as practical, but no more than four hours after any accident meeting the definition of Recordable Injuries or Illnesses or High Visibility Accidents, property damage equal to or greater than $2,000, or any weight handling equipment accident. Within notification include contractor name; contract title; type of contract; name of activity, installation or location where accident occurred; date and time of accident; names of personnel injured; extent of property damage, if any; extent of injury, if known, and brief description of accident (to include type of construction equipment used, PPE used, etc.). Preserve the conditions and evidence on the accident site until the Government investigation team arrives on-site and Government investigation is conducted.

1.12.2 Accident Reports

a. Conduct an accident investigation for recordable injuries and illnesses, for Medical Treatment defined in paragraph DEFINITIONS, property damage accidents resulting in at least $20,000 in damages, and near misses as defined in EM 385-1-1, to establish the root cause(s) of the accident. Complete the applicable NAVFAC Contractor Incident Reporting System (CIRS), and electronically submit via the NAVFAC Enterprise Safety Applications Management System (ESAMS. The Contracting Officer will provide copies of any required or special forms.

b. Near Misses: Complete the applicable documentation in NAVFAC Contractor Incident Reporting System (CIRS), and electronically submit via the NAVFAC Enterprise Safety Applications Management System (ESAMS).

c. Conduct an accident investigation for any weight handling equipment accident (including rigging gear accidents) to establish the root cause(s) of the accident, complete the WHE Accident Report (Crane and Rigging Gear) form and provide the report to the Contracting Officer within 30 calendar days of the accident. Do not proceed with crane operations until cause is determined and corrective actions have been implemented to the satisfaction of the contracting officer. The Contracting Officer will provide a blank copy of the accident report form.

1.12.3 Crane Reports

Submit crane inspection reports required in accordance with USACE EM 385-1-1, Appendix I and as specified herein with Daily Reports of Inspections.

1.12.4 Certificate of Compliance

Provide a Certificate of Compliance for each crane entering an activity under this contract (see Contracting Officer for a blank certificate). State within the certificate that the crane and rigging gear meet applicable OSHA regulations (with the Contractor citing which OSHA regulations are applicable, e.g., cranes used in construction, demolition, or maintenance comply with 29 CFR 1926 and USACE EM 385-1-1 Section 16 and Appendix I. Certify on the Certificate of Compliance that the crane operator(s) is qualified and trained in the operation of the crane to be used. For cranes at DOD activities in foreign countries, certify that the crane and rigging gear conform to the appropriate host country safety standards. Also certify that all of its crane operators working on the DOD activity have been trained in the proper use of all safety devices (e.g., anti-two block devices). Post certifications on the crane.

1.13 HOT WORK

Submit and obtain a written permit prior to performing "Hot Work" (welding, cutting, etc.) or operating other flame-producing/spark producing devices, from the Fire Division. A permit is required from the Explosives Safety Office for work in and around where explosives are processed, stored, or handled. CONTRACTORS ARE REQUIRED TO MEET ALL CRITERIA BEFORE A PERMIT IS ISSUED. Provide at least two (2) twenty (20) pound 4A:20 BC rated extinguishers for normal "Hot Work". All extinguishers shall be current inspection tagged, approved safety pin and tamper resistant seal. It is also mandatory to have a designated FIRE WATCH for any "Hot Work" done at this activity. The Fire Watch shall be trained in accordance with NFPA 51B and remain on-site for a minimum of 30 minutes after completion of the task or as specified on the hot work permit.

When starting work in the facility, require personnel to familiarize themselves with the location of the nearest fire alarm boxes and place in memory the emergency Fire Division phone number. ANY FIRE, NO MATTER HOW SMALL, SHALL BE REPORTED TO THE RESPONSIBLE FIRE DIVISION IMMEDIATELY.

Obtain services from a NFPA Certified Marine Chemist for "HOT WORK" within or around flammable materials (such as fuel systems, welding/cutting on fuel pipes) or confined spaces (such as sewer wet wells, manholes, vaults, etc.) that have the potential for flammable or explosive atmospheres.

1.14 FACILITY OCCUPANCY CLOSURE

Streets, walks, and other facilities occupied and used by the Government shall not be closed or obstructed without written permission from the Contracting Officer.

1.15 SEVERE STORM PLAN

In the event of a severe storm warning, the Contractor must:

a. Secure outside equipment and materials and place materials that could be damaged in protected areas.

b. Check surrounding area, including roof, for loose material, equipment, debris, and other objects that could be blown away or against existing facilities.

c. Ensure that temporary erosion controls are adequate.

1.16 CONFINED SPACE ENTRY REQUIREMENTS.

Contractors entering and working in confined spaces while performing general industry work are required to follow the requirements of OSHA 29 CFR 1926 and comply with the requirements in Section 34 of EM 385-1-1, OSHA 29 CFR 1910, and OSHA 29 CFR 1910.146.

PART 2 PRODUCTS

Not used.

2.1 CONFINED SPACE SIGNAGE

Provide permanent signs integral to or securely attached to access covers for new permit-required confined spaces. Signs wording: "DANGER--PERMIT-REQUIRED CONFINED SPACE - DO NOT ENTER -" in bold letters a minimum of 25 mm in height and constructed to be clearly legible with all paint removed. The signal word "DANGER" shall be red and readable from 1520 mm.

PART 3 EXECUTION

3.1 CONSTRUCTION AND OTHER WORK

Comply with USACE EM 385-1-1, NFPA 70, NFPA 70E, NFPA 241, the APP, the AHA, Federal and State OSHA regulations, and other related submittals and activity fire and safety regulations. The most stringent standard prevails.

PPE is governed in all areas by the nature of the work the employee is performing. Use personal hearing protection at all times in designated noise hazardous areas or when performing noise hazardous tasks. Safety glasses must be carried/available on each person.

Mandatory PPE includes:

a. Hard Hat

b. Appropriate Safety Shoes

c. Reflective Vests

3.1.1 Hazardous Material Use

Each hazardous material must receive approval from the Contracting Office or their designated representative prior to being brought onto the job site or prior to any other use in connection with this contract. Allow a minimum of 10 working days for processing of the request for use of a hazardous material.

3.1.2 Hazardous Material Exclusions

Notwithstanding any other hazardous material used in this contract, radioactive materials or instruments capable of producing ionizing/non-ionizing radiation (with the exception of radioactive material and devices used in accordance with USACE EM 385-1-1 such as nuclear density meters for compaction testing and laboratory equipment with radioactive sources) as well as materials which contain asbestos, mercury or polychlorinated biphenyls, di-isocynates, lead-based paint are prohibited. The Contracting Officer, upon written request by the Contractor, may consider exceptions to the use of any of the above excluded materials. Low mercury lamps used within fluorescent lighting fixtures are allowed as an exception without further Contracting Officer approval. Notify the Radiation Safety Officer (RSO) prior to excepted items of radioactive material and devices being brought on base.

3.1.3 Unforeseen Hazardous Material

The design should have identified materials such as PCB, lead paint, and friable and non-friable asbestos and other OSHA regulated chemicals (i.e. 29 CFR Part 1910.1000). If material, not indicated, that may be hazardous to human health upon disturbance during construction operations is encountered, stop that portion of work and notify the Contracting Officer immediately. Within 14 calendar days the Government will determine if the material is hazardous. If material is not hazardous or poses no danger, the Government will direct the Contractor to proceed without change. If material is hazardous and handling of the material is necessary to accomplish the work, the Government will issue a modification pursuant to "FAR 52.243-4, Changes" and "FAR 52.236-2, Differing Site Conditions."

3.2 PRE-OUTAGE COORDINATION MEETING

Apply for utility outages at least 14 days in advance. As a minimum, the request should include the location of the outage, utilities being affected, duration of outage and any necessary sketches. Special requirements for electrical outage requests are contained elsewhere in this specification section. Once approved, and prior to beginning work on the utility system requiring shut down, attend a pre-outage coordination meeting with the Contracting Officer to review the scope of work and the lock-out/tag-out procedures for worker protection. No work will be performed on energized electrical circuits unless proof is provided that no other means exist.

3.3 CONTROL OF HAZARDOUS ENERGY (LOCKOUT/TAGOUT)

Ensure that each employee is familiar with and complies with these procedures and USACE EM 385-1-1, Section 12, Control of Hazardous Energy.

3.4 FALL HAZARD PROTECTION AND PREVENTION PROGRAM

Establish a fall protection and prevention program, for the protection of all employees exposed to fall hazards. Within the program include company policy, identify responsibilities, education and training requirements, fall hazard identification, prevention and control measures, inspection, storage, care and maintenance of fall protection equipment and rescue and evacuation procedures in accordance with ASSE/SAFE Z359.1.

3.4.1 Training

Institute a fall protection training program. As part of the Fall Hazard Protection and Prevention Program, provide training for each employee who might be exposed to fall hazards. Provide training by a competent person for fall protection in accordance with USACE EM 385-1-1, Section 21.B.

3.4.2 Fall Protection Equipment and Systems

Enforce use of the fall protection equipment and systems designated for each specific work activity in the Fall Protection and Prevention Plan and/or AHA at all times when an employee is exposed to a fall hazard. Protect employees from fall hazards as specified in EM 385-1-1, Section 21. In addition to the required fall protection systems, safety skiff, personal floatation devices, life rings etc., are required when working above or next to water in accordance with USACE EM 385-1-1, Paragraphs 21.N through 21.N.04. Personal fall arrest systems are required when working from an articulating or extendible boom, swing stages, or suspended platform. In addition, personal fall arrest systems are required when operating other equipment such as scissor lifts if the work platform is capable of being positioned outside the wheelbase. The need for tying-off in such equipment is to prevent ejection of the employee from the equipment during raising, lowering, or travel. Fall protection must comply with 29 CFR 1926.500, Subpart M, USACE EM 385-1-1 and ASSE/SAFE A10.32.

3.4.2.1 Personal Fall Arrest Equipment

Personal fall arrest equipment, systems, subsystems, and components shall meet ASSE/SAFE Z359.1. Only a full-body harness with a shock-absorbing lanyard or self-retracting lanyard is an acceptable personal fall arrest body support device. Body belts may only be used as a positioning device system (for uses such as steel reinforcing assembly and in addition to an approved fall arrest system). Harnesses shall have a fall arrest attachment affixed to the body support (usually a Dorsal D-ring) and specifically designated for attachment to the rest of the system. Only locking snap hooks and carabiners shall be used. Webbing, straps, and ropes shall be made of synthetic fiber. The maximum free fall distance when using fall arrest equipment shall not exceed 1.8 m. The total fall distance and any swinging of the worker (pendulum-like motion) that can occur during a fall shall always be taken into consideration when attaching a person to a fall arrest system.

3.4.3 Fall Protection for Roofing Work

Implement fall protection controls based on the type of roof being constructed and work being performed. Evaluate the roof area to be accessed for its structural integrity including weight-bearing capabilities for the projected loading.

a. Low Sloped Roofs:

(1) For work within 1.8 m of an edge, on low-slope roofs, protect personnel from falling by use of personal fall arrest systems, guardrails, or safety nets. A safety monitoring system is not adequate fall protection and is not authorized.

(2) For work greater than 1.8 m from an edge, erect and install warning lines in accordance with 29 CFR 1926.500 and USACE EM 385-1-1.

b. Steep-Sloped Roofs: Work on steep-sloped roofs requires a personal fall arrest system, guardrails with toe-boards, or safety nets. This requirement also includes residential or housing type construction.

3.4.4 Horizontal Lifelines

Design, install, certify and use under the supervision of a qualified person horizontal lifelines for fall protection as part of a complete fall arrest system which maintains a safety factor of 2 (29 CFR 1926.500).

3.4.5 Guardrails and Safety Nets

Design, install and use guardrails and safety nets in accordance with EM 385-1-1 and 29 CFR 1926 Subpart M.

3.4.6 Rescue and Evacuation Procedures

When personal fall arrest systems are used, ensure that the mishap victim can self-rescue or can be rescued promptly should a fall occur. Prepare a Rescue and Evacuation Plan and include a detailed discussion of the following: methods of rescue; methods of self-rescue; equipment used; training requirement; specialized training for the rescuers; procedures for requesting rescue and medical assistance; and transportation routes to a medical facility. Include the Rescue and Evacuation Plan within the Activity Hazard Analysis (AHA) for the phase of work, in the Fall Protection and Prevention (FP&P) Plan, and the Accident Prevention Plan (APP).

3.5 SCAFFOLDING

Provide employees with a safe means of access to the work area on the scaffold. Climbing of any scaffold braces or supports not specifically designed for access is prohibited. Access scaffold platforms greater than 6 m maximum in height by use of a scaffold stair system. Do not use vertical ladders commonly provided by scaffold system manufacturers for accessing scaffold platforms greater than 6 m maximum in height. The use of an adequate gate is required. Ensure that employees are qualified to perform scaffold erection and dismantling. Do not use scaffold without the capability of supporting at least four times the maximum intended load or without appropriate fall protection as delineated in the accepted fall protection and prevention plan. Stationary scaffolds must be attached to structural building components to safeguard against tipping forward or backward. Give special care to ensure scaffold systems are not overloaded. Side brackets used to extend scaffold platforms on self-supported scaffold systems for the storage of material is prohibited. The first tie-in shall be at the height equal to 4 times the width of the smallest dimension of the scaffold base. Place work platforms on mud sills. Scaffold or work platform erectors shall have fall

protection during the erection and dismantling of scaffolding or work platforms that are more than six feet. Delineate fall protection requirements when working above six feet or above dangerous operations in the Fall Protection and Prevention (FP&P) Plan and Activity Hazard Analysis (AHA) for the phase of work.

3.6 EQUIPMENT

3.6.1 Material Handling Equipment

a. Material handling equipment such as forklifts shall not be modified with work platform attachments for supporting employees unless specifically delineated in the manufacturer's printed operating instructions.

b. The use of hooks on equipment for lifting of material must be in accordance with manufacturer's printed instructions. Additionally, when material handling equipment is used as a crane it must meet NAVFAC P-307 requirements in Sections 1.7.2, "Contractor Operated Cranes," and 12, "Investigation and Reporting of Crane and Rigging Gear Accidents."

c. Operators of forklifts or power industrial trucks shall be licensed in accordance with OSHA.

3.6.2 Weight Handling Equipment

a. Equip cranes and derricks as specified in EM 385-1-1, section 16.

b. Notify the Contracting Officer 15 days in advance of any cranes entering the activity so that necessary quality assurance spot checks can be coordinated. Contractor's operator shall remain with the crane during the spot check.

c. Comply with the crane manufacturer's specifications and limitations for erection and operation of cranes and hoists used in support of the work. Perform erection under the supervision of a designated person (as defined in ASME B30.5). Perform all testing in accordance with the manufacturer's recommended procedures.

d. Comply with ASME B30.5 for mobile and locomotive cranes, ASME B30.22 for articulating boom cranes, ASME B30.3 for construction tower cranes, and ASME B30.8 for floating cranes and floating derricks.

e. Under no circumstance shall a Contractor make a lift at or above 90 percent of the cranes rated capacity in any configuration.

f. When operating in the vicinity of overhead transmission lines, operators and riggers shall be alert to this special hazard and follow the requirements of USACE EM 385-1-1 Section 11, NAVFAC P-307 Figure 10-3 and ASME B30.5 or ASME B30.22 as applicable.

g. Do not crane suspended personnel work platforms (baskets) unless the Contractor proves that using any other access to the work location would provide a greater hazard to the workers or is impossible. Do not lift personnel with a line hoist or friction crane.

h. Inspect, maintain, and recharge portable fire extinguishers as specified in NFPA 10, Standard for Portable Fire Extinguishers.

i. All employees must keep clear of loads about to be lifted and of suspended loads.

j. Use cribbing when performing lifts on outriggers.

k. The crane hook/block must be positioned directly over the load. Side loading of the crane is prohibited.

l. A physical barricade must be positioned to prevent personnel from entering the counterweight swing (tail swing) area of the crane.

m. Certification records which include the date of inspection, signature of the person performing the inspection, and the serial number or other identifier of the crane that was inspected shall always be available for review by Contracting Officer personnel.

n. Written reports listing the load test procedures used along with any repairs or alterations performed on the crane shall be available for review by Contracting Officer personnel.

o. Certify that all crane operators have been trained in proper use of all safety devices (e.g. anti-two block devices).

p. Take steps to ensure that wind speed does not contribute to loss of control of the load during lifting operations. Prior to conducting lifting operations set a maximum wind speed at which a crane can be safely operated based on the equipment being used, the load being lifted, experience of operators and riggers, and hazards on the work site. This maximum wind speed determination shall be included as part of the activity hazard analysis plan for that operation.

3.6.3 Equipment and Mechanized Equipment

a. Proof of qualifications for operator shall be kept on the project site for review.

b. Manufacture specifications or owner's manual for the equipment shall be on-site and reviewed for additional safety precautions or requirements that are sometimes not identified by OSHA or USACE EM 385-1-1. Incorporate such additional safety precautions or requirements into the AHAs.

3.6.4 USE OF EXPLOSIVES

Explosives shall not be used or brought to the project site without prior written approval from the Contracting Officer. Such approval shall not relieve the Contractor of responsibility for injury to persons or for damage to property due to blasting operations.

Storage of explosives, when permitted on Government property, shall be only where directed and in approved storage facilities. These facilities shall be kept locked at all times except for inspection, delivery, and withdrawal of explosives.

3.7 EXCAVATIONS

Soil classification must be performed by a competent person in accordance

with 29 CFR 1926 and EM 385-1-1.

3.7.1 Utility Locations

All underground utilities in the work area must be positively identified by a third party, independent, private utility locating company in addition to any station locating service and coordinated with the station utility department.

3.7.2 Utility Location Verification

Physically verify underground utility locations, including utility depth, by hand digging using wood or fiberglass handled tools when any adjacent construction work is expected to come within three feet of the underground system.

3.7.3 Utilities Within and Under Concrete, Bituminous Asphalt, and Other Impervious Surfaces

Utilities located within and under concrete slabs or pier structures, bridges, parking areas, and the like, are extremely difficult to identify. Whenever contract work involves chipping, saw cutting, or core drilling through concrete, bituminous asphalt or other impervious surfaces, the existing utility location must be coordinated with station utility departments in addition to location and depth verification by a third party, independent, private locating company. The third party, independent, private locating company shall locate utility depth by use of Ground Penetrating Radar (GPR), X-ray, bore scope, or ultrasound prior to the start of demolition and construction. Outages to isolate utility systems must be used in circumstances where utilities are unable to be positively identified. The use of historical drawings does not alleviate the contractor from meeting this requirement.

3.8 ELECTRICAL

3.9.1 Portable Extension Cords

Size portable extension cords in accordance with manufacturer ratings for the tool to be powered and protected from damage. Immediately removed from service all damaged extension cords. Portable extension cords shall meet the requirements of EM 385-1-1, NFPA 70E, and OSHA electrical standards.

3.9 WORK IN CONFINED SPACES

Comply with the requirements in Section 34 of USACE EM 385-1-1, OSHA 29 CFR 1910, OSHA 29 CFR 1910.146, OSHA Directive CPL 2.100 and OSHA 29 CFR 1926. Any potential for a hazard in the confined space requires a permit system to be used.

a. Entry Procedures. Prohibit entry into a confined space by personnel for any purpose, including hot work, until the qualified person has conducted appropriate tests to ensure the confined or enclosed space is safe for the work intended and that all potential hazards are controlled or eliminated and documented. (See Section 34 of USACE EM 385-1-1 for entry procedures.) All hazards pertaining to the space

shall be reviewed with each employee during review of the AHA.

b. Forced air ventilation is required for all confined space entry operations and the minimum air exchange requirements must be maintained to ensure exposure to any hazardous atmosphere is kept below its' action level.

c. Sewer wet wells require continuous atmosphere monitoring with audible alarm for toxic gas detection.

-- End of Section --

THIS PAGE HAS BEEN INTENTIONALLY LEFT BLANK

SECTION 01 35 29.13

HEALTH, SAFETY, AND EMERGENCY RESPONSE PROCEDURES FOR CONTAMINATED SITES
01/08

PART 1 GENERAL

1.1 REFERENCES

The publications listed below form a part of this specification to the extent referenced. The publications are referred to within the text by the basic designation only.

AMERICAN PETROLEUM INSTITUTE (API)

API RP 2219	(2005; R 2012) Safe Operation of Vacuum Trucks in Petroleum Service

INTERNATIONAL SAFETY EQUIPMENT ASSOCIATION (ISEA)

ANSI/ISEA Z358.1	(2014) American National Standard for Emergency Eyewash and Shower Equipment

NATIONAL INSTITUTE FOR OCCUPATIONAL SAFETY AND HEALTH (NIOSH)

NIOSH 85-115	(1985) Occupational Safety and Health Guidance Manual for Hazardous Waste Site Activities

U.S. ARMY CORPS OF ENGINEERS (USACE)

EM 385-1-1	(2014) Safety and Health Requirements Manual

U.S. NATIONAL ARCHIVES AND RECORDS ADMINISTRATION (NARA)

29 CFR 1910	Occupational Safety and Health Standards
29 CFR 1910.120	Hazardous Waste Operations and Emergency Response
29 CFR 1926	Safety and Health Regulations for Construction
29 CFR 1926.65	Hazardous Waste Operations and Emergency Response
49 CFR 171	General Information, Regulations, and Definitions
49 CFR 172	Hazardous Materials Table, Special Provisions, Hazardous Materials Communications, Emergency Response Information, and Training Requirements

1.2 DESCRIPTION OF WORK

This section requires Contractors to implement practices and procedures for working safely and in compliance with OSHA and USACE regulation while performing cleanup activities on uncontrolled hazardous waste sites.

1.3 SUBMITTALS

Government approval is required for submittals with a "G" designation; submittals not having a "G" designation are for Contractor Quality Control approval. Submittals with an "S" are for inclusion in the Sustainability Notebook, in conformance to Section 01 33 29 SUSTAINABILITY REPORTING. Submit the following in accordance with Section 01 33 00 SUBMITTAL PROCEDURES:

SD-02 Shop Drawings

Work Zones; G
Decontamination Facilities; G

SD-03 Product Data

Exposure Monitoring/Air Sampling Program
Site Control Log
Employee Certificates

1.4 REGULATORY REQUIREMENTS

Comply with EM 385-1-1, OSHA requirements in 29 CFR 1910 and 29 CFR 1926 with work performed under this contract, especially OSHA's Standards 29 CFR 1926.65 and 29 CFR 1910.120 and state specific OSHA requirements where applicable. Submit to the Contracting Officer for resolution matters of interpretation of standards before starting work. The most stringent requirements apply where the requirements of this specification, applicable laws, criteria, ordinances, regulations, and referenced documents vary.

1.5 PRECONSTRUCTION SAFETY CONFERENCE

Conduct a preconstruction safety conference prior to the start of site activities and after submission of the Contractor's APP/SSHP. The objective of the meeting will be to discuss health and safety concerns related to the impending work, discuss project health and safety organization and expectations, review and answer comments and concerns regarding the APP/SSHP or other health and safety concerns the Contractor may have. Ensure that those individuals responsible for health and safety at the project level are available and attend this meeting.

1.6 ACCIDENT PREVENTION PLAN/SITE SAFETY AND HEALTH PLAN (APP/SSHP)

Develop and implement a Site Safety and Health Plan and attach to the Accident Prevention Plan (APP) as an appendix (APP/SSHP). Address all occupational safety and health hazards (traditional construction as well as contaminant-related hazards) associated with cleanup operations within the APP/SSHP. Cover each SSHP element in section 28.A.01 of EM 385-1-1 and each APP element in Appendix A of EM 385-1-1. There are overlapping elements in Section 28.A.01 and Appendix A of EM 385-1-1. SSHP appendix elements that overlap with APP elements need not be duplicated in the APP/SSHP provided each SOH issue receives adequate attention and is

documented in the APP/SSHP. The APP/SSHP is a dynamic document, subject to change as project operations/execution change. The APP/SSHP will require modification to address changing and previously unidentified health and safety conditions. It is the Contractor's responsibility to ensure that the APP/SSHP is updated accordingly. Submit amendments to the APP/SSHP to the COR as the APP/SSHP is updated. For long duration projects resubmit the APP/SSHP to the COR annually for review. The APP/SSHP must contain all updates.

1.6.1 Acceptance and Modifications

Prior to submittal, the APP/SSHP must be signed and dated by the Safety and Health Manager and the Site Superintendent. Submit for review 15 days prior to the Preconstruction Safety Conference. Deficiencies in the APP/SSHP will be discussed at the preconstruction safety conference, and be revised to correct the deficiencies and resubmitted for acceptance. Onsite work must not begin until the plan has been accepted. Maintain a copy of the written APP/SSHP onsite. Changes and modifications to must be made with the knowledge and concurrence of the Safety and Health Manager, the Site Superintendent, and the Contracting Officer. Bring to the attention of the Safety and Health Manager, the Site Superintendent, and the Contracting Officer any unforeseen hazard that becomes evident during the performance of the work, through the Site Safety and Health Officer (SSHO) for resolution as soon as possible. In the interim, take necessary action to re-establish and maintain safe working conditions in order to safeguard onsite personnel, visitors, the public, and the environment. Disregard for the provisions of this specification or the accepted APP/SSHP will be cause for stopping work until the matter has been rectified.

1.6.2 Availability

Make available the APP/SSHP in accordance with 29 CFR 1910.120, (b)(1)(v) and 29 CFR 1926.65, (b)(1)(v).

1.7 TASK SPECIFIC HAZARDS, INITIAL PPE, HAZWOPER MEDICAL SURVEILLANCE AND TRAINING APPLICABILITY

Task specific occupational hazards, task specific HAZWOPER medical surveillance and training applicability and task specific initial PPE requirements for the project are listed on the Task Hazard and Control Sheets at the end of this section. It is the Contractor's responsibility to reevaluate occupational safety and health hazards as the work progresses and to adjust the PPE and onsite operations, if necessary, so that the work is performed safely and in compliance with occupational safety and health regulations.

1.8 STAFF ORGANIZATION, QUALIFICATION AND RESPONSIBILITIES

1.8.1 Safety and Health Manager

Safety and Health Manager must be an Industrial Hygienist certified by the American Board of Industrial Hygiene.

1.8.1.1 Additional Qualifications

The Safety and Health Manager must have the following additional qualifications:

a. A minimum of 3 years experience in developing and implementing safety and health programs in the hazardous waste disposal industry.

b. Documented experience in supervising professional and technician level personnel.

c. Documented experience in developing worker exposure assessment programs and air monitoring programs and techniques.

d. Documented experience in managing personal protective equipment programs and conducting PPE hazard evaluations for the types of activities and hazards likely to be encountered on the project.

e. Working knowledge of state and Federal occupational safety and health regulations.

1.8.1.2 Responsibilities and Duties

The Safety and Health Manager shall:

a. Be responsible for the development, implementation, oversight, and enforcement of the APP/SSHP.

b. Sign and date the APP/SSHP prior to submittal.

c. Conduct initial site-specific training.

d. Be available for consultation during the first 3 days of remedial activities and at the startup of each new major phase of work.

e. Visit the site as needed and at least once per month for the duration of activities, to audit the effectiveness of the APP/SSHP.

f. Be available for emergencies.

g. Provide onsite consultation as needed to ensure the APP/SSHP is fully implemented.

h. Coordinate any modifications to the APP/SSHP with the Site Superintendent, the SSHO, and the Contracting Officer.

i. Provide continued support for upgrading/downgrading of the level of personal protection.

j. Be responsible for evaluating air monitoring data and recommending changes to engineering controls, work practices, and PPE.

k. Review accident reports and results of daily inspections.

l. Serve as a member of the Contractor's quality control staff.

1.8.2 Site Safety and Health Officer

See Section 01 35 26 GOVERNMENT SAFETY REQUIREMENTS.

1.8.3 Occupational Physician

Utilize the services of a licensed physician, who is certified in occupational medicine by the American Board of Preventative Medicine, or

who, by necessary training and experience is Board eligible. The physician must be familiar with this site's hazards and the scope of this project. Include the medical consultant's name, qualifications, and knowledge of the site's conditions and proposed activities in the APP/SSHP. The physician will be responsible for the determination of medical surveillance protocols and for review of examination/test results performed in compliance with 29 CFR 1910.120, (f) and 29 CFR 1926.65, (f) and paragraph MEDICAL SURVEILLANCE.

1.8.4 Persons Certified in First Aid and CPR

At least two persons who are currently certified in first aid and CPR by the American Red Cross or other approved agency must be onsite at all times during site operations. They must be trained in universal precautions and the use of PPE as described in the Bloodborne Pathogens Standard of 29 CFR 1910, Section .1030. These persons may perform other duties but will be immediately available to render first aid when needed.

1.8.5 Safety and Health Technicians

For each work crew in the exclusion zone, one person, designated as a Safety and Health technician, must perform activities such as air monitoring, decontamination, and safety oversight on behalf of the SSHO. They must have appropriate training equivalent to the SSHO in each specific area for which they have responsibility and report to and be under the supervision of the SSHO.

1.9 TRAINING

Meet the following requirements in the Contractor's training program for workers performing cleanup operations and who will be exposed to contaminants.

1.9.1 General Hazardous Waste Operations Training

All Personnel performing duties with potential for exposure to onsite contaminants must meet and maintain the following 29 CFR 1910.120/ 29 CFR 1926.65 (e) training requirements:

a. 40 hours of off site hazardous waste instruction.

b. 3 days actual field experience under the direct supervision of a trained, experienced supervisor.

c. 8 hours refresher training annually.

Onsite supervisors must have an additional 8 hours management and supervisor training specified in 29 CFR 1910.120/29 CFR 1926.65 (e) (4).

1.9.2 Pre-entry Briefing

Prior to commencement of onsite field activities, all site employees, including those assigned only to the Support Zone, must attend a site-specific safety and health training session. This session will be conducted by the Safety and Health Manager and the Site Safety and Health Officer to ensure that all personnel are familiar with requirements and responsibilities for maintaining a safe and healthful work environment. Thoroughly discuss procedures and contents of the accepted APP/SSHP and Sections 01.B.02 and 28.D.03 of EM 385-1-1 . Each employee must sign a

training log to acknowledge attendance and understanding of the training. Notify the Contracting Officer at least 5 days prior to the initial site-specific training session so government personnel involved in the project may attend.

1.9.3 Periodic Sessions

Conduct periodic onsite training by the SSHO at least weekly for personnel assigned to work at the site during the following week. Address safety and health procedures, work practices, any changes in the APP/SSHP, activity hazard analyses, work tasks, or schedule; results of previous week's air monitoring, review of safety discrepancies and accidents. Convene a meeting prior to implementation of the change must be convened should an operational change affecting onsite field work be made, to explain safety and health procedures. Conduct a site-specific training sessions for new personnel, visitors, and suppliers by the SSHO using the training curriculum outlines developed by the Safety and Health Manager. Each employee must sign a training log to acknowledge attendance and understanding of the training.

1.10 PERSONAL PROTECTIVE EQUIPMENT

1.10.1 Site Specific PPE Program

Provide onsite personnel exposed to contaminants with appropriate personal protective equipment. Components of levels of protection (B, C, D and modifications) must be relevant to site-specific conditions, including heat and cold stress potential and safety hazards. Use only respirators approved by NIOSH. Commercially available PPE, used to protect against chemical agent, must be approved by the director of Army Safety through the Chemical Agent Safety and Health Policy Action Committee (CASHPAC) . Keep protective equipment and clothing clean and well maintained. Include site-specific procedures to determine PPE program effectiveness and for onsite fit-testing of respirators, cleaning, maintenance, inspection, and storage of PPE within the PPE section of the APP/SSHP.

1.10.2 Levels of Protection

The Safety and Health Manager must establish and evaluate as the work progresses the levels of protection for each work activity. Also establish action levels for upgrade or downgrade in levels of PPE. Describe in the SSHP the protocols and the communication network for changing the level of protection. Address air monitoring results, potential for exposure, changes in site conditions, work phases, job tasks, weather, temperature extremes, individual medical considerations, etc. within the PPE evaluation protocol.

1.10.2.1 Initial PPE Components

The following items constitute initial minimum protective clothing and equipment ensembles.

Level D	
Modified Level D	

1.11 MEDICAL SURVEILLANCE PROGRAM

Meet 29 CFR 1910.120/29 CFR 1926.65 (f) and the following requirements for medical surveillance program for workers performing cleanup operations and who will be exposed to contaminants. Assure the Occupational Physician or the physician's designee performs the physical examinations and reviews examination results. Participation in the medical surveillance program will be without cost to the employee, without loss of pay and at a reasonable time and place.

1.11.1 Frequency of Examinations

Medical surveillance program participants must receive medical examinations and consultations on the following schedule:

a. Every 12 months

b. If and when the participant develops signs and symptoms indicating a possible overexposure due to an uncontrolled release of a hazardous substance on the project.

c. Upon termination or reassignment to a job where medical surveillance program participation is not required, unless his/her previous annual examination/consultation was less than 6 months prior to reassignment or termination.

d. On a schedule specified by the occupational physician.

1.11.2 Content of Physical Examinations/Consultation

Verify the following information about medical surveillance program participants:

a. Baseline health conditions and exposure history.

b. Allergies/sensitivity/susceptibility to hazardous substances exposure.

c. Ability to wear personal protective equipment inclusive of NIOSH certified respirators under extreme temperature conditions.

d. Fitness to perform assigned duties.

Provide the occupational physician with the following information for each medical surveillance program participant:

a. Information on the employee's anticipated or measured exposure.

b. A description of any PPE used or to be used.

c. A description of the employee's duties as they relate to the employee's exposures (including physical demands on the employee and heat/cold stress).

d. A copy of 29 CFR 1910.120, or 29 CFR 1926.65.

e. Information from previous examinations not readily available to the examining physician.

f. A copy of Section 5.0 of NIOSH 85-115.

g. Information required by 29 CFR 1910 Section .134.

1.11.3 Physician's Written Opinion

Obtain and furnish to the Safety and Health Manager; and the employee before work begins, a copy of the physician's written opinion for each employee. Address the employee's ability to perform hazardous waste site remediation work and containing the following:

a. The physician's verification of the employee's fitness to perform duties as well as recommended limitations upon the employee's assigned work and/or PPE usage.

b. The physician's opinion about increased risk to the employee's health resulting from work; and

c. A statement that the employee has been informed and advised about the results of the examination.

1.11.4 Employee Certificates

Provided on employee certificates for each worker performing cleanup operations with potential for contaminant-related occupational exposure signed by the safety and health manager and the occupational physician indicating the workers meet the training and medical surveillance requirements of this contract.

1.12 EXPOSURE MONITORING/AIR SAMPLING PROGRAM

Prepare and implement by the Safety and Health Manager an exposure monitoring/air sampling program to identify and quantify safety and health hazards and airborne levels of hazardous substances in order to assure proper selection of engineering controls, work practices and personal protective equipment for affected site personnel. Include action levels for upgrading/downgrading PPE in the program. Submit personnel exposure monitoring/sampling results. Monitor for the following gasses and vapors .

Parameter	Instrument	Frequency & Duration	Work Phase
LFL, UFL, O2 and CO	Combustible Gas Indicator with O2 and Co Sensors	Continuous	Hot Work
Volatile Organic Compounds (VOCs)	Photo-ionization detector (PID) or Flame-ionization detector (FID)	Continuous	Tank Cleaning, Excavation in indicated areas or suspected contamination

1.13 HEAT STRESS MONITORING AND MANAGEMENT

Document in the APP/SSHP and implement the procedures and practices in section 06.J. in EM 385-1-1 to monitor and manage heat stress.

1.14 SPILL AND DISCHARGE CONTROL

Develop and implement written spill and discharge containment/control procedures. Address radioactive wastes, shock sensitive wastes, laboratory waste packs, material handling equipment, as well as drum and container handling, opening, sampling, shipping and transport. Describe prevention measures, such as building berms or dikes; spill control measures and material to be used (e.g. booms, vermiculite); location of the spill control material; personal protective equipment required to cleanup spills; disposal of contaminated material; and who is responsible to report the spill. Storage of contaminated material or hazardous materials must be appropriately bermed, diked and/or contained to prevent any spillage of material on uncontaminated soil. If the spill or discharge is reportable, and/or human health or the environment are threatened, the Contracting Officer must be notified as soon as possible.

1.15 MATERIALS TRANSFER SAFETY

Remove liquids and residues from the tanks using explosion-proof or air-driven pumps. Bond to the tank and ground pump motors and suction hoses to prevent electrostatic ignition hazards. Use of a hand pump will be permitted to remove the last of the liquid from the bottom of the tanks. If a vacuum truck is used for removal of liquids or residues, the area of operation for the vacuum truck must be vapor free. locate the truck upwind from the tank and outside the path of probable vapor travel. Discharge the vacuum pump exhaust gases through a hose of adequate size and length downwind of the truck and tank area. Vacuum truck operating and safety practices must conform to API RP 2219. Collect tank residues in drums, tanks, or tank trucks labeled according to 49 CFR 171 and 49 CFR 172 and disposed of as specified. Disconnect and drain fittings and lines of their contents after the materials have been transferred and the tanks have been exposed. Do not spill contents into the environment during cutting or disconnecting of tank fittings. Transfer materials drained into DOT-approved drums for storage and/or transportation. Only non-sparking or non-heat producing tools shall be used to disconnect and drain or to cut through tank fittings. Electrical equipment (e.g., pumps, portable hand tools, etc.) used for tank preparation must be explosion-proof. Following cutting or disconnecting of the fittings, plug openings leading to the tanks.

1.16 HOT WORK

Hot work will not be permitted on or within the tanks or anywhere else not previously specified as a hot work area, except as outlined herein. Prior to conducting hot work, a hot work permit must be prepared by the person to be conducting the hot work and reviewed and signed off by the Contractor's qualified person. An additional hot work permit may need to be obtained from local authorities or in the case of military or other federal installations, the fire marshal. An example format for a hot work permit must be included in the AAPP/SSHP. Describe compliance with the following procedures. After tank interiors have been decontaminated, hot work may be conducted only when the tank is inerted, and to the extent necessary to begin dismantling the tanks. After decontamination of tank interiors, hot work must not be performed unless monitoring indicates atmospheres within and immediately surrounding the tanks are less than 8 percent oxygen inside the tank and less than 10 percent of the LFL outside the tank; continuous monitoring must continue until the hot work is completed. The hot work prohibition includes welding, cutting, grinding, sawing, or other similar operations which could be expected to potentially

generate combustion-producing temperatures or sparks, or which could produce potentially hazardous fumes or vapors. Designate an individual at each hot work site as a fire watch. This person's sole responsibility is to monitor the hot work and have immediate access to the fire extinguisher located at each hot work site. A new permit must be obtained at the start of each work shift during which hot work will be conducted.

1.17 IGNITION SOURCES

Ignition sources shall be controlled in the Exclusion Zone (EZ) and the Contamination Reduction Zone (CRZ). Smoking and open flames are prohibitedin the EZ and CRZ, and within 50 feet of flammable and combustible materials. Equipment with combustible engines, including the exhausts, shall be maintained upwind from flammable vapors.

1.18 FIRE PROTECTION AND PREVENTION

Fire protection and prevention procedures shall be included in the SSHP. The procedures shall address the control of ignition sources, monitoring of flammable/combustible gases using a CGI device and purging of the gases from the UST using ventilation or dry ice when the LFL readings are greater than 10 percent. If readings of 20 percent LFL or greater are measured, all operation shall be suspended and the combustible gases purged. Nonsparking and explosion-proof equipment shall be used, whenever possible, in executing the work for this project. If it is necessary to conduct Hot Work, such work shall be conducted only with a HOT Work Permit. Fire extinguishers shall be available on site and provisions of alerting Fire Fighting Squad during Hot Work shall be addressed in the SSHP.
The EZ and CRFZ are non-smoking areas, and people entering the areas shall leave smoking materials such as cigarettes and flame-producing devices at a previously determined location.

1.19 ELECTRICAL SAFETY

Electrical safety procedures shall be implemented and included in the SSHP. Electrical equipment and wiring shall be in accordance with NFPA 70, Class 1, Group D, Division 1. The procedures shall include site specific lockout/tagout method for the various electrical sources that are potentially hazardous to workers on site. The use of GFCI is mandatory for all electrical equipment.

1.20 EXCAVATION AND TRENCH SAFETY

Excavation and trenching work shall be done in accordance with 29 CFR 1926 and EM 385-1-1 and pre-approved as part of the SSHP. During working hours, all excavation pits and trenches shall be barricaded, and during non-working hours, open excavation pits shall be barricaded and fenced, and all open trenches shall be barricaded and fenced. Open trenches more than 4-foot deep shall also be plated.

1.21 GUARDING OF MACHINERY AND EQUIPMENT

Ensure compliance with EM 385-1-1, 29 CFR 1910..303 and 29 CFR 1910.305 for guarding of machinery and equipment. All energized parts of machinery and equipment must be guarded against accidental contact by approved cabinets or enclosures. Ground fault circuit interrupters must be installed on each temporary 15 or 20 ampere, 120-volt ac circuit at locations where construction, demolition or alterations are being

performed. Provide site specific procedures to comply with 29 CFR 1910.269 on maintaining the minimum approach distances between operating mechanical equipment and exposed energized lines.

1.22 LOCKOUT/TAGOUT

Lockout/Tagout in order to control energy sources must be implemented before any workers are permitted to enter a confined space. All energy sources which are potentially hazardous to the workers in the space must be secured, relived, disconnected and/or restrained. Energy sources include: electrical, mechanical, hydraulic, pneumatic, chemical, thermal, and gravity.

1.23 FALL PROTECTION

A written site specific fall protection plan shall be submitted with the SSHP to address potential fall hazards and preventive measures and controls, based on 29 CFR 1926 Subpart M, Fall protection and EM 385-1-1.

It is the responsibility of the SSHO (unless another individual has been designated as a Competent Person for fall protection of the Project) to implement this fall protection program. Implementation will be through continual safety checks of the operations and by enforcing the safety procedures contained in this program and any site-specific plan.

1.24 HAZARD COMMUNICATION

Adhere to all parts of Hazard Communication regulations 29 CFR 1926.1200. Provide the Contracting Officer with HM Inventory and a copy of the material safety Data Sheets (MSDS) for all materials brought to the site.

1.25 SANITATION

In addition to decontamination facilities, washing and toilet facilities shall be maintained outside the decontamination zone. Keep all areas outside the decontamination zone clean and free of waste and debris.

1.26 PROCESS SAFETY MANAGEMENT

Process safety in this project may involve waste minimization such as evaporation of non hazardous wastewater by solar radiation. Maximize process safety management for this project.

1.27 SIGNS AND LABELS

Provide warning signs printed in English, French and Somali and at all approaches to the work site, and the exclusion zone and decontamination zone, in particular. Locate signs at such a distance that personnel and public may read the sign and take the necessary protective steps before entering the area. Provide labels and affix to potential hazardous waste and other contaminated waste.

1.28 WASTE DISPOSAL

Manage and dispose of waste in accordance with Section 01 50 00 TEMPORARY CONSTRUCTION FACILITIES AND CONTROLS.

1.29 SITE CONTROL MEASURES

1.29.1 Work Zones

Initial anticipated work zone boundaries (exclusion zone, contamination reduction zone, support zone, all access points and decontamination areas) are to be clearly delineated on the site drawings. Base delineation of work zone boundaries on the contamination characterization data and the hazard/risk analysis to be performed as described in paragraph: HAZARD/RISK ANALYSIS. As work progresses and field conditions are monitored, work zone boundaries may be modified (and site drawings modified) with approval of the Contracting Officer. Clearly identify work zones and marked in the field (using fences, tape, signs, etc.). Submit and post a site map, showing work zone boundaries and locations of decontamination facilities in the onsite office. Work zones must consist of the following:

1.29.1.1 Exclusion Zone (EZ)

The exclusion zone is the area where hazardous contamination is either known or expected to occur and the greatest potential for exposure exists. Control entry into this area and exit may only be made through the CRZ.

1.29.1.2 Contamination Reduction Zone (CRZ)

The CRZ is the transition area between the Exclusion Zone and the Support Zone. The personnel and equipment decontamination areas must be separate and unique areas located in the CRZ.

1.29.1.3 Support Zone (SZ)

The Support Zone is defined as areas of the site, other than exclusion zones and contamination reduction zones, where workers do not have the potential to be exposed to hazardous substances or dangerous conditions resulting from hazardous waste operations. Secure the Support Zone against active or passive contamination. Site offices, parking areas, and other support facilities must be located in the Support Zone.

1.29.2 Site Control Log

A log of personnel visiting, entering, or working on the site must be maintained. Include the following: date, name, agency or company, time entering and exiting site, time entering and exiting the exclusion zone (if applicable). Before visitors are allowed to enter the Contamination Reduction Zone or Exclusion Zone, they must show proof of current training, medical surveillance and respirator fit testing (if respirators are required for the tasks to be performed) and fill out a Certificate of Worker or Visitor Acknowledgment. Record this visitor information, including date, in the log.

1.29.3 Communication

Provide and install an employee alarm system that has adequate means of on and off site communication in accordance with 29 CFR 1910 Section .165. The means of communication must be able to be perceived above ambient noise or light levels by employees in the affected portions of the workplace. The signals must be distinctive and recognizable as messages to evacuate or to perform critical operations.

1.29.4 Site Security

Print signs in bold large letters on contrasting backgrounds. Signs must be visible from all points where entry might occur and at such distances from the restricted area that employees may read the signs and take necessary protective steps before entering.

1.30 PERSONAL HYGIENE AND DECONTAMINATION

Personnel entering the Exclusion or Contamination Reduction Zones or otherwise exposed to hazardous chemical vapors, gases, liquids, or contaminated solids must decontaminate themselves and their equipment prior to exiting the contamination reduction zone (CRZ) and entering the support zone. Consult Chapter 10.0 of NIOSH 85-115 when preparing decontamination procedures. Submit a detailed discussion of personal hygiene and decontamination facilities and procedures to be followed by site workers as part of the APP/SSHP. Train employees in the procedures and enforce the procedures throughout site operations.

1.30.1 Decontamination Facilities

Submit drawings showing the layout of the personnel and equipment decontamination facilities.

1.30.2 Personnel Decontamination

Initially set up a decontamination line in the CRZ. Employees must exit the exclusion zone through the CRZ and implement the following decontamination procedures and techniques: remove all outer garments, hand and face wash . Showers, if needed, must comply with 29 CFR 1910, Section.141 and EM 385-1-1, 02 C, Washing Facilities. It is the Site Safety and Health Officer's responsibility to recommend techniques to improve personnel decontamination procedures, if necessary.

1.30.3 Equipment Decontamination

Decontaminate the vehicles and equipment used in the EZ shall be decontaminated in the CRZ prior to leaving the site.

1.30.3.1 Facilities for Equipment and Personnel

Provide a vehicle/equipment decontamination station within the CRZ for decontaminating vehicles and equipment leaving the EZ. High pressure, low volume, water wash area for equipment and vehicles. A steam cleaning system for use after the mud and/or site material has been cleaned from the equipment. Dry decontamination using a broom to remove dry/loose spilled materials on accessible surfaces. A designated "clean area" in the CRZ for performing equipment maintenance. Use this area when personnel are required by normal practices to come in contact with the ground, i.e., crawling under a vehicle to change engine oil. Equipment within the EZ or CRZ must be decontaminated before maintenance is performed.

1.30.3.2 Procedures

Procedures for equipment decontamination must be developed and utilized to prevent the spread of contamination into the SZ and offsite areas. These procedures must address disposal of contaminated products and spent materials used on the site, including containers, fluids, oils, etc.

Assume any item taken into the EZ to be contaminated and perform an inspection and decontaminate. Vehicles, equipment, and materials must be cleaned and decontaminated prior to leaving the site. Handle construction material in such a way as to minimize the potential for contaminants being spread and/or carried offsite. Prior to exiting the site, vehicles and equipment must be monitored to ensure the adequacy of decontamination.

1.31 EMERGENCY EQUIPMENT AND FIRST AID REQUIREMENTS

Maintain, as a minimum, the following items onsite and available for immediate use:

a. First aid equipment and supplies approved by the consulting physician.

b. Emergency eyewashes and showers that comply with ANSI/ISEA Z358.1.

c. Emergency-use respirators. For escape purposes, supply 5- to 15-minute emergency escape masks. For rescue purposes, Supply 2 positive pressure self-contained breathing apparatus (SCBA). Dedicate these for emergency use only and maintained onsite in the Contamination Reduction Zone.

d. Provide fire extinguishers of sufficient size and type at site facilities and in all vehicles and at any other site locations where flammable or combustible materials present a fire risk.

1.32 EMERGENCY RESPONSE AND CONTINGENCY PROCEDURES

An Emergency Response Plan, that meets the requirements of 29 CFR 1910.120 (l) and 29 CFR 1926.65 (l), must be developed and implemented as a section of the APP/SSHP. In the event of any emergency associated with remedial action, without delay, alert all onsite employees and as necessary offsite emergency responders that there is an emergency situation; take action to remove or otherwise minimize the cause of the emergency; alert the Contracting Officer; and institute measures necessary to prevent repetition of the conditions or actions leading to, or resulting in, the emergency. Train employees that are required to respond to hazardous emergency situations to their level of responsibility according to 29 CFR 1910.120 (q) and 29 CFR 1926.65 (q) requirements. Rehearse the plan regularly as part of the overall training program for site operations. Review the plan periodically and revised as necessary to reflect new or changing site conditions or information. Provide copies of the Emergency Response Portion of the accepted APP/SSHP to the affected local emergency response agencies. Address, as a minimum, the following elements in the plan:

a. Pre-emergency planning. Coordinate with local emergency response providers during preparation of the Emergency Response Plan. At a minimum, coordinate with local fire, rescue, hazardous materials response teams, police and emergency medical providers to assure all organizations are capable and willing to respond to and provide services for on-site emergencies. Ensure the Emergency Response Plan for the site is compatible and integrated with the local fire, rescue, medical and police security services available from local emergency response planning agencies.

b. Personnel roles, lines of authority, communications for emergencies.

c. Emergency recognition and prevention.

d. Site topography, layout, and prevailing weather conditions.

e. Criteria and procedures for site evacuation (emergency alerting procedures, employee alarm system, emergency PPE and equipment, safe distances, places of refuge, evacuation routes, site security and control).

f. Specific procedures for decontamination and medical treatment of injured personnel.

g. Route maps to nearest prenotified medical facility. Site-support vehicles must be equipped with maps. At the beginning of project operations, drivers of the support vehicles must become familiar with the emergency route and the travel time required.

h. Emergency alerting and response procedures including posted instructions and a list of names and telephone numbers of emergency contacts (physician, nearby medical facility, fire and police departments, ambulance service, Federal, state, and local environmental agencies; as well as Safety and Health Manager, the Site Superintendent, the Contracting Officer and/or their alternates).

i. Criteria for initiating community alert program, contacts, and responsibilities.

j. Procedures for reporting incidents to appropriate government agencies. In the event that an incident such as an explosion or fire, or a spill or release of toxic materials occurs during the course of the project, the appropriate government agencies must be immediately notified. In addition, verbally notify the Contracting Officer and the local district safety office immediately and receive a written notification within 24 hours. Include within the report the following items:

(1) Name, organization, telephone number, and location of the Contractor.

(2) Name and title of the person(s) reporting.

(3) Date and time of the incident.

(4) Location of the incident, i.e., site location, facility name.

(5) Brief summary of the incident giving pertinent details including type of operation ongoing at the time of the incident.

(6) Cause of the incident, if known.

(7) Casualties (fatalities, disabling injuries).

(8) Details of any existing chemical hazard or contamination.

(9) Estimated property damage, if applicable.

(10) Nature of damage, effect on contract schedule.

(11) Action taken to ensure safety and security.

(12) Other damage or injuries sustained, public or private.

k. Procedures for critique of emergency responses and follow-up.

1.33 CERTIFICATE OF WORKER/VISITOR ACKNOWLEDGEMENT

A copy of a Contractor-generated certificate of worker/visitor acknowledgement must be completed and submitted for each visitor allowed to enter contamination reduction or exclusion zones, and for each employee, following the Example Certificate Of Worker/Visitor Acknowledgement at the end of this section.

1.34 INSPECTIONS

Attach to and submit with the Daily Quality Control reports the SSHO's Daily Inspection Logs. Include with each entry the following: date, work area checked, employees present in work area, PPE and work equipment being used in each area, special safety and health issues and notes, and signature of preparer.

1.35 SAFETY AND HEALTH PHASE-OUT REPORT

Submit a Safety and Health Phase-Out Report in conjunction with the project close out report and will be received prior to final acceptance of the work. Include the following minimum information :

a. Summary of the overall performance of safety and health (accidents or incidents including near misses, unusual events, lessons learned, etc.).

b. Final decontamination documentation including procedures and techniques used to decontaminate equipment, vehicles, and on site facilities.

c. Summary of exposure monitoring and air sampling accomplished during the project.

d. Signatures of Safety and Health Manager and SSHO.

PART 2 PRODUCTS

Not Used

PART 3 EXECUTION

Not Used

-- End of Section --

THIS PAGE HAS BEEN INTENTIONALLY LEFT BLANK

SECTION 01 42 00

SOURCES FOR REFERENCE PUBLICATIONS
11/14

PART 1 GENERAL

1.1 REFERENCES

Various publications are referenced in other sections of the specifications to establish requirements for the work. These references are identified in each section by document number, date and title. The document number used in the citation is the number assigned by the standards producing organization (e.g. ASTM B564 Standard Specification for Nickel Alloy Forgings). However, when the standards producing organization has not assigned a number to a document, an identifying number has been assigned for reference purposes.

1.2 ORDERING INFORMATION

The addresses of the standards publishing organizations whose documents are referenced in other sections of these specifications are listed below, and if the source of the publications is different from the address of the sponsoring organization, that information is also provided. Documents listed in the specifications with numbers which were not assigned by the standards producing organization should be ordered from the source by title rather than by number.

ACOUSTICAL SOCIETY OF AMERICA (ASA)
1305 Walt Whitman Road, Suite 300
Melville, NY 11747-4300
Ph: 516-576-2360
Fax: 631-923-2875
E-mail: asa@aip.org
Internet: http://asa.aip.org

AIR MOVEMENT AND CONTROL ASSOCIATION INTERNATIONAL (AMCA)
30 West University Drive
Arlington Heights, IL 60004-1893
Ph: 847-394-0150
Fax: 847-253-0088
E-mail: amca@amca.org
Internet: http://www.amca.org

AIR-CONDITIONING, HEATING AND REFRIGERATION INSTITUTE (AHRI)
2111 Wilson Blvd, Suite 500
Arlington, VA 22201
Ph: 703-524-8800
Fax: 703-562-1942
Internet: http://www.ahrinet.org

ALUMINUM ASSOCIATION (AA)
National Headquarters
1525 Wilson Boulevard, Suite 600
Arlington, VA 22209
Ph: 703-358-2960
E-Mail: info@aluminum.org

Internet: http://www.aluminum.org

AMERICAN ARCHITECTURAL MANUFACTURERS ASSOCIATION (AAMA)
1827 Walden Office Square, Suite 550
Schaumburg, IL 60173-4268
Ph: 847-303-5664
Fax: 847-303-5774
E-mail: customerservice@aamanet.org
Internet: http://www.aamanet.org

AMERICAN ASSOCIATION OF STATE HIGHWAY AND TRANSPORTATION OFFICIALS (AASHTO)
444 North Capital Street, NW, Suite 249
Washington, DC 20001
Ph: 202-624-5800
Fax: 202-624-5806
E-Mail: info@aashto.org
Internet: http://www.aashto.org

AMERICAN CONCRETE INSTITUTE INTERNATIONAL (ACI)
38800 Country Club Drive
Farmington Hills, MI 48331-3439
Ph: 248-848-3700
Fax: 248-848-3701
E-mail: bkstore@concrete.org
Internet: http://www.concrete.org

AMERICAN CONFERENCE OF GOVERNMENTAL INDUSTRIAL HYGIENISTS (ACGIH)
1330 Kemper Meadow Drive
Cincinnati, OH 45240
Ph: 513-742-2020 or 513-742-6163
Fax: 513-742-3355
E-mail: mail@acgih.org
Internet: http://www.acgih.org

AMERICAN HARDBOARD ASSOCIATION (AHA)
1210 West Northwest Highway
Palatine, IL 60067
Ph: 847-934-8800
Fax: 847-934-8803
E-mail: aha@hardboard.org
Internet: http://domensino.com/AHA/

AMERICAN INSTITUTE OF STEEL CONSTRUCTION (AISC)
One East Wacker Drive, Suite 700
Chicago, IL 60601-1802
Ph: 312-670-2400
Fax: 312-670-5403
Bookstore: 800-644-2400
E-mail: aisc@ware-pak.com
Internet: http://www.aisc.org

AMERICAN IRON AND STEEL INSTITUTE (AISI)
25 Massachusetts Avenue, NW Suite 800
Washington, DC 20001
Ph: 202-452-7100
Internet: http://www.steel.org

AMERICAN NATIONAL STANDARDS INSTITUTE (ANSI)
1899 L Street, NW,11th Floor
Washington, DC 20036
Ph: 202-293-8020
Fax: 202-293-9287
E-mail: storemanager@ansi.org
Internet: http://www.ansi.org/

AMERICAN PETROLEUM INSTITUTE (API)
Internet: http://www.api.org

AMERICAN SOCIETY FOR NONDESTRUCTIVE TESTING (ASNT)
P.O. Box 28518
1711 Arlingate Lane
Columbus, OH 43228-0518
Ph: 800-222-2768; 614-274-6003
Fax: 614-274-6899
E-mail: tjones@asnt.org
Internet: http://www.asnt.org

AMERICAN SOCIETY OF CIVIL ENGINEERS (ASCE)
1801 Alexander Bell Drive
Reston, VA 20191
Ph: 703-295-6300; 800-548-2723
E-mail: member@asce.org
Internet: http://www.asce.org

AMERICAN SOCIETY OF HEATING, REFRIGERATING AND AIR-CONDITIONING ENGINEERS (ASHRAE)
1791 Tullie Circle, NE
Atlanta, GA 30329
Ph: 800-527-4723 or 404-636-8400
Fax: 404-321-5478
E-mail: ashrae@ashrae.org
Internet: http://www.ashrae.org

AMERICAN SOCIETY OF SAFETY ENGINEERS (ASSE/SAFE)
1800 East Oakton Street
Des Plaines, IL 60018
Ph: 847-699-2929
Internet: http://www.asse.org

AMERICAN SOCIETY OF SANITARY ENGINEERING (ASSE)
18927 Hickory Creek Drive, Suite 220
Mokena, IL 60448
Ph: 708-995-3019
Fax: 708-479-6139
E-mail: staffengineer@asse-plumbing.org
Internet: http://www.asse-plumbing.org

AMERICAN WATER WORKS ASSOCIATION (AWWA)
6666 West Quincy Avenue
Denver, CO 80235-3098
Ph: 303-794-7711
E-mail: distribution@awwa.org
Internet: http://www.awwa.org

AMERICAN WELDING SOCIETY (AWS)
13301 NW 47 Ave

Miami, FL 33054

Ph: 888-WELDING, 305-824-1177, 305-826-6192
Fax: 305-826-6195
E-mail: customer.service@awspubs.com
Internet: http://www.aws.org

AMERICAN WOOD PROTECTION ASSOCIATION (AWPA)
P.O. Box 361784
Birmingham, AL 35236-1784
Ph: 205-733-4077
Fax: 205-733-4075
Internet: http://www.awpa.com

ARCHITECTURAL WOODWORK INSTITUTE (AWI)
46179 Westlake Drive, Suite 120
Potomac Falls, VA 20165
Ph: 571-323-3636
Fax: 571-323-3630
E-mail: info@awinet.org
Internet: http://www.awinet.org

ASME INTERNATIONAL (ASME)
Two Park Avenue, M/S 10E
New York, NY 10016-5990
Ph: 800-843-2763
Fax: 973-882-1717
E-mail: customercare@asme.org
Internet: http://www.asme.org

ASSOCIATED AIR BALANCE COUNCIL (AABC)
1518 K Street, NW
Washington, DC 20005
Ph: 202-737-0202
Fax: 202-638-4833
E-mail: info@aabc.com
Internet: http://www.aabc.com/

ASSOCIATION OF EDISON ILLUMINATING COMPANIES (AEIC)
600 North 18th Street
P.O. Box 2641
Birmingham, AL 35291-0992
Ph: 205-257-3839
E-Mail: aeicdir@bellsouth.net
Internet: http://www.aeic.org

ASTM INTERNATIONAL (ASTM)
100 Barr Harbor Drive, P.O. Box C700
West Conshohocken, PA 19428-2959
Ph: 877-909-2786
Internet: http://www.astm.org

BAY AREA AIR QUALITY MANAGEMENT DISTRICT (Bay Area AQMD)
939 Ellis Street
San Francisco, CA 94109
Ph: 415-771-6000
Fax: 415-928-8560
E-Mail: publicrecords@baaqmd.gov
Internet: http://www.baaqmd.gov/

BUILDERS HARDWARE MANUFACTURERS ASSOCIATION (BHMA)
355 Lexington Avenue, 15th Floor
New York, NY 10017
Ph: 212-297-2122
Fax: 212-370-9047
Internet: http://www.buildershardware.com

CAST IRON SOIL PIPE INSTITUTE (CISPI)
3008 Preston Station Drive
Hixson, TN 37343
Ph: 423-842-2122
Internet: http://www.cispi.org

COMPOSITE PANEL ASSOCIATION (CPA)
19465 Deerfield Avenue, Suite 306
Leesburg, VA 20176
Ph: 703-724-1128
Fax: 703-724-1588
Internet: http://www.compositepanel.org/

CONCRETE REINFORCING STEEL INSTITUTE (CRSI)
933 North Plum Grove Road
Schaumburg, IL 60173-4758
Ph: 847-517-1200
Fax: 847-517-1206
Internet: http://www.crsi.org/

COPPER DEVELOPMENT ASSOCIATION (CDA)
Internet: http://www.copper.org

CSA GROUP (CSA)
178 Rexdale Blvd.
Toronto, ON, Canada M9W 1R3
Ph: 416-747-4044
Fax: 416-747-2510
E-mail: sales@csagroup.org
Internet: http://www.csagroup.org/us/en/home

ELECTRONIC COMPONENTS INDUSTRY ASSOCIATION (ECIA)
2214 Rock Hill Rd., Suite 170
Herndon, VA 20170
Ph: 571-323-0294
Fax: 571-323-0245
E-mail: emikoski@ecaus.org
Internet: http://www.ecianow.org/

ENERGY INSTITUTE (EI)
Publications Team
Energy Institute
61 New Cavendish Street
London
W1G 7AR, UK
Ph: +44 (0)20 7467 7100
Fax: +44 (0)20 7255 1472
E-mail: pubs@energyinst.org.uk
Internet:
http://www.energyinstpubs.org.uk/cgi-bin/open.cgi?page=index

FM GLOBAL (FM)
270 Central Avenue
P.O. Box 7500
Johnston, RI 02919-4923
Ph: 877-364-6726
Fax: 401-275-3029
E-mail: servicedesk.myrisk@fmglobal.com
Internet: http://www.fmglobal.com

FOUNDATION FOR CROSS-CONNECTION CONTROL AND HYDRAULIC RESEARCH (FCCCHR)
University of South California
Research Annex 219
3716 South Hope Street
Los Angeles, CA 90089-7700
Ph: 213-740-2032 or 866-545-6340
Fax: 213-740-8399
E-mail: fccchr@usc.edu
Internet: http://www.usc.edu/dept/fccchr

GEOSYNTHETIC INSTITUTE (GSI)
475 Kedron Avenue
Folsom, PA 19033-1208
Ph: 610-522-8440
Fax: 610-522-8441
Internet: http://www.geosynthetic-institute.org

GLASS ASSOCIATION OF NORTH AMERICA (GANA)
800 SW Jackson St., Suite 1500
Topeka, KS 66612-1200
Ph: 785-271-0208
E-mail: gana@glasswebsite.com
Internet: http://www.glasswebsite.com

GREEN SEAL (GS)
1001 Connecticut Avenue, NW
Suite 827
Washington, DC 20036-5525
Ph: 202-872-6400
Fax: 202-872-4324
Internet: http://www.greenseal.org

GYPSUM ASSOCIATION (GA)
6525 Belcrest Road, Suite 480
Hyattsville, MD 20782
Ph: 301-277-8686
Fax: 301-277-8747
E-mail: info@gypsum.org
Internet: http://www.gypsum.org

ILLUMINATING ENGINEERING SOCIETY (IES)
120 Wall Street, 17th Floor
New York, NY 10005-4001
Ph: 212-248-5000
Fax: 212-248-5018
E-mail: IES@IES.org
Internet: http://www.IES.org

INSTITUTE OF ELECTRICAL AND ELECTRONICS ENGINEERS (IEEE)
445 and 501 Hoes Lane
Piscataway, NJ 08854-4141
Ph: 732-981-0060 or 800-701-4333
Fax: 732-562-9667
E-mail: onlinesupport@ieee.org
Internet: http://www.ieee.org

INSULATED CABLE ENGINEERS ASSOCIATION (ICEA)
P.O. Box 1568
Carrollton, GA 30112
E-mail:
http://www.icea.net/Public_Pages/Contact/Email_Contact.html
Internet: http://www.icea.net

INSULATING GLASS MANUFACTURERS ALLIANCE (IGMA)
27 N. Wacker Dr. Suite 365
Chicago, IL 60606-2800
Ph: 613-233-1510
Fax: 613-482-9436
E-mail: enquiries@igmaonline.org
Internet: http://www.igmaonline.org

INTERNATIONAL CODE COUNCIL (ICC)
500 New Jersey Avenue, NW
6th Floor, Washington, DC 20001
Ph: 800-786-4452 or 888-422-7233
E-mail: order@iccsafe.org
Internet: www.iccsafe.org

INTERNATIONAL CONCRETE REPAIR INSTITUTE (ICRI)
10600 West Higgins Road, Suite 607
Rosemont, IL 60018
Ph: 847-827-0830
Fax: 847-827-0832
Internet: http://www.icri.org

INTERNATIONAL ELECTRICAL TESTING ASSOCIATION (NETA)
3050 Old Centre Ave. Suite 102
Portage, MI 49024
Ph: 269-488-6382
Internet: http://www.netaworld.org

INTERNATIONAL ELECTROTECHNICAL COMMISSION (IEC)
3, rue de Varembe
P.O. Box 131
CH-1211 Geneva 20, Switzerland
Ph: 41-22-919-02-11
Fax: 41-22-919-03-00
Internet: http://www.iec.ch

INTERNATIONAL ORGANIZATION FOR STANDARDIZATION (ISO)
1, ch. de la Voie-Creuse
Case Postale 56
CP 56 - CH-1211 Geneva 20
Switzerland
Ph: 41-22-749-01-11
Fax: 41-22-733-34-30
E-mail: central@iso.ch

Internet: http://www.iso.org

INTERNATIONAL SAFETY EQUIPMENT ASSOCIATION (ISEA)
1901 North Moore Street
Arlington, VA 22209-1762
Ph: 703-525-1695
Fax: 703-528-2148
Internet: http://www.safetyequipment.org/

KITCHEN CABINET MANUFACTURERS ASSOCIATION (KCMA)
1899 Preston White Drive
Reston, VA 20191-5435
Ph: 703-264-1690
Fax: 703-620-6530
Internet: http://www.kcma.org

MANUFACTURERS STANDARDIZATION SOCIETY OF THE VALVE AND FITTINGS INDUSTRY (MSS)
127 Park Street, NE
Vienna, VA 22180-4602
Ph: 703-281-6613
E-mail: info@mss-hq.com
Internet: http://mss-hq.org/Store/index.cfm

MASTER PAINTERS INSTITUTE (MPI)
2800 Ingleton Avenue
Burnaby, BC CANADA V5C 6G7
Ph: 1-888-674-8937
Fax: 1-888-211-8708
E-mail: info@paintinfo.com or techservices@mpi.net
Internet: http://www.mpi.net/

METAL BUILDING MANUFACTURERS ASSOCIATION (MBMA)
1300 Sumner Avenue
Cleveland, OH 44115-2851
Ph: 216-241-7333
Fax: 216-241-0105
E-mail: mbma@mbma.com
Internet: http://www.mbma.com

MIDWEST INSULATION CONTRACTORS ASSOCIATION (MICA)
16712 Elm Circle
Omaha, NE 68130
Ph: 800-747-6422
Fax: 402-330-9702
Internet: http://www.micainsulation.org

NACE INTERNATIONAL (NACE)
Houston, TX 77084-4906
Ph: 281-228-6223
Fax: 281-228-6300
E-mail: firstservice@nace.org
Internet: http://www.nace.org

NATIONAL AERONAUTICS AND SPACE ADMINISTRATION (NASA)

Superintendent of Documents at
U.S. Government Printing Office
732 North Capitol Street, NW

Washington, DC 20401-0001
Ph: 202-783-3238
Fax: 202-512-1800
E-mail: ContactCenter@gpo.gov
Internet: http://www.nasa.gov or http://www.gpoaccess.gov

NATIONAL ASSOCIATION OF ARCHITECTURAL METAL MANUFACTURERS (NAAMM)
800 Roosevelt Road, Bldg C, Suite 312
Glen Ellyn, IL 60137
Ph: 630-942-6591
Fax: 630-790-3095
E-mail: wlewis7@cox.net(Wes Lewis,technical consultant)
Internet: http://www.naamm.org

NATIONAL ELECTRICAL CONTRACTORS ASSOCIATION (NECA)
3 Bethesda Metro Center, Suite 1100
Bethesda, MD 20814
Ph: 301-657-3110
Fax: 301-215-4500
Internet: http://www.necanet.org/

NATIONAL ELECTRICAL MANUFACTURERS ASSOCIATION (NEMA)
1300 North 17th Street, Suite 900
Arlington, VA 22209
Ph: 703-841-3200
Internet: http://www.nema.org/

NATIONAL ENVIRONMENTAL BALANCING BUREAU (NEBB)
8575 Grovemont Circle
Gaithersburg, MD 20877
Ph: 301-977-3698
Fax: 301-977-9589
Internet: http://www.nebb.org

NATIONAL FENESTRATION RATING COUNCIL (NFRC)
6305 Ivy Lane, Suite 140
Greenbelt, MD 20770
Ph: 301-589-1776
Fax: 301-589-3884
E-Mail: info@nfrc.org
Internet: http://www.nfrc.org

NATIONAL FIRE PROTECTION ASSOCIATION (NFPA)
1 Batterymarch Park
Quincy, MA 02169-7471
Ph: 617-770-3000
Fax: 617-770-0700
Internet: http://www.nfpa.org

NATIONAL INSTITUTE FOR OCCUPATIONAL SAFETY AND HEALTH (NIOSH)
395 E Street, S.W.
Suite 9200
Patriots Plaza Building
Washington, DC 20201
Ph: 800-232-4636
Fax: 513-533-8347
E-mail: nioshdocket@cdc.gov
Internet: http://www.cdc.gov/niosh/

NATIONAL INSTITUTE OF STANDARDS AND TECHNOLOGY (NIST)
100 Bureau Drive
Stop 1070
Gaithersburg, MD 20899-1070
Ph: 301-975-NIST (6478)
E-mail: inquiries@nist.gov
Internet: http://www.nist.gov

NATIONAL ROOFING CONTRACTORS ASSOCIATION (NRCA)
10255 West Higgins Road, Suite 600
Rosemont, IL 60018-5607
Ph: 866-275-6722 (866-ASK-NRCA)
Fax: 847-299-1183
E-mail: info@nrca.net
Internet: http://www.nrca.net

NSF INTERNATIONAL (NSF)
789 North Dixboro Road
P.O. Box 130140
Ann Arbor, MI 48105
Ph: 734-769-8010 or 800-NSF-MARK
Fax: 734-769-0109
E-mail: info@nsf.org
Internet: http://www.nsf.org

ORGANISATION FOR ECONOMIC CO-OPERATION AND DEVELOPMENT (OECD)
2, rue Andre Pascal
75775 Paris Cedex 16, France
Ph: + 33 1 45 24 82 00
Fax: 33 1 45 24 85 00
Internet: http://www.oecd.org
U.S. Contact Center
OECD Washington Center
2001 L Street, NW, Suite 650
Washington, DC 20036-4922
Ph: 202-785-6323
Fax: 202-785-0350
E-mail: washington.contact@oecd.org

PLASTIC PIPE AND FITTINGS ASSOCIATION (PPFA)
800 Roosevelt Road
Building C, Suite 312
Glen Ellyn, IL 60137
Ph: 630-858-6540
Fax: 630-790-3095
Internet: http://www.ppfahome.org

SCIENTIFIC CERTIFICATION SYSTEMS (SCS)
2000 Powell Street, Suite 600
Emeryville, CA 94608
Ph: 800-326-3228
E-mail: info@SCSglobal services.com
Internet: http://www.scsglobalservices.com/

SHEET METAL AND AIR CONDITIONING CONTRACTORS' NATIONAL ASSOCIATION (SMACNA)
4201 Lafayette Center Drive
Chantilly, VA 20151-1219
Ph: 703-803-2980

Fax: 703-803-3732
Internet: http://www.smacna.org

SOCIETY FOR PROTECTIVE COATINGS (SSPC)
40 24th Street, 6th Floor
Pittsburgh, PA 15222
Ph: 412-281-2331
Fax: 412-281-9992
E-mail: info@sspc.org
Internet: http://www.sspc.org

SOCIETY OF AUTOMOTIVE ENGINEERS INTERNATIONAL (SAE)
400 Commonwealth Drive
Warrendale, PA 15096
Ph: 724-776-4970
Fax: 877-606-7323
E-mail: customerservice@sae.org
Internet: http://www.sae.org

SOCIETY OF CABLE TELECOMMUNICATIONS ENGINEERS (SCTE)
140 Philips Road
Exton, PA 19341-1318
Ph: 800-542-5040 or 610-363-6888
Fax: 610-363-5898
E-Mail: information@scte.org
http://www.scte.org

SOLAR RATING AND CERTIFICATION CORPORATION (SRCC)
400High Point Drive, Suite 400
Cocoa, FL 32926
Ph: 321-213-6037
Fax: 321-821-0910
E-mail: srcc@solar-rating.org
Internet: http://www.solar-rating.org

SOUTH COAST AIR QUALITY MANAGEMENT DISTRICT (SCAQMD)
21865 Copley Drive
Diamond Bar, CA 91765
Ph: 909-396-2000
E-mail: webinquiry@aqmd.gov
Internet: http://www.aqmd.gov

STEEL DECK INSTITUTE (SDI)
P.O. Box 426
Glenshaw, PA 15116
Ph: 412.487.3325
Fax: 412.487.3326
E-mail: bob@sdi.org
Internet: http://www.sdi.org

STEEL DOOR INSTITUTE (SDI/DOOR)
30200 Detroit Road
Westlake, OH 44145
Ph: 440-899-0010
Fax: 440-892-1404
E-mail: info@steeldoor.org
Internet: http://www.steeldoor.org

STEEL JOIST INSTITUTE (SJI)
234 W. Cheves Street
Florence, SC 29501
Ph: 843-407-4091
Internet: http://www.steeljoist.org

STEEL TANK INSTITUTE (STI)
944 Donata Ct.
Lake Zurich, IL 60047
Ph: 847-438-8265
Fax: 847-438-8766
Internet: http://www.steeltank.com

TECHNICAL ASSOCIATION OF THE PULP AND PAPER INDUSTRY (TAPPI)
15 Technology Parkway South, Suite 115
Peachtree Corners, GA 30092
Ph: 800-322-8686 or 770-446-1400
Fax: 770-446-6947
E-mail: memberconnection@tappi.org
Internet: http://www.tappi.org

TELECOMMUNICATIONS INDUSTRY ASSOCIATION (TIA)
1320 N. Courthouse Rd., Suite 200
Arlington, VA 22201
Ph: 703-907-7700
Fax: 703-907-7727
Internet: http://www.tiaonline.org

TILE COUNCIL OF NORTH AMERICA (TCNA)
100 Clemson Research Boulevard
Anderson, SC 29625
Ph: 864-646-8453
Fax: 864-646-2821
E-mail: info@tileusa.com
Internet: http://www.tcnatile.com/

U.S. ARMY CORPS OF ENGINEERS (USACE)
CRD-C DOCUMENTS available on Internet:
http://www.wbdg.org/ccb/browse_cat.php?c=68
Order Other Documents from:
USACE Publications Depot
Attn: CEHEC-IM-PD
2803 52nd Avenue
Hyattsville, MD 20781-1102
Ph: 301-394-0081
Fax: 301-394-0084
E-mail: pubs-army@usace.army.mil
Internet: http://www.publications.usace.army.mil/
or
http://www.hnc.usace.army.mil/Missions/Engineering/TECHINFO.aspx

U.S. DEFENSE LOGISTICS AGENCY (DLA)

Fort Belvoir, VA

Internet: http://www.dla.mil

U.S. DEPARTMENT OF AGRICULTURE (USDA)
Order AMS Publications from:

AGRICULTURAL MARKETING SERVICE (AMS)
Seed Regulatory and Testing Branch
801 Summit Crossing Place, Suite C
Gastonia, NC 28054-2193
Ph: 704-810-8871
Fax: 704-852-4189
E-mail: seed.ams@usda.gov
Internet: http://www.ams.usda.gov/lsg/seed.htm
Order Other Publications from:
U.S. Department of Agriculture, Rural Utilities Program
USDA Rural Development, Room 4051-S
Mail Stop 1510
1400 Independence Avenue SW
Washington, DC 20250-1510
Phone: (202) 720-9540
TTY: (800) 877-8339 (Federal Relay Service)
Fax: (202) 720-1725
Internet: http://www.rurdev.usda.gov/utilities_lp.html

U.S. DEPARTMENT OF DEFENSE (DOD)
Order DOD Documents from:
Room 3A750-The Pentagon
1400 Defense Pentagon
Washington, DC 20301-1400
Ph: 703-571-3343
FAX: 215-697-1462
E-mail: customerservice@ntis.gov
Internet: http://www.ntis.gov
Obtain Military Specifications, Standards and Related Publications from:
Acquisition Streamlining and Standardization Information System (ASSIST)
Department of Defense Single Stock Point (DODSSP)
Document Automation and Production Service (DAPS)
Building 4/D
700 Robbins Avenue
Philadelphia, PA 19111-5094
Ph: 215-697-6396 - for account/password issues
Internet: http://assist.daps.dla.mil/online/start/; account registration required
Obtain Unified Facilities Criteria (UFC) from:
Whole Building Design Guide (WBDG)
National Institute of Building Sciences (NIBS)
1090 Vermont Avenue NW, Suite 700
Washington, CD 20005
Ph: 202-289-7800
Fax: 202-289-1092
Internet: http://www.wbdg.org/references/docs_refs.php

U.S. DEPARTMENT OF ENERGY (DOE)
1000 Independence Avenue Southwest
Washington, D.C. 20585
Internet: www.eere.energy.gov

U.S. ENVIRONMENTAL PROTECTION AGENCY (EPA)
Ariel Rios Building
1200 Pennsylvania Avenue, N.W.
Washington, DC 20004
Ph: 202-272-0167

Internet: http://www2.epa.gov/libraries
--- Some EPA documents are available only from:
National Technical Information Service (NTIS)
5301 Shawnee Road
Alexandria, VA 22312
Ph: 703-605-6050 or 1-688-584-8332
Fax: 703-605-6900
E-mail: info@ntis.gov
Internet: http://www.ntis.gov

U.S. FEDERAL AVIATION ADMINISTRATION (FAA)
Order for sale documents from:
Superintendent of Documents
U.S. Government Printing Office (GPO)
710 North Capitol Street, NW
Washington, DC 20401
Ph: 202-512-1800
Fax: 202-512-2104
E-mail: contactcenter@gpo.gov
Internet: http://www.gpoaccess.gov
Order free documents from:
Federal Aviation Administration
Department of Transportation
800 Independence Avenue, SW
Washington, DC 20591
Ph: 1-866-835-5322
Internet: http://www.faa.gov

U.S. FEDERAL COMMUNICATIONS COMMISSION (FCC)
445 12th Street SW
Washington, DC 20554
Ph: 888-225-5322
TTY: 888-835-5322
Fax: 866-418-0232
Internet: http://www.fcc.gov
Order Publications From:
Superintendent of Documents
U.S. Government Printing Office (GPO)
710 North Capitol Street, NW
Washington, DC 20401-0001
Ph: 202-512-1800
Fax: 866-418-0232
E-mail: gpoweb@gpo.gov
Internet: http://www.gpoaccess.gov/

U.S. GENERAL SERVICES ADMINISTRATION (GSA)
General Services Administration
1275 First St. NE
Washington, DC 20417
Ph: 202-501-1231
Internet: http://www.gsaelibrary.gsa.gov/ElibMain/home.do
Obtain documents from:
Acquisition Streamlining and Standardization Information System (ASSIST)
Internet: https://assist.dla.mil/online/start/; account registration required

U. S. GREEN BUILDING COUNCIL (USGBC)
2101 L St NW, Suite 500

Washington, D.C. 20037
Ph: 800-795-1747
Internet: http://www.usgbc.org

U.S. NATIONAL ARCHIVES AND RECORDS ADMINISTRATION (NARA)
8601 Adelphi Road
College Park, MD 20740-6001
Ph: 866-272-6272
Fax: 301-837-0483
Internet: http://www.archives.gov
Order documents from:
Superintendent of Documents
U.S.Government Printing Office (GPO)
710 North Capitol Street, NW
Washington, DC 20401
Ph: 202-512-1800
Fax: 202-512-2104
E-mail: contactcenter@gpo.gov
Internet: http://www.gpoaccess.gov

U.S. NAVAL FACILITIES ENGINEERING COMMAND (NAVFAC)
1322 Patterson Ave. SE, Suite 1000
Washington Navy Yard, DC 20374-5065
Ph: 202-685-9387
Internet: http://www.navfac.navy.mil

UL ENVIRONMENT (ULE)
2211 Newmarket Parkway, Suite 106
Marietta, GA 30067
Ph: 770-933-0638
Fax: 770-980-0072
E-mail: environment@ul.com
Intertet: http://www.ul.com/environment

UNDERWRITERS LABORATORIES (UL)
2600 N.W. Lake Road
Camas, WA 98607-8542
Ph: 877-854-3577
E-mail: CEC.us@us.ul.com
Internet: http://www.ul.com/
UL Directories available through IHS at http://www.ihs.com

UNI-BELL PVC PIPE ASSOCIATION (UBPPA)
2711 LBJ Freeway, Suite 1000
Dallas, TX 75234
Ph: 972-243-3902
Fax: 972-243-3907
E-mail: info@uni-bell.org
Internet: http://www.uni-bell.org

WINDOW AND DOOR MANUFACTURERS ASSOCIATION (WDMA)
330 N Wabash Avenue, Suite 2000
Chicago, IL 60611
Ph: 312-321-6802
E-mail: wdma@wdma.com
Internet: http://www.wdma.com

PART 2 PRODUCTS

Not used

PART 3 EXECUTION

Not used

-- End of Section --

SECTION 01 45 00.00 20

QUALITY CONTROL
11/11

PART 1 GENERAL

1.1 REFERENCES

The publications listed below form a part of this specification to the extent referenced. The publications are referred to in the text by the basic designation only.

AMERICAN SOCIETY OF HEATING, REFRIGERATING AND AIR-CONDITIONING ENGINEERS (ASHRAE)

ASHRAE 52.2	(2012; Errata 2013; INT 1 2014; ADD A, B, AND D SUPP 2015) Method of Testing General Ventilation Air-Cleaning Devices for Removal Efficiency by Particle Size

ASTM INTERNATIONAL (ASTM)

ASTM D6245	(2012) Using Indoor Carbon Dioxide Concentrations to Evaluate Indoor Air Quality and Ventilation
ASTM D6345	(2010) Selection of Methods for Active, Integrative Sampling of Volatile Organic Compounds in Air

SHEET METAL AND AIR CONDITIONING CONTRACTORS' NATIONAL ASSOCIATION (SMACNA)

ANSI/SMACNA 008	(2007) IAQ Guidelines for Occupied Buildings Under Construction, 2nd Edition

U.S. ARMY CORPS OF ENGINEERS (USACE)

EM 385-1-1	(2014) Safety and Health Requirements Manual

1.2 SUBMITTALS

Government approval is required for submittals with a "G" designation; submittals not having a "G" designation are for Contractor Quality Control approval. Submittals with an "S" are for inclusion in the Sustainability Notebook, in conformance to Section 01 33 29 SUSTAINABILITY REPORTING. Submit the following in accordance with Section 01 33 00 SUBMITTAL PROCEDURES

SD-01 Preconstruction Submittals

Construction Quality Control (QC) Plan; G

Submit a Construction QC Plan prior to start of construction.

Indoor Air Quality (IAQ) Management Plan; G

SD-07 Certificates

CA Resume
FPE Resume

1.3 INFORMATION FOR THE CONTRACTING OFFICER

Prior to commencing work on construction, the Contractor can obtain a single copy set of the current report forms from the Contracting Officer. The report forms will consist of the Contractor Production Report, Contractor Production Report (Continuation Sheet), Contractor Quality Control (CQC) Report, CQC Report (Continuation Sheet), Preparatory Phase Checklist, Initial Phase Checklist, Rework Items List, and Testing Plan and Log.

Deliver the following to the Contracting Officer during Construction:

a. CQC Report: Submit the report electronically by 10:00 AM the next working day after each day that work is performed and for every seven consecutive calendar days of no-work.

b. Contractor Production Report: Submit the report electronically by 10:00 AM the next working day after each day that work is performed and for every seven consecutive calendar days of no-work.

c. Preparatory Phase Checklist: Submit the report electronically in the same manner as the CQC Report for each Preparatory Phase held.

d. Initial Phase Checklist: Submit the report electronically in the same manner as the CQC Report for each Initial Phase held.

e. QC Specialist Reports: Submit the report electronically by 10:00 AM the next working day after each day that work is performed.

f. Field Test Reports: Within two working days after the test is performed, submit the report as an electronic attachment to the CQC Report.

g. Monthly Summary Report of Tests: Submit the report as an electronic attachment to the CQC Report at the end of each month.

h. Testing Plan and Log: Submit the report as an electronic attachment to the CQC Report, at the end of each month. Provide a copy of the final Testing Plan and Log to the OMSI preparer for inclusion into the OMSI documentation.

i. Rework Items List: Submit lists containing new entries daily, in the same manner as the CQC Report.

j. CQC Meeting Minutes: Within two working days after the meeting is held, submit the report as an electronic attachment to the CQC Report.

k. QC Certifications: As required by the paragraph entitled "QC Certifications."

1.4 QC PROGRAM REQUIREMENTS

Establish and maintain a QC program as described in this section. This QC program is a key element in meeting the objectives of NAVFAC Commissioning. The QC program consists of a QC Organization, QC Plan, QC Plan Meeting(s), a Coordination and Mutual Understanding Meeting, QC meetings, three phases of control, submittal review and approval, testing, completion inspections, QC certifications, and documentation necessary to provide materials, equipment, workmanship, fabrication, construction and operations which comply with the requirements of this Contract. The QC program must cover on-site and off-site work and be keyed to the work sequence. No construction work or testing may be performed unless the QC Manager is on the work site. The QC Manager must report to an officer of the firm and not be subordinate to the Project Superintendent or the Project Manager. The QC Manager, Project Superintendent and Project Manager must work together effectively. Although the QC Manager is the primary individual responsible for quality control, all individuals will be held responsible for the quality of work on the job.

1.4.1 Commissioning

Commissioning (Cx) is a systematic process of ensuring that all building systems meet the requirements and perform interactively according to the Contract. The QC Program is a key to this process by coordinating, verifying and documenting measures to achieve the following objectives:

a. Verify and document that the applicable equipment and systems are installed in accordance with the design intent as expressed through the Contract and according to the manufacturer's recommendations and industry accepted minimum standards.

b. Verify and document that equipment and systems receive complete operational checkout by the installing contractors.

c. Verify and document proper performance of equipment and systems.

d. Verify that Operation and Maintenance (O&M) documentation is complete.

e. Verify the Training Plan and training materials are accurate and provide correct instruction and documentation on the critical elements of the products, materials, and systems in the constructed facility. Verify that all identified Government operating personnel are trained.

f. Verify and document that all contract requirements for LEED fundamental commissioning are met.

1.4.2 Acceptance of the Construction Quality Control (QC) Plan

Acceptance of the QC Plan is required prior to the start of construction. The Contracting Officer reserves the right to require changes in the QC Plan and operations as necessary, including removal of personnel, to ensure the specified quality of work. The Contracting Officer reserves the right to interview any member of the QC organization at any time in order to verify the submitted qualifications. All QC organization personnel are subject to acceptance by the Contracting Officer. The Contracting Officer may require the removal of any individual for non-compliance with quality requirements specified in the Contract.

1.4.3 Preliminary Construction Work Authorized Prior to Acceptance

The only construction work that is authorized to proceed prior to the acceptance of the QC Plan is mobilization of storage and office trailers, temporary utilities, and surveying.

1.4.4 Notification of Changes

Notify the Contracting Officer, in writing, of any proposed changes in the QC Plan or changes to the QC organization personnel, a minimum of 10 work days prior to a proposed change. Proposed changes are subject to acceptance by the Contracting Officer.

1.5 QC ORGANIZATION

1.5.1 QC Manager

1.5.1.1 Duties

Provide a QC Manager at the work site to implement and manage the QC program. The only duties and responsibilities of the QC Manager are to manage and implement the QC program on this Contract. The QC Manager is required to attend the partnering meetings, QC Plan Meetings, Coordination and Mutual Understanding Meeting, conduct the QC meetings, perform the three phases of control except for those phases of control designated to be performed by QC Specialists, perform submittal review and approval, ensure testing is performed and provide QC certifications and documentation required in this Contract. The QC Manager is responsible for managing and coordinating the three phases of control and documentation performed by the QC Specialists, testing laboratory personnel and any other inspection and testing personnel required by this Contract. The QC Manager is the manager of all QC activities.

1.5.1.2 Qualifications

A graduate of a four year accredited college or university program in one of the following disciplines: Engineering, Architecture, Construction Management, Engineering Technology, Building Construction, or Building Science, with a minimum of 10 years experience as a Project Superintendent, QC Manager, Project Manager, Project Engineer or Construction Manager on similar size and type construction contracts which included the major trades that are part of this Contract. The individual must have at least two years experience as a QC Manager. The individual must be familiar with the requirements of EM 385-1-1, and have experience in the areas of hazard identification, safety compliance, and sustainability.

1.5.2 Commissioning Authority

1.5.2.1 Duties

Provide a Commissioning Authority (CA) as key person for the Cx and documentation thereof, who is subordinate to the QC Manager. The CA directs and coordinates Cx activities and submits Cx reports to the Contracting Officer to meet the submittal and reporting requirements ofCommissioning and develops the commissioning plan. The CA coordinates the actions of the QC Specialists, Testing Laboratory personnel, eOMSI Preparer, and other inspection and testing personnel required by this Contract for building Cx.

1.5.2.2 Qualifications

The CA must be certified as a commissioning professional by the Associated Air Balance Council (AABC) Commissioning Group (ACG), the Association of Energy Engineers (AEE), the American Society of Heating, Refrigeration, and Air Conditioning Engineers (ASHRAE), the Commissioning Process Management Professional (CPMP), the Building Commissioning Association (BCA), the National Environmental Balancing Bureau (NEBB), or the University of Wisconsin - Madison (UWM). CA resume is required, providing education, experience and management capabilities on at least two similar size and type contracts. The CA may not have been involved with the project design, construction management, or supervision.

1.5.3 Construction Quality Management Training

In addition to the above experience and education requirements, the QC Manager must have completed the course entitled "Construction Quality Management (CQM) for Contractors." If the QC Manager does not have a current certification, they must obtain the CQM for Contractors course certification within 90 days of award. This course is periodically offered by the Naval Facilities Engineering Command and the Army Corps of Engineers. Contact the Contracting Officer for information on the next scheduled class.

1.5.4 Alternate QC Manager Duties and Qualifications

Designate an alternate for the QC Manager at the work site to serve in the event of the designated QC Manager's absence. The period of absence may not exceed two weeks at one time, and not more than 30 workdays during a calendar year. The qualification requirements for the Alternate QC Manager must be the same as for the QC Manager.

1.5.5 Assistant QC Manager Duties and Qualifications

Provide an assistant to the QC manager at the work site to perform the three phases of control, perform submittal review, ensure testing is performed, and prepare QC certifications and documentation required by this contract. The individual must be familiar with the requirements of EM 385-1-1, and have experience in the areas of hazard identification and safety compliance.

1.5.6 QC Specialists Duties and Qualifications

Provide a separate QC Specialist at the work site for each of the areas of responsibilities, specified in Part 3, Execution, of the technical sections, who must assist and report to the QC Manager and who must have no duties other than their assigned quality control duties. QC Specialists are required to attend the Coordination and Mutual Understanding Meeting, QC meetings and be physically present at the construction site to perform the three phases of control and prepare documentation for each definable feature of work in their area of responsibility at the frequency specified below.

Qualification/Experience in Area of Responsibility	Area of Responsibility	Frequency
Coating Inspector / (no other duties) SSPC QP 5, Level III	See Sections 09 97 13.27, 09 97 13.15, and 33 52 80 surface prepartion, testing, surface preparation, coating application, initial cure and coating repair work	Full time during coating work
Protective Coating Specialist	Pipe Coating Application See Sections 09 97 13.27, 09 97 13.15, and 33 52 80	Pre-Application
Coating Manufacturer's Representative - 5 Years minimum	Coating Application See Sections 09 97 13.27, 09 97 13.15, and 33 52 80	Pre-Application
API 653 Certified Tank Inpsector - 5 years minimum	See Section 33 56 13.13 Tank erection and testing	One eight hour day per wek during erection and testing
Single System Supplier	See Sections 33 52 43, 33 08 53, 33 52 43.11, and 33 09 54 startup, testing and training of control systems	Full time during startup, testing and training
Control Valve Manufacturer's Representative/ 5 years	Control Valve Startup and testing	Full time during starup testing.
Cathodic Protection Specialist/ 5 years	See Sections 26 42 19.00 20 and 26 42 13.00 20 Installing, starting, testing and treating of Cathodic Protection Systems.	Full time during installation, startup, testing and training.

1.5.7 Registered Fire Protection Engineer

The U.S. Registered Fire Protection Engineer (FPE) must be an independent third party hired directly by the Prime Contractor as an integral part of the Prime Contractor's Quality Control Organization. This FPE must have no business relationships (owner, partner, operating officer, distributor, salesman, or technical representative) with any subcontractors involved with this project, or with any fire protection equipment device manufacturers, suppliers or installers for any such equipment provided as part of this project. This FPE is responsible for review, approval, and coordination of all fire protection system material submittals, calculations, shop drawings, etc. The FPE must attend, certify the completion of, and be in charge of the Preliminary Tests, Final Acceptance

Tests, and Inspections as outlined in Section 3 Execution of Specifications 07 87 00, 21 13 13.00 20, 28 31 63.00 20, and 28 31 76. FPE resume is required, providing education and experience on at least two similar size and type contracts.

1.5.8 Submittal Reviewer Duties and Qualifications

Provide a Submittal Reviewer, other than the QC Manager or CA, qualified in the disciplines being reviewed, to review and certify that the submittals meet the requirements of this Contract prior to certification or approval by the QC Manager.

Each submittal must be reviewed by a registered architect or professional engineer.

1.5.9 QC Administrative Assistant

Provide an Administrative Assistant at the work site until the work has been accepted. The primary duty is to assist the QC Manager in processing and maintaining files for submittals, preparing and publishing reports and meeting minutes. After primary duties are accomplished, other duties may be assigned provided the duties do not interfere with primary duties.

1.6 QUALITY CONTROL (QC) PLAN

1.6.1 Construction Quality Control (QC) Plan

1.6.1.1 Requirements

Provide, for acceptance by the Contracting Officer, a Construction QC Plan submitted in a three-ring binder that includes a table of contents, with major sections identified with tabs, with pages numbered sequentially, and that documents the proposed methods and responsibilities for accomplishing quality control commissioning activities during the construction of the project:

a. QC ORGANIZATION: A chart showing the QC organizational structure.

b. NAMES AND QUALIFICATIONS: Names and qualifications, in resume format, for each person in the QC organization. Include the CQM for Contractors course certifications for the QC Manager and Alternate QC Manager as required by the paragraphs entitled "Construction Quality Management Training" and "Alternate QC Manager Duties and Qualifications".

c. DUTIES, RESPONSIBILITY AND AUTHORITY OF QC PERSONNEL: Duties, responsibilities, and authorities of each person in the QC organization.

d. OUTSIDE ORGANIZATIONS: A listing of outside organizations, such as architectural and consulting engineering firms, that will be employed by the Contractor and a description of the services these firms will provide.

e. APPOINTMENT LETTERS: Letters signed by an officer of the firm appointing the QC Manager and Alternate QC Manager and stating that

they are responsible for implementing and managing the QC program as described in this Contract. Include in this letter the responsibility of the QC Manager and Alternate QC Manager to implement and manage the three phases of control, and their authority to stop work which is not in compliance with the Contract. Letters of direction are to be issued by the QC Manager to the Assistant QC Manager and all other QC Specialists outlining their duties, authorities, and responsibilities. Include copies of the letters in the QC Plan.

f. SUBMITTAL PROCEDURES AND INITIAL SUBMITTAL REGISTER: Procedures for reviewing, approving, and managing submittals. Provide the name(s) of the person(s) in the QC organization authorized to review and certify submittals prior to approval. Provide the initial submittal of the Submittal Register as specified in Section 01 33 00 SUBMITTAL PROCEDURES.

g. TESTING LABORATORY INFORMATION: Testing laboratory information required by the paragraphs entitled "Accreditation Requirements", as applicable.

h. TESTING PLAN AND LOG: A Testing Plan and Log that includes the tests required, referenced by the specification paragraph number requiring the test, the frequency, and the person responsible for each test. Use Government forms to log and track tests.

i. PROCEDURES TO COMPLETE REWORK ITEMS: Procedures to identify, record, track, and complete rework items. Use Government forms to record and track rework items.

j. DOCUMENTATION PROCEDURES: Use Government form.

k. LIST OF DEFINABLE FEATURES: A Definable Feature of Work (DFOW) is a task that is separate and distinct from other tasks and has control requirements and work crews unique to that task. A DFOW is identified by different trades or disciplines and is an item or activity on the construction schedule. Include in the list of DFOWs, but not be limited to, all critical path activities on the NAS. Include all activities for which this specification requires QC Specialists or specialty inspection personnel. Provide separate DFOWs in the Network Analysis Schedule for each design development stage and submittal package.

l. PROCEDURES FOR PERFORMING THE THREE PHASES OF CONTROL: Identify procedures used to ensure the three phases of control to manage the quality on this project. For each DFOW, a Preparatory and Initial phase checklist will be filled out during the Preparatory and Initial phase meetings. Conduct the Preparatory and Initial Phases and meetings with a view towards obtaining quality construction by planning ahead and identifying potential problems for each DFOW.

m. PERSONNEL MATRIX: Not Applicable

n. PROCEDURES FOR COMPLETION INSPECTION: Procedures for identifying and documenting the completion inspection process. Include in these procedures the responsible party for punch out inspection, pre-final inspection, and final acceptance inspection.

o. TRAINING PROCEDURES AND TRAINING LOG: Procedures for coordinating and documenting the training of personnel required by the Contract.

p. ORGANIZATION AND PERSONNEL CERTIFICATIONS LOG: Procedures for coordinating, tracking and documenting all certifications on subcontractors, testing laboratories, suppliers, personnel, etc. QC Manager will ensure that certifications are current, appropriate for the work being performed, and will not lapse during any period of the contract that the work is being performed.

1.7 COORDINATION AND MUTUAL UNDERSTANDING MEETING

After submission of the QC Plan, and prior to Government approval and the start of construction, the QC Manager will meet with the Contracting Officer to present the QC program required by this Contract. When a new QC Manager is appointed, the coordination and mutual understanding meeting must be repeated.

1.7.1 Purpose

The purpose of this meeting is to develop a mutual understanding of the QC details, including documentation, administration for on-site and off-site work, design intent, Cx, environmental requirements and procedures, coordination of activities to be performed, and the coordination of the Contractor's management, production, and QC personnel. At the meeting, the Contractor will be required to explain in detail how three phases of control will be implemented for each DFOW, as well as how each DFOW will be affected by each management plan or requirement as listed below:

a. Waste Management Plan.

b. IAQ Management Plan.

c. Procedures for noise and acoustics management.

d. Environmental Protection Plan.

e. Environmental regulatory requirements.

f. Cx Plan.

1.7.2 Coordination of Activities

Coordinate activities included in various sections to assure efficient and orderly installation of each component. Coordinate operations included under different sections that are dependent on each other for proper installation and operation. Schedule construction operations with consideration for indoor air quality as specified in the IAQ Management Plan. Coordinate prefunctional tests and startup testing with Cx. Coordinate special inspections.

1.7.3 Attendees

As a minimum, the Contractor's personnel required to attend include an officer of the firm, the Project Manager, Project Superintendent, QC Manager, Alternate QC Manager, Assistant QC Manager, QC Specialists, CA, Environmental Manager, and subcontractor representatives. Each subcontractor who will be assigned QC responsibilities must have a principal of the firm at the meeting. Minutes of the meeting will be prepared by the QC Manager and signed by the Contractor and the Contracting Officer. Provide a copy of the signed minutes to all attendees

and include in the QC Plan.

1.8 QC MEETINGS

After the start of construction, conduct weekly QC meetings by the QC Manager at the work site with the Project Superintendent, the QC Specialists, the CA, and the foremen who are performing the work of the DFOWs. The QC Manager is to prepare the minutes of the meeting and provide a copy to the Contracting Officer within two working days after the meeting. The Contracting Officer may attend these meetings. As a minimum, accomplish the following at each meeting:

a. Review the minutes of the previous meeting.

b. Review the schedule and the status of work and rework.

c. Review the status of submittals.

d. Review the work to be accomplished in the next two weeks and documentation required.

e. Resolve QC and production problems (RFI, etc.).

f. Address items that may require revising the QC Plan.

g. Review Accident Prevention Plan (APP).

h. Review environmental requirements and procedures.

i. Review Waste Management Plan.

j. Review IAQ Management Plan.

k. Review Environmental Management Plan.

l. Review the status of training completion.

m. Review Cx Plan and progress.

1.9 THREE PHASES OF CONTROL

Adequately cover both on-site and off-site work with the Three Phases of Control and include the following for each DFOW.

1.9.1 Preparatory Phase

Notify the Contracting Officer at least two work days in advance of each preparatory phase meeting. The meeting will be conducted by the QC Manager and attended by the QC Specialists, the Project Superintendent, the CA, and the foreman responsible for the DFOW. When the DFOW will be accomplished by a subcontractor, that subcontractor's foreman must attend the preparatory phase meeting. Document the results of the preparatory phase actions in the daily Contractor Quality Control Report and in the Preparatory Phase Checklist. Perform the following prior to beginning work on each DFOW:

a. Review each paragraph of the applicable specification sections.

b. Review the Contract drawings.

c. Verify that field measurements are as indicated on construction and/or shop drawings before confirming product orders, in order to minimize waste due to excessive materials.

d. Verify that appropriate shop drawings and submittals for materials and equipment have been submitted and approved. Verify receipt of approved factory test results, when required.

e. Review the testing plan and ensure that provisions have been made to provide the required QC testing.

f. Examine the work area to ensure that the required preliminary work has been completed.

g. Coordinate the schedule of product delivery to designated prepared areas in order to minimize site storage time and potential damage to stored materials.

h. Arrange for the return of shipping/packaging materials, such as wood pallets, where economically feasible.

i. Examine the required materials, equipment and sample work to ensure that they are on hand and conform to the approved shop drawings and submitted data and are properly stored.

j. Discuss specific controls used and construction methods, construction tolerances, workmanship standards, and the approach that will be used to provide quality construction by planning ahead and identifying potential problems for each DFOW.

k. Review the APP and appropriate Activity Hazard Analysis (AHA) to ensure that applicable safety requirements are met, and that required Material Safety Data Sheets (MSDS) are submitted.

l. Review the Cx Plan and ensure all preliminary work items have been completed and documented.

1.9.2 Initial Phase

Notify the Contracting Officer at least two work days in advance of each initial phase. When construction crews are ready to start work on a DFOW, conduct the initial phase with the QC Specialists, the Project Superintendent, and the foreman responsible for that DFOW. Observe the initial segment of the DFOW to ensure that the work complies with Contract requirements. Document the results of the initial phase in the daily CQC Report and in the Initial Phase Checklist. Repeat the initial phase for each new crew to work on-site, or when acceptable levels of specified quality are not being met. Perform the following for each DFOW:

a. Establish level of workmanship and verify that it meets the minimum acceptable workmanship standards. Compare with required sample panels as appropriate.

b. Resolve any workmanship issues.

c. Ensure that testing is performed by the approved laboratory.

d. Check work procedures for compliance with the APP and the appropriate

AHA to ensure that applicable safety requirements are met.

e. Review project specific work plans (i.e. Cx, HAZMAT Abeatement, Stormwater Management) to ensure all preparatory work items have been completed and documented.

1.9.3 Follow-Up Phase

Perform the following for on-going work daily, or more frequently as necessary, until the completion of each DFOW and document in the daily CQC Report:

a. Ensure the work is in compliance with Contract requirements.

b. Maintain the quality of workmanship required.

c. Ensure that testing is performed by the approved laboratory.

d. Ensure that rework items are being corrected.

e. Assure manufacturers representatives have performed necessary inspections if required and perform safety inspections.

f. Review the Cx Plan and ensure all work items, testing, and documentation has been completed.

1.9.4 Additional Preparatory and Initial Phases

Conduct additional preparatory and initial phases on the same DFOW if the quality of on-going work is unacceptable, if there are changes in the applicable QC organization, if there are changes in the on-site production supervision or work crew, if work on a DFOW is resumed after substantial period of inactivity, or if other problems develop.

1.9.5 Notification of Three Phases of Control for Off-Site Work

Notify the Contracting Officer at least two weeks prior to the start of the preparatory and initial phases.

1.10 SUBMITTAL REVIEW AND APPROVAL

Procedures for submission, review and approval of submittals are described in Section 01 33 00 SUBMITTAL PROCEDURES.

1.11 TESTING

Except as stated otherwise in the specification sections, perform sampling and testing required under this Contract.

1.11.1 Accreditation Requirements

Construction materials testing laboratories must be accredited by a laboratory accreditation authority and will be required to submit a copy of the Certificate of Accreditation and Scope of Accreditation. The laboratory's scope of accreditation must include the appropriate ASTM standards (E 329, C 1077, D 3666, D 3740, A 880, E 543) listed in the technical sections of the specifications. Laboratories engaged in Hazardous Materials Testing must meet the requirements of OSHA and EPA. The policy applies to the specific laboratory performing the actual

testing, not just the Corporate Office.

1.11.2 Laboratory Accreditation Authorities

Laboratory Accreditation Authorities include the National Voluntary Laboratory Accreditation Program (NVLAP) administered by the National Institute of Standards and Technology at http://ts.nist.gov/ts/htdocs/210/214/214.htm , the American Association of State Highway and Transportation Officials (AASHTO) program at http://www.amrl.net/amrlsitefinity/default/aap.aspx , International Accreditation Services, Inc. (IAS) at http://www.iasonline.org, U. S. Army Corps of Engineers Materials Testing Center (MTC) at http://gsl.erdc.usace.army.mil/SL/MTC/, the American Association for Laboratory Accreditation (A2LA) program at http://www.a2la.org/, the Washington Association of Building Officials (WABO) at http://www.wabo.org/ (Approval authority for WABO is limited to projects within Washington State), and the Washington Area Council of Engineering Laboratories (WACEL) at http://wacel.org/fmi/xsl/wacel/index.xsl (Approval authority by WACEL is limited to projects within Facilities Engineering Command (FEC) Washington geographical area).

1.11.3 Capability Check

The Contracting Officer retains the right to check laboratory equipment in the proposed laboratory and the laboratory technician's testing procedures, techniques, and other items pertinent to testing, for compliance with the standards set forth in this Contract.

1.11.4 Test Results

Cite applicable Contract requirements, tests or analytical procedures used. Provide actual results and include a statement that the item tested or analyzed conforms or fails to conform to specified requirements. If the item fails to conform, notify the Contracting Officer immediately. Conspicuously stamp the cover sheet for each report in large red letters "CONFORMS" or "DOES NOT CONFORM" to the specification requirements, whichever is applicable. Test results must be signed by a testing laboratory representative authorized to sign certified test reports. Furnish the signed reports, certifications, and other documentation to the Contracting Officer via the QC Manager. Furnish a summary report of field tests at the end of each month, in accordance with paragraph INFORMATION FOR THE CONTRACTING OFFICER.

1.11.5 Test Reports and Monthly Summary Report of Tests

Furnish the signed reports, certifications, and a summary report of field tests at the end of each month to the Contracting Officer. Attach a copy of the summary report to the last daily Contractor Quality Control Report of each month. Provide a copy of the signed test reports and certifications to the OMSI preparer for inclusion into the OMSI documentation.

1.12 QC CERTIFICATIONS

1.12.1 CQC Report Certification

Contain the following statement within the CQC Report: "On behalf of the Contractor, I certify that this report is complete and correct and equipment and material used and work performed during this reporting

period is in compliance with the contract drawings and specifications to the best of my knowledge, except as noted in this report."

1.12.2 Invoice Certification

Furnish a certificate to the Contracting Officer with each payment request, signed by the QC Manager, attesting that as-built drawings are current, coordinated and attesting that the work for which payment is requested, including stored material, is in compliance with Contract requirements.

1.12.3 Completion Certification

Upon completion of work under this Contract, the QC Manager must furnish a certificate to the Contracting Officer attesting that "the work has been completed, inspected, tested and is in compliance with the Contract." Provide a copy of this final QC Certification for completion to the OMSI preparer for inclusion into the OMSI documentation.

1.13 COMPLETION INSPECTIONS

1.13.1 Punch-Out Inspection

Near the completion of all work or any increment thereof, established by a completion time stated in the Contract Clause entitled "Commencement, Prosecution, and Completion of Work," or stated elsewhere in the specifications, the QC Manager and the CA must conduct an inspection of the work and develop a "punch list" of items which do not conform to the approved drawings, specifications and Contract. Include in the punch list any remaining items on the "Rework Items List", which were not corrected prior to the Punch-Out Inspection. Include within the punch list the estimated date by which the deficiencies will be corrected. Provide a copy of the punch list to the Contracting Officer. The QC Manager, or staff, must make follow-on inspections to ascertain that all deficiencies have been corrected. Once this is accomplished, notify the Government that the facility is ready for the Government "Pre-Final Inspection".

1.13.2 Pre-Final Inspection

The Government and QCM will perform this inspection to verify that the facility is complete and ready to be occupied. A Government "Pre-Final Punch List" will be documented by the CQM as a result of this inspection. The QC Manager will ensure that all items on this list are corrected prior to notifying the Government that a "Final" inspection with the Client can be scheduled. Any items noted on the "Pre-Final" inspection must be corrected in a timely manner and be accomplished before the contract completion date for the work,or any particular increment thereof, if the project is divided into increments by separate completion dates.

1.13.3 Final Acceptance Inspection

Notify the Contracting Officer at least 14 calendar days prior to the date a final acceptance inspection can be held. State within the notice that all items previously identified on the pre-final punch list will be corrected and acceptable, along with any other unfinished Contract work, by the date of the final acceptance inspection. The Contractor must be represented by the QC Manager, the Project Superintendent, the CA, and others deemed necessary. Attendees for the Government will include the Contracting Officer, other FEAD/ROICC personnel, and personnel

representing the Client. Failure of the Contractor to have all contract work acceptably complete for this inspection will be cause for the Contracting Officer to bill the Contractor for the Government's additional inspection cost in accordance with the Contract Clause entitled "Inspection of Construction."

1.14 DOCUMENTATION

Maintain current and complete records of on-site and off-site QC program operations and activities.

1.14.1 Construction Documentation

Reports are required for each day that work is performed and must be attached to the Contractor Quality Control Report prepared for the same day. Maintain current and complete records of on-site and off-site QC program operations and activities. The forms identified under the paragraph "INFORMATION FOR THE CONTRACTING OFFICER" will be used. Reports are required for each day work is performed. Account for each calendar day throughout the life of the Contract. Every space on the forms must be filled in. Use N/A if nothing can be reported in one of the spaces. The Project Superintendent and the QC Manager must prepare and sign the Contractor Production and CQC Reports, respectively. The reporting of work must be identified by terminology consistent with the construction schedule. In the "remarks" sections of the reports, enter pertinent information including directions received, problems encountered during construction, work progress and delays, conflicts or errors in the drawings or specifications, field changes, safety hazards encountered, instructions given and corrective actions taken, delays encountered and a record of visitors to the work site, quality control problem areas, deviations from the QC Plan, construction deficiencies encountered, meetings held. For each entry in the report(s), identify the Schedule Activity No. that is associated with the entered remark.

1.14.2 Quality Control Validation

Establish and maintain the following in a series of three ring binders. Binders must be divided and tabbed as shown below. These binders must be readily available to the Contracting Officer during all business hours.

a. All completed Preparatory and Initial Phase Checklists, arranged by specification section.

b. All milestone inspections, arranged by Activity Number.

c. An up-to-date copy of the Testing Plan and Log with supporting field test reports, arranged by specification section.

d. Copies of all contract modifications, arranged in numerical order. Also include documentation that modified work was accomplished.

e. An up-to-date copy of the Rework Items List.

f. Maintain up-to-date copies of all punch lists issued by the QC staff to the Contractor and Sub-Contractors and all punch lists issued by the Government.

g. Commissioning documentation including Cx checklists, schedules, tests, and reports.

1.14.3 Reports from the QC Specialist(s)

Reports are required for each day that work is performed in their area of responsibility. QC Specialist reports must include the same documentation requirements as the CQC Report for their area of responsibility. QC Specialist reports are to be prepared, signed and dated by the QC Specialists and must be attached to the CQC Report prepared for the same day.

1.14.4 Testing Plan and Log

As tests are performed, the CA and the QC Manager will record on the "Testing Plan and Log" the date the test was performed and the date the test results were forwarded to the Contracting Officer. Attach a copy of the updated "Testing Plan and Log" to the last daily CQC Report of each month, per the paragraph "INFORMATION FOR THE CONTRACTING OFFICER". Provide a copy of the final "Testing Plan and Log" to the OMSI preparer for inclusion into the OMSI documentation.

1.14.5 Rework Items List

The QC Manager must maintain a list of work that does not comply with the Contract, identifying what items need to be reworked, the date the item was originally discovered, the date the item will be corrected by, and the date the item was corrected. There is no requirement to report a rework item that is corrected the same day it is discovered. Attach a copy of the "Rework Items List" to the last daily CQC Report of each month. The Contractor is responsible for including those items identified by the Contracting Officer.

1.14.6 As-Built Drawings

The QC Manager is required to ensure the as-built drawings, required by Section 01 78 00 CLOSEOUT SUBMITTALS are kept current on a daily basis and marked to show deviations which have been made from the Contract drawings. Ensure each deviation has been identified with the appropriate modifying documentation (e.g. PC No., Modification No., Request for Information No., etc.). The QC Manager or QC Specialist assigned to an area of responsibility must initial each revision. Upon completion of work, the QC Manager will furnish a certificate attesting to the accuracy of the as-built drawings prior to submission to the Contracting Officer.

1.15 NOTIFICATION ON NON-COMPLIANCE

The Contracting Officer will notify the Contractor of any detected non-compliance with the Contract. Take immediate corrective action after receipt of such notice. Such notice, when delivered to the Contractor at the work site, is deemed sufficient for the purpose of notification. If the Contractor fails or refuses to comply promptly, the Contracting Officer may issue an order stopping all or part of the work until satisfactory corrective action has been taken. No part of the time lost due to such stop orders will be made the subject of claim for extension of time for excess costs or damages by the Contractor.

1.16 CONSTRUCTION INDOOR AIR QUALITY (IAQ) MANAGEMENT PLAN

Submit an IAQ Management Plan within 15 days after Contract award and not less than 10 days before the preconstruction meeting. Revise and resubmit

Plan as required by the Contracting Officer. Make copies of the final plan available to all workers on site. Include provisions in the Plan to meet the requirements specified below and to ensure safe, healthy air for construction workers and building occupants.

1.16.1 Requirements During Construction

Provide for evaluation of indoor Carbon Dioxide concentrations in accordance with ASTM D6245. Provide for evaluation of volatile organic compounds (VOCs) in indoor air in accordance with ASTM D6345. Use filters with a Minimum Efficiency Reporting Value (MERV) of 8 in permanently installed air handlers during construction.

1.16.1.1 Control Measures

Meet or exceed the requirements of ANSI/SMACNA 008, Chapter 3, to help minimize contamination of the building from construction activities. The five requirements of this manual which must be adhered to are described below:

a. HVAC protection: Isolate return side of HVAC system from surrounding environment to prevent construction dust and debris from entering the duct work and spaces.

b. Source control: Use low emitting paints and other finishes, sealants, adhesives, and other materials as specified. When available, cleaning products must have a low VOC content and be non-toxic to minimize building contamination. Utilize cleaning techniques that minimize dust generation. Cycle equipment off when not needed. Prohibit idling motor vehicles where emissions could be drawn into building. Designate receiving/storage areas for incoming material that minimize IAQ impacts.

c. Pathway interruption: When pollutants are generated use strategies such as 100 percent outside air ventilation or erection of physical barriers between work and non-work areas to prevent contamination.

d. Housekeeping: Clean frequently to remove construction dust and debris. Promptly clean up spills. Remove accumulated water and keep work areas dry to discourage the growth of mold and bacteria. Take extra measures when hazardous materials are involved.

e. Scheduling: Control the sequence of construction to minimize the absorption of VOCs by other building materials.

1.16.1.2 Moisture Contamination

a. Remove accumulated water and keep work dry.

b. Use dehumidification to remove moist, humid air from a work area.

c. Do not use combustion heaters or generators inside the building.

d. Protect porous materials from exposure to moisture.

e. Remove and replace items which remain damp for more than a few hours.

1.16.2 Requirements after Construction

After construction ends and prior to occupancy, conduct a building flush-out or test the indoor air contaminant levels. Flush-out must be a minimum two-weeks with MERV-13 filtration media as determined by ASHRAE 52.2at 100 percent outside air. Air contamination testing must be consistent with EPA's current Compendium of Methods for the Determination of Air Pollutants in Indoor Air. After building flush-out or testing and prior to occupancy, replace filtration media. Filtration media must have a MERV of 13 as determined by ASHRAE 52.2.

PART 2 PRODUCTS

Not Used

PART 3 EXECUTION

3.1 PREPARATION

Designate receiving/storage areas for incoming material to be delivered according to installation schedule and to be placed convenient to work area in order to minimize waste due to excessive materials handling and misapplication. Store and handle materials in a manner as to prevent loss from weather and other damage. Keep materials, products, and accessories covered and off the ground, and store in a dry, secure area. Prevent contact with material that may cause corrosion, discoloration, or staining. Protect all materials and installations from damage by the activities of other trades.

-- End of Section --

SECTION 01 50 00

TEMPORARY CONSTRUCTION FACILITIES AND CONTROLS
08/09

PART 1 GENERAL

1.1 REFERENCES

The publications listed below form a part of this specification to the extent referenced. The publications are referred to within the text by the basic designation only.

AMERICAN WATER WORKS ASSOCIATION (AWWA)

AWWA C511	(2007) Standard for Reduced-Pressure Principle Backflow Prevention Assembly

FOUNDATION FOR CROSS-CONNECTION CONTROL AND HYDRAULIC RESEARCH (FCCCHR)

FCCCHR List	(continuously updated) List of Approved Backflow Prevention Assemblies
FCCCHR Manual	(10th Edition) Manual of Cross-Connection Control

NATIONAL FIRE PROTECTION ASSOCIATION (NFPA)

NFPA 241	(2013) Standard for Safeguarding Construction,Alteration, and Demolition Operations
NFPA 70	(2014; AMD 1 2013; Errata 1 2013; AMD 2 2013; Errata 2 2013; AMD 3 2014; Errata 3-4 2014; AMD 4-6 2014) National Electrical Code

U.S. FEDERAL AVIATION ADMINISTRATION (FAA)

FAA AC 70/7460-1	(2007; Rev K) Obstruction Marking and Lighting

1.2 SUBMITTALS

Government approval is required for submittals with a "G" designation; submittals not having a "G" designation are for Contractor Quality Control approval. Submittals with an "S" are for inclusion in the Sustainability Notebook, in conformance to Section 01 33 29 SUSTAINABILITY REPORTING. Submit the following in accordance with Section 01 33 00 SUBMITTAL PROCEDURES:

SD-01 Preconstruction Submittals

Construction Site Plan; G
Traffic Control Plan; G

SD-03 Product Data

Backflow Preventers; G

SD-06 Test Reports

Backflow Preventer Tests

SD-07 Certificates

Backflow Tester Certification

Backflow Preventers Certificate of Full Approval

1.3 CONSTRUCTION SITE PLAN

Prior to the start of work, submit a site plan showing the locations and dimensions of temporary facilities (including layouts and details, equipment and material storage area (onsite and offsite), and access and haul routes, avenues of ingress/egress to the fenced area and details of the fence installation. Identify any areas which may have to be graveled to prevent the tracking of mud. Indicate if the use of a supplemental or other staging area is desired. Show locations of safety and construction fences, site trailers, construction entrances, trash dumpsters, temporary sanitary facilities, and worker parking areas.

1.4 BACKFLOW PREVENTERS CERTIFICATE

Certificate of Full Approval from FCCCHR List, University of Southern California, attesting that the design, size and make of each backflow preventer has satisfactorily passed the complete sequence of performance testing and evaluation for the respective level of approval. Certificate of Provisional Approval will not be acceptable.

1.4.1 Backflow Tester Certificate

Prior to testing, submit to the Contracting Officer certification issued by the State or local regulatory agency attesting that the backflow tester has successfully completed a certification course sponsored by the regulatory agency. Tester must not be affiliated with any company participating in any other phase of this Contract.

1.4.2 Backflow Prevention Training Certificate

Submit a certificate recognized by the State or local authority that states the Contractor has completed at least 10 hours of training in backflow preventer installations. The certificate must be current.

PART 2 PRODUCTS

2.1 TEMPORARY SIGNAGE

2.1.1 Bulletin Board

Immediately upon beginning of work, provide a weatherproof glass-covered bulletin board not less than 915 by 1220 mm in size for displaying the Equal Employment Opportunity poster, a copy of the wage decision contained in the contract, Wage Rate Information poster, and other information approved by the Contracting Officer.

2.1.2 Project and Safety Signs

The requirements for the signs, their content, and location are as specified in Section 01 58 00 PROJECT IDENTIFICATION. Erect signs within 15 days after receipt of the notice to proceed. Correct the data required by the safety sign daily, with light colored metallic or non-metallic numerals.

2.2 TEMPORARY TRAFFIC CONTROL

2.2.1 Haul Roads

Construct access and haul roads necessary for proper prosecution of the work under this contract. Construct with suitable grades and widths; sharp curves, blind corners, and dangerous cross traffic are be avoided. Provide necessary lighting, signs, barricades, and distinctive markings for the safe movement of traffic. The method of dust control, although optional, must be adequate to ensure safe operation at all times. Location, grade, width, and alignment of construction and hauling roads are subject to approval by the Contracting Officer. Lighting must be adequate to assure full and clear visibility for full width of haul road and work areas during any night work operations.

2.2.2 Barricades

Erect and maintain temporary barricades to limit public access to hazardous areas. Whenever safe public access to paved areas such as roads, parking areas or sidewalks is prevented by construction activities or as otherwise necessary to ensure the safety of both pedestrian and vehicular traffic barricades will be required. Securely place barricades clearly visible with adequate illumination to provide sufficient visual warning of the hazard during both day and night.

2.2.3 Fencing

Provide fencing along the construction site at all open excavations and tunnels to control access by unauthorized people.

a. The safety fencing must be a high visibility orange colored, high density polyethylene grid or approved equal, a minimum of 1.2 m high and maximum mesh size of 50 mm, supported and tightly secured to steel posts located on maximum 3 m centers, constructed at the approved location. Install fencing to be able to restrain a force of at least 114.00 kg against it.

b. In addition, prior to the start of work, enclose those areas at the construction site which are not within the construction fence with a temporary safety fence, including gates and warning signs, to protect the public from construction activities. The safety fence shall match the base standard color (or bright orange where it protects excavated areas), shall be made of high density polyethylene grid or approved equal, a minimum of 1100 mm high, supported and tightly secured to steel posts located on minimum 3000 mm centers. Remove the fence from the work site upon completion of the contract.

2.2.4 Temporary Wiring

Provide temporary wiring in accordance with NFPA 241 and NFPA 70.

Include frequent inspection of all equipment and apparatus.

2.2.5 Backflow Preventers

Reduced pressure principle type conforming to the applicable requirements AWWA C511. Provide backflow preventers complete with 65 kg flanged cast iron, mounted gate valve , stainless steel or bronze, internal parts. The particular make, model/design, and size of backflow preventers to be installed must be included in the latest edition of the List of Approved Backflow Prevention Assemblies issued by the FCCCHR List and be accompanied by a Certificate of Full Approval from FCCCHR List. After installation conduct Backflow Preventer Tests and provide test reports verifying that the installation meets the FCCCHR Manual Standards.

PART 3 EXECUTION

3.1 EMPLOYEE PARKING

Contractor employees will park privately owned or rental vehicles in an area designated by the Contracting Officer. This area will be within reasonable walking distance of the construction site. Contractor employee parking must not interfere with existing and established parking requirements of the government installation.

3.2 TEMPORARY BULLETIN BOARD

Locate the bulletin board at the project site in a conspicuous place easily accessible to all employees, as approved by the Contracting Officer.

3.3 AVAILABILITY AND USE OF UTILITY SERVICES

3.3.1 Temporary Utilities

Provide temporary utilities required for construction. Materials may be new or used, must be adequate for the required usage, not create unsafe conditions, and not violate applicable codes and standards.

3.3.2 Payment for Utility Services

a. The Government will make all reasonably required utilities available to the Contractor from existing outlets and supplies, as specified in the contract. Unless otherwise provided in the contract, the amount of each utility service consumed will be charged to or paid for by the Contractor at prevailing rates charged to the Government or, where the utility is produced by the Government, at reasonable rates determined by the Contracting Officer. Carefully conserve any utilities furnished without charge.

b. Reasonable amounts of utilities will be made available to the Contractor without charge.

c. The point at which the Government will deliver such utilities or services and the quantity available is as indicated. Pay all costs incurred in connecting, converting, and transferring the utilities to the work. Make connections, including providing backflow-preventing devices on connections to domestic water lines; providing meters; and providing transformers; and make disconnections.

3.3.3 Sanitation

a. Provide and maintain within the construction area minimum field-type sanitary facilities approved by the Contracting Officer and periodically empty wastes into a municipal, district, or station sanitary sewage system, or remove waste to a commercial facility. Obtain approval from the system owner prior to discharge into any municipal, district, or commercial sanitary sewer system. Any penalties and / or fines associated with improper discharge will be the responsibility of the Contractor. Coordinate with the Contracting Officer and follow station regulations and procedures when discharging into the station sanitary sewer system. Maintain these conveniences at all times without nuisance. Include provisions for pest control and elimination of odors. Government toilet facilities will not be available to Contractor's personnel.

b. Provide temporary sewer and sanitation facilities that are self-contained units with both urinals and stool capabilities. Ventilate the units to control odors and fumes and empty and clean them at least once a week or more often if required by the Contracting Officer. The doors shall be self-closing. The exterior of the unit shall match the base standard color. Locate the facility behind the construction fence or out of the public view.

3.3.4 Telephone

Make arrangements and pay all costs for telephone facilities desired.

3.3.5 Obstruction Lighting of Cranes

Provide a minimum of 2 aviation red or high intensity white obstruction lights on temporary structures (including cranes) over 30 meter above ground level. Light construction and installation must comply with FAA AC 70/7460-1. Lights must be operational during periods of reduced visibility, darkness, and as directed by the Contracting Officer.

3.3.6 Fire Protection

Provide temporary fire protection equipment for the protection of personnel and property during construction. Remove debris and flammable materials weekly to minimize potential hazards.

3.4 TRAFFIC PROVISIONS

3.4.1 Maintenance of Traffic

a. Conduct operations in a manner that will not close any thoroughfare or interfere in any way with traffic on railways or highways except with written permission of the Contracting Officer at least 15 calendar days prior to the proposed modification date, and provide a Traffic Control Plan detailing the proposed controls to traffic movement for approval. The plan must be in accordance with Camp Lemonnier regulations. Contractor may move oversized and slow-moving vehicles to the worksite provided requirements of the highway authority have been met.

b. Conduct work so as to minimize obstruction of traffic, and maintain traffic on at least half of the roadway width at all times. Obtain approval from the Contracting Officer prior to starting any activity

that will obstruct traffic.

c. Provide, erect, and maintain, at contractors expense, lights, barriers, signals, passageways, detours, and other items, that may be required by the Life Safety Signage, overhead protection authority having jurisdiction.

3.4.2 Protection of Traffic

Maintain and protect traffic on all affected roads during the construction period except as otherwise specifically directed by the Contracting Officer. Measures for the protection and diversion of traffic, including the provision of watchmen and flagmen, erection of barricades, placing of lights around and in front of equipment the work, and the erection and maintenance of adequate warning, danger, and direction signs, will be as required by the State and local authorities having jurisdiction. Protect the traveling public from damage to person and property. Minimize the interference with public traffic on roads selected for hauling material to and from the site. Investigate the adequacy of existing roads and their allowable load limit. Contractor is responsible for the repair of any damage to roads caused by construction operations.

3.4.3 Dust Control

Dust control methods and procedures must be approved by the Contracting Officer. Treat dust abatement on access roads with applications of calcium chloride, water sprinklers, or similar methods or treatment.

3.5 CONTRACTOR'S TEMPORARY FACILITIES

3.5.1 Safety

Protect the integrity of any installed safety systems or personnel safety devices. If entrance into systems serving safety devices is required, the Contractor must obtain prior approval from the Contracting Officer. If it is temporarily necessary to remove or disable personnel safety devices in order to accomplish contract requirements, provide alternative means of protection prior to removing or disabling any permanently installed safety devices or equipment and obtain approval from the Contracting Officer.

3.5.2 Administrative Field Offices

Provide and maintain administrative field office facilities within the construction area at the designated site. Government office and warehouse facilities will not be available to the Contractor's personnel.

3.5.3 Storage Area

Construct a temporary 1.8 m high chain link fence around trailers and materials. Include plastic strip inserts, colored green, so that visibility through the fence is obstructed. Fence posts may be driven, in lieu of concrete bases, where soil conditions permit. Do not place or store Trailers, materials, or equipment outside the fenced area unless such trailers, materials, or equipment are assigned a separate and distinct storage area by the Contracting Officer away from the vicinity of the construction site but within the installation boundaries. Trailers, equipment, or materials must not be open to public view with the exception of those items which are in support of ongoing work on any given day. Do

not stockpile materials outside the fence in preparation for the next day's work. Park mobile equipment, such as tractors, wheeled lifting equipment, cranes, trucks, and like equipment within the fenced area at the end of each work day.

3.5.4 Appearance of Trailers

a. Trailers utilized by the Contractor for administrative or material storage purposes must present a clean and neat exterior appearance and be in a state of good repair. Trailers which, in the opinion of the Contracting Officer, require exterior painting or maintenance will not be allowed on installation property.

b. Paint using suitable paint and maintain the temporary facilities. Failure to do so will be sufficient reason to require their removal.

3.5.5 Maintenance of Storage Area

a. Keep fencing in a state of good repair and proper alignment. Grassed or unpaved areas, which are not established roadways, will be covered with a layer of gravel as necessary to prevent rutting and the tracking of mud onto paved or established roadways, should the Contractor elect to traverse them with construction equipment or other vehicles; gravel gradation will be at the Contractor's discretion. Mow and maintain grass located within the boundaries of the construction site for the duration of the project. Grass and vegetation along fences, buildings, under trailers, and in areas not accessible to mowers will be edged or trimmed neatly.

3.5.6 Security Provisions

Provide adequate outside security lighting at the Contractor's temporary facilities. The Contractor will be responsible for the security of its own equipment; in addition, the Contractor will notify the appropriate law enforcement agency requesting periodic security checks of the temporary project field office.

3.5.7 Storage Size and Location

The open site available for storage must be confined to the indicated operations area.

3.5.8 Storage in Existing Buildings

The Contractor will be working around existing buildings; the storage of material will not be allowed in the buildings.

3.5.9 Weather Protection of Temporary Facilities and Stored Materials

Take necessary precautions to ensure that roof openings and other critical openings in the building are monitored carefully. Take immediate actions required to seal off such openings when rain or other detrimental weather is imminent, and at the end of each workday. Ensure that the openings are completely sealed off to protect materials and equipment in the building from damage.

3.5.9.1 Building and Site Storm Protection

When a warning of gale force winds is issued, take precautions to minimize danger to persons, and protect the work and nearby Government property. Precautions must include, but are not limited to, closing openings; removing loose materials, tools and equipment from exposed locations; and removing or securing scaffolding and other temporary work. Close openings in the work when storms of lesser intensity pose a threat to the work or any nearby Government property.

3.6 GOVERNMENT FIELD OFFICE

3.6.1 Resident Engineer's Office

Provide the Government Resident Engineer with an office, approximately 19 square meters in floor area, located where directed and providing space heat, electric light and power, and toilet facilities consisting of one lavatory and one water closet complete with connections to water and sewer mains. Provide a mail slot in the door or a lockable mail box mounted on the surface of the door. Include a 1200 by 2400 mm plan table, computer work space a standard size office desk and chair, and telephone. At completion of the project, the office will remain the property of the Contractor and be removed from the site. Utilities willbe connected and disconnected in accordance with local codes and to the satisfaction of the Contracting Officer.

3.6.2 Quality Control Manager Records and Field Office

Provide on the jobsite an office with approximately 9 square meter of useful floor area for the exclusive use of the QC Manager. Provide a weathertight structure with adequate cooling, lighting, ventilation, a 1200 by 2400 mm plan table, a standard size office desk and chair, computer station, and working communications facilities. Provide a door with a cylinder lock and windows with locking hardware. Make utility connections. Locate as directed. File quality control records in the office and make available at all times to the Government. After completion of the work, remove the entire structure from the site.

3.6.3 Trailer-Type Mobile Office

The Contractor may, at its option, furnish and maintain a trailer-type mobile office acceptable to the Contracting Officer and providing as a minimum the facilities specified above. Securely anchor the trailer to the ground at all four corners to guard against movement during high winds.

3.7 PLANT COMMUNICATION

Whenever the Contractor has the individual elements of its plant so located that operation by normal voice between these elements is not satisfactory, the Contractor must install a satisfactory means of communication, such as telephone or other suitable devices and made available for use by Government personnel.

3.8 TEMPORARY PROJECT SAFETY FENCING

As soon as practicable, but not later than 15 days after the date established for commencement of work, furnish and erect temporary project safety fencing at the work site. Maintain the safety fencing during the life of the contract and, upon completion and acceptance of the work, will

become the property of the Contractor and be removed from the work site.

3.9 CLEANUP

Remove construction debris, waste materials, packaging material and the like from the work site daily. Any dirt or mud which is tracked onto paved or surfaced roadways must be cleaned away. Store any salvageable materials resulting from demolition activities within the fenced area described above or at the supplemental storage area. Neatly stack stored materials not in trailers, whether new or salvaged.

3.10 RESTORATION OF STORAGE AREA

Upon completion of the project remove the bulletin board, signs, barricades, haul roads, and any other temporary products from the site. After removal of trailers, materials, and equipment from within the fenced area, remove the fence that will become the property of the Contractor. Restore areas used by the Contractor for the storage of equipment or material, or other use to the original or better condition. Remove gravel used to traverse grassed areas and restore the area to its original condition, including top soil and seeding as necessary.

-- End of Section --

THIS PAGE HAS BEEN INTENTIONALLY LEFT BLANK

SECTION 01 57 19.00 20

TEMPORARY ENVIRONMENTAL CONTROLS
11/11

PART 1 GENERAL

1.1 REFERENCES

The publications listed below form a part of this specification to the extent referenced. The publications are referred to within the text by the basic designation only.

U.S. NATIONAL ARCHIVES AND RECORDS ADMINISTRATION (NARA)

40 CFR 261	Identification and Listing of Hazardous Waste
OEBGD DOD 4715.05-G	Overseas Environmental Baseline Guidance Document - Latest Revision

1.2 DEFINITIONS

1.2.1 Sediment

Soil and other debris that have eroded and have been transported by runoff water or wind.

1.2.2 Solid Waste

Garbage, refuse, debris, sludge, or other discharged material, including solid, liquid, semisolid, or contained gaseous materials resulting from domestic, industrial, commercial, mining, or agricultural operations. Types of solid waste typically generated at construction sites may include:

a. Green waste: The vegetative matter from landscaping, land clearing and grubbing, including, but not limited to, grass, bushes, scrubs, small trees and saplings, tree stumps and plant roots. Marketable trees, grasses and plants that are indicated to remain, be re-located, or be re-used are not included.

b. Surplus soil: Existing soil that is in excess of what is required for this work, including aggregates intended, but not used, for on-site mixing of concrete, mortars and paving. Contaminated soil meeting the definition of hazardous material or hazardous waste is not included.

c. Debris: Non-hazardous solid material generated during the construction, demolition, or renovation of a structure which exceeds 60 mm particle size that is: a manufactured object; plant or animal matter; or natural geologic material (e.g. cobbles and boulders), broken or removed concrete, masonry, and rock asphalt paving; ceramics; roofing paper and shingles. Inert materials may not be reinforced with or contain ferrous wire, rods, accessories and weldments. A mixture of debris and other material such as soil or sludge is also subject to regulation as debris if the mixture is comprised primarily of debris by volume, based on visual inspection.

d. Wood: Dimension and non-dimension lumber, plywood, chipboard, hardboard. Treated and/or painted wood that meets the definition of lead contaminated or lead based contaminated paint is not included.

e. Scrap metal: Scrap and excess ferrous and non-ferrous metals such as reinforcing steel, structural shapes, pipe and wire that are recovered or collected and disposed of as scrap. Scrap metal meeting the definition of hazardous material or hazardous waste is not included.

f. Paint cans: Metal cans that are empty of paints, solvents, thinners and adhesives. If permitted by the paint can label, a thin dry film may remain in the can.

g. Recyclables: Materials, equipment and assemblies such as doors, windows, door and window frames, plumbing fixtures, glazing and mirrors that are recovered and sold as recyclable. Metal meeting the definition of lead contaminated or lead based paint contaminated may not be included as recyclable if sold to a scrap metal company. Paint cans may not be included as recyclable if sold to a scrap metal company.

h. Hazardous Waste: By definition, to be a hazardous waste a material must first meet the definition of a solid waste. Hazardous waste and hazardous debris are special cases of solid waste. They have additional regulatory controls and must be handled separately. They are thus defined separately in this document.

   Material not regulated as solid waste are: nuclear source or byproduct materials regulated under the Federal Atomic Energy Act of 1954 as amended; suspended or dissolved materials in domestic sewage effluent or irrigation return flows, or other regulated point source discharges; regulated air emissions; and fluids or wastes associated with natural gas or crude oil exploration or production.

1.2.3 Hazardous Debris

As defined in Solid Waste paragraph, debris that contains listed hazardous waste (either on the debris surface, or in its interstices, such as pore structure) per OEBGD DOD 4715.05-G; or debris that exhibits a characteristic of hazardous waste per 40 CFR 261.

1.2.4 Chemical Wastes

This includes salts, acids, alkalizes, herbicides, pesticides, and organic chemicals.

1.2.5 Garbage

Refuse and scraps resulting from preparation, cooking, dispensing, and consumption of food.

1.2.6 Hazardous Waste

Any discarded material, liquid, solid, or gas, which meets the definition of hazardous material or is designated hazardous waste by the Environmental Protection Agency or State Hazardous Control Authority as defined in OEBGD DOD 4715.05-G.

1.2.7 Hazardous Materials

Hazardous materials as defined and listed in OEBGD DOD 4715.05-G.

Hazardous material is any material that:

a. Is regulated as a hazardous material per OEBGD DOD 4715.05-G, or

b. Requires a Material Safety Data Sheet (MSDS) per OEBGD DOD 4715.05-G, or

c. During end use, treatment, handling, packaging, storage, transpiration, or disposal meets or has components that meet or have potential to meet the definition of a hazardous waste as defined by the OEBGD DOD 4715.05-G.

Designation of a material by this definition, when separately regulated or controlled by other instructions or directives, does not eliminate the need for adherence to that hazard-specific guidance which takes precedence over this instruction for "control" purposes. Such material include ammunition, weapons, explosive actuated devices, propellants, pyrotechnics, chemical and biological warfare materials, medical and pharmaceutical supplies, medical waste and infectious materials, bulk fuels, radioactive materials, and other materials such as asbestos, mercury, and polychlorinated biphenyls (PCBs). Nonetheless, the exposure may occur incident to manufacture, storage, use and demilitarization of these items.

1.2.8 Waste Hazardous Material (WHM)

Any waste material which because of its quantity, concentration, or physical, chemical, or infectious characteristics may pose a substantial hazard to human health or the environment and which has been so designated. Used oil not containing any hazardous waste, as defined above, falls under this definition.

1.2.9 Oily Waste

Those materials which are, or were, mixed with used oil and have become separated from that used oil. Oily wastes also means materials, including wastewaters, centrifuge solids, filter residues or sludges, bottom sediments, tank bottoms, and sorbents which have come into contact with and have been contaminated by, used oil and may be appropriately tested and discarded in a manner which is in compliance with other State and local requirements.

This definition includes materials such as oily rags, "kitty litter" sorbent clay and organic sorbent material. These materials may be land filled provided that:

a. It is not prohibited in other State regulations or local ordinances

b. The amount generated is "de minimus" (a small amount)

c. It is the result of minor leaks or spills resulting from normal process operations

d. All free-flowing oil has been removed to the practical extent possible

Large quantities of this material, generated as a result of a major spill or in lieu of proper maintenance of the processing equipment, are a solid waste. As a solid waste, a hazardous waste determination must be performed prior to disposal. As this can be an expensive process, it is recommended that this type of waste be minimized through good housekeeping practices and employee education.

1.2.10 Regulated Waste

Those solid wastes that have specific additional OEBGD DOD 4715.05-G, Host Nation or local controls for handling, storage, or disposal.

1.2.11 Class I and II Ozone Depleting Substance (ODS)

Class I ODS is defined in Section 602(a) of The Clean Air Act and includes the following chemicals:

chlorofluorocarbon-11 (CFC-11)
chlorofluorocarbon-12 (CFC-12)
chlorofluorocarbon-13 (CFC-13)
chlorofluorocarbon-111 (CFC-111)
chlorofluorocarbon-112 (CFC-112)
chlorofluorocarbon-113 (CFC-113)
chlorofluorocarbon-114 (CFC-114)
chlorofluorocarbon-115 (CFC-115)
chlorofluorocarbon-211 (CFC-211)
chlorofluorocarbon-212 (CFC-212)
chlorofluorocarbon-213 (CFC-213)
chlorofluorocarbon-214 (CFC-214)
chlorofluorocarbon-215 (CFC-215)
chlorofluorocarbon-216 (CFC-216)
chlorofluorocarbon-217 (CFC-217)
chlorofluorocarbon-500 (CFC-500)
chlorofluorocarbon-502 (CFC-502)
chlorofluorocarbon-503 (CFC-503)

halon-1211
halon-1301
halon-2402
carbon tetrachloride
methyl bromide
methyl chloroform

Class II ODS is defined in Section 602(s) of The Clean Air Act and includes the following chemicals:

hydrochlorofluorocarbon-21 (HCFC-21)
hydrochlorofluorocarbon-22 (HCFC-22)
hydrochlorofluorocarbon-31 (HCFC-31)
hydrochlorofluorocarbon-121 (HCFC-121)
hydrochlorofluorocarbon-122 (HCFC-122)
hydrochlorofluorocarbon-123 (HCFC-123)
hydrochlorofluorocarbon-124 (HCFC-124)
hydrochlorofluorocarbon-131 (HCFC-131)
hydrochlorofluorocarbon-132 (HCFC-132)
hydrochlorofluorocarbon-133 (HCFC-133)
hydrochlorofluorocarbon-141 (HCFC-141)
hydrochlorofluorocarbon-142 (HCFC-142)
hydrochlorofluorocarbon-221 (HCFC-221)
hydrochlorofluorocarbon-222 (HCFC-222)
hydrochlorofluorocarbon-223 (HCFC-223)
hydrochlorofluorocarbon-224 (HCFC-224)
hydrochlorofluorocarbon-225 (HCFC-225)
hydrochlorofluorocarbon-226 (HCFC-226)

hydrochlorofluorocarbon-231 (HCFC-231)
hydrochlorofluorocarbon-232 (HCFC-232)
hydrochlorofluorocarbon-233 (HCFC-233)
hydrochlorofluorocarbon-234 (HCFC-234)
hydrochlorofluorocarbon-235 (HCFC-235)
hydrochlorofluorocarbon-251 (HCFC-251)
hydrochlorofluorocarbon-252 (HCFC-252)
hydrochlorofluorocarbon-253 (HCFC-253)
hydrochlorofluorocarbon-261 (HCFC-261)
hydrochlorofluorocarbon-262 (HCFC-262)
hydrochlorofluorocarbon-271 (HCFC-271)

1.2.12 Universal Waste

The universal waste regulations streamline collection requirements for certain hazardous wastes in the following categories: batteries, pesticides, mercury-containing equipment (e.g., thermostats) and lamps (e.g., fluorescent bulbs). The rule is designed to reduce hazardous waste in the municipal solid waste (MSW) stream by making it easier for universal waste handlers to collect these items and send them for recycling or proper disposal.

1.3 SUBMITTALS

Government approval is required for submittals with a "G" designation; submittals not having a "G" designation are for Contractor Quality Control approval. Submittals with an "S" are for inclusion in the Sustainability Notebook, in conformance to Section 01 33 29 SUSTAINABILITY REPORTING. Submit the following in accordance with Section 01 33 00 SUBMITTAL PROCEDURES:

SD-01 Preconstruction Submittals

Preconstruction Survey; G

Solid Waste Management Plan and Permit; G

Environmental Protection Plan; G

Dirt and Dust Control Plan

SD-06 Test Reports

Contractor Hazardous Material Inventory Log

Hazardous Waste/Debris Management

Laboratory Analysis

SD-07 Certificates

Contractor 40 CFR employee training records; G

ECATTS Certificate of Completion

SD-11 Closeout Submittals

Some of the records listed below are also required as part of other submittals. For the "Records" submittal, maintain on-site a separate three-ring Environmental Records binder and submit at the completion of the project. Make separate parts to the binder corresponding to each of the applicable sub items listed below.

Waste Determination Documentation

Solid Waste Management PermitRegulatory Notifications

1.4 ENVIRONMENTAL PROTECTION REQUIREMENTS

Provide and maintain, during the life of the contract, environmental protection as defined. Plan for and provide environmental protective measures to control pollution that develops during normal construction practice. Plan for and provide environmental protective measures required to correct conditions that develop during the construction of permanent or temporary environmental features associated with the project. Comply with OEBGD DOD 4715.05-G, Host Nationa, and local regulations pertaining to the environment, including water, air, solid waste, hazardous waste and substances, oily substances, and noise pollution.

The Contractor may be required to promptly conduct tests and procedures for the purpose of assessing whether construction operations are in compliance with Applicable Environmental Laws. Analytical work shall be done by qualified laboratories; and where required by law, the laboratories shall be certified.

1.4.1 Environmental Compliance Assessment Training and Tracking System (ECATTS)

The QC Manager is responsible for environmental compliance on projects unless an Environmental Manager is named. The QC Manager (and alternative QC Manager) or Environmental Manager must complete ECATTS training prior to starting respective portions of on-site work under this contract. If personnel changes occur for any of these positions after starting work, replacement personnel must complete ECATTS training within 14 days of assignment to the project

Submit an ECATTS certificate of completion for personnel who have completed the required "Environmental Compliance Assessment Training and Tracking System (ECATTS)" training. This training is web-based and can be accessed from any computer with Internet access using the following instructions.

Register for NAVFAC Environmental Compliance Training and Tracking System, by logging on to http://navfac.ecatts.com/. Obtain the password for registration from the Contracting Officer.

This training has been structured to allow contractor personnel to receive credit under this contract and also to carry forward credit to future contracts. Contractors shall ensure that the QC Manager (and alternate QC Manager) or Environmental Manager review their training plans for new modules or updated training requirements prior to beginning work. Some training modules are tailored for specific State regulatory requirements; therefore, Contractors working in multiple states will be requires to re-take modules tailored to the state where the contract work is being performed.

ECATTS is available for use by all contractor and subcontractor personnel associated with this project. These other personnel are encouraged (but not required) to take the training and may do so at their discretion.

1.4.2 Conformance with the Environmental Management System

Perform work under this contract consistent with the policy and objectives identified in the installation's Environmental Management System (EMS). Perform work in a manner that conforms to objectives and targets, environmental programs and operational controls identified by the EMS. Provide monitoring and measurement information as necessary to address environmental performance relative to environmental, energy, and transportation management goals. In the event an EMS nonconformance or environmental noncompliance associated with the contracted services, tasks, or actions occurs, take corrective and/or preventative actions. In addition, ensure that employees are aware of their roles and responsibilities under the EMS and how these EMS roles and responsibilities affect work performed under the contract.

Ensure that employees receive applicable environmental and occupational health and safety training, and keep up to date on regulatory required specific training for the type of work to be conducted onsite. All on-site Contractor personnel, and their subcontractor personnel, performing tasks that have the potential to cause a significant environmental impact shall be competent on the basis of appropriate education, training or experience. Upon contract award, the Contracting Officer's Representative will notify the installation's EMS coordinator to arrange EMS training. The installation's EMS coordinator will identify training needs associated with environmental aspects and the EMS, and arrange training or take other action to meet these needs. Provide training documentation to the Contracting Officer. The EMS coordinator must retain associated records.

1.5 QUALITY ASSURANCE

1.5.1 Preconstruction Survey

Perform a Preconstruction Survey of the project site with the Contracting Officer, and take photographs showing existing environmental conditions in and adjacent to the site. Submit a report for the record.

1.5.2 Regulatory Notifications

The Contractor is responsible for all regulatory notification requirements in accordance with OEBGD DOD 4715.05-G, Host Nation, and local regulations. In cases where the Navy must also provide public notification (such as stormwater permitting), coordinate with the Contracting Officer. Submit copies of all regulatory notifications to the

Contracting Officer prior to commencement of work activities. Typically, regulatory notifications must be provided for the following (this listing is not all inclusive): demolition, renovation, NPDES defined site work, remediation of controlled substances (asbestos, hazardous waste, lead paint).

1.5.3 Environmental Brief

Attend an environmental brief to be included in the preconstruction meeting. Provide the following information: types, quantities, and use of hazardous materials that will be brought onto the activity; types and quantities of wastes/wastewater that may be generated during the contract. Discuss the results of the Preconstruction Survey at this time.

Prior to initiating any work on site, meet with the Contracting Officer and activity environmental staff to discuss the proposed Environmental Protection Plan. Develop a mutual understanding relative to the details of environmental protection, including measures for protecting natural resources, required reports, required permits, permit requirements, and other measures to be taken.

1.5.4 Environmental Manager

Appoint in writing an Environmental Manager for the project site. The Environmental Manager will be directly responsible for coordinating contractor compliance with OEBGD DOD 4715.05-G, Host Nation, local, and station requirements. The Environmental Manager will ensure compliance with Hazardous Waste Program requirements (including hazardous waste handling, storage, manifesting, and disposal); implement the Environmental Protection Plan; ensure that all environmental permits are obtained, maintained, and closed out; ensure compliance with Storm Water Program Management requirements; ensure compliance with Hazardous Materials (storage, handling, and reporting) requirements; and coordinate any remediation of regulated substances (lead, asbestos, PCB transformers). This can be a collateral position; however the person in this position must be trained to adequately accomplish the following duties: ensure waste segregation and storage compatibility requirements are met; inspect and manage Satellite Accumulation areas; ensure only authorized personnel add wastes to containers; ensure all Contractor personnel are trained in 40 CFR requirements in accordance with their position requirements; coordinate removal of waste containers; and maintain the Environmental Records binder and required documentation, including environmental permits compliance and close-out.

1.5.5 Contractor 40 CFR Employee Training Records

Prepare and maintain employee training records throughout the term of the contract meeting applicable 40 CFR requirements. Submit these training records to the Contracting Officer at the conclusion of the project, unless otherwise directed.

1.6 ENVIRONMENTAL PROTECTION PLAN (EPP)

Prior to initiating any work on site, meet with the Contracting Officer to discuss the proposed Environmental Protection Plan and develop a mutual understanding relative to the details of environmental protection, including measures for protecting natural resources, required reports, and other measures to be taken. The Environmental Protection Plan must incorporate construction related objectives and targets from the

installation's Environmental Management System. Submit the Environmental Protection Plan in the following format and include the elements specified below.

a. Description of the Environmental Protection Plan

(1) General overview and purpose

(a) A brief description of each specific plan required by environmental permit or elsewhere in this contract.

(b) The duties and level of authority assigned to the person(s) on the job site that oversee environmental compliance.

(c) A copy of any standard or project specific operating procedures that will be used to effectively manage and protect the environment on the project site.

(d) Communication and training procedures that will be used to convey environmental management requirements to contractor employees and subcontractors.

(e) Emergency contact information contact information (office phone number, cell phone number, and e-mail address).

(2) General site information

(3) A letter signed by an officer of the firm appointing the Environmental Manager and stating that he/she is responsible for managing and implementing the Environmental Program as described in this contract. Include in this letter the Environmental Manager's authority to direct the removal and replacement of non-conforming work.

b. Management of Natural Resources

(1) Land resources

(2) Replacement of damaged landscape features

(3) Temporary construction

c. Protection of Historical and Archaeological Resources

(1) Objectives

(2) Methods

d. Storm Water Management and Control

(1) Ground cover

(2) Erodible soils

(3) Temporary measures

(a) Mechanical retardation and control of runoff

(4) Effective selection, implementation and maintenance of Best Management Practices (BMPs).

e. Protection of the Environment from Waste Derived from Contractor Operations

(1) Control and disposal of solid and sanitary waste. If Section 01 74 19 CONSTRUCTION AND DEMOLITION WASTE MANAGEMENT is included in the contract, submit the plan required by that section as part of the Environmental Protection Plan.

(2) Control and disposal of hazardous waste (Hazardous Waste Management Section)

This item will consist of the management procedures for all hazardous waste to be generated. The elements of those procedures will coincide with the Activity Hazardous Waste Management Plan. A copy of the Activity Hazardous Waste Management Plan will be provided by the Contracting Officer. As a minimum, include the following:

(a) Procedures to be employed to ensure a written waste determination is made for appropriate wastes which are to be generated;

(b) Sampling/analysis plan;

(c) Methods of hazardous waste accumulation/storage (i.e., in tanks and/or containers);

(d) Management procedures for storage, labeling, transportation, and disposal of waste (treatment of waste is not allowed unless specifically noted);

(e) Management procedures and regulatory documentation ensuring disposal of hazardous waste complies with Land Disposal Restrictions;

(f) Management procedures for recyclable hazardous materials such as lead-acid batteries, used oil, and the like;

(g) Used oil management procedures in accordance with OEBGD DOD 4715.05-G;

(h) Pollution prevention\hazardous waste minimization procedures;

(i) Plans for the disposal of hazardous waste by permitted facilities;

(j) Procedures to be employed to ensure all required employee training records are maintained.

f. Prevention of Releases to the Environment

(1) Procedures to prevent releases to the environment

(2) Notifications in the event of a release to the environment

g. Regulatory Notification and Permits

List what notifications and permit applications must be made. Demonstrate that those permits have been obtained or applied for by including copies of all applicable, environmental permits.

1.6.1 Environmental Protection Plan Review

Within thirty days after the Contract award date, submit the proposed Environmental Protection Plan for review and approval. Commencement of work will not begin until the environmental protection plan has been approved.

PART 2 PRODUCTS

Not Used

PART 3 EXECUTION

3.1 PROTECTION OF NATURAL RESOURCES

Preserve the natural resources within the project boundaries and outside the limits of permanent work. Restore to an equivalent or improved condition upon completion of work. Confine construction activities to within the limits of the work indicated or specified.

Except in areas to be cleared, do not remove, cut, deface, injure, or destroy trees or shrubs without the Contracting Officer's permission. Do not fasten or attach ropes, cables, or guys to existing nearby trees for anchorages unless authorized by the Contracting Officer. Where such use of attached ropes, cables, or guys is authorized, the Contractor will be responsible for any resultant damage.

Protect existing trees which are to remain and which may be injured, bruised, defaced, or otherwise damaged by construction operations. Remove displaced rocks from uncleared areas. By approved excavation, remove trees with 30 percent or more of their root systems destroyed. Remove trees and other landscape features scarred or damaged by equipment operations, and replace with equivalent, undamaged trees and landscape features. Obtain Contracting Officer's approval before replacement.

3.1.1 Erosion and Sediment Control Measures

3.1.1.1 Burnoff

Burnoff of the ground cover is not permitted.

3.1.1.2 Protection of Erodible Soils

Immediately finish the earthwork brought to a final grade, as indicated or specified. Immediately protect the side slopes and back slopes upon completion of rough grading. Plan and conduct earthwork to minimize the duration of exposure of unprotected soils.

3.1.1.3 Temporary Protection of Erodible Soils

Use the following methods to prevent erosion and control sedimentation:

a. Mechanical Retardation and Control of Runoff

Mechanically retard and control the rate of runoff from the construction site. This includes construction of diversion ditches, benches, berms, and use of silt fences and straw bales to retard and divert runoff to protected drainage courses.

3.1.2 Erosion and Sediment Control Inspection Reports

Note erosion control inspection reports may be compiled as part of a stormwater pollution prevention plan inspection reports if applicable.

3.1.3 Stormwater Drainage and Construction Dewatering

There will be no discharge of excavation ground water to the sanitary sewer, storm drains, or to the waters of the Host Nation without prior specific authorization of the Environmental Division in writing. Discharge of hazardous substances will not be permitted under any circumstances.

Construction site runoff will be prevented from entering any storm drain or the waters of the Host Nation directly by the use of straw bales or other method suitable to the Environmental Division. Contractor will provide erosion protection of the surrounding soils.

Construction Dewatering shall not be discharged to the sanitary sewer. If the construction dewatering is noted or suspected of being contaminated, it may only be released to the storm drain system if the discharge is specifically permitted. Authorization for any contaminated groundwater release shall be obtained in advance from the base Environmental Officer. Discharge of hazardous substances will not be permitted under any circumstances.

3.2 HISTORICAL AND ARCHAEOLOGICAL RESOURCES

Carefully protect in-place and report immediately to the Contracting Officer historical and archaeological items or human skeletal remains discovered in the course of work. Upon discovery, notify the Contracting Officer. Stop work in the immediate area of the discovery until directed by the Contracting Officer to resume work. The Government retains ownership and control over historical and archaeological resources.

3.3 SOLID WASTE MANAGEMENT PLAN and PERMIT

Provide to the contracting officer written notification of the quantity of solid waste/debris that is anticipated to be generated by construction. Include in the report the locations where various types of waste will be disposed or recycled. Include letters of acceptance or as applicable, submit one copy of a OEBGD, Host Nation or local Solid Waste Management Permit or license showing such agency's approval of the disposal plan before transporting wastes off Government property.

3.3.1 Control and Management of Solid Wastes

Pick up solid wastes, and place in covered containers which are regularly emptied. Do not prepare or cook food on the project site. Prevent contamination of the site or other areas when handling and disposing of wastes. At project completion, leave the areas clean. Recycling is encouraged and can be coordinated with the Contracting Officer and the

activity recycling coordinator. Remove all solid waste (including non-hazardous debris) from Government property and dispose off-site at an approved landfill. Solid waste disposal off-site must comply with most stringent local, OEBGD, and Host Nation requirements.

Manage spent hazardous material used in construction, including but not limited to, aerosol cans, waste paint, cleaning solvents, contaminated brushes, and used rags, as per environmental law.

3.4 WASTE DETERMINATION DOCUMENTATION

Complete a Waste Determination form (provided at the pre-construction conference) for all contractor derived wastes to be generated. Base the waste determination upon either a constituent listing from the manufacturer used in conjunction with consideration of the process by which the waste was generated, EPA approved analytical data, or laboratory analysis (Material Safety Data Sheets (MSDS) by themselves are not adequate). Attach all support documentation to the Waste Determination form. As a minimum, a Waste Determination form must be provided for the following wastes (this listing is not all inclusive): oil and latex based painting and caulking products, solvents, adhesives, aerosols, petroleum products, and all containers of the original materials.

3.5 POLLUTION PREVENTION/HAZARDOUS WASTE MINIMIZATION

Minimize the use of hazardous materials and the generation of hazardous waste. Include procedures for pollution prevention/ hazardous waste minimization in the Hazardous Waste Management Section of the Environmental Protection Plan. Consult with the activity Environmental Office for suggestions and to obtain a copy of the installation's pollution prevention/hazardous waste minimization plan for reference material when preparing this part of the plan. If no written plan exists, obtain information by contacting the Contracting Officer. Describe the types of the hazardous materials expected to be used in the construction when requesting information.

3.6 WASTE HAZARDOUS MATERIAL (WHM)/HAZARDOUS WASTE (HW) MATERIALS PROHIBITION

No waste hazardous material or hazardous waste shall be disposed of on government property. No hazardous material shall be brought onto government property that does not directly relate to requirements for the performance of this contract. The government is not responsible for disposal of Contractor's waste material brought on the job site and not required in the performance of this contract. The intent of this provision is to dispose of that waste identified as waste hazardous material/hazardous waste as defined herein that was generated as part of this contract and existed within the boundary of the Contract limits and not brought in from offsite by the Contractor. Incidental materials used to support the contract including, but not limited to aerosol cans, waste paint, cleaning solvents, contaminated brushes, rags, clothing, etc. are the responsibility of the Contractor. The list is illustrative rather than inclusive. The Contractor is not authorized to discharge any materials to sanitary sewer, storm drain, or to the river or conduct waste treatment or disposal on government property without written approval of the Contracting Officer.

3.7 HAZARDOUS MATERIAL MANAGEMENT

Include hazardous material control procedures in the Safety Plan. Address procedures and proper handling of hazardous materials, including the appropriate transportation requirements. No hazardous material shall be brought onto government property that does not directly relate to requirements for the performance of this contract. Submit a MSDS and estimated quantities to be used for each hazardous material to the Contracting Officer prior to bringing the material on base. Typical materials requiring MSDS and quantity reporting include, but are not limited to, oil and latex based painting and caulking products, solvents, adhesives, aerosol, and petroleum products. Ensure that hazardous materials are utilized in a manner that will minimize the amount of hazardous waste that is generated. Ensure that all containers of hazardous materials have NFPA labels or their equivalent. Certify that all hazardous materials removed from the site are hazardous materials and do not meet the definition of hazardous waste per OEBGD DOD 4715.05-G.

3.7.1 Contractor Hazardous Material Inventory Log

Submit the "Contractor Hazardous Material Inventory Log"(found at: http://www.wbdg.org/ccb/NAVGRAPH/graphtoc.pdf), which provides information required by (EPCRA Sections 312 and 313) along with corresponding Material Safety Data Sheets (MSDS), to the Contracting Officer at the start and at the end of construction (30 days from final acceptance), and update no later than January 31 of each calendar year during the life of the contract. Keep copies of the MSDS for hazardous materials on site at all times. At the end of the project, provide the Contracting Officer with copies of all of these MSDS, and the maximum quantity of each material that was present at the site at any one time, the dates the material was present, the amount of each material that was used during the project, and how the material was used.

Documentation for any spills/releases, environmental reports or off-site transfers may be requested by the Contracting Officer.

3.8 PETROLEUM PRODUCTS AND REFUELING

Conduct the fueling and lubricating of equipment and motor vehicles in a manner that protects against spills and evaporation. Manage all used oil generated on site in accordance with OEBGD DOD 4715.05-G. Determine if any used oil generated while on-site exhibits a characteristic of hazardous waste. Used oil containing 1000 parts per million of solvents will be considered a hazardous waste and disposed of at Contractor's expense. Used oil mixed with a hazardous waste will also be considered a hazardous waste.

3.8.1 Oily and Hazardous Substances

Prevent oil or hazardous substances from entering the ground, drainage areas, or navigable waters. Surround all temporary fuel oil or petroleum storage tanks with a temporary berm or containment of sufficient size and strength to contain the contents of the tanks, plus 10 percent freeboard for precipitation. The berm will be impervious to oil for 72 hours and be constructed so that any discharge will not permeate, drain, infiltrate, or otherwise escape before cleanup occurs. Provide general secondary containment for oil transfer operations .

3.8.2 Inadvertent Discovery of Petroleum Contaminated Soil or Hazardous Wastes

If petroleum contaminated soil or suspected hazardous waste is found during construction that was not identified in the contract documents, the contractor shall immediately notify the contracting officer. The contractor shall not disturb this material until authorized by the contracting officer.

3.9 FUEL TANKS

Petroleum products and lubricants required to sustain up to 30 days of construction activity may be kept on site. Storage and refilling practices shall comply with OEBGD DOD 4715.05-G. Secondary containment shall be provided and be no less than 110 percent of the tank volume plus five inches of free-board. If a secondary berm is used for containment then the berm shall be impervious to oil for 72 hours and be constructed so that any discharge will not permeate, drain, infiltrate, or otherwise escape before cleanup occurs. Drips pans are required and the tanks must be covered during inclement weather.

3.10 RELEASES/SPILLS OF OIL AND HAZARDOUS SUBSTANCES

Exercise due diligence to prevent, contain, and respond to spills of hazardous material, hazardous substances, hazardous waste, sewage, regulated gas, petroleum, lubrication oil, and other substances regulated by environmental law. Maintain spill cleanup equipment and materials at the work site. In the event of a spill, take prompt, effective action to stop, contain, curtail, or otherwise limit the amount, duration, and severity of the spill/release. In the event of any releases of oil and hazardous substances, chemicals, or gases; immediately (within 15 minutes) notify the Base or Activity Fire Department, the activity's Command Duty Officer, and the Contracting Officer. If the contractor's response is inadequate, the Navy may respond. If this should occur, the contractor will be required to reimburse the government for spill response assistance and analysis.

The Contractor is responsible for verbal and written notifications as required by the Host Nation, OEBGD DOD 4715.05-G, local regulations and Navy Instructions. Spill response will be in accordance with OEBGD DOD 4715.05-G, Host Nation and local regulations. Contain and clean up these spills without cost to the Government. If Government assistance is requested or required, the Contractor will reimburse the Government for such assistance. Provide copies of the written notification and documentation that a verbal notification was made within 20 days.

Maintain spill cleanup equipment and materials at the work site. Clean up all hazardous and non-hazardous (WHM) waste spills. The Contractor shall reimburse the government for all material, equipment, and clothing generated during any spill cleanup. The Contractor shall reimburse the government for all costs incurred including sample analysis materials, equipment, and labor if the government must initiate its own spill cleanup procedures, for Contractor responsible spills, when:

a. The Contractor has not begun spill cleanup procedure within one hour of spill discovery/occurrence, or

b. If, in the government's judgment, the Contractor's spill cleanup is not adequately abating life threatening situation and/or is a threat

to any body of water or environmentally sensitive areas.

3.11 CONTROL AND MANAGEMENT OF HAZARDOUS WASTES

3.11.1 Facility Hazardous Waste Generator Status

Camp Lemonnier is designated as a Large Quantity Generator. All work conducted within the boundaries of this activity must meet the regulatory requirements of this generator designation. Comply with all provisions of OEBGD DOD 4715.05-G, Host Nation, and local regulatory requirements applicable to this generator status regarding training and storage, handling, and disposal of all construction derived wastes.

3.11.2 Hazardous Waste/Debris Management

Identify all construction activities which will generate hazardous waste/debris. Provide a documented waste determination for all resultant waste streams. Hazardous waste/debris will be identified, labeled, handled, stored, and disposed of in accordance with OEBGD DOD 4715.05-G, Host Nation and local regulations.

Hazardous waste will also be managed in accordance with the approved Hazardous Waste Management Section of the Environmental Protection Plan. Store hazardous wastes in approved containers. Hazardous waste generated within the confines of Government facilities will be identified as being generated by the Government.

Prior to removal of any hazardous waste from Government property, all hazardous waste manifests must be signed by activity personnel from the Station Environmental Office. No hazardous waste must be brought onto Government property. Provide to the Contracting Officer a copy of waste determination documentation for any solid waste streams that have any potential to be hazardous waste or contain any chemical constituents listed in OEBGD DOD 4715.05-G. For hazardous wastes spills, verbally notify the Contracting Officer immediately.

3.11.2.1 Regulated Waste Storage/Satellite Accumulation/90 Day Storage Areas

If the work requires the temporary storage/collection of regulated or hazardous wastes, the Contractor will request the establishment of a Regulated Waste Storage Area, a Satellite Accumulation Area, or a 90 Day Storage Area at the point of generation. The Contractor must submit a request in writing to the Contracting Officer providing the following information:

Contract Number	_____
Contractor	_____
Haz/Waste or Regulated Waste POC	_____
Phone Number	_____
Type of Waste	____

Source of Waste	_____
Emergency POC	_____
Phone Number	_____
Location of the Site	_____

(Attach Site Plan to the Request)

Attach a waste determination form. Allow ten working days for processing this request. The designated area where waste is being stored shall be barricaded and a sign identifying as follows:

"DANGER - UNAUTHORIZED PERSONNEL KEEP OUT"

3.11.2.2 Sampling and Analysis of Hazardous Waste (HW)

a. Waste Sampling

Sample waste in accordance with OEBGD DOD 4715.05-G. Each sampled drum or container will be clearly marked with the Contractor's identification number and cross referenced to the chemical analysis performed.

b. Laboratory Analysis

Follow the analytical procedure and methods in accordance with OEBGD DOD 4715.05-G. The Contractor will provide all analytical results and reports performed to the Contracting Officer

c. Analysis Type

Identify waste hazardous material/hazardous waste by analyzing for the following properties as a minimum: ignitability, corrosiveness, total chlorides, BTU value, PCBs, TCLP for heavy metals, and cyanide.

3.11.2.3 Hazardous Waste Disposal

No hazardous, toxic, or universal waste shall be disposed or hazardous material abandoned on government property. And unless otherwise noted in this contract, the government is not responsible for disposal of Contractor generated waste material. The disposal of incidental materials used to accomplish the work including, but not limited to aerosol cans, waste paint, cleaning solvents, contaminated brushes, rags, clothing, etc. are the responsibility of the Contractor. The list is illustrative rather than inclusive.

The Contractor is not authorized to discharge any materials to sanitary sewer, storm drain, or water way or conduct waste treatment or disposal on government property without written approval of the Contracting Officer.

Control of stored waste, packaging, sampling, analysis, and disposal will be determined by the details in the contract. The requirements for jobs in the following paragraphs will be used as the guidelines for disposal of any hazardous waste generated.

a. Responsibilities for Contractor's Disposal

Contractor responsibilities include any generation of WHM/HW requiring Contractor disposal of solid waste or liquid.

(1) Provide all service necessary for the final treatment/disposal of the hazardous material/waste in accordance with all OEBGD DOD 4715.05-G, Host Nation and local regulations, and the terms and conditions of the contract within sixty (60) days after the materials have been generated. These services will include all necessary personnel, labor, transportation, packaging, detailed analysis (if required for disposal, and/or transportation, including manifesting or completing waste profile sheets, equipment, and the compilation of all documentation is required).

(2) Contain all waste in accordance with OEBGD DOD 4715.05-G.

(3) Obtain a representative sample of the material generated for each job done to provide waste stream determination.

(4) Analyze each sample taken and providing analytical results to the Contracting Officer. Provide two copies of the results.

(5) Determine the DOT proper shipping names for all waste (each container requiring disposal) and will demonstrate how this determination is developed and supported by the sampling and analysis requirements contained herein to the Contracting Officer.

Contractor Disposal Turn-In Requirements

For any waste hazardous materials or hazardous waste generated which requires the Contractor to dispose of, the following conditions must be complied with in order to be acceptable for disposal:

(1) Drums compatible with waste contents and drums meet OEBGD DOD 4715.05-G requirements for transportation of materials.

(2) Drums banded to wooden pallets. No more than three (3) 55 gallon drums to a pallet, or two (2) 85 gallon over packs.

(3) Band using 1-1/4 inch minimum band on upper third of drum.

(4) Recovery materials label (provided by Code 106.321) located in middle of drum, filled out to indicate actual volume of material, name of material manufacturer, other vendor information as available.

(5) Always have three (3) to five (5) inches of empty space above volume of material. This space is called 'outage'.

3.12 DUST CONTROL

Keep dust down at all times, including during nonworking periods. Dry power brooming will not be permitted. Instead, use vacuuming, wet mopping, wet sweeping, or wet power brooming. Air blowing will be permitted only for cleaning nonparticulate debris such as steel reinforcing bars. Only wet cutting will be permitted for cutting concrete blocks, concrete, and bituminous concrete. Do not unnecessarily shake

bags of cement, concrete mortar, or plaster.

3.12.1 Dirt and Dust Control Plan

Submit truck and material haul routes along with a plan for controlling dirt, debris, and dust on base roadways. As a minimum, identify in the plan the subcontractor and equipment for cleaning along the haul route and measures to reduce dirt, dust, and debris from roadways.

3.13 NOISE

Make the maximum use of low-noise emission products, as certified by the EPA. Blasting or use of explosives will not be permitted without written permission from the Contracting Officer, and then only during the designated times. Confine pile-driving operations to the period between 8 a.m. and 4 p.m., Monday through Friday, exclusive of holidays, unless otherwise specified.

3.14 MERCURY MATERIALS

Mercury is prohibited in the construction of this facility, unless specified otherwise, and with the exception of mercury vapor lamps and fluorescent lamps. Dumping of mercury-containing materials and devices such as mercury vapor lamps, fluorescent lamps, and mercury switches, in rubbish containers is prohibited. Remove without breaking, pack to prevent breakage, and transport out of the activity in an unbroken condition for disposal as directed. Immediately report to the Environmental Office and the Contracting Officer instances of breakage or mercury spillage. Clean mercury spill area to the satisfaction of the Contracting Officer.

Cleanup of a mercury spill shall not be recycled and shall be managed as a hazardous waste for disposal.

-- End of Section --

SECTION 01 58 00

PROJECT IDENTIFICATION
08/09

PART 1 GENERAL

1.1 REFERENCES

The publications listed below form a part of this specification to the extent referenced. The publications are referred to within the text by the basic designation only.

AMERICAN WOOD PROTECTION ASSOCIATION (AWPA)

AWPA C1	(2003) All Timber Products - Preservative Treatment by Pressure Processes
AWPA C2	(2003) Lumber, Timber, Bridge Ties and Mine Ties - Preservative Treatment by Pressure Processes

1.2 SUBMITTALS

Government approval is required for submittals with a "G" designation; submittals not having a "G" designation are for Contractor Quality Control approval. Submittals with an "S" are for inclusion in the Sustainability Notebook, in conformance to Section 01 33 29 SUSTAINABILITY REPORTING. Submit the following in accordance with Section 01 33 00 SUBMITTAL PROCEDURES:

SD-02 Shop Drawings

Preliminary drawing indicating layout and text content; G

1.3 PROJECT SIGN

Prior to initiating any work on site, provide one project identification sign at the location designated. Construct the sign in accordance with project sign detail, which can be downloaded at: http://www.wbdg.org/ccb/NAVGRAPH/graphtoc.pdf. Maintain sign throughout the life of the project. Upon completion of the project, remove the sign from the site.

1.3.1 Project Identification Signboard (Navy)

A project identification signboard shall be provided in accordance with attached Plates 1, 3, and 4. Provide preliminary drawing indicating layout and text content.The signboard shall be provided at a conspicuous location on the job site where directed by the Contracting Officer.

a. The field of the sign shall consist of a 1200 by 2400 mm sheet of grade B-B medium density overlaid exterior plywood.

b. Lumber shall be B or better Southern pine, pressure-preservative treated in accordance with AWPA C1 and AWPA C2. Nails shall be aluminum or galvanized steel.

c. The entire signboard and supports shall be given one coat of exterior alkyd primer and two coats of exterior alkyd enamel paint. The lettering and sign work shall be performed by a skilled sign painter using paint known in the trade as bulletin colors. The colors, lettering sizes, and lettering styles shall be as indicated. Where preservative-treated lumber is required, utilize only cured pressure-treated wood which has had the chemicals leached from the surface of the wood prior to painting.

d. Use spray applied automotive quality high gloss acrylic white enamel paint as background for the NAVFAC logo. NAVFAC logo shall be an applied 0.0508 mm film sticker/decal with either transparent or white background or paint the logo by stencil onto the sign. The weather resistant sticker/decal film shall be rated for a minimum of 2-year exterior vertical exposure. The self-adhering sticker shall be mounted to the sign with pressure sensitive, permanent acrylic adhesive. Shop cut sticker/decal to rectangular shape and provide pull-off backing sheet on adhesive side of design sticker for shipping.

e. Sign paint colors (manufacturer's numbers/types listed below for color identification only)

(1) Blue = To match dark blue color in the NAVFAC logo.

(2) White = To match Brilliant White color in the NAVFAC logo.

f. NAVFAC logo must retain proportions and design integrity. NAVFAC logos in electronic format may be obtained from the NAVFAC web portal via the following link: https://portal.navfac.navy.mil/portal/page?_pageid=181,3465071&_dad=portal&_schema Use the following to choose color values for the paint to be used:

(1) Dark Blue = equivalent to CMYK values 100, 72, 0, 8 .

(2) Light Blue = equivalent to CMYK values 69, 34, 0, 0.

(3) Cyan = equivalent to CMYK values 100, 9, 0, 6.

(4) Yellow = equivalent to CMYK values 0.9,94, 0.

PART 2 PRODUCTS

Not Used

PART 3 EXECUTION

Not Used

-- End of Section --

VERIFY W/ CONTRACTING OFFICER IF PROJECT IS AN ARRA PROJECT. FOR ARRA PROJECTS, ADD SIGNAGE AT TOP OF SIGN. SEE PLATES 8 AND 9 FOR SIGNAGE AND DETAILS.

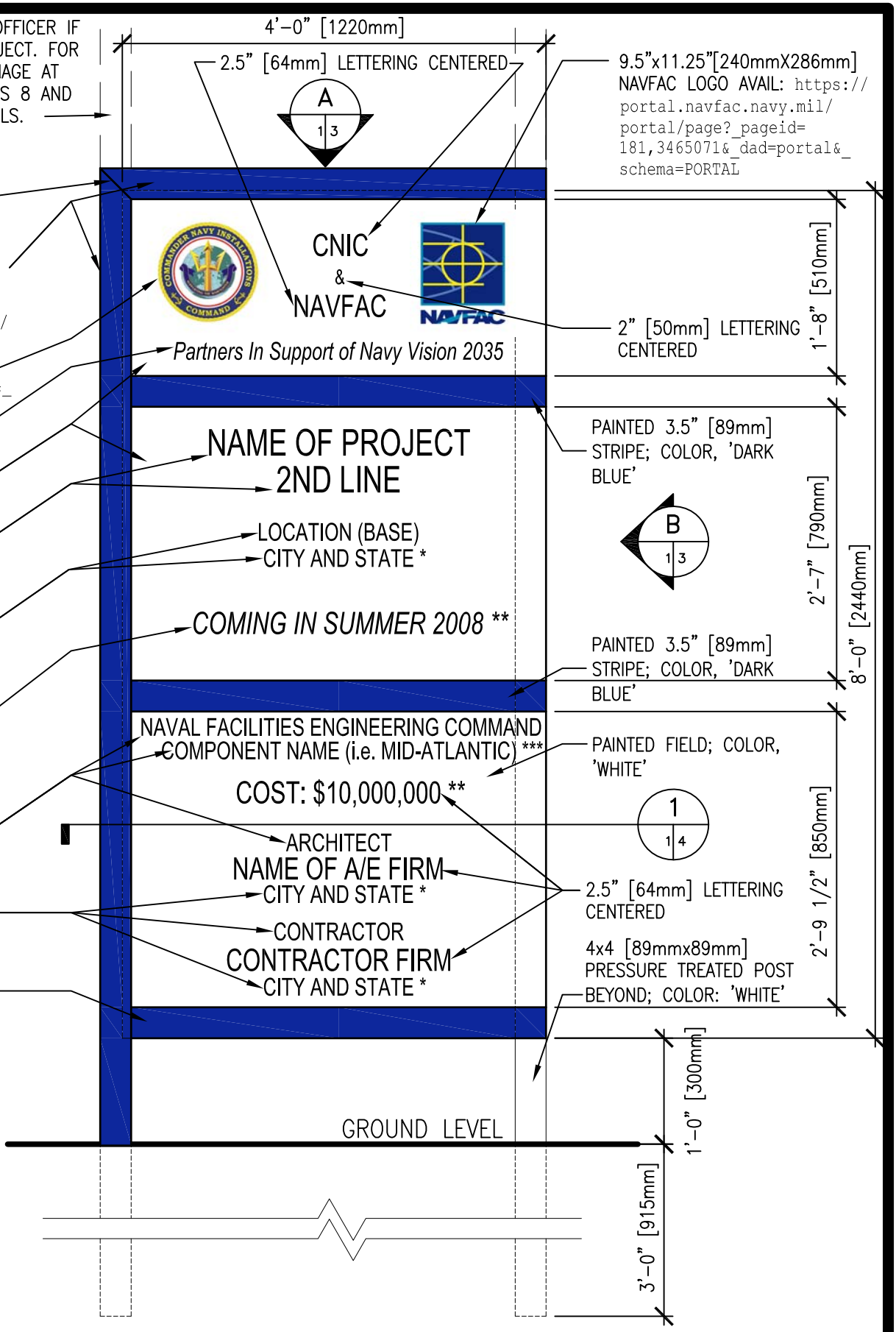

NOTES:

1. PAINT ALL OTHER WOOD SURFACES WITH ONE COAT EXT. PRIMER AND TWO COATS GLOSS WHITE ENAMEL.
2. ALL LETTERING SHALL BE EVENLY SPACED.
3. LETTER STYLE, 'ARIAL', COLOR 'DARK BLUE'. TYPICAL FOR ALL LETTERING.

*–ABBREVIATE STATE
**–CONFIRM USE WITH CONTRACTING OFFICER
***–VERIFY NAME WITH CONTRACTING OFFICER.

PROJECT IDENTIFICATION SIGNBOARD

SCALE: 3/4" = 1'-0"

PLATE 1

THIS PAGE HAS BEEN INTENTIONALLY LEFT BLANK

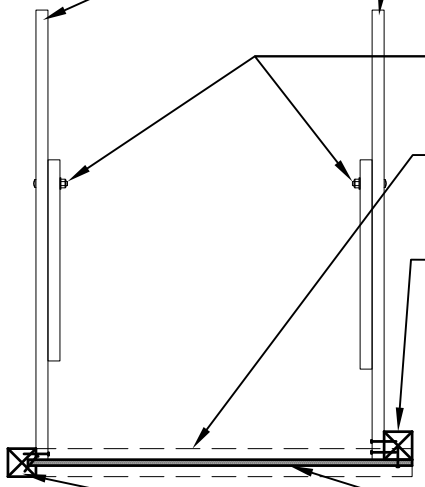

A 1,2 3

TOP VIEW

SCALE: 1/2" = 1'-0"

NOTES:
1. POSTS AND BRACES SHALL BE PRESSURE TREATED.
2. ALL FASTENERS SHALL BE ZINC COATED.
3. BRACING IS REQUIRED IN ALL SOIL CONDITIONS AND HIGH WIND ENVIRONMENTS.

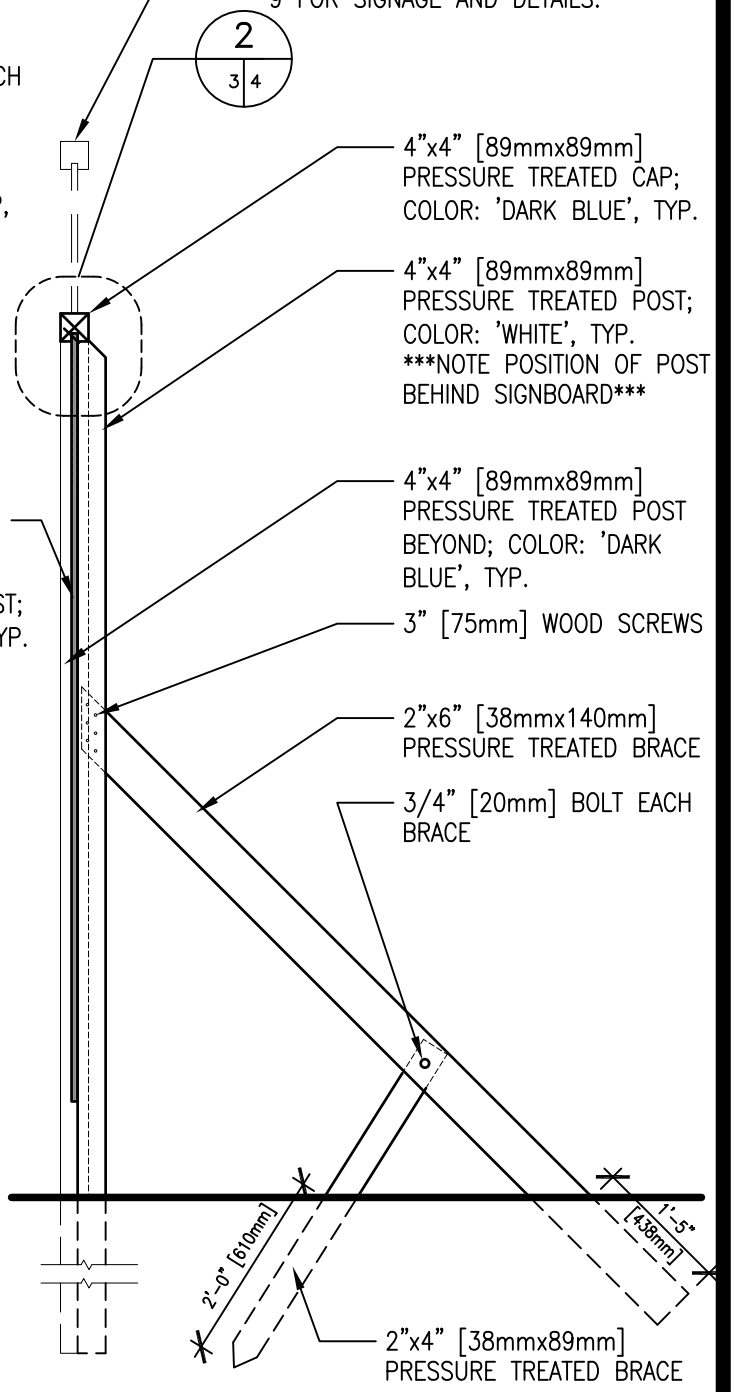

B 1,2 3

SIDE VIEW

SCALE: 1/2" = 1'-0"

PROJECT IDENTIFICATION SIGNBOARD SUPPORT DETAILS

PLATE 3

THIS PAGE HAS BEEN INTENTIONALLY LEFT BLANK

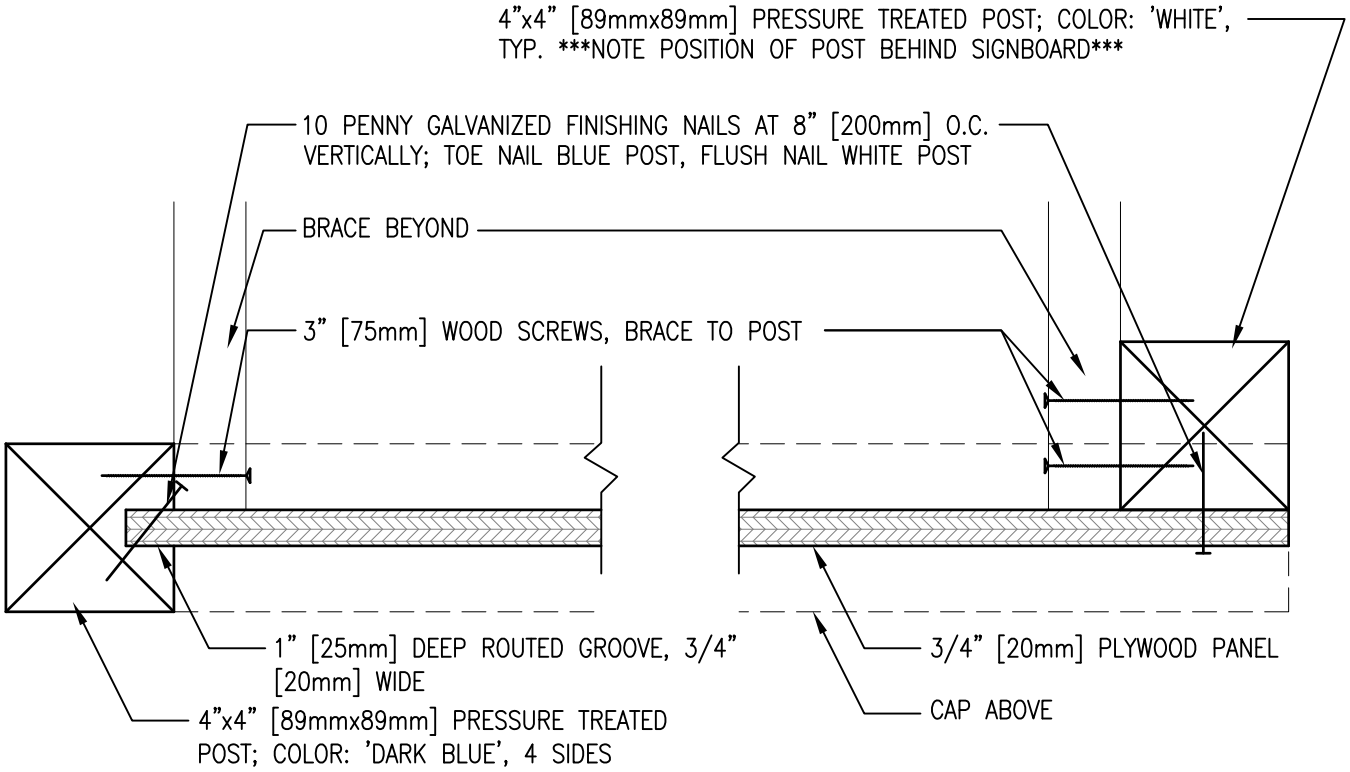

1 PLAN SECTION

1,2 | 4

SCALE: 3" = 1'-0"

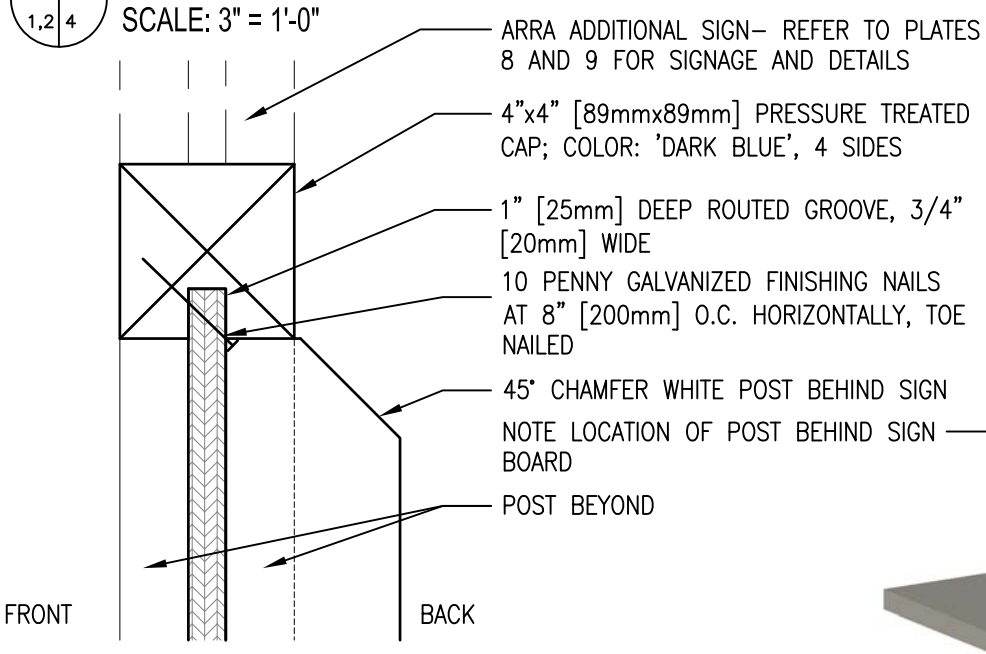

2 SECTION AT TOP

1,2 | 4

SCALE: 3" = 1'-0"

3 ISO VIEW

2 | 4

SCALE: NONE

PROJECT IDENTIFICATION SIGNBOARD SECTIONS

PLATE 4

THIS PAGE HAS BEEN INTENTIONALLY LEFT BLANK

SECTION 01 74 19

CONSTRUCTION AND DEMOLITION WASTE MANAGEMENT
01/07

PART 1 GENERAL

1.1 REFERENCES

The publications listed below form a part of this specification to the extent referenced. The publications are referred to within the text by the basic designation only.

U.S. GREEN BUILDING COUNCIL (USGBC)

LEED BD+C	(2009; R 2010) Leadership in Energy and Environmental Design(tm) Building Design and Construction (LEED-NC)

1.2 GOVERNMENT POLICY

Government policy is to apply sound environmental principles in the design, construction and use of facilities. As part of the implementation of that policy: (1) practice efficient waste management when sizing, cutting, and installing products and materials and (2) use all reasonable means to divert construction and demolition waste from landfills and incinerators and to facilitate their recycling or reuse. Divert a minimum of 75 percent by weight of total project solid waste from the landfill.

1.3 MANAGEMENT

Develop and implement a waste management program. Take a pro-active, responsible role in the management of construction and demolition waste and require all subcontractors, vendors, and suppliers to participate in the effort. The Environmental Manager, as specified in Section 01 57 19.00 20 Temporary Environmental Controls, is responsible for instructing workers and overseeing and documenting results of the Waste Management Plan for the project. Construction and demolition waste includes products of demolition or removal, excess or unusable construction materials, packaging materials for construction products, and other materials generated during the construction process but not incorporated into the work. In the management of waste, consider the availability of viable markets, the condition of the material, the ability to provide the material in suitable condition and in a quantity acceptable to available markets, and time constraints imposed by internal project completion mandates. Implement any special programs involving rebates or similar incentives related to recycling of waste. Revenues or other savings obtained for salvage, or recycling accrue to the Contractor. Appropriately permit firms and facilities used for recycling, reuse, and disposal for the intended use to the extent required by federal, state, and local regulations. Also, provide on-site instruction of appropriate separation, handling, recycling, salvage, reuse, and return methods to be used by all parties at the appropriate stages of the project.

1.4 SUBMITTALS

Government approval is required for submittals with a "G" designation;

submittals not having a "G" designation are for Contractor Quality Control approval. Submittals with an "S" are for inclusion in the Sustainability Notebook, in conformance to Section 01 33 29 SUSTAINABILITY REPORTING. Submit the following in accordance with Section 01 33 00 SUBMITTAL PROCEDURES:

SD-01 Preconstruction Submittals

Waste Management Plan; G;

SD-11 Closeout Submittals

Records;

1.5 MEETINGS

Conduct Construction Waste Management meetings. After award of the Contract and prior to commencement of work, schedule and conduct a meeting with the Contracting Officer to discuss the proposed Waste Management Plan and to develop a mutual understanding relative to the details of waste management. The requirements for this meeting may be fulfilled during the coordination and mutual understanding meeting outlined in Section 01 45 00.00 20 QUALITY CONTROL. At a minimum, discuss environmental and waste management goals and issues at the following additional meetings:

a. Pre-bid meeting.

b. Preconstruction meeting.

c. Regular QC meetings.

d. Work safety meetings.

1.6 WASTE MANAGEMENT PLAN

Submit a waste management plan within 15 days after contract award and not less than 10 days before the preconstruction meeting. The plan demonstrates how to meet the the project waste diversion goal. Also, include the following in the plan:

a. Name of individuals on the Contractor's staff responsible for waste prevention and management.

b. Actions that will be taken to reduce solid waste generation, including coordination with subcontractors to ensure awareness and participation.

c. Description of the regular meetings to be held to address waste management.

d. Description of the specific approaches to be used in recycling/reuse of the various materials generated, including the areas on site and equipment to be used for processing, sorting, and temporary storage of wastes.

e. Characterization, including estimated types and quantities, of the waste to be generated.

f. Name of landfill and/or incinerator to be used and the estimated costs for use, assuming that there would be no salvage or recycling on the

project.

g. Identification of local and regional reuse programs, including non-profit organizations such as schools, local housing agencies, and organizations that accept used materials such as materials exchange networks and Habitat for Humanity. Include the name, location, and phone number for each reuse facility to be used, and provide a copy of the permit or license for each facility.

h. List of specific waste materials that will be salvaged for resale, salvaged and reused on the current project, salvaged and stored for reuse on a future project, or recycled. Identify the recycling facilities by name, location, and phone number, including a copy of the permit or license for each facility.

i. Identification of materials that cannot be recycled/reused with an explanation or justification, to be approved by the Contracting Officer.

j. Description of the means by which any waste materials identified in item (h) above will be protected from contamination.

k. Description of the means of transportation of the recyclable materials (whether materials will be site-separated and self-hauled to designated centers, or whether mixed materials will be collected by a waste hauler and removed from the site).

l. Anticipated net cost savings determined by subtracting Contractor program management costs and the cost of disposal from the revenue generated by sale of the materials and the incineration and/or landfill cost avoidance.

Revise and resubmit Plan as required by the Contracting Officer. Approval of Contractor's Plan will not relieve the Contractor of responsibility for compliance with applicable environmental regulations or meeting project cumulative waste diversion requirement. Distribute copies of the Waste Management Plan to each subcontractor, the Quality Control Manager, and the Contracting Officer.

1.7 RECORDS

Maintain records to document the quantity of waste generated; the quantity of waste diverted through sale, reuse, or recycling; and the quantity of waste disposed by landfill or incineration. Quantities may be measured by weight or by volume, but must be consistent throughout. List each type of waste separately noting the disposal or diversion date. Identify the landfill, recycling center, waste processor, or other organization used to process or receive the solid waste. Provide explanations for any waste not recycled or reused. With each application for payment, submit updated documentation for solid waste disposal and diversion, and submit manifests, weight tickets, receipts, and invoices specifically identifying the project and waste material. Make the records available to the Contracting Officer during construction, and include in the Sustainability Notebook a copy of the records.

Demolition accomplished by other parties on this project site count toward the project's total waste diversion cumulative score for LEED BD+C and for sustainability requirements. Information on the quantity and disposition of these materials will be provided by the Contracting Officer. Include

this data in records, annotated to indicate that it was accomplished by another party.

1.8 COLLECTION

Separate, store, protect, and handle at the site identified recyclable and salvageable waste products in a manner that maximizes recyclability and salvagability of identified materials. Provide the necessary containers, bins and storage areas to facilitate effective waste management and clearly and appropriately identify them. Provide materials for barriers and enclosures around recyclable material storage areas which are nonhazardous and recyclable or reusable. Locate out of the way of construction traffic. Provide adequate space for pick-up and delivery and convenience to subcontractors. Recycling and waste bin areas are to be kept neat and clean, and handle recyclable materials to prevent contamination of materials from incompatible products and materials. Clean contaminated materials prior to placing in collection containers. Use cleaning materials that are nonhazardous and biodegradable. Handle hazardous waste and hazardous materials in accordance with applicable regulations and coordinate with Section 01 57 19.00 20 TEMPORARY ENVIRONMENTAL CONTROLS. Separate materials by one of the following methods:

1.8.1 Source Separated Method.

Separate waste products and materials that are recyclable from trash and sorted as described below into appropriately marked separate containers and then transported to the respective recycling facility for further processing. Deliver materials in accordance with recycling or reuse facility requirements (e.g., free of dirt, adhesives, solvents, petroleum contamination, and other substances deleterious to the recycling process). Separate materials into the following category types as appropriate to the project waste and to the available recycling and reuse programs in the project area:

a. Land clearing debris.

b. Asphalt.

c. Concrete and masonry.

d. Metal (e.g. banding, stud trim, ductwork, piping, rebar, roofing, other trim, steel, iron, galvanized, stainless steel, aluminum, copper, zinc, lead brass, bronze).

    (1) Ferrous.

    (2) Non-ferrous.

e. Wood (nails and staples allowed).

f. Debris.

g. Glass (colored glass allowed).

h. Paper.

    (1) Bond.

(2) Newsprint.

(3) Cardboard and paper packaging materials.

i. Plastic.

Type	
1	Polyethylene Terephthalate (PET, PETE)
2	High Density Polyethylene (HDPE)
3	Vinyl (Polyvinyl Chloride or PVC)
4	Low Density Polyethylene (LDPE)
5	Polypropylene (PP)
6	Polystyrene (PS)
7.	Other. Use of this code indicates that the package in question is made with a resin other than the six listed above, or is made of more than one resin listed above, and used in a multi-layer combination.

j. Gypsum.

k. Non-hazardous paint and paint cans.

l. Carpet.

m. Ceiling tiles.

n. Insulation.

o. Beverage containers.

1.8.2 Co-Mingled Method.

Place waste products and recyclable materials into a single container and then transport to a recycling facility where the recyclable materials are sorted and processed.

1.8.3 Other Methods.

Other proposed methods may be used when approved by the Contracting Officer.

1.9 DISPOSAL

Control accumulation of waste materials and trash. Recycle or dispose of collected materials off-site at intervals approved by the Contracting Officer and in compliance with waste management procedures. Except as otherwise specified in other sections of the specifications, dispose of in accordance with the following:

1.9.1 Reuse.

Give first consideration to salvage for reuse since little or no re-processing is necessary for this method, and less pollution is created when items are reused in their original form. Coordinate reuse with the Contracting Officer.

1.9.2 Recycle.

Recycle waste materials not suitable for reuse, but having value as being recyclable. Recycle all fluorescent lamps, HID lamps, and mercury-containing thermostats removed from the site. Arrange for timely pickups from the site or deliveries to recycling facilities in order to prevent contamination of recyclable materials.

1.9.3 Waste.

Dispose of materials with no practical use or economic benefit to waste-to-energy plants where available. As the last choice, dispose of materials at a landfill or incinerator.

1.9.4 Return

Set aside and protect misdelivered and substandard products and materials and return to supplier for credit.

PART 2 PRODUCTS

Not used.

PART 3 EXECUTION

Not used. -- End of Section --

SECTION 01 78 00

CLOSEOUT SUBMITTALS
08/11

PART 1 GENERAL

1.1 REFERENCES

The publications listed below form a part of this specification to the extent referenced. The publications are referred to within the text by the basic designation only.

ASTM INTERNATIONAL (ASTM)

ASTM E1971	(2005; R 2011) Stewardship for the Cleaning of Commercial and Institutional Buildings

GREEN SEAL (GS)

GS-37	(2012) Cleaning Products for Industrial and Institutional Use

U.S. DEPARTMENT OF DEFENSE (DOD)

FC 1-300-09N	(2014) Navy and Marine Corps Design Procedures
UFC 1-300-08	(2009, with Change 2) Criteria for Transfer and Acceptance of DoD Real Property

1.2 DEFINITIONS

1.2.1 As-Built Drawings

As-built drawings are developed and maintained by the Contractor and depict actual conditions, including deviations from the Contract Documents. These deviations and additions may result from coordination required by, but not limited to: contract modifications; official responses to Contractor submitted Requests for Information; direction from the Contracting Officer; designs which are the responsibility of the Contractor, and differing site conditions. Maintain the as-builts throughout construction as red-lined hard copies on site. As-built drawings are further defined in NFAS 5252.236-9310. These files serve as the basis for the creation of the record drawings.

1.2.2 Record Drawings

The record drawings are the final compilation of actual conditions reflected in the as-built drawings.

1.3 SOURCE DRAWING FILES

Request the full set of electronic drawings, in the source format, for Record Drawing preparation, after award and at least 30 days prior to

required use.

1.3.1 Terms and Conditions

Data contained on these electronic files must not be used for any purpose other than as a convenience in the preparation of construction data for the referenced project. Any other use or reuse shall be at the sole risk of the Contractor and without liability or legal exposure to the Government. The Contractor must make no claim and waives to the fullest extent permitted by law, any claim or cause of action of any nature against the Government, its agents or sub consultants that may arise out of or in connection with the use of these electronic files. The Contractor must, to the fullest extent permitted by law, indemnify and hold the Government harmless against all damages, liabilities or costs, including reasonable attorney's fees and defense costs, arising out of or resulting from the use of these electronic files.

These electronic CAD drawing files are not construction documents. Differences may exist between the CAD files and the corresponding construction documents. The Government makes no representation regarding the accuracy or completeness of the electronic CAD files, nor does it make representation to the compatibility of these files with the Contractor hardware or software. In the event that a conflict arises between the signed and sealed construction documents prepared by the Government and the furnished Source drawing files, the signed and sealed construction documents govern. The Contractor is responsible for determining if any conflict exists. Use of these Source Drawing files does not relieve the Contractor of duty to fully comply with the contract documents, including and without limitation, the need to check, confirm and coordinate the work of all contractors for the project. If the Contractor uses, duplicates or modifies these electronic source drawing files for use in producing construction data related to this contract, remove all previous indicia of ownership (seals, logos, signatures, initials and dates).

1.4 SUBMITTALS

Government approval is required for submittals with a "G" designation; submittals not having a "G" designation are for Contractor Quality Control approval. Submittals with an "S" are for inclusion in the Sustainability Notebook, in conformance to Section 01 33 29 SUSTAINABILITY REPORTING. Submit the following in accordance with Section 01 33 00 SUBMITTAL PROCEDURES:

SD-03 Product Data

Warranty Management Plan
Warranty Tags
Final Cleaning
Spare Parts Data

SD-08 Manufacturer's Instructions

Preventative Maintenance
Condition Monitoring (Predictive Testing)
Inspection
Posted Instructions

SD-10 Operation and Maintenance Data

Operation and Maintenance Manuals; G

SD-11 Closeout Submittals

As-Built Drawings; G
Record Drawings; G

Interim DD FORM 1354; G
Checklist for DD FORM 1354; G
NAVFAC Sustainable & Energy Data Record Card; G

1.5 SPARE PARTS DATA

Submit two copies of the Spare Parts Data list.

a. Indicate manufacturer's name, part number, nomenclature, and stock level required for maintenance and repair. List those items that may be standard to the normal maintenance of the system.

1.6 WARRANTY MANAGEMENT

1.6.1 Warranty Management Plan

Develop a warranty management plan which contains information relevant to the clause Warranty of Construction. At least 30 days before the planned pre-warranty conference, submit one set of the warranty management plan. Include within the warranty management plan all required actions and documents to assure that the Government receives all warranties to which it is entitled. The plan must be in narrative form and contain sufficient detail to render it suitable for use by future maintenance and repair personnel, whether tradesmen, or of engineering background, not necessarily familiar with this contract. The term "status" as indicated below must include due date and whether item has been submitted or was accomplished. Warranty information made available during the construction phase must be submitted to the Contracting Officer for approval prior to each monthly pay estimate. Assemble approved information in a binder and turn over to the Government upon acceptance of the work. The construction warranty period will begin on the date of project acceptance and continue for the full product warranty period. A joint 4 month and 9 month warranty inspection will be conducted, measured from time of acceptance, by the Contractor, Contracting Officer and the Customer Representative. Include within the warranty management plan , but not limited to, the following:

a. Roles and responsibilities of all personnel associated with the warranty process, including points of contact and telephone numbers within the organizations of the Contractors, subContractors, manufacturers or suppliers involved.

b. Furnish with each warranty the name, address, and telephone number of each of the guarantor's representatives nearest to the project location.

c. Listing and status of delivery of all Certificates of Warranty for extended warranty items, to include roofs, HVAC balancing, pumps, motors, transformers, and for all commissioned systems such as fire protection and alarm systems, sprinkler systems, lightning protection systems, etc.

d. A list for each warranted equipment, item, feature of construction or system indicating:

(1) Name of item.
(2) Model and serial numbers.
(3) Location where installed.
(4) Name and phone numbers of manufacturers or suppliers.
(5) Names, addresses and telephone numbers of sources of spare parts.
(6) Warranties and terms of warranty. Include one-year overall warranty of construction, including the starting date of warranty of construction. Items which have extended warranties must be indicated with separate warranty expiration dates.
(7) Cross-reference to warranty certificates as applicable.
(8) Starting point and duration of warranty period.
(9) Summary of maintenance procedures required to continue the warranty in force.
(10) Cross-reference to specific pertinent Operation and Maintenance manuals.
(11) Organization, names and phone numbers of persons to call for warranty service.
(12) Typical response time and repair time expected for various warranted equipment.

e. The plans for attendance at the 4 and 9 month post-construction warranty inspections conducted by the Government.

f. Procedure and status of tagging of all equipment covered by extended warranties.

g. Copies of instructions to be posted near selected pieces of equipment where operation is critical for warranty and/or safety reasons.

1.6.2 Performance Bond

The Performance Bond must remain effective throughout the construction period.

a. In the event the Contractor fails to commence and diligently pursue any construction warranty work required, the Contracting Officer will have the work performed by others, and after completion of the work, will charge the remaining construction warranty funds of expenses incurred by the Government while performing the work, including, but not limited to administrative expenses.

b. In the event sufficient funds are not available to cover the construction warranty work performed by the Government at the Contractor's expense, the Contracting Officer will have the right to recoup expenses from the bonding company.

c. Following oral or written notification of required construction warranty repair work, respond in a timely manner. Written verification will follow oral instructions. Failure to respond will be cause for the Contracting Officer to proceed against the Contractor.

1.6.3 Pre-Warranty Conference

Prior to contract completion, and at a time designated by the Contracting Officer, meet with the Contracting Officer to develop a mutual

understanding with respect to the requirements of this section. Communication procedures for Contractor notification of construction warranty defects, priorities with respect to the type of defect, reasonable time required for Contractor response, and other details deemed necessary by the Contracting Officer for the execution of the construction warranty will be established/reviewed at this meeting. In connection with these requirements and at the time of the Contractor's quality control completion inspection, furnish the name, telephone number and address of a licensed and bonded company which is authorized to initiate and pursue construction warranty work action on behalf of the Contractor. This point of contact will be located within the local service area of the warranted construction, be continuously available, and be responsive to Government inquiry on warranty work action and status. This requirement does not relieve the Contractor of any of its responsibilities in connection with other portions of this provision.

1.6.4 Warranty Tags

At the time of installation, tag each warranted item with a durable, oil and water resistant tag approved by the Contracting Officer. Attach each tag with a copper wire and spray with a silicone waterproof coating. Also, submit two record copies of the warranty tags showing the layout and design. The date of acceptance and the QC signature must remain blank until the project is accepted for beneficial occupancy. Show the following information on the tag.

Type of product/material	
Model number	
Serial number	
Contract number	
Warranty period from/to	
Inspector's signature	
Construction Contractor	
Address	
Telephone number	
Warranty contact	
Address	
Telephone number	

Warranty response time priority code	
WARNING - PROJECT PERSONNEL TO PERFORM ONLY OPERATIONAL MAINTENANCE DURING THE WARRANTY PERIOD.	

PART 2 PRODUCTS

PART 3 EXECUTION

3.1 AS-BUILT DRAWINGS

Provide and maintain As-Built Drawings in accordance with NFAS 5252.236-9310. Submit As-Built Drawings 30 days prior to Beneficial Occupancy Date(BOD).

3.1.1 Markup Guidelines

Make comments and markup the drawings complete without reference to letters, memos, or materials that are not part of the As-Built drawing. Show what was changed, how it was changed, where items(s) were relocated and change related details. These working as-built markup prints must be neat, legible and accurate as follows:

a. Use base colors of red, green, and blue. Color code for changes as follows:

   (1) Special (Blue) - Items requiring special information, coordination, or special detailing or detailing notes.

   (2) Deletions (Red) - Over-strike deleted graphic items (lines), lettering in notes and leaders.

   (3) Additions (Green) - Added items, lettering in notes and leaders.

b. Provide a legend if colors other than the "base" colors of red, green, and blue are used.

c. Add and denote any additional equipment or material facilities, service lines, incorporated under As-Built Revisions if not already shown in legend.

d. Use frequent written explanations on markup drawings to describe changes. Do not totally rely on graphic means to convey the revision.

e. Use legible lettering and precise and clear digital values when marking prints. Clarify ambiguities concerning the nature and application of change involved.

f. Wherever a revision is made, also make changes to related section views, details, legend, profiles, plans and elevation views, schedules, notes and call out designations, and mark accordingly to avoid conflicting data on all other sheets.

g. For deletions, cross out all features, data and captions that relate to that revision.

h. For changes on small-scale drawings and in restricted areas, provide large-scale inserts, with leaders to the applicable location.

i. Indicate one of the following when attaching a print or sketch to a markup print:

1) Add an entire drawing to contract drawings

2) Change the contract drawing to show

3) Provided for reference only to further detail the initial design.

j. Incorporate all shop and fabrication drawings into the markup drawings.

3.1.2 As-Built Drawings Content

Show on the as-built drawings, but not limited to, the following information:

a. The actual location, kinds and sizes of all sub-surface utility lines. In order that the location of these lines and appurtenances may be determined in the event the surface openings or indicators become covered over or obscured, show by offset dimensions to two permanently fixed surface features the end of each run including each change in direction on the record drawings. Locate valves, splice boxes and similar appurtenances by dimensioning along the utility run from a reference point. Also record the average depth below the surface of each run.

b. The location and dimensions of any changes within the building structure.

c. Layout and schematic drawings of electrical circuits and piping.

d. Correct grade, elevations, cross section, or alignment of roads, earthwork, structures or utilities if any changes were made from contract plans.

e. Changes in details of design or additional information obtained from working drawings specified to be prepared and/or furnished by the Contractor; including but not limited to shop drawings, fabrication, erection, installation plans and placing details, pipe sizes, insulation material, dimensions of equipment foundations, etc.

f. The topography, invert elevations and grades of drainage installed or affected as part of the project construction.

g. Changes or Revisions which result from the final inspection.

h. Where contract drawings or specifications present options, show only the option selected for construction on the working as-built markup drawings.

i. If borrow material for this project is from sources on Government property, or if Government property is used as a spoil area, furnish a contour map of the final borrow pit/spoil area elevations.

j. Systems designed or enhanced by the Contractor, such as HVAC controls, fire alarm, fire sprinkler, and irrigation systems.

k. Changes in location of equipment and architectural features.

j. Modifications (include within change order price the cost to change working as-built markup drawings to reflect modifications) and compliance with FC 1-300-09N procedures.

l. Actual location of anchors, construction and control joints, etc., in concrete.

m. Unusual or uncharted obstructions that are encountered in the contract work area during construction.

n. Location, extent, thickness, and size of stone protection particularly where it will be normally submerged by water.

3.2 RECORD DRAWINGS

Prepare and provide Record Drawings in accordance with FC 1-300-09N. Provide 2 copies of Record Drawings on two separate CDs or DVDs 30 days after BOD.

3.3 OPERATION AND MAINTENANCE MANUALS

Provide project operation and maintenance manuals as specified in Section 01 78 23 OPERATION AND MAINTENANCE MANUALS.

3.4 CLEANUP

Provide final cleaning in accordance with ASTM E1971 and submit two copies of the listing of completed final clean-up items. Leave premises "broom clean." Comply with GS-37 for general purpose cleaning and bathroom cleaning. Use only nonhazardous cleaning materials, including natural cleaning materials, in the final cleanup. Clean interior and exterior glass surfaces exposed to view; remove temporary labels, stains and foreign substances; polish transparent and glossy surfaces; vacuum carpeted and soft surfaces. Clean equipment and fixtures to a sanitary condition. Replace filters of operating equipment and comply with the Indoor Air Quality (IAQ) Management Plan. Clean debris from roofs, gutters, downspouts and drainage systems. Sweep paved areas and rake clean landscaped areas. Remove waste and surplus materials, rubbish and construction facilities from the site. Recycle, salvage, and return construction and demolition waste from project in accordance with Section 01 57 19.00 20 TEMPORARY ENVIRONMENTAL CONTROLS, and 01 74 19 CONSTRUCTION AND DEMOLITION WASTE MANAGEMENT.

3.5 PREVENTATIVE MAINTENANCE

Submit Preventative Maintenance, Condition Monitoring (Predictive Testing) and Inspection schedules with instructions that state when systems should be retested.

a. Define the anticipated length of each test, test apparatus, number of personnel identified by responsibility, and a testing validation procedure permitting the record operation capability requirements within the schedule. Provide a signoff blank for the Contractor and Contracting Officer for each test feature; e.g., liter per second, rpm, kilopascal. Include a remarks column for the testing validation

procedure referencing operating limits of time, pressure, temperature, volume, voltage, current, acceleration, velocity, alignment, calibration, adjustments, cleaning, or special system notes. Delineate procedures for preventative maintenance, inspection, adjustment, lubrication and cleaning necessary to minimize corrective maintenance and repair.

b. Repair requirements must inform operators how to check out, troubleshoot, repair, and replace components of the system. Include electrical and mechanical schematics and diagrams and diagnostic techniques necessary to enable operation and troubleshooting of the system after acceptance.

3.6 REAL PROPERTY RECORD

Near the completion of Project, but a minimum of 60 days prior to final acceptance of the work, complete and submit an accounting of all installed property with Interim DD FORM 1354. Include any additional assets, improvements, and alterations from the Draft DD FORM 1354. Contact the Contracting Officer for any project specific information necessary to complete the DD FORM 1354. Refer to UFC 1-300-08 for instruction on completing the DD FORM 1354. For information purposes, a blank fillable PDF DD FORM 1354 may be obtained at the following: http://www.dtic.mil/whs/directives/forms/eforms/dd1354.pdf

Submit the completed Checklist for DD FORM 1354 of Installed Building Equipment items. Attach this list to the updated DD FORM 1354.

3.7 NAVFAC SUSTAINABLE & ENERGY DATA RECORD CARD

Within 60 days of the completion of Project, complete an electronic copy of the NAVFAC Sustainable & Energy Data Record Card, and submit to the Contracting Officer. Draft Record card for this project should be available from Designer of Record (DOR) or Contracting Officer. Instructions and a blank DD Form (fill-able) in ADOBE (PDF) may be obtained at the Whole Building Design Guide web site by navigating: Home > Participating Agencies > Department of Defense (DoD) > NAVFAC Sustainable Development Program > Contract Documents > NAVFAC Sustainable & Energy Data Record Card; or directly at http://www.wbdg.org/pdfs/navfac_sustainable_energy_data_record_card.pdf.

-- End of Section --

THIS PAGE HAS BEEN INTENTIONALLY LEFT BLANK

SECTION 01 78 23

OPERATION AND MAINTENANCE DATA
07/06

PART 1 GENERAL

1.1 REFERENCES

The publications listed below form a part of this specification to the extent referenced. The publications are referred to within the text by the basic designation only.

ASTM INTERNATIONAL (ASTM)

ASTM E1971	(2005; R 2011) Stewardship for the Cleaning of Commercial and Institutional Buildings

1.2 SUBMISSION OF OPERATION AND MAINTENANCE DATA

Submit Operation and Maintenance (O&M) Data specifically applicable to this contract and a complete and concise depiction of the provided equipment, product, or system, stressing and enhancing the importance of system interactions, troubleshooting, and long-term preventative maintenance and operation. The subcontractors must compile and prepare data and deliver to the Contractor prior to the training of Government personnel. The Contractor must compile and prepare aggregate O&M data including clarifying and updating the original sequences of operation to as-built conditions. Organize and present information in sufficient detail to clearly explain O&M requirements at the system, equipment, component, and subassembly level. Include an index preceding each submittal. Submit in accordance with this section and Section 01 33 00 SUBMITTAL PROCEDURES.

1.2.1 Package Quality

Documents must be fully legible. Poor quality copies and material with hole punches obliterating the text or drawings will not be accepted.

1.2.2 Package Content

Data package content shall be as shown in the paragraph titled "Schedule of Operation and Maintenance Data Packages." Comply with the data package requirements specified in the individual technical sections, including the content of the packages and addressing each product, component, and system designated for data package submission, except as follows. Commissioned items without a specified data package requirement in the individual technical sections must use Data Package 3. Commissioned items with a Data Package 1 or 2 requirement must use instead Data Package 3.

1.2.3 Changes to Submittals

Manufacturer-originated changes or revisions to submitted data must be furnished by the Contractor if a component of an item is so affected subsequent to acceptance of the O&M Data. Submit changes, additions, or revisions required by the Contracting Officer for final acceptance of submitted data within 30 calendar days of the notification of this change

requirement.

1.2.4 Review and Approval

The Contractor's Commissioning Authority (CA) must review the commissioned systems and equipment submittals for completeness and applicability. The CA must verify that the systems and equipment provided meet the requirements of the Contract documents and design intent, particularly as they relate to functionality, energy performance, water performance, maintainability, sustainability, system cost, indoor environmental quality, and local environmental impacts. The CA must communicate deficiencies to the Contracting Officer. Upon a successful review of the corrections, the CA must recommend approval and acceptance of these O&M manuals to the Contracting Officer. This work is in addition to the normal review procedures for O&M data.

1.3 TYPES OF INFORMATION REQUIRED IN O&M DATA PACKAGES

1.3.1 Operating Instructions

Include specific instructions, procedures, and illustrations for the following phases of operation for the installed model and features of each system:

1.3.1.1 Safety Precautions and Hazards

List personnel hazards and equipment or product safety precautions for all operating conditions. List all residual hazards identified in the Activity Hazard Analysis provided under Section 01 35 26 GOVERNMENT SAFETY REQUIREMENTS. Provide recommended safeguards for each identified hazard.

1.3.1.2 Operator Prestart

Include procedures required to install, set up, and prepare each system for use.

1.3.1.3 Startup, Shutdown, and Post-Shutdown Procedures

Provide narrative description for Startup, Shutdown and Post-shutdown operating procedures including the control sequence for each procedure.

1.3.1.4 Normal Operations

Provide narrative description of Normal Operating Procedures. Include Control Diagrams with data to explain operation and control of systems and specific equipment.

1.3.1.5 Emergency Operations

Include Emergency Procedures for equipment malfunctions to permit a short period of continued operation or to shut down the equipment to prevent further damage to systems and equipment. Include Emergency Shutdown Instructions for fire, explosion, spills, or other foreseeable contingencies. Provide guidance and procedures for emergency operation of all utility systems including required valve positions, valve locations and zones or portions of systems controlled.

1.3.1.6 Operator Service Requirements

Include instructions for services to be performed by the operator such as lubrication, adjustment, inspection, and recording gage readings.

1.3.1.7 Environmental Conditions

Include a list of Environmental Conditions (temperature, humidity, and other relevant data) that are best suited for the operation of each product, component or system. Describe conditions under which the item equipment should not be allowed to run.

1.3.1.8 Operating Log

Provide forms, sample logs, and instructions for maintaining necessary operating records.

1.3.2 Preventive Maintenance

Include the following information for preventive and scheduled maintenance to minimize corrective maintenance and repair for the installed model and features of each system. Include potential environmental and indoor air quality impacts of recommended maintenance procedures and materials.

1.3.2.1 Lubrication Data

Include preventative maintenance lubrication data, in addition to instructions for lubrication provided under paragraph titled "Operator Service Requirements":

a. A table showing recommended lubricants for specific temperature ranges and applications.

b. Charts with a schematic diagram of the equipment showing lubrication points, recommended types and grades of lubricants, and capacities.

c. A Lubrication Schedule showing service interval frequency.

1.3.2.2 Preventive Maintenance Plan and Schedule

Include manufacturer's schedule for routine preventive maintenance, inspections, tests and adjustments required to ensure proper and economical operation and to minimize corrective maintenance. Provide manufacturer's projection of preventive maintenance work-hours on a daily, weekly, monthly, and annual basis including craft requirements by type of craft. For periodic calibrations, provide manufacturer's specified frequency and procedures for each separate operation.

1.3.2.3 Cleaning Recommendations

Provide environmentally preferable cleaning recommendations in accordance with ASTM E1971.

1.3.3 Corrective Maintenance (Repair)

Include manufacturer's recommended procedures and instructions for correcting problems and making repairs for the installed model and features of each system. Include potential environmental and indoor air quality impacts of recommended maintenance procedures and materials.

1.3.3.1 Troubleshooting Guides and Diagnostic Techniques

Include step-by-step procedures to promptly isolate the cause of typical malfunctions. Describe clearly why the checkout is performed and what conditions are to be sought. Identify tests or inspections and test equipment required to determine whether parts and equipment may be reused or require replacement.

1.3.3.2 Wiring Diagrams and Control Diagrams

Wiring diagrams and control diagrams shall be point-to-point drawings of wiring and control circuits including factory-field interfaces. Provide a complete and accurate depiction of the actual job specific wiring and control work. On diagrams, number electrical and electronic wiring and pneumatic control tubing and the terminals for each type, identically to actual installation configuration and numbering.

1.3.3.3 Maintenance and Repair Procedures

Include instructions and a list of tools required to repair or restore the product or equipment to proper condition or operating standards.

1.3.3.4 Removal and Replacement Instructions

Include step-by-step procedures and a list required tools and supplies for removal, replacement, disassembly, and assembly of components, assemblies, subassemblies, accessories, and attachments. Provide tolerances, dimensions, settings and adjustments required. Instructions shall include a combination of text and illustrations.

1.3.3.5 Spare Parts and Supply Lists

Include lists of spare parts and supplies required for maintenance and repair to ensure continued service or operation without unreasonable delays. Special consideration is required for facilities at remote locations. List spare parts and supplies that have a long lead-time to obtain.

1.3.4 Corrective Maintenance Work-Hours

Include manufacturer's projection of corrective maintenance work-hours including requirements by type of craft. Corrective maintenance that requires completion or participation of the equipment manufacturer shall be identified and tabulated separately.

1.3.5 Appendices

Provide information required below and information not specified in the preceding paragraphs but pertinent to the maintenance or operation of the product or equipment. Include the following:

1.3.5.1 Product Submittal Data

Provide a copy of all SD-03 Product Data submittals required in the applicable technical sections.

1.3.5.2 Manufacturer's Instructions

Provide a copy of all SD-08 Manufacturer's Instructions submittals required in the applicable technical sections.

1.3.5.3 O&M Submittal Data

Provide a copy of all SD-10 Operation and Maintenance Data submittals required in the applicable technical sections.

1.3.5.4 Parts Identification

Provide identification and coverage for all parts of each component, assembly, subassembly, and accessory of the end items subject to replacement. Include special hardware requirements, such as requirement to use high-strength bolts and nuts. Identify parts by make, model, serial number, and source of supply to allow reordering without further identification. Provide clear and legible illustrations, drawings, and exploded views to enable easy identification of the items. When illustrations omit the part numbers and description, both the illustrations and separate listing shall show the index, reference, or key number that will cross-reference the illustrated part to the listed part. Parts shown in the listings shall be grouped by components, assemblies, and subassemblies in accordance with the manufacturer's standard practice. Parts data may cover more than one model or series of equipment, components, assemblies, subassemblies, attachments, or accessories, such as typically shown in a master parts catalog

1.3.5.5 Warranty Information

List and explain the various warranties and clearly identify the servicing and technical precautions prescribed by the manufacturers or contract documents in order to keep warranties in force. Include warranty information for primary components such as the compressor of air conditioning system.

1.3.5.6 Extended Warranty Information

List all warranties for products, equipment, components, and sub-components whose duration exceeds one year. For each warranty listed, indicate the applicable specification section, duration, start date, end date, and the point of contact for warranty fulfillment. Also, list or reference all specific operation and maintenance procedures that must be performed to keep the warranty valid.

1.3.5.7 Personnel Training Requirements

Provide information available from the manufacturers that is needed for use in training designated personnel to properly operate and maintain the equipment and systems.

1.3.5.8 Testing Equipment and Special Tool Information

Include information on test equipment required to perform specified tests and on special tools needed for the operation, maintenance, and repair of components.

1.3.5.9 Testing and Performance Data

Include completed prefunctional checklists, functional performance test forms, and monitoring reports. Include recommended schedule for retesting and blank test forms.

1.3.5.10 Field Test Reports

Provide Field Test Reports (SD-06) that apply to equipment associated with the system.

1.3.5.11 Contractor Information

Provide a list that includes the name, address, and telephone number of the General Contractor and each Subcontractor who installed the product or equipment, or system. For each item, also provide the name address and telephone number of the manufacturer's representative and service organization that can provide replacements most convenient to the project site. Provide the name, address, and telephone number of the product, equipment, and system manufacturers.

1.4 TYPES OF INFORMATION REQUIRED IN CONTROLS O&M DATA PACKAGES

Include Data Package 5 and the following for control systems:

a. Narrative description on how to perform and apply all functions, features, modes, and other operations, including unoccupied operation, seasonal changeover, manual operation, and alarms. Include detailed technical manual for programming and customizing control loops and algorithms.

b. Full as-built sequence of operations.

c. Copies of all checkout tests and calibrations performed by the Contractor (not Cx tests).

d. Full points list. A listing of rooms shall be provided with the following information for each room:

(1) Floor

(2) Room number

(3) Room name

(4) Air handler unit ID

(5) Reference drawing number

(6) Air terminal unit tag ID

(7) Heating and/or cooling valve tag ID

(8) Minimum cfm

(9) Maximum cfm

e. Full print out of all schedules and set points after testing and acceptance of the system.

f. Full as-built print out of software program.

g. Electronic File:

(1) Assemble each manual into a composite electronically indexed file in PDF format. Provide HDD’s, DVD's or CD's as appropriate, so that each one contains all maintenance and record files, and also the Project Record Documents and Training Videos, of the entire program for this facility.

(2) Name each indexed document file in composite electronic index with applicable item name. Include a complete electronically linked operation and maintenance directory.

(3) Link the index to separate files within the composite of files. Book mark maintenance and record files, that have a Table of Contents, according to the Table of Contents

h. Marking of all system sensors and thermostats on the as-built floor plan and mechanical drawings with their control system designations.

1.5 SCHEDULE OF OPERATION AND MAINTENANCE DATA PACKAGES

Furnish the O&M data packages specified in individual technical sections. The required information for each O&M data package is as follows:

1.5.1 Data Package 1

a. Safety precautions

b. Cleaning recommendations

c. Maintenance and repair procedures

d. Warranty information

e. Contractor information

f. Spare parts and supply list

1.5.2 Data Package 2

a. Safety precautions

b. Normal operations

c. Environmental conditions

d. Lubrication data

e. Preventive maintenance plan and schedule

f. Cleaning recommendations

g. Maintenance and repair procedures

h. Removal and replacement instructions

i. Spare parts and supply list

j. Parts identification

k. Warranty information

l. Contractor information

1.5.3 Data Package 3

a. Safety precautions

b. Operator prestart

c. Startup, shutdown, and post-shutdown procedures

d. Normal operations

e. Emergency operations

f. Environmental conditions

g. Lubrication data

h. Preventive maintenance plan and schedule

i. Cleaning recommendations

j. Troubleshooting guides and diagnostic techniques

k. Wiring diagrams and control diagrams

l. Maintenance and repair procedures

m. Removal and replacement instructions

n. Spare parts and supply list

o. Product submittal data

p. O&M submittal data

q. Parts identification

r. Warranty information

s. Testing equipment and special tool information

t. Testing and performance data

u. Contractor information

PART 2 PRODUCTS

Not Used

PART 3 EXECUTION

Not Used

-- End of Section --

THIS PAGE HAS BEEN INTENTIONALLY LEFT BLANK

SECTION 01 78 23.33

OPERATION AND MAINTENANCE MANUALS FOR AVIATION FUEL SYSTEMS
02/10

PART 1 GENERAL

1.1 REFERENCES

The publications listed below form a part of this specification to the extent referenced. The publications are referred to in the text by basic designation only.

U.S. DEFENSE LOGISTICS AGENCY (DLA)

DLA J4 Handbook	(Part IV) Federal Supply Class Assignments (Numeric and Alphabetic Listing)

1.2 CONTRACTOR RESPONSIBILITY

The Contractor is responsible for providing the technical publications specified herein for all of the components, assemblies, sub-assemblies, attachments, and accessories, required to be supplied in accordance with submittal requirements of each specification section, regardless of whether the item was manufactured and assembled in-house or obtained from other sources. The System Supplier is responsible to the Contractor for providing the technical publications specified herein for all of the components, assemblies, sub-assemblies, attachments, and accessories that the System Supplier provided.

1.3 SUBMITTALS

Government approval is required for submittals with a "G" designation; submittals not having a "G" designation are for Contractor Quality Control approval. Submittals with an "S" are for inclusion in the Sustainability Notebook, in conformance to Section 01 33 29 SUSTAINABILITY REPORTING. Submit the following in accordance with Section 01 33 00 SUBMITTAL PROCEDURES:

SD-10 Operation and Maintenance Data

System Instructions; G

PART 2 PRODUCTS

2.1 DEVELOPMENT OF SUBMITTALS

2.1.1 Operation and Maintenance System Instructions (OMSI) Submittal Requirements

OMSI submittals are required in order that complete documentation can be assembled to provide the Government "Activity" with the necessary information and orientation to adequately operate and maintain the new structures/facilities of this project. Submit the OMSI documents and information specified for the equipment listed under the OMSI submittal paragraphs in each technical section. Five copies of each OMSI submittal shall be forwarded to the Contracting Officer no later than 120-days prior

to contract completion. OMSI submittals are to be submitted separate from and in addition to Contractor's product approval submittals.

2.1.2 Assembly

Provide submittals in separate folders consistent with the Contractor's standard practice. Manufacturer's manuals or data for the components, assemblies, subassemblies, and other operating parts which are provided shall be assembled into a loose-leaf notebook-type folder, indexed by major assembly and component in sequential order. Manuals shall be complete in all respects for all equipment, controls, and accessories provided. In addition, provide an electronic copy of the manuals in Adobe Acrobat 8.0 or later (CD-ROM or DVD-ROM). Utilize Bookmarks to display indexing, and assembly and component requirements.

2.2 IDENTIFICATION

On each folder identify and mark as follows:

a. Inscribe on the cover, the words, "FUEL SYSTEM OPERATION AND MAINTENANCE MANUAL", the name and location of the building, and the contract number.

b. Equipment manufacturer and/or Contractor's address and telephone number; names, address and telephone numbers of each subcontractor installing equipment; and local representative for each item of equipment.

c. Volume number and title of the folder.

d. The manual shall have a table of contents and be assembled to conform to the table of contents with the tab sheets placed before instructions covering the subject. Sub-divide manuals or provide separate manuals for each of the following categories.

(1) Operating Instructions
(2) Maintenance, Service, and Repair Instructions
(3) Parts Manual

PART 3 EXECUTION

3.1 OPERATING INSTRUCTIONS

The operator's instructions shall include specific instructions and illustrations of the equipment operation required or recommended by the manufacturer as follows:

3.1.1 Safety

Include manufacturer's safety precautions to be observed while operating under all conditions for which the equipment was designed. Clearly list all major hazards to personnel and equipment safety that are peculiar to systems and equipment described in the manual.

3.1.2 Operator Prestart

Include instructions for prestart checks, lubrication, and service requirements necessary for setting up or preparing each system for use, warm up procedures, and verification of normal operation. Include control

diagrams with data to explain detailed operation and control of each item of the equipment.

3.1.3 Starting and Shutdown Procedures and Controls

Include a control sequence describing start up operation and provide shutdown procedures and post-shutdown requirements.

3.1.4 Normal Operating Instructions

Instructions shall be sufficient to enable the mechanic to adjust, stop and start, and operate the equipment properly. Special startup precautions shall be noted, as well as other items requiring action before the equipment may be put into service. Include detailed drawings indicating procedure and valve numbers and status as to normally open/closed.

3.1.5 Emergency Operating Procedures

Include action to be taken in the event of a malfunction of the unit, either to permit a short period of continued operation or to prevent further damage to the unit and to the system in which it is installed.

3.1.6 Operator Service Requirements

Include instructions for operator service requirements during operation of the equipment.

3.2 OPERATION INSTRUCTION TO GOVERNMENT PERSONNEL

Furnish the services of competent instructors who will give full instruction to the designated personnel in the adjustment, operation and maintenance, including pertinent safety requirements, of the equipment or system specified. Each instructor shall be thoroughly familiar with all parts of the installation and shall be trained in operating theory as well as practical operation and maintenance work. Instruction shall be given during the first regular work week after the equipment or system has been accepted and turned over to the Government for regular operation. A minimum of 1 man-day (8-hours) of instruction shall be furnished for each system specified in other sections. When more than 4 man-days of instruction are specified, approximately half of the time shall be used for classroom instruction. All other time shall be used for instruction with the equipment or system. When significant changes or modifications in the equipment or system are made under the terms of the contract, additional instruction shall be provided to acquaint the operating personnel with the changes or modifications. Government representatives shall be allowed to video tape all classroom and field instructions.

3.3 MAINTENANCE, SERVICE AND REPAIR INSTRUCTIONS

The shop or maintenance manual shall include manufacturer's instructions to maintain the equipment in a safe and serviceable condition. The maintenance or shop manual shall contain all necessary instructions, illustrations, charges and diagrams covering, as a minimum, the items listed below.

3.3.1 Lubrication Instructions

a. Include a table showing recommended lubricants for specific

temperature ranges and applications.

b. Include chart(s) with schematic diagram of the equipment showing lubrication points, recommended types and grades of lubricants, and capacities. Provide a lubrication schedule showing service interval frequency.

3.3.2 Table of Preventative Maintenance Instructions

Include frequency in time, miles or hours covering routine servicing, lubrication, and adjustments.

3.3.3 Preventative Maintenance Inspection

Points and checklist should be clearly spelled out as part of operator-type inspection in this section. Include chart with schematic diagram and/or a separate inspection checklist indicating what should be examined for wear or possible malfunction and what should be reported for repair.

3.3.4 Troubleshooting Guides and Diagnostic Techniques

Provide step-by-step procedures to enable prompt isolation of the cause of a malfunction with corrective maintenance instructions. Instructions shall clearly indicate why the check out is performed and what conditions are to be sought.

3.3.5 Removal and Replacement Instructions

Provide step-by-step procedures for removal, replacement, disassembly and assembly of all components, assemblies, sub-assemblies, accessories, and attachments normally subjected to wear, damage, malfunction, and frequent replacement. These instructions should provide for a judicious combination of text and illustrations.

3.3.6 Maintenance and Repair Procedure

Provide instructions for tolerances, dimensions, settings, and adjustments normally required for performing routine maintenance servicing. Instructions shall provide the necessary information to bring equipment up to the required serviceable standard when it becomes unserviceable. Include instructions for examining equipment for needed repairs and adjustment, and any tests or inspections required to determine whether or not parts must be replaced.

3.4 PARTS MANUAL

3.4.1 Contents

The parts manual shall provide positive identification and coverage for all of the parts of components, assemblies, sub-assemblies, and accessories of the end item normally subject to wear, malfunctioning, damage, or loss. Include any special hardware requirements (eg., high-strength bolts and nuts). The parts manual may cover more than one model or series or equipments, components, assemblies, subassemblies, attachments, or accessories, such as a master parts catalog, in accordance with the manufacturer's standard commercial practice. Identification of the parts shall be such that all parts may be ordered and centrally stocked by the government without further identification to the make,

model, and serial number of the equipment being provided.

3.4.2 Illustrations, Drawings, and/or Exploded Views

Provide clear and legible illustrations, drawings, and/or views to enable easy identification of all individual parts, components, assemblies, sub-assemblies, and accessories of the end item. Show part numbers and description on illustrations or list separately. When the illustrations omit the part numbers and description, both the illustrations and separate listing shall show the index, reference, or key number which will cross-reference the illustrated part to listed part. Parts shown in the listings shall be grouped by components, assemblies, and sub-assemblies with individual parts identified to the assembly.

3.4.3 End Item Manufacturer's Part Numbers

Include parts for which the end item manufacturer has proprietary rights or has exercised design control, and for which the end item manufacturer is the logical supplier. The end item manufacturer shall also assign numbers to purchased production parts, if such parts are altered to meet the prime manufacturer's design configuration. (Repainting, marking, or other insignificant operations are not adequate cause for use of exclusively assigned numbers).

3.4.4 Components Assemblies/Parts

Include those components assemblies/parts purchased by the end item manufacturer for which the end item manufacturer does not have control, and shall be identified by the actual manufacturer's name and part numbers. Detail parts in the manufacturer's assembly, as well as attaching parts, for which the manufacturer does not have design control shall also be identified by the applicable actual manufacturer's parts numbers. This paragraph does not restrict the end item manufacturer from assigning part numbers as long as the actual manufacturer's part number and the Federal Supply Code for Manufacturer (DLA J4 Handbook) or manufacturer is shown.

3.4.5 Appendices

End item manufacturer may add an appendix for cross-reference to implement components assemblies/parts requirements when implementation in manual form varies drastically with the style, format, and method of Contractor's standard commercial practice. Subject cross-referenced in an appendix will appear in the following format:

End Item Manufacturer's Alpha Numeric Seq.	Actual Manfacturer's Name and/or FCSM* from DLA J4 Handbook	Actual Manufacturer Part No.
100001	John Doe & Co. 000000	2000002
*Federal Supply Code for Manufacturers Cataloging Handbook, Name to Code		

3.5 VALIDATION

Each submittal shall be validated by the Contractor or Manufacturer as being accurate and applicable to the systems and equipment provided.

3.6 SPECIFIC EQUIPMENT SUBMITTALS

The technical sections of this specification identify the specific equipment or systems for which OMSI submittals are required. This paragraph' and its subparagraph contain a general list of various types of equipment and systems together with the OMSI information required for each type. The applicable OMSI information contained in this paragraph shall be submitted for each specific piece of equipment or system listed under the "OMSI Submittals" paragraph in the technical sections. Operating instructions; maintenance, service, and repair instructions; and parts manuals shall conform to the requirements of their -respective paragraph herein. Provide validation in accordance with paragraph VALIDATION for all submittals.

3.6.1 Pressure Gages

a. Manufacturer's descriptive literature, general.

b. Parts manuals and recommended spare parts list.

c. Maintenance, service and repair instructions.

d. Manufacturer's name, model number, serial number, Federal Stock Number (if any).

3.6.2 Automatic Pump Controls

Includes Pressure Indicating Transmitters, Flow Switches, Venturi Tubes, Differential Pressure Transmitters.

a. Manufacturer's descriptive literature, general.

b. Parts manual.

c. Maintenance, service and repair instructions.

d. Operating Instructions.

e. Manufacturer's name, model number, serial number, Federal Stock Number (if any).

f. Performance data at specified conditions.

g. Control wiring diagrams showing all terminations of conductors (and all control devices) labeled to permit identification in the field; part numbers of all control devices; normally open or normally closed; voltage of all control components.

h. Name, address and telephone number of the nearest manufacturer's representative.

3.6.3 Meters

a. Manufacturer's descriptive literature, general.

b. Parts manual and recommended spare parts list.

c. Maintenance, service, calibration instructions, and repair

instructions.

d. Operating Instructions.

e. Manufacturer's name, model number, serial number, Federal Stock Number (if any).

f. Performance data at specified conditions.

g. Name, address and telephone number of the nearest manufacturer's representative.

3.6.4 Product Recovery Tank and Accessories

a. Manufacturer's descriptive literature, general.

b. Parts manual and recommended spare parts list.

c. Maintenance, service and repair instructions.

d. Operating Instructions.

e. Manufacturer's name, model number, serial number, Federal Stock Number (if any).

f. Performance data at specified conditions.

g. Name, address and telephone number of the nearest manufacturer's representative.

3.6.5 Operating Tank Level Indicator

a. Manufacturer's descriptive literature, general.

b. Parts manual and recommended spare parts list.

c. Maintenance, service and repair instructions.

d. Operating Instructions.

e. Manufacturer's name, model number, serial number, Federal Stock Number (if any).

f. Performance data at specified conditions.

g. Control wiring diagrams showing all terminations of conductors (and all control devices) labeled to permit identification in the field; part numbers of all control devices; normalcy open or normally closed; voltage of all control components.

h. Name, address and telephone number of the nearest manufacturer's representative.

3.6.6 Piping and Fittings

a. Certificates of Compliance.

b. Batch run numbers.

c. Manufacturer's descriptive literature, general.

d. Name address and telephone number of manufacturer.

3.6.7 Manual Valves

a. Manufacturer's descriptive literature, general.

b. Parts manual and recommended spare parts list.

c. Maintenance, service and repair instructions.

d. Operating Instructions.

e. Manufacturer's name, model number, serial number, Federal Stock Number (if any).

f. Performance data at specified conditions.

g. Where specified to have limit switches, control wiring diagrams showing all terminations of conductors (and all control devices) labeled to permit identification in the field; part numbers of all control devices; normally open or normally closed; voltage of all control components.

h. Name, address and telephone number of the nearest manufacturer's representative.

3.6.8 Gaskets and Isolating Gasket Kits

a. Manufacturer's descriptive literature, general.

b. Manufacturer's name, model number, serial number, Federal Stock Number (if any).

c. Name, address and telephone number of the nearest manufacturer's representative.

3.6.9 Strainers

a. Manufacturer's descriptive literature, general.

b. Parts manual and recommended spare parts list.

c. Maintenance, service and repair instructions.

d. Manufacturer's name, model number, serial number, Federal Stock Number (if any).

e. Name, address and telephone number of the nearest manufacturer's representative.

3.6.10 Protective Coatings

a. Manufacturer's descriptive literature, general.

b. Maintenance, service and repair instructions.

c. Manufacturer's name, model number, serial number, Federal Stock Number

(if any).

d. Name, address and telephone number of the nearest manufacturer's representative.

e. Product standards compliance and the materials system data sheet.

3.6.11 Sample Connections

a. Manufacturer's descriptive literature, general.

b. Parts manual and recommended spare parts list.

c. Maintenance, service and repair instructions.

d. Operating Instructions.

e. Manufacturer's name, model number, serial number, Federal Stock Number (if any).

f. Name, address and telephone number of the nearest manufacturer's representative.

3.6.12 Filter Separators

a. Manufacturer's descriptive literature, general.

b. Parts manual and recommended spare parts list.

c. Maintenance, service and repair instructions.

d. Operating Instructions.

e. Manufacturer's name, model number, serial number, Federal Stock Number (if any).

f. Performance data at specified conditions.

g. Name, address and telephone number of the nearest manufacturer's representative.

3.6.13 Water Draw-Off System

a. Manufacturer's descriptive literature, general.

b. Maintenance, service and repair instructions.

c. Operating Instructions.

d. Manufacturer's name, model number, serial number, Federal Stock Number (if any).

e. Name, address and telephone number of the nearest manufacturer's representative.

3.6.14 Pumps - Fueling, Fuel Transfer

a. Manufacturer's descriptive literature, general.

b. Parts manual and recommended spare parts list.

c. Maintenance, service and repair instructions.

d. Manufacturer's name, model number, serial number, Federal Stock Number (if any).

e. Performance data at specified flow rates. Performance shall include:

(1) Head developed, horsepower required and efficiency.

(2) Pump curves, flow and power requirements, efficiency, head and operating speed. Curves to show operating points at full range of operating conditions.

f. Control wiring diagrams showing all terminations of conductors (and all control devices) labeled to permit identification in the field; part numbers of all control devices; normally open or normally closed; voltage of all control components and operational description.

g. Plan and elevation views of equipment showing clearance required for maintenance and/or replacement.

h. Name, address and telephone number of the nearest manufacturer's representative.

i. Shipping and operating weights.

j. Operating instructions.

k. Factory run test curves indicating flow, head rpm, vibration amplitude and BHP.

3.6.15 Flexible Hoses

a. Manufacturer's descriptive literature, general.

b. Maintenance service and repair instructions.

c. Manufacturer's name, model number, serial number.

d. Name, address and telephone number of the nearest manufacturer's representative.

3.6.16 Control Valves

Submit for each type control valve specified

a. Manufacturer's descriptive literature, general.

b. Operational description of valve and control pilots.

c. Description of valve assembly complete with parts list.

d. Recommended spare parts list for main valve and pilot control systems.

e. Instructions for trouble shooting.

f. Maintenance, service and repair instructions.

g. Manufacturer's name, model number and stock number.

h. Operational Test Data.

3.6.17 Engine-Generator

a. Internal and interconnecting wiring and control diagrams with data to explain detailed operation and control of the system or equipment.

b. A control sequence describing startup', operation, and shutdown.

c. Description of the function of each principal item of equipment.

d. Installation and maintenance instructions.

e. Safety precautions.

f. Diagrams and illustrations.

g. Testing methods.

h. Performance data.

i. Lubrication schedule including type, grade, temperature range, and frequency.

j. Parts list: The list shall indicate sources of supply, recommended spare parts, and name of servicing organization.

k. List qualified permanent servicing organizations for support of the equipment, including addresses and certified qualifications.

3.6.18 Fire Alarm and Fire Detecting System

a. Manufacturer's descriptive literature, general.

b. Parts manual.

c. Maintenance, service and repair instructions.

d. Operating Instructions.

e. Drawing of component arrangement, schedule of components with sizes, types, and ratings, and wiring diagrams.

f. Manufacturer's name, model number, serial number, Federal Stock Number (if any).

g. Name, address and telephone number of the nearest manufacturer's representative.

3.6.19 Motor Control Center

a. Internal and interconnecting wiring and control diagrams with data to explain detailed operation and control of the system or equipment.

b. A control sequence describing startup, operation, and shutdown.

c. Description of the function of each principal item of equipment.

d. Installation and maintenance instructions.

e. Safety precautions.

f. Diagrams and illustrations.

g. Parts list.

h. Drawing of component arrangement, schedule of components with sizes, types, and ratings.

i. Manufacturer's name, model number, serial number.

j. Name, address and telephone number of the nearest manufacturer's representative.

3.6.20 Non-Automatic Transfer Switch

a. Manufacturer's descriptive literature, general.

b. Parts list.

c. Maintenance, service and repair instructions.

d. Operating Instructions.

e. Drawing of component arrangement, schedule of components with sizes, types, and ratings, and wiring diagrams.

f. Manufacturer's name, model number, serial number, Federal Stock Number (if any).

g. Name, address and telephone number of the nearest manufacturer's representative.

3.6.21 Pump Control Panel (PCP)

a. General description and specifications.

b. Comprehensive discussion of both hardware and operating program.

c. Installation and initial checkout procedures.

d. Detailed electrical and logical description.

e. Complete troubleshooting procedures, diagrams, and guidelines.

f. Complete alignment and calibration procedures for components.

g. Preventive maintenance requirements.

h. Detailed system schematics, system field assembly drawings, and system component specifications and dimensions.

i. Complete spare parts lists.

j. Interface requirements and capabilities.

k. Signal identification and timing diagrams.

l. Complete as-built bill of materials, control drawings, schedules, and sequence of operations.

m. Safety precautions.

n. Control sequence describing start-up, operation, and shutdown. Control sequence shall be integrated with startup and operation of the motor control center.

o. Part list which shall indicate sources of supply, recommended spare parts, and name of servicing organization.

p. Manufacturer's name, address, and telephone number.

q. Supplier name, manufacturer and version of all software including: PLC, desktop computer, laptop computer, and "alternate" desktop computer.

-- End of Section --

THIS PAGE HAS BEEN INTENTIONALLY LEFT BLANK

SECTION 02 41 00

DEMOLITION
05/10

PART 1 GENERAL

1.1 REFERENCES

The publications listed below form a part of this specification to the extent referenced. The publications are referred to within the text by the basic designation only.

AIR-CONDITIONING, HEATING AND REFRIGERATION INSTITUTE (AHRI)

AHRI Guideline K	(2009) Guideline for Containers for Recovered Non-Flammable Fluorocarbon Refrigerants

AMERICAN SOCIETY OF SAFETY ENGINEERS (ASSE/SAFE)

ASSE/SAFE A10.6	(2006) Safety Requirements for Demolition Operations

U.S. ARMY CORPS OF ENGINEERS (USACE)

EM 385-1-1	(2014) Safety and Health Requirements Manual

U.S. FEDERAL AVIATION ADMINISTRATION (FAA)

FAA AC 70/7460-1	(2007; Rev K) Obstruction Marking and Lighting

U.S. NATIONAL ARCHIVES AND RECORDS ADMINISTRATION (NARA)

40 CFR 61	National Emission Standards for Hazardous Air Pollutants
40 CFR 82	Protection of Stratospheric Ozone

1.2 PROJECT DESCRIPTION

1.2.1 Demolition Plan

Prepare a Demolition Plan and submit proposed demolition, and removal procedures for approval before work is started. Include in the plan procedures for careful removal and disposition of materials specified to be salvaged, coordination with other work in progress, a disconnection schedule of utility services, a detailed description of methods and equipment to be used for each operation and of the sequence of operations. Identify components and materials to be salvaged for reuse or recycling with reference to paragraph Existing Facilities to be Removed. Append tracking forms for all removed materials indicating type, quantities, condition, destination, and end use. Coordinate with Waste Management Plan.Provide procedures for safe conduct of the work in accordance with EM 385-1-1. Plan shall be approved by Contracting Officer prior to work

beginning.

1.2.2 General Requirements

Do not begin demolition or deconstruction until authorization is received from the Contracting Officer. The work of this section is to be performed in a manner that maximizes the value derived from the salvage and recycling of materials. Remove rubbish and debris from the project site; do not allow accumulations. The work includes demolition, salvage of identified items and materials, and removal of resulting rubbish and debris. Remove rubbish and debris from Government property daily, unless otherwise directed. Store materials that cannot be removed daily in areas specified by the Contracting Officer. In the interest of occupational safety and health, perform the work in accordance with EM 385-1-1, Section 23, Demolition, and other applicable Sections.

1.3 ITEMS TO REMAIN IN PLACE

Take necessary precautions to avoid damage to existing items to remain in place, to be reused, or to remain the property of the Government. Repair or replace damaged items as approved by the Contracting Officer. Coordinate the work of this section with all other work indicated. Construct and maintain shoring, bracing, and supports as required. Ensure that structural elements are not overloaded. Increase structural supports or add new supports as may be required as a result of any cutting, removal, deconstruction, or demolition work performed under this contract. Do not overload structural elements or pavements to remain. Provide new supports and reinforcement for existing construction weakened by demolition, deconstruction, or removal work. Repairs, reinforcement, or structural replacement require approval by the Contracting Officer prior to performing such work.

1.3.1 Existing Construction Limits and Protection

Do not disturb existing construction beyond the extent indicated or necessary for installation of new construction. Provide temporary shoring and bracing for support of building components to prevent settlement or other movement. Provide protective measures to control accumulation and migration of dust and dirt in all work areas. Remove dust, dirt, and debris from work areas daily.

1.3.2 Utility Service

Maintain existing utilities indicated to stay in service and protect against damage during demolition and deconstruction operations. Prior to start of work, utilities serving each area of alteration or removal will be shut off by the Government and disconnected and sealed by the Contractor.

1.3.3 Facilities

Protect electrical and mechanical services and utilities. Where removal of existing utilities and pavement is specified or indicated, provide approved barricades, temporary covering of exposed areas, and temporary services or connections for electrical and mechanical utilities. Floors, roofs, walls, columns, pilasters, and other structural components that are designed and constructed to stand without lateral support or shoring, and are determined to be in stable condition, must remain standing without additional bracing, shoring, or lateral support until demolished or deconstructed, unless directed otherwise by the Contracting Officer.

Ensure that no elements determined to be unstable are left unsupported and place and secure bracing, shoring, or lateral supports as may be required as a result of any cutting, removal, deconstruction, or demolition work performed under this contract.

1.4 BURNING

The use of burning at the project site for the disposal of refuse and debris will not be permitted.

1.5 SUBMITTALS

Government approval is required for submittals with a "G" designation; submittals not having a "G" designation are for Contractor Quality Control approval. Submittals with an "S" are for inclusion in the Sustainability Notebook, in conformance to Section 01 33 29 SUSTAINABILITY REPORTING. Submit the following in accordance with Section 01 33 00 SUBMITTAL PROCEDURES:

SD-01 Preconstruction Submittals

Demolition Plan; G
Existing Conditions

SD-07 Certificates

Notification; G

SD-11 Closeout Submittals

Receipts

1.6 QUALITY ASSURANCE

Submit timely notification of demolition projects to Federal, State, regional, and local authorities in accordance with 40 CFR 61, Subpart M. Notify the Contracting Officer in writing 10 working days prior to the commencement of work in accordance with 40 CFR 61, Subpart M. Comply with federal, state, and local hauling and disposal regulations. In addition to the requirements of the "Contract Clauses," conform to the safety requirements contained in ASSE/SAFE A10.6. Comply with the Environmental Protection Agency requirements specified. Use of explosives will not be permitted.

1.6.1 Dust and Debris Control

Prevent the spread of dust and debris and avoid the creation of a nuisance or hazard in the surrounding area. Do not use water if it results in hazardous or objectionable conditions such as, but not limited to flooding or pollution.

1.7 PROTECTION

1.7.1 Traffic Control Signs

a. Where pedestrian and driver or aircraft safety is endangered in the area of removal work, use traffic barricades with flashing lights. Anchor barricades in a manner to prevent displacement by wind, jet or prop blast. Notify the Contracting Officer prior to

beginning such work.

Provide a minimum of 2 FAA type L-810 steady burning red obstruction lights on temporary structures (including cranes) over 30 m, but less than 60 m above ground level. The use of LED based obstruction lights are not permitted. For temporary structures (including cranes) over 60 m above ground level provide obstruction lighting in accordance with FAA AC 70/7460-1. Light construction and installation shall comply with FAA AC 70/7460-1. Lights shall be operational during periods of reduced visibility, darkness, and as directed by the Contracting Officer. Maintain the temporary services during the period of construction and remove only after permanent services have been installed and tested and are in operation.

1.7.2 Protection of Personnel

Before, during and after the demolition work continuously evaluate the condition of the structure being demolished and take immediate action to protect all personnel working in and around the project site. No area, section, or component of floors, roofs, walls, columns, pilasters, or other structural element will be allowed to be left standing without sufficient bracing, shoring, or lateral support to prevent collapse or failure while workmen remove debris or perform other work in the immediate area.

1.8 FOREIGN OBJECT DAMAGE (FOD)

Aircraft and aircraft engines are subject to FOD from debris and waste material lying on airfield pavements. Remove all such materials that may appear on operational aircraft pavements due to the Contractor's operations. If necessary, the Contracting Officer may require the Contractor to install a temporary barricade at the Contractor's expense to control the spread of FOD potential debris. The barricade shall include a fence covered with a fabric designed to stop the spread of debris. Anchor the fence and fabric to prevent displacement by winds or jet/prop blasts. Remove barricade when no longer required.

1.9 RELOCATIONS

Perform the removal and reinstallation of relocated items as indicated with workmen skilled in the trades involved. Repair or replace items to be relocated which are damaged by the Contractor with new undamaged items as approved by the Contracting Officer.

1.10 EXISTING CONDITIONS

Before beginning any demolition or deconstruction work, survey the site and examine the drawings and specifications to determine the extent of the work. Record existing conditions in the presence of the Contracting Officer showing the condition of structures and other facilities adjacent to areas of alteration or removal. Photographs sized 100 mm will be acceptable as a record of existing conditions. Include in the record the elevation of the top of foundation walls, finish floor elevations, possible conflicting electrical conduits, plumbing lines, alarms systems, the location and extent of existing cracks and other damage and description of surface conditions that exist prior to before starting work. It is the Contractor's responsibility to verify and document all required outages which will be required during the course of work, and to note these outages on the record document. Submit survey results.

PART 2 PRODUCTS

2.1 FILL MATERIAL

a. Comply with excavating, backfilling, and compacting procedures for soils used as backfill material to fill basements, voids, depressions or excavations resulting from demolition or deconstruction of structures. Fill material shall be waste products from demolition or deconstruction until all waste appropriate for this purpose is consumed.

PART 3 EXECUTION

3.1 EXISTING FACILITIES TO BE REMOVED

Inspect and evaluate existing structures onsite for reuse. Existing construction scheduled to be removed for reuse shall be disassembled. Dismantled and removed materials are to be separated, set aside, and prepared as specified, and stored or delivered to a collection point for reuse, remanufacture, recycling, or other disposal, as specified. Materials shall be designated for reuse onsite whenever possible.

3.1.1 Utilities and Related Equipment

3.1.1.1 General Requirements

Do not interrupt existing utilities serving occupied or used facilities, except when authorized in writing by the Contracting Officer. Do not interrupt existing utilities serving facilities occupied and used by the Government except when approved in writing and then only after temporary utility services have been approved and provided. Do not begin demolition or deconstruction work until all utility disconnections have been made. Shut off and cap utilities for future use, as indicated.

3.1.1.2 Disconnecting Existing Utilities

Remove existing utilities , as indicated and terminate in a manner conforming to the nationally recognized code covering the specific utility and approved by the Contracting Officer. When utility lines are encountered but are not indicated on the drawings, notify the Contracting Officer prior to further work in that area. Remove meters and related equipment and deliver to a location in accordance with instructions of the Contracting Officer.

3.1.2 Chain Link Fencing

Remove chain link fencing, gates and other related salvaged items scheduled for removal and transport to designated areas. Remove gates as whole units. Cut chain link fabric to 7 m lengths and store in rolls off the ground.

3.1.3 Paving and Slabs

Remove concrete and asphaltic concrete paving and slabs as indicated to a depth of 600 mm below existing adjacent grade. Provide neat sawcuts at limits of pavement removal as indicated. Pavement and slabs designated to be recycled and utilized in this project shall be moved, ground and stored

as directed by the Contracting Officer. Pavement and slabs not to be used in this project shall be removed from the Installation at Contractor's expense.

3.1.4 Masonry

Sawcut and remove masonry so as to prevent damage to surfaces to remain. Where new masonry adjoins existing, the new work shall abut or tie into the existing construction as indicated. Provide square, straight edges and corners where existing masonry adjoins new work and other locations.

3.1.5 Concrete

Saw concrete along straight lines to a depth of a minimum 50 mm. Make each cut in walls perpendicular to the face and in alignment with the cut in the opposite face. Break out the remainder of the concrete provided that the broken area is concealed in the finished work, and the remaining concrete is sound. At locations where the broken face cannot be concealed, grind smooth or saw cut entirely through the concrete.

3.1.6 Patching

Where removals leave holes and damaged surfaces exposed in the finished work, patch and repair these holes and damaged surfaces to match adjacent finished surfaces, using on-site materials when available. Where new work is to be applied to existing surfaces, perform removals and patching in a manner to produce surfaces suitable for receiving new work. Finished surfaces of patched area shall be flush with the adjacent existing surface and shall match the existing adjacent surface as closely as possible as to texture and finish. Patching shall be as specified and indicated, and shall include:

a. Concrete and Masonry: Completely fill holes and depressions, left as a result of removals in existing masonry walls to remain, with an approved masonry patching material, applied in accordance with the manufacturer's printed instructions.

b. Where existing partitions have been removed leaving damaged or missing resilient tile flooring, patch to match the existing floor tile.

c. Patch acoustic lay-in ceiling where partitions have been removed. The transition between the different ceiling heights shall be effected by continuing the higher ceiling level over to the first runner on the lower ceiling and closing the vertical opening with a painted sheet metal strip.

3.1.7 Mechanical Equipment and Fixtures

3.1.7.1 Preparation for Storage

Remove water, dirt, dust, and foreign matter from units; tanks, piping and fixtures shall be drained; interiors, if previously used to store flammable, explosive, or other dangerous liquids, shall be steam cleaned. Seal openings with caps, plates, or plugs. Secure motors attached by flexible connections to the unit. Change lubricating systems with the proper oil or grease.

3.1.7.2 Piping

Disconnect piping at unions, flanges and valves, and fittings as required to reduce the pipe into straight lengths for practical storage. Store salvaged piping according to size and type. If the piping that remains can become pressurized due to upstream valve failure, end caps, blind flanges, or other types of plugs or fittings with a pressure gage and bleed valve shall be attached to the open end of the pipe to ensure positive leak control. Carefully dismantle piping that previously contained gas, gasoline, oil, or other dangerous fluids, with precautions taken to prevent injury to persons and property. Store piping outdoors until all fumes and residues are removed. Box prefabricated supports, hangers, plates, valves, and specialty items according to size and type. Classify piping not designated for salvage, or not reusable, as scrap metal.

3.1.8 Electrical Equipment and Fixtures

Salvage motors, motor controllers, and operating and control equipment that are attached to the driven equipment. Salvage wiring systems and components. Box loose items and tag for identification. Disconnect primary, secondary, control, communication, and signal circuits at the point of attachment to their distribution system.

3.1.8.1 Fixtures

Remove and salvage electrical fixtures. Salvage unprotected glassware from the fixture and salvage separately. Salvage incandescent, mercury-vapor, and fluorescent lamps and fluorescent ballasts manufactured prior to 1978, boxed and tagged for identification, and protected from breakage.

3.1.8.2 Electrical Devices

Remove and salvage switches, switchgear, transformers, conductors including wire and nonmetallic sheathed and flexible armored cable, regulators, meters, instruments, plates, circuit breakers, panelboards, outlet boxes, and similar items. Box and tag these items for identification according to type and size.

3.1.8.3 Wiring Ducts or Troughs

Remove and salvage wiring ducts or troughs. Dismantle plug-in ducts and wiring troughs into unit lengths. Remove plug-in or disconnecting devices from the busway and store separately.

3.1.8.4 Conduit and Miscellaneous Items

Salvage conduit except where embedded in concrete or masonry. Consider corroded, bent, or damaged conduit as scrap metal. Sort straight and undamaged lengths of conduit according to size and type. Classify supports, knobs, tubes, cleats, and straps as debris to be removed and disposed.

3.1.9 Items With Unique/Regulated Disposal Requirements

Remove and dispose of items with unique or regulated disposal requirements in the manner dictated by law or in the most environmentally responsible manner.

3.2 CONCURRENT EARTH-MOVING OPERATIONS

Do not begin excavation, filling, and other earth-moving operations that are sequential to demolition or deconstruction work in areas occupied by structures to be demolished or deconstructed until all demolition and deconstruction in the area has been completed and debris removed. Fill holes, open basements and other hazardous openings.

3.3 DISPOSITION OF MATERIAL

3.3.1 Title to Materials

Except for salvaged items specified in related Sections, and for materials or equipment scheduled for salvage, all materials and equipment removed and not reused or salvaged, shall become the property of the Contractor and shall be removed from Government property. Title to materials resulting from demolition and deconstruction, and materials and equipment to be removed, is vested in the Contractor upon approval by the Contracting Officer of the Contractor's demolition, deconstruction, and removal procedures, and authorization by the Contracting Officer to begin demolition and deconstruction. The Government will not be responsible for the condition or loss of, or damage to, such property after contract award. Showing for sale or selling materials and equipment on site is prohibited.

3.3.2 Reuse of Materials and Equipment

Remove and store materials and equipment indicated to be reused or relocated to prevent damage, and reinstall as the work progresses.

3.3.3 Disposal of Ozone Depleting Substance (ODS)

Class I and Class II ODS are defined in Section, 602(a) and (b), of The Clean Air Act. Prevent discharge of Class I and Class II ODS to the atmosphere. Place recovered ODS in cylinders meeting AHRI Guideline K suitable for the type ODS (filled to no more than 80 percent capacity) and provide appropriate labeling. Recovered ODS shall be removed from Government property and disposed of in accordance with 40 CFR 82. Products, equipment and appliances containing ODS in a sealed, self-contained system (e.g. residential refrigerators and window air conditioners) shall be disposed of in accordance with 40 CFR 82. Submit Receipts or bills of lading, as specified. Submit a shipping receipt or bill of lading for all containers of ozone depleting substance (ODS) shipped to the Defense Depot, Richmond, Virginia.

3.3.3.1 Special Instructions

No more than one type of ODS is permitted in each container. A warning/hazardous label shall be applied to the containers in accordance with Department of Transportation regulations. All cylinders including but not limited to fire extinguishers, spheres, or canisters containing an ODS shall have a tag with the following information:

a. Activity name and unit identification code

b. Activity point of contact and phone number

c. Type of ODS and pounds of ODS contained

d. Date of shipment

e. National stock number (for information, call (804) 279-4525).

3.4 CLEANUP

Remove debris and rubbish from basement and similar excavations. Remove and transport the debris in a manner that prevents spillage on streets or adjacent areas. Apply local regulations regarding hauling and disposal.

3.5 DISPOSAL OF REMOVED MATERIALS

3.5.1 Regulation of Removed Materials

Dispose of debris, rubbish, scrap, and other nonsalvageable materials resulting from removal operations with all applicable federal, state and local regulations as contractually specified.

3.5.2 Burning on Government Property

Burning of materials removed from demolished and deconstructed structures will not be permitted on Government property.

3.5.3 Removal to Spoil Areas on Government Property

Transport noncombustible materials removed from demolition and deconstruction structures to designated spoil areas on Government property.

3.5.4 Removal from Government Property

Transport waste materials removed from demolished and deconstructed structures, except waste soil, from Government property for legal disposal. Dispose of waste soil as directed.

3.6 REUSE OF SALVAGED ITEMS

Recondition salvaged materials and equipment designated for reuse before installation. Replace items damaged during removal and salvage operations or restore them as necessary to usable condition.

-- End of Section --

THIS PAGE HAS BEEN INTENTIONALLY LEFT BLANK

SECTION 02 56 13

WASTE CONTAINMENT GEOMEMBRANE
02/10

PART 1 GENERAL

1.1 MEASUREMENT AND PAYMENT

Measurement shall be made of the total surface area in square meters covered by geomembrane. Final quantities will be based on as-built conditions. Allowance will be made for geomembrane in anchor and drainage trenches; however, no allowance will be made for waste, overlap, repairs, or materials used for the convenience of the Contractor. Geomembrane installed and accepted by the Contracting Officer will be paid for at the respective contract unit price in the bidding schedule.

1.2 REFERENCES

The publications listed below form a part of this specification to the extent referenced. The publications are referred to within the text by the basic designation only.

ASTM INTERNATIONAL (ASTM)

ASTM D1004	(2013) Initial Tear Resistance of Plastic Film and Sheeting
ASTM D1505	(2010) Density of Plastics by the Density-Gradient Technique
ASTM D1603	(2014) Carbon Black Content in Olefin Plastics
ASTM D3895	(2014) Oxidative-Induction Time of Polyolefins by Differential Scanning Calorimetry
ASTM D4218	(1996; R 2008) Determination of Carbon Black Content in Polyethylene Compounds by the Muffle-Furnace Technique
ASTM D4833/D4833M	(2007; E 2013; R 2013) Index Puncture Resistance of Geotextiles, Geomembranes, and Related Products
ASTM D5199	(2012) Measuring Nominal Thickness of Geosynthetics
ASTM D5397	(2007; R 2012) Evaluation of Stress Crack Resistance of Polyolefin Geomembranes Using Notched Constant Tensile Load Test
ASTM D5596	(2003; R 2009) Microscopic Evaluation of the Dispersion of Carbon Black in Polyolefin Geosynthetics

ASTM D5721	(2008; R 2013) Air-Oven Aging of Polyolefin Geomembranes
ASTM D5885	(2006; R 2012) Oxidative Induction Time of Polyolefin Geosynthetics by High-Pressure Differential Scanning Calorimetry
ASTM D638	(2010) Standard Test Method for Tensile Properties of Plastics
ASTM D6392	(2012) Determining the Integrity of Nonreinforced Geomembrane Seams Produced Using Thermo-Fusion Methods
ASTM D7238	(2006; R 2012) Standard Test Method for Effect of Exposure of Unreinforced Polyolefin Geomembrane Using Fluorescent UV Condensation Apparatus

GEOSYNTHETIC INSTITUTE (GSI)

GSI GRI GM7	(1995) Accelerated Curing of Geomembrane Test Strip Seams Made by Chemical Fusion Methods
GSI GRI GM9	(1995) Cold Weather Seaming of Geomembranes

1.3 SUBMITTALS

Government approval is required for submittals with a "G" designation; submittals not having a "G" designation are for Contractor Quality Control approval. Submittals with an "S" are for inclusion in the Sustainability Notebook, in conformance to Section 01 33 29 SUSTAINABILITY REPORTING. Submit the following in accordance with Section 01 33 00 SUBMITTAL PROCEDURES:

SD-02 Shop Drawings

Penetrations; G

SD-03 Product Data

Materials; G
Field Seaming; G
Qualifications; G

SD-04 Samples

Samples; G

SD-06 Test Reports

Surface Preparation; G
Non-Destructive Field Seam Continuity Testing; G
Destructive Field Seam Testing; G
Destructive Seam Test Repairs; G
Tests; G

SD-07 Certificates

Samples; G
Materials; G
Surface Preparation; G
Destructive Field Seam Testing; G
Destructive Seam Test Repairs; G
Tests; G

1.4 QUALITY CONTROL

1.4.1 Qualifications

1.4.1.1 Manufacturer

Manufacturer shall have produced the proposed geomembrane sheets for at least 5 completed projects having a total minimum area of 930,000 square meters.

1.4.1.2 Fabricator

The fabricator is responsible for seaming geomembrane sheets into panels. Fabricator shall have fabricated the proposed geomembrane panels for at least 5 completed projects having a total minimum area of 186,000 square meters.

1.4.1.3 Installer

The installer is responsible for field handling, deploying, seaming, anchoring, and field Quality Control (QC) testing of the geomembrane. The installer shall have installed the proposed geomembrane material for at least 5 completed projects having a total minimum area of 186,000 square meters. At least one seamer shall have experience seaming a minimum of 46,500 square meters of the proposed geomembrane using the same type of seaming equipment and geomembrane thickness specified for this project.

1.4.1.4 QC Inspector

The QC inspector is the person or corporation hired by the Contractor, who is responsible for monitoring and documenting activities related to the QC of the geomembrane from manufacturing through installation. The QC inspector shall have provided QC inspection during installation of the proposed geomembrane material for at least 5 completed projects having a total minimum area of 186,000 square meters.

1.4.1.5 QC Laboratory

The QC laboratory shall have provided QC and/or Quality Assurance (QA) testing of the proposed geomembrane and geomembrane seams for at least five completed projects having a total minimum area of 186,000 square meters. The QC laboratory shall be accredited via the Geosynthetic Accreditation Institute's Laboratory Accreditation Program (GAI-LAP) for the tests the QC laboratory will be required to perform.

1.4.2 Submittal Requirements

Submit manufacturer's, and fabricator's qualification statements, including resumes of key personnel involved in the project, a minimum of 7 days prior to geomembrane shipment. Also submit installer's, QC inspector's, and QC laboratory's qualification statements including resumes of key personnel

involved in the project a minimum of 7 days prior to geomembrane placement. The submittal from the QC laboratory shall include verification that the laboratory is accredited via the Geosynthetic Accreditation Institute's Laboratory Accreditation Program (GAI-LAP) for the tests the QC laboratory will be required to perform. The following shall also be submitted:

a. Manufacturer's and fabricator's QC manuals, a minimum of 7 days prior to geomembrane shipment. Installer's QC manual, a minimum of 7 days prior to geomembrane placement.

b. Geomembrane QA and QC samples.

c. Manufacturer's certified raw and sheet material test reports and a copy of the QC certificates, a minimum of 7 days prior to shipment of geomembrane to the site.

d. Certification from the QC inspector and installer of the acceptability of the surface on which the geomembrane is to be placed, immediately prior to geomembrane placement.

e. QC inspector certified test results on all field seams. Installer and certified QC laboratory test results on all destructively tested field seams. QC inspector certified test results on all repaired seams. Certified QC test results.

f. Certified laboratory interface friction test results including description of equipment and test method, a minimum of 7 days prior to geomembrane shipment.

1.5 DELIVERY, STORAGE AND HANDLING

1.5.1 Delivery

The QC inspector shall be present during delivery and unloading of the geomembrane. Each geomembrane roll/panel shall be labeled with the manufacturer's name, product identification number, roll/panel number, and roll dimensions.

1.5.2 Storage

Temporary storage at the project site shall be on a level surface, free of sharp objects where water cannot accumulate. The geomembrane shall be protected from puncture, abrasion, excessive heat or cold, material degradation, or other damaging circumstances. Storage shall not result in crushing the core of roll goods or flattening of the rolls. Rolls shall not be stored more than two high. Palleted materials shall be stored on level surfaces and shall not be stacked on top of one another. Ultraviolet sensitive materials (i.e., PVC) shall be covered with a sacrificial opaque and waterproof covering or placed in a temporary shelter. Damaged geomembrane shall be removed from the site and replaced with geomembrane that meets the specified requirements.

1.5.3 Handling

Rolls/panels shall not be dragged, lifted by one end, or dropped. A pipe or solid bar, of sufficient strength to support the full weight of a roll without significant bending, shall be used for all handling activities. The diameter of the pipe or solid bar shall be small enough to be easily inserted through the core of the roll. Chains shall be used to link the

ends of the pipe or bar to the ends of a spreader bar. The spreader bar shall be wide enough to prevent the chains from rubbing against the ends of the roll. Alternatively, a stinger bar protruding from the end of a forklift or other equipment may be used. The stinger bar shall be at least three-fourths the length of the core and also must be capable of supporting the full weight of the roll without significant bending. If recommended by the manufacturer, a sling handling method utilizing appropriate loading straps may be used.

1.6 AMBIENT CONDITIONS

Geomembrane shall not be deployed or field-seamed in the presence of excess moisture (i.e., rain, fog, dew), in areas of ponded water, or in the presence of excess wind. Unless authorized by the Contracting Officer, no placement or seaming shall be attempted at ambient temperatures below 0 degrees C or above 40 degrees C. Ambient temperature shall be measured at a height no greater than 150 mm above the ground or geomembrane surface. If seaming is allowed below 0 degrees C, the procedures outlined in GSI GRI GM9 shall be followed. In marginal conditions, seaming shall cease unless destructive field seam tests, conducted by the QC laboratory, confirm that seam properties meet the requirements listed in Table 1. Tests shall be conducted in accordance with paragraph Destructive Field Seam Testing.

PART 2 PRODUCTS

2.1 MATERIALS

2.1.1 Raw Materials

Resin used in manufacturing geomembrane sheets shall be made of virgin uncontaminated ingredients. No more than 10 percent regrind, reworked, or trim material in the form of chips or edge strips shall be used to manufacture the geomembrane sheets. All regrind, reworked, or trim materials shall be from the same manufacturer and exactly the same formulation as the geomembrane sheet being produced. No post consumer materials or water-soluble ingredients shall be used to produce the geomembrane. For geomembranes with plasticizers, only primary plasticizers that are resistant to migration shall be used. Submit a copy of the test reports and QC certificates for materials used in the manufacturing of the geomembrane shipped to the site.

2.1.2 Sheet Materials

Geomembrane sheets shall be unreinforced and manufactured as wide as possible to minimize factory and field seams. Geomembrane sheets shall be uniform in color, thickness, and surface texture. The sheets shall be free of and resistant to fungal or bacterial attack and free of cuts, abrasions, holes, blisters, contaminants and other imperfections. Geomembrane sheets and factory seams shall conform to the requirements listed in Table 1 for Manufacturing Quality Control (MQC).

TABLE 1 - SMOOTH HDPE GEOMEMBRANE PROPERTIES			
PROPERTY	TEST VALUE	MQC TESTING FREQUENCY (MIN.)	TEST METHOD
Thickness (min ave)	1 mm	per roll	ASTM D5199
Lowest individual of 10 values	-10 percent	per roll	ASTM D5199
Density (min)	0.940 g/cc	per 90,000 kg	ASTM D1505
Tensile Properties(1)(min ave)		per 9,000 kg	ASTM D638 Type IV
yield stress	15 kN/m		
break stress	27 kN/m		
yield elong	12 percent		
break elong	700 percent		
Tear Resistance (min ave)	125 N	per 20,000 kg	ASTM D1004
Puncture Resistance(min ave)	320 N	per 20,000 kg	ASTM D4833/D4833M
Stress Crack Resistance (2)	200 hr	per 90,000 kg	ASTM D5397 (Appendix)
Carbon Black Content	2.0-3.0 percent	per 9,000 kg	ASTM D1603 (3)
Carbon Black Dispersion	Note (4)	per 20,000 kg	ASTM D5596
Oxidative Induction Time (OIT)(min ave)(5)		per 90,000 kg	
-Std OIT	100 min		ASTM D3895
-High Pres OIT	400 min		ASTM D5885
Oven Aging at 85 deg C (min ave) (5), (6)		per year and change in formulation	ASTM D5721

TABLE 1 - SMOOTH HDPE GEOMEMBRANE PROPERTIES			
PROPERTY	TEST VALUE	MQC TESTING FREQUENCY (MIN.)	TEST METHOD
Std OIT	55 percent at 90 days		ASTM D3895
or High Pres OIT	80 percent at 90 days		ASTM D5885
UV Resistance (min ave) (7)		per year and change in formulation	ASTM D7238
High Pres OIT(8)(9)	50 percent at 1600 hours		ASTM D5885

TABLE 1 NOTES	
MQC	Manufacturing Quality Control
Note (1)	Minimum average machine direction and minimum average cross machine direction values shall be based on 5 test specimens in each direction. For HDPE geomembrane, yield elongation is calculated using a gauge length of 33 mm. For HDPE geomembrane, break elongation is calculated using a gauge length of 50 mm. For LLDPE geomembrane, break elongation is calculated using a gage length of 50 mm at 50 mm/min.
Note (2)	For HDPE geomembrane, the yield stress used to calculate the applied load for test method ASTM D5397 (Appendix), shall be the manufacturer's mean value. ASTM D5397 does not need to be run on LLDPE geomembrane.
Note (3)	Other methods such as ASTM D4218 or microwave methods are acceptable if an appropriate correlation to ASTM D1603 can be established.
Note (4)	Carbon black dispersion for 10 different views: - minimum 8 of 10 in Categories 1 or 2 - all 10 in Categories 1,2, or 3
Note (5)	The manufacturer has the option to select either one of the OIT methods to evaluate the antioxidant content.
Note (6)	Evaluate samples at 30 and 60 days and compare with the 90 day response.
Note (7)	The condition of the test shall be a 20 hour UV cycle at 75 degrees C followed by a 4 hour condensation cycle at 60 degrees C.
Note (8)	The standard OIT test (ASTM D3895) shall not be used in determining UV resistance.

TABLE 1 NOTES	
Note (9)	UV resistance is based on percent retained value regardless of the original HP-OIT value.

TABLE 2 - HDPE SEAM PROPERTIES		
PROPERTY	TEST VALUE	TEST METHOD
Seam Shear Strength (min) (1)	14.0 kN/m	ASTM D6392
Seam Peel Strength (min) (1) (2)	8.4 kN/m	ASTM D6392
Note (1): Seam tests for peel and shear must fail in the Film Tear Bond mode. This is a failure in the ductile mode of one of the bonded sheets by tearing or breaking prior to complete separation of the bonded area.		
Note (2): Where applicable, both tracks of a double hot wedge seam shall be tested for peel adhesion.		

2.1.3 Factory Seams

Geomembrane sheets shall be factory seamed into maximum sized panels to minimize field seaming. Factory seaming shall be by methods approved by the geomembrane manufacturer. Seams shall meet the minimum shear and peel strength requirements shown in Table 2. Factory seams shall extend to the end of the sheet so that no unbonded edges greater than 3.2 mm wide are present.

2.2 TESTS, INSPECTIONS, AND VERIFICATIONS

2.2.1 Manufacturing, Sampling, and Testing

2.2.1.1 Raw Materials

Raw materials shall be tested in accordance with the approved MQC manual. Any raw material which fails to meet the geomembrane manufacturer's specified physical properties shall not be used in manufacturing the sheet. Seaming rods and pellets shall be manufactured of materials which are essentially identical to that used in the geomembrane sheet. Seaming rods and pellets shall be tested for density, melt index and carbon black content in accordance with the approved MQC manual. Seaming rods and pellets which fail to meet the corresponding property values required for the sheet material, shall not be used for seaming.

2.2.1.2 Sheet Material

Geomembrane sheets shall be tested in accordance with the approved MQC manual. As a minimum, MQC testing shall be conducted at the frequencies shown in Table 1. Sheets not meeting the minimum requirements specified in Table 1 shall not be sent to the site.

2.3 EQUIPMENT

Equipment used in performance of the work shall be in accordance with the geomembrane manufacturer's recommendations and shall be maintained in

satisfactory working condition.

PART 3 EXECUTION

3.1 PREPARATION

3.1.1 Surface Preparation

Surface preparation shall be performed in accordance with Section 31 05 20 GEOSYNTHETIC DRAINAGE LAYER. Each day during placement of geomembrane, the Contracting Officer and installer shall inspect the surface on which geomembrane is to be placed and certify in writing that the surface is acceptable. Repairs to the subgrade shall be performed at no additional cost to the Government.

3.2 GEOMEMBRANE DEPLOYMENT

The procedures and equipment used shall not elongate, wrinkle, scratch, or otherwise damage the geomembrane, other geosynthetic layers, or the underlying subgrade. Geomembrane damaged during installation shall be replaced or repaired, at the Contracting Officer's discretion. Only geomembrane panels that can be anchored and seamed together the same day shall be deployed. Adequate ballast (i.e., sand bags) shall be placed on the geomembrane, without damaging the geomembrane, to prevent uplift by wind. No equipment shall be operated on the top surface of the geomembrane without permission from the Contracting Officer. Seams shall be oriented parallel to the line of maximum slope. Where seams can only be oriented across the slope, the upper panel shall be lapped over the lower panel. The methods used to deploy and backfill over the geomembrane shall minimize wrinkles and tensile stresses in the geomembrane. The geomembrane shall have adequate slack to prevent the creation of tensile stress. The wrinkle height to width ratio for installed geomembrane shall not exceed 0.5. In addition, geomembrane wrinkles shall not exceed 150 mm in height. Wrinkles that do not meet the above criteria shall be cut out and repaired in accordance with the installer's approved QC manual.

3.3 FIELD SEAMING

3.3.1 Trial Seams

Trial seams shall be made under field conditions on strips of excess geomembrane. Trial seams shall be made each day prior to production seaming, whenever there is a change in seaming personnel or seaming equipment and at least once every four hours, by each seamer and each piece of seaming equipment used that day. Trial seam samples shall be collected and tested in accordance with ASTM D6392. One sample shall be obtained from each trial seam. This sample shall be at least 900 mm long by 300 mm wide with the seam centered lengthwise. Ten random specimens 25 mm wide shall be cut from the sample. Five seam specimens shall be field tested for shear strength and 5 seam specimens shall be field tested for peel adhesion using an approved quantitative tensiometer. Where necessary, accelerated curing of trial seams made by chemical methods shall be conducted in accordance with GSI GRI GM7. To be acceptable, 4 out of 5 replicate test specimens shall meet seam strength requirements specified in Table 2. If the field tests fail to meet these requirements, the entire operation shall be repeated. If the additional trial seam fails, the seaming apparatus or seamer shall not be used until the deficiencies are corrected by the installer and 2 consecutive successful trial seams are achieved.

3.3.2 Field Seams

Panels shall be seamed in accordance with the geomembrane manufacturer's recommendations. In sumps, corners and odd-shaped geometric locations, the number of field seams shall be minimized. Seaming shall extend to the outside edge of panels. Soft subgrades shall be compacted and approved prior to seaming. The seam area shall be free of moisture, dust, dirt, and foreign material at the time of seaming. Fish mouths in seams shall be repaired.

3.4 SAMPLES

One QC sample, 500 mm in length, for the entire width of a roll, shall be obtained for every 9,000 square meters of material delivered to the site. Samples shall not be obtained from the first three feet of the roll. For accordion folded geomembranes, samples of equivalent size shall be collected from approved locations. The samples shall be identified by manufacturer's name, product identification, lot and roll/panel number. The date, a unique sample number, and the machine direction shall also be noted. In addition, a 300 by 300 mm QA sample shall be collected, labeled, and submitted to the Contracting Officer each time QC samples are collected.

3.5 TESTS

Provide all QC samples to the QC laboratory to determine density, thickness, tensile strength at break, and elongation at break in accordance with the methods specified in Table 1. Samples not meeting the specified requirements shall result in the rejection of applicable rolls/panels. As a minimum, rolls/panels produced immediately prior to and immediately after the failed roll/panel shall be tested for the same failed parameter. Testing shall continue until a minimum of three successive rolls/panels on both sides of the original failing roll/panel pass the failed parameter.

3.5.1 Non-Destructive Field Seam Continuity Testing

Field seams shall be non-destructively tested for continuity over their full length in accordance with the installer's approved QC manual. Seam testing shall be performed as the seaming work progresses, not at the completion of field seaming. Any seams which fail shall be documented and repaired in accordance with the installer's approved QC manual.

3.5.2 Destructive Field Seam Testing

A minimum of one destructive test sample per 230 m of field seam shall be obtained at locations specified by the Contracting Officer. Sample locations shall not be identified prior to seaming. Samples shall be a minimum of 300 mm wide by 1.1 m long with the seam centered lengthwise. Each sample shall be cut into 3 equal pieces, with one piece retained by the installer, one piece given to the QC laboratory, and the remaining piece given to the Contracting Officer for QA testing and/or permanent record. Each sample shall be numbered and cross referenced to a field log which identifies: (1) panel number; (2) seam number; (3) date and time cut; (4) ambient temperature within 150 mm above the geomembrane; (5) seaming unit designation; (6) name of seamer; and (7) seaming apparatus temperature and pressures (where applicable). Ten 25 mm wide replicate specimens shall be cut from the installer's sample. Five specimens shall

be tested for shear strength and 5 for peel adhesion using an approved field quantitative tensiometer. Jaw separation speed shall be in accordance with the approved QC manual. To be acceptable, 4 out of 5 replicate test specimens shall meet the seam strength requirements specified in Table 2. If the field tests pass, 5 specimens shall be tested at the QC laboratory for shear strength and 5 for peel adhesion in accordance with the QC laboratory's approved procedures. To be acceptable, 4 out of 5 replicate test specimens shall meet the seam strength requirements specified in Table 2. If the field or laboratory tests fail, the seam shall be repaired in accordance with paragraph Destructive Seam Test Repairs. Holes for destructive seam samples shall be repaired the same day they are cut.

3.6 DEFECTS AND REPAIRS

3.6.1 Destructive Seam Test Repairs

Seams that fail destructive seam testing may be overlaid with a strip of new material and seamed (cap stripped). Alternatively, the seaming path shall be retraced to an intermediate location a minimum of 3 m on each side of the failed seam location. At each location a 300 by 450 mm minimum size seam sample shall be taken for 2 additional shear strength and 2 additional peel adhesion tests using an approved quantitative field tensiometer. If these tests pass, then the remaining seam sample portion shall be sent to the QC laboratory for 5 shear strength and 5 peel adhesion tests in accordance with the QC laboratory's approved procedures. To be acceptable, 4 out of 5 replicate test specimens must meet specified seam strength requirements. If these laboratory tests pass, then the seam shall be cap stripped or repaired using other approved methods between that location and the original failed location. If field or laboratory tests fail, the process shall be repeated. After repairs are completed, the repaired seam shall be non-destructively tested in accordance with paragraph Non-Destructive Field Seam Continuity Testing.

3.6.2 Patches

Tears, holes, blisters and other defects shall be repaired with patches. Patches shall have rounded corners, be made of the same geomembrane, and extend a minimum of 150 mm beyond the edge of defects. Minor localized flaws shall be repaired by spot welding or seaming as determined by the QC inspector. Repairs shall be non-destructively tested. The Contracting Officer or the QC inspector may also elect to perform destructive seam tests on suspect areas.

3.7 VISUAL INSPECTION AND EVALUATION

Immediately prior to covering, the geomembrane, seams, and non-seam areas shall be visually inspected by the QC inspector and Contracting Officer for defects, holes, or damage due to weather conditions or construction activities. At the Contracting Officer's or the QC inspector's discretion, the surface of the geomembrane shall be brushed, blown, or washed by the installer if the amount of dust, mud, or foreign material inhibits inspection or functioning of the overlying material. Each suspect location shall be non-destructively tested in accordance with paragraph Non-Destructive Field Seam Continuity Testing. Each location that fails non-destructive testing shall be repaired in accordance with paragraph Patches and non-destructively retested.

3.8 PENETRATIONS

Geomembrane penetration details shall be as indicated. Use factory fabricated boots wherever possible. Non-destructively test field seams for penetrations in accordance with the installer's approved QC manual. Repair seams that fail non-destructive testing in accordance with the installer's approved QC manual and non-destructively tested prior to acceptance.

3.9 PROTECTION AND BACKFILLING

The deployed and seamed geomembrane shall be covered with the specified material within 14 calendar days of acceptance. Wrinkles in the geomembrane shall be prevented from folding over during placement of cover materials. Cover soil shall not be dropped onto the geomembrane or overlying geosynthetics from a height greater than 1 m. Care shall be taken to protect the geomembrane from damage during placement of items specified in Section 03 30 00 CAST-IN-PLACE CONCRETE.

-- End of Section --

SECTION 02 61 13

EXCAVATION AND HANDLING OF CONTAMINATED MATERIAL
02/10

PART 1 GENERAL

1.1 MEASUREMENT AND PAYMENT

1.1.1 Measurement

Measurement for excavation and onsite transportation shall be based on the actual number of cubic meters of contaminated material in-place prior to excavation. Determination of the volume of contaminated material excavated shall be based on cross-sectional volume determination reflecting the differential between the original elevations of the top of the contaminated material and the final elevations after removal of the contaminated material. Measurement for backfilling of excavated areas shall be based on in-place cubic meters of compacted fill. Measurement for construction of stockpile areas shall be based on the number of square meters of stockpile liner constructed.

1.1.2 Payment

1.1.2.1 Excavation and Transportation

Compensation for excavation and onsite transportation of contaminated material will be paid as a unit cost. This unit cost shall include any other items incidental to excavation and handling not defined as having a specific unit cost.

1.1.2.2 Backfilling

Compensation for backfill soil, transportation of backfill, backfill soil conditioning, backfilling, compaction, and geotechnical testing will be paid as a single unit cost.

1.1.2.3 Stockpiling

Compensation for construction of stockpile areas will be paid for as a unit cost. This unit cost shall include all aspects of grading, preparation, handling, placement, maintenance, removal, treatment, and disposal of stockpile cover materials and liner materials and all other items incidental to construction of stockpiles.

1.2 REFERENCES

The publications listed below form a part of this specification to the extent referenced. The publications are referred to within the text by the basic designation only.

ASTM INTERNATIONAL (ASTM)

ASTM D5434	(2012) Field Logging of Subsurface Explorations of Soil and Rock

U.S. ARMY CORPS OF ENGINEERS (USACE)

EM 385-1-1	(2014) Safety and Health Requirements Manual

U.S. NATIONAL ARCHIVES AND RECORDS ADMINISTRATION (NARA)

29 CFR 1926	Safety and Health Regulations for Construction
40 CFR 302	Designation, Reportable Quantities, and Notification

1.3 DESCRIPTION OF WORK

The work consists of excavation and temporary storage of contaminated material. Approximate locations of contaminated material are shown on the drawings. Subsurface conditions are shown on the drawings. Submit a Work Plan as specified below. Notify the Contracting Officer within 24 hours, and before excavation, if contaminated material is discovered that has not been previously identified or if other discrepancies between data provided and actual field conditions are discovered. Backfill material is not available onsite. Ground water is approximately 3 meters below pre-excavation ground surface.

1.3.1 Scheduling

Notify the Contracting Officer 14 calendar days prior to the start of excavation of contaminated material. The Contractor shall be responsible for contacting regulatory agencies in accordance with the applicable reporting requirements.

1.3.2 Work Plan

Submit a Work Plan within 30 calendar days after notice to proceed. No work at the site, with the exception of site inspections and surveys, shall be performed until the Work Plan is approved. Allow 30 calendar days in the schedule for the Government's review. No adjustment for time or money will be made if resubmittals of the Work Plan are required due to deficiencies in the plan. At a minimum, the Work Plan shall include:

a. Schedule of activities.

b. Method of excavation and equipment to be used.

c. Shoring or side-wall slopes proposed.

d. Dewatering plan.

e. Storage methods and locations for liquid and solid contaminated material.

f. Borrow sources and haul routes.

g. Decontamination procedures.

h. Spill contingency plan.

1.3.3 Other Submittal Requirements

Submit separate cross-sections of each area before and after excavation and after backfilling, test results, and five copies of the Closure Report within 14 calendar days of work completion at the site.

1.4 SUBMITTALS

Government approval is required for submittals with a "G" designation; submittals not having a "G" designation are for Contractor Quality Control approval. Submittals with an "S" are for inclusion in the Sustainability Notebook, in conformance to Section 01 33 29 SUSTAINABILITY REPORTING. Submit the following in accordance with Section 01 33 00 SUBMITTAL PROCEDURES:

SD-02 Shop Drawings

Surveys

SD-03 Product Data

Work Plan; G
Closure Report; G

SD-06 Test Reports

Surveys
Confirmation Sampling and Analysis
Sampling of Stored Material; G
Sampling Liquid; G

1.5 REGULATORY REQUIREMENTS

1.5.1 Permits and Licenses

Obtain required federal, state, and local permits for excavation and storage of contaminated material. Permits shall be obtained at no additional cost to the Government.

PART 2 PRODUCTS

2.1 SPILL RESPONSE MATERIALS

Provide appropriate spill response materials including, but not limited to the following: containers, adsorbents, shovels, and personal protective equipment. Spill response materials shall be available at all times when contaminated materials/wastes are being handled or transported. Spill response materials shall be compatible with the type of materials and contaminants being handled.

PART 3 EXECUTION

3.1 SURVEYS

Perform surveys immediately prior to and after excavation of contaminated material to determine the volume of contaminated material removed. Also, perform surveys immediately after backfill of each excavation. Provide cross-sections on 7.6 meter intervals and at break points for all excavated areas. Locations of confirmation samples shall also be surveyed

and shown on the drawings.

3.2 EXISTING STRUCTURES AND UTILITIES

No excavation shall be performed until site utilities have been field located. Take the necessary precautions to ensure no damage occurs to existing structures and utilities. Damage to existing structures and utilities resulting from the Contractor's operations shall be repaired at no additional cost to the Government. Utilities encountered that were not previously shown or otherwise located shall not be disturbed without approval from the Contracting Officer.

3.3 CONTAMINATED MATERIAL REMOVAL

3.3.1 Excavation

Areas of contamination shall be excavated to the depth and extent shown on the drawings and not more than 60 mm beyond the depth and extent shown on the drawings unless directed by the Contracting Officer. Excavation shall be performed in a manner that will limit spills and the potential for contaminated material to be mixed with uncontaminated material. An excavation log describing visible signs of contamination encountered shall be maintained for each area of excavation. Excavation logs shall be prepared in accordance with ASTM D5434.

3.3.2 Shoring

If workers must enter the excavation, it shall be evaluated, shored, sloped or braced as required by EM 385-1-1 and 29 CFR 1926 section 650.

3.3.3 Dewatering

Surface water shall be diverted to prevent entry into the excavation. Dewatering shall be limited to that necessary to assure adequate access, a safe excavation, prevent the spread of contamination, and to ensure that compaction requirements can be met.

3.4 CONFIRMATION SAMPLING AND ANALYSIS

The Contracting Officer shall be present to inspect the removal of contaminated material from each site. After all material suspected of being contaminated has been removed, the excavation shall be examined for evidence of contamination. If the excavation appears to be free of contamination, field analysis shall be used to determine the presence of contamination using a real time vapor monitoring instrument . Excavation of additional material shall be as directed by the Contracting Officer. After all suspected contaminated material is removed, confirmation samples shall be collected and analyzed for the following contaminants:

Samples shall be collected at a frequency specified by the Base Environmental Engineer or as directed by the Contracting Officer. A minimum of one sample shall be collected from the bottom of the excavation. Based on test results, propose any additional excavation which may be required to remove material which is contaminated above action levels. Additional excavation shall be subject to approval by the Contracting Officer. Locations of samples shall be marked in the field and documented on the as-built drawings.

3.5 CONTAMINATED MATERIAL STORAGE

Material shall be placed in temporary storage immediately after excavation. The following paragraphs describe acceptable methods of material storage. Storage units shall be in good condition and constructed of materials that are compatible with the material or liquid to be stored. If multiple storage units are required, each unit shall be clearly labeled with an identification number and a written log shall be kept to track the source of contaminated material in each temporary storage unit.

3.5.1 Stockpiles

Stockpiles shall be constructed to isolate stored contaminated material from the environment. Stockpiles shall be constructed to include:

a. A chemically resistant geomembrane liner free of holes and other damage. Non-reinforced geomembrane liners shall have a minimum thickness of 0.5 mm. Scrim reinforced geomembrane liners shall have a minimum weight of 20 kg/100 square m. The ground surface on which the geomembrane is to be placed shall be free of rocks greater than 13 mm in diameter and any other object which could damage the membrane.

b. Geomembrane cover free of holes or other damage to prevent precipitation from entering the stockpile. Non-reinforced geomembrane covers shall have a minimum thickness of 0.25 mm. Scrim reinforced geomembrane covers shall have a minimum weight of 13 kg/100 square m. The cover material shall be extended over the berms and anchored or ballasted to prevent it from being removed or damaged by wind.

c. Berms surrounding the stockpile, a minimum of 300 mm in height. Vehicle access points shall also be bermed.

d. The liner system shall be sloped to allow collection of leachate. Storage and removal of liquid which collects in the stockpile, in accordance with paragraph Liquid Storage.

3.5.2 Roll-Off Units

Roll-off units used to temporarily store contaminated material shall be water tight. A cover shall be placed over the units to prevent precipitation from contacting the stored material. Liquid which collects inside the units shall be removed and stored in accordance with paragraph Liquid Storage.

3.5.3 Liquid Storage

Liquid collected from excavations and stockpiles shall be temporarily stored in 220 L barrels. Liquid storage containers shall be water-tight and shall be located as directed by the Contracting Officer.

3.6 SAMPLING

3.6.1 Sampling of Stored Material

Samples of stored material shall be collected as directed by the Base Environmental Engineer. Samples shall be tested for the following:

Stored material with contaminant levels that exceed the action levels shall be treated offsite. Analyses for contaminated material to be taken

to an offsite treatment facility shall conform to local, state, and federal criteria as well as to the requirements of the treatment facility. Documentation of all analyses performed shall be furnished to the Contracting Officer. Additional sampling and analyses to the extent required by the approved offsite treatment, storage or disposal (TSD) facility shall be the responsibility of the Contractor and shall be performed at no additional cost to the Government.

3.6.2 Sampling Liquid

Liquid collected from excavations or storage areas shall be sampled as directed by the Base Environmental Engineer.

Liquid with contaminant levels that exceed action levels shall be treated offsite. Analyses for contaminated liquid to be taken to an offsite treatment facility shall conform to local, state, and federal criteria as well as to the requirements of the treatment facility. Documentation of all analyses performed shall be furnished to the Contracting Officer. Additional sampling and analysis to the extent required by the approved offsite treatment, storage or disposal (TSD) facility receiving the material shall be the responsibility of the Contractor and shall be performed at no additional cost to the Government.

3.7 SPILLS

In the event of a spill or release of a hazardous substance (as designated in 40 CFR 302), pollutant, contaminant, or oil (as governed by the Oil Pollution Act (OPA), 33 U.S.C. 2701 et seq.), notify the Contracting Officer immediately. If the spill exceeds the reporting threshold, follow the pre-established procedures as described in the Base Wide Contingency Plan for immediate reporting and containment. Immediate containment actions shall be taken to minimize the effect of any spill or leak. Cleanup shall be in accordance with applicable federal, state, and local regulations. As directed by the Contracting Officer, additional sampling and testing shall be performed to verify spills have been cleaned up. Spill cleanup and testing shall be done at no additional cost to the Government.

3.8 BACKFILLING

Backfilling shall be performed in accordance with Section 31 23 00.00 20 EXCAVATION AND FILL.

3.8.1 Confirmation Test Results

Excavations shall be backfilled immediately after all contaminated materials have been removed and confirmation test results have been approved. Backfill shall be placed and compacted to the lines and grades shown on the drawings.

3.9 DISPOSAL REQUIREMENTS

Offsite disposal of contaminated material shall be in accordance with instructions from the Base Environmental Engineer and the Contracting Officer.

3.10 CLOSURE REPORT

Submit five copies of a Closure Report within 14 calendar days of

completing work at the site. The report shall be labeled with the contract number, project name, location, date, name of general Contractor, and the Corps of Engineers District contracting for the work. The Closure Report shall include the following information as a minimum:

a. A cover letter signed by a responsible company official certifying that all services involved have been performed in accordance with the terms and conditions of the contract documents and regulatory requirements.

b. A narrative report including, but not limited to, the following:

(1) site conditions, ground water elevation, and cleanup criteria;

(2) excavation logs;

(3) field screening readings;

(4) quantity of materials removed from each area of contamination;

(5) quantity of water/product removed during dewatering;

(6) sampling locations and sampling methods;

(7) sample collection data such as time of collection and method of preservation;

(8) sample chain-of-custody forms; and

(9) source of backfill.

c. Copies of all chemical and physical test results.

d. Copies of all manifests and land disposal restriction notifications.

e. Copies of all certifications of final disposal signed by the responsible disposal facility official.

f. Waste profile sheets.

g. Scale drawings showing limits of each excavation, limits of contamination, known underground utilities within 15 m of excavation, sample locations, and sample identification numbers. On-site stockpile, storage, treatment, loading, and disposal areas shall also be shown on the drawings.

h. Progress Photographs. Color photographs shall be used to document progress of the work. A minimum of four views of the site showing the location of the area of contamination, entrance/exit road, and any other notable site conditions shall be taken before work begins. After work has been started, activities at each work location shall be photographically recorded weekly. Photographs shall be a minimum of 76.2 by 127.0 mm and shall include:

(1) Soil removal and sampling.

(2) Dewatering operations.

(3) Unanticipated events such as spills and the discovery of

additional contaminated material.

(4) Contaminated material/water storage, handling, treatment, and transport.

(5) Site or task-specific employee respiratory and personal protection.

(6) Fill placement and grading.

(7) Post-construction photographs. After completion of work at each site, take a minimum of four views of each excavation site.

A digital version of all photos shown in the report shall be included with the Closure Report. Photographs shall be a minimum of 76 by 127 mm and shall be mounted back-to-back in double face plastic sleeves punched to fit standard three ring binders. Each print shall have an information box attached. The box shall be typewritten and arranged as follows:

Project Name:	Direction of View:
Location:	Date/Time:
Photograph No.:	Description of View:

-- End of Section --

SECTION 03 11 19.00 10

INSULATING CONCRETE FORMING
05/14

PART 1 GENERAL

1.1 REFERENCES

The publications listed below form a part of this specification to the extent referenced. The publications are referred to within the text by the basic designation only.

AMERICAN CONCRETE INSTITUTE INTERNATIONAL (ACI)

ACI 117	(2010; Errata 2011) Specifications for Tolerances for Concrete Construction and Materials and Commentary
ACI 301	(2010; Errata 2011) Specifications for Structural Concrete
ACI 305R	(2010) Guide to Hot Weather Concreting
ACI 306R	(2010) Guide to Cold Weather Concreting
ACI 318	(2014; Errata 1-2 2014) Building Code Requirements for Structural Concrete and Commentary

ASTM INTERNATIONAL (ASTM)

ASTM C177	(2013) Standard Test Method for Steady-State Heat Flux Measurements and Thermal Transmission Properties by Means of the Guarded-Hot-Plate Apparatus
ASTM C203	(2005; R 2012) Breaking Load and Flexural Properties of Block-Type Thermal Insulation
ASTM C518	(2010) Steady-State Thermal Transmission Properties by Means of the Heat Flow Meter Apparatus
ASTM C578	(2014a) Standard Specification for Rigid, Cellular Polystyrene Thermal Insulation
ASTM D1621	(2010) Compressive Properties of Rigid Cellular Plastics
ASTM D1622/D1622M	(2014) Apparent Density of Rigid Cellular Plastics
ASTM D7611/D7611M	(2013; E 2014) Standard Practice for Coding Plastic Manufactured Articles for Resin Identification

ASTM E119	(2014) Standard Test Methods for Fire Tests of Building Construction and Materials
ASTM E2129	(2010) Standard Practice for Data Collection for Sustainability Assessment of Building Products
ASTM E2634	(2011) Standard Specification for Flat Wall Insulating Concrete Form (ICF) Systems
ASTM E84	(2014) Standard Test Method for Surface Burning Characteristics of Building Materials
ASTM E90	(2009) Standard Test Method for Laboratory Measurement of Airborne Sound Transmission Loss of Building Partitions and Elements

1.2 SUBMITTALS

Government approval is required for submittals with a "G" designation; submittals not having a "G" designation are for Contractor Quality Control approval. Submittals with an "S" are for inclusion in the Sustainability Notebook, in conformance to Section 01 33 29 SUSTAINABILITY REPORTING. Submit the following in accordance with Section 01 33 00 SUBMITTAL PROCEDURES:

SD-03 Product Data

Insulating Concrete Form; G

Environmental Data; S
Accessories; G

SD-06 Test Reports

ICC ES Evaluation Report

SD-07 Certificates

3rd Party Agency Certification; G

SD-08 Manufacturer's Instructions

Installation; G

SD-10 Operation and Maintenance Data

Plastic Identification

1.3 QUALITY ASSURANCE

1.3.1 Insulation Concrete Form (ICF) Manufacturer Qualification

Manufacturer who has been successfully producing ICF products for a period of not less than 5 years and who has experience similar to this project in size, scope and complexity. Manufacturer must have an ICC-ES Evaluation Report or certification showing conformance to ASTM E2634 as evidence that

the Insulating Concrete Forming (ICF) units are code-compliant.

1.3.2 Installer Qualification

Installer must be trained by the ICF manufacturer or an ICF Technical Advisor to ensure product is installed in accordance with the manufacturer's published installation instructions. Installer must have experience in ICF wall systems and successfully completed at least three projects that are similar to this project in size, scope and complexity.

1.3.3 Pre-Installation Meetings

Prior to commencement of ICF installation and associated work, conduct a meeting at project site with the Contracting Officer, ICF manufacturer's representative, and trades responsible for installing forms, concrete, and reinforcement.

1.4 DELIVERY, STORAGE, AND HANDLING

Deliver products in original factory packaging, bearing listing and labeling identification of product, manufacturer and lot number. Handle and store products in location to prevent physical damage and soiling. Ensure that UV protection is provided for material stored on site beyond 30 days.

1.5 FIELD/SITE CONDITIONS

Conform to ACI 305R and ACI 306R for hot and cold weather concreting requirements.

1.6 SUSTAINABLE DESIGN REQUIREMENTS

1.6.1 Environmental Data

Submit manufacturer's descriptive data. Documentation indicating percentage of post-industrial and post-consumer recycled content per unit of product. Indicate relative dollar value of recycled content products to total dollar value of products included in project. Submit Table 1 of ASTM E2129 for the following products: concrete and plastics.

1.6.2 Plastic Identification

Verify that plastic products to be incorporated into the project are labeled in accordance with ASTM D7611/D7611M. Where products are not labeled, provide product data indicating polymeric information in the Operation and Maintenance Manual and in accordance with Section 01 78 23 OPERATION AND MAINTENANCE DATA.

Type 1	Polyethylene Terephthalate (PET, PETE)
Type 2	High Density Polyethylene (HDPE)
Type 3	Vinyl (Polyvinyl Chloride or PVC)
Type 4	Low Density Polyethylene (LDPE)

Type 5	Polypropylene (PP)
Type 6	Polystyrene (PS)
Type 7	Other. Use of this code indicates that the package in question is made with a resin other than the six listed above, or is made of more than one resin listed above, and used in a multi-layer combination. Provide the package make up.

PART 2 PRODUCTS

2.1 SYSTEM DESCRIPTION

The ICFwall system consists of two panels of molded expanded polystyrene (EPS) insulation connected by cross ties to act as permanent formwork for cast-in-place reinforced concrete beams, lintels, non-load-bearing walls, load-bearing walls, foundation walls, and retaining walls while provide insulating characteristics.

2.1.1 Design Requirements

Design, engineer, and construct the ICF wall system in accordance with the manufacturer's instructions for anticipated loads, lateral pressures, and stresses, and capable of withstanding the pressures resulting from placement and vibration of concrete. Monitor the adequacy of design and construction prior to and during concrete placement as part of the approved Quality Control Plan.

2.1.2 Performance Requirements

The Insulating Concrete Form (ICF) wall system must provide a minimum 305 mm nominal wall width; not less than 12 mm less nor 6 mm more than the nominal width indicated. Provide cross ties in the ICF wall system at 200 mm on center maximum with a tolerance of plus or minus 6 mm. ICF wall system must have vertical fastening strips 25 mm minimum flange width that align vertically within 12 mm horizontally between stacked blocks or panels for the full height of the wall to fasten exterior and interior wall finishes. Vertical gap between fastening strips of stacked blocks or panels must not exceed 38 mm. Space fastening strips at a maximum of 405 mm on center horizontally with a tolerance of plus or minus 6 mm. Wall system must provide accurate positioning of concrete reinforcing bars within the form cavity conforming to ACI 318. Submit manufacturer's literature describing product, materials, installation procedure and accessories.

2.2 MANUFACTURED UNITS

2.2.1 Description

The ICF wall system includes an expanded polystyrene forming unit used to construct a monolithic reinforced concrete wall. The forms remain in place, providing a concrete wall to be finished with conventional interior and exterior wall coverings. Provide form unit types and sizes as determined by the ICF manufacturer to provide walls indicated. Provide form materials in accordance with the manufacturer, other specifications herein, and the following:

2.2.2 Performance/Design Criteria

With the ICF wall system provide a minimum 165 mm concrete "flat" cross section. Use preformed forms with interlocking edges to facilitate course-to-course bonding to prevent uplift and lateral failure. Provide manufacturer form unit types for straight, 90 degree corners, 45 degree corners, brick ledges, and tapered top forms. ICF unit shall provide a minimum R-value of R-22 as tested in accordance with Test Method ASTM C518/ ASTM C177. EPS must provide a maximum vapor permeation of 0.09 perm-meter. Finish wall assembly shall have a minimum rating of Sound Transmission Class (STC) 50 sound attenuation performance as tested in accordance with Test Method ASTM E90. The fire resistive-rated construction of the complete ICF wall assembly including EPS, cross tie material, and concrete must be in accordance with Test Methods ASTM E119.

Conform the Insulating Concrete Forming System to the following minimum requirements:

TABLE 1 - PROPERTIES

Properties	ASTM Test	Value
Density	ASTM D1622/D1622M	24 kg/m3
Thermal Resistance	ASTM C177	0.275 m2.C/W per cm (min)
Compressive Strength	ASTM D1621	103 kPa
Flexural Strength	ASTM C203	276 kPa (min.)
Flame Spread	ASTM E84	25 maximum
Smoke Developed	ASTM E84	450 maximum

2.3 MATERIALS

Submit 3rd party agency certification stating that product supplied meets the requirements of ASTM E2634.

2.3.1 Expanded Polystyrene (EPS)

Expanded Polystyrene must conform to ASTM C578. Provide Type II EPS panels, Flame Resistant with 63 mm thick minimum EPS panels.

2.3.2 Cross Ties and Fastening Strips

Use plastic or metal cross ties spaced at 200 mm on center maximum with a tolerance of plus or minus 6 mm. Cross ties must allow for multiple reinforcement placement positions to meet the structural design. Provide fastening strips with 25 mm minimum flange width that align vertically within 12 mm horizontally between stacked blocks or panels for the full height of the wall to fasten exterior and interior wall finishes. Vertical gap between fastening strips of stacked blocks or panels must not exceed 38 mm. Space fastening strips at a maximum of 400 mm on center horizontally with a tolerance of plus or minus 6 mm. Recess the fastening strips 13 mm below the outside surface of the panels. Clearly mark the

flanges on the surface of the EPS panels. Provide a fastening strip in the corners of corner forms.

2.4 ACCESSORIES

2.4.1 Bracing, Scaffolding, and Wall Alignment

Support ICF wall system prior to the attachment of permanent structural elements to protect the ICF components from damage during construction.

2.4.2 Door and Window Bucks

Use extruded vinyl, pressure treated wood, or metal buck material to frame door and window openings.

2.4.3 Fasteners

Fasteners of interior and exterior wall finishes to ICF wall system must conform to ASTM E2634. Use corrosion-resistant fasteners of sufficient length to penetrate the flanges of the fastening strips.

PART 3 EXECUTION

3.1 EXAMINATION

Verify that footings and slabs are installed level and true to the structural design. Ensure dimensions and steel reinforcement are as indicated.

3.2 PREPARATION

Clean top of footings and slabs of all foreign substances, frost, ice, and standing or running water prior to starting installation of ICF wall system. Use methods and materials approved by ICF manufacturer.

3.3 INSTALLATION

Install ICF wall system in accordance with the manufacturer's installation and technical manual; submit a copy of the manual. In accordance with ACI 301, provide bracing and shoring to ensure stability of formwork to prevent overstressing of ICF units due to construction loads. Install ICF wall system in running bond pattern. Anchor formwork to supporting surfaces to prevent lateral movement of the ICF units during concrete placement. Place sleeves, inserts, anchors, and embedded items required for adjoining work or for support of adjoining work before concrete placement. Align fastener strips to facilitate interior and exterior wall finishes. Install concrete reinforcement according to the structural drawings at all walls, lintels, beams, and around openings. Install window and door bucks at each location where an opening is required. Install the first ICF course on the footing in accordance with the manufacturer's instructions to ensure that base of wall does not become misaligned during concrete placement. Install alignment bracing around the entire wall of the structure to ensure the ICF wall system is straight and plumb before and during concrete placement.

3.3.1 ICF Wall System Length

Within plus or minus 4.2 mm per m of the intended length.

3.3.2 ICF Wall System Height

Within plus or minus 1.6 mmm per m of the intended height.

3.4 CONCRETE PLACEMENT

Before placing concrete, verify that installation of formwork, reinforcement, and embedded items is complete and that required inspections have been performed. Deposit concrete in horizontal layers of depth to not exceed formwork design pressures. If concrete cannot be placed in continuous pour, provide construction joints as approved by the Designer of Record. Consolidate placed concrete in accordance with the manufacturer's instructions. Where no guidance is provided, consolidate placed concrete with mechanical vibrating equipment conforming to ACI 301. Variations from plumb and designated building lines cannot exceed the tolerances specified in ACI 117.

3.5 FIELD QUALITY CONTROL

The ICF manufacturer's representative or technical advisor must provide on-site training to installer to ensure familiarity of ICF manufacturer's installation procedures and technical manual. Inspect erected formwork, reinforcement placement, door and window opening construction, concrete placement, and alignment and bracing system to ensure that work is in accordance with drawings. Installer to ensure that the cast-in-place concrete walls are level, plumb, square, and straight and that all dimensions conform to the drawings and are within required tolerances. Notify the Contracting Officer in writing of defective forms within 7 working days of the date of ICF inspection.

3.6 CLEANING

Clean formed cavities, within ICF units, of debris and foreign matter prior to concrete placement. Clean up and properly dispose of all debris remaining on job site related to the installation of the ICF wall system, recycling materials as required.

3.7 PROTECTION

Provide temporary coverage of installation of ICF wall system to reduce exposure to ultraviolet light should final finish application be delayed longer than 60 days.

-- End of Section --

THIS PAGE HAS BEEN INTENTIONALLY LEFT BLANK

SECTION 03 30 00

CAST-IN-PLACE CONCRETE
05/14

PART 1 GENERAL

1.1 REFERENCES

The publications listed below form a part of this specification to the extent referenced. The publications are referred to within the text by the basic designation only.

AMERICAN CONCRETE INSTITUTE INTERNATIONAL (ACI)

ACI 117	(2010; Errata 2011) Specifications for Tolerances for Concrete Construction and Materials and Commentary
ACI 121R	(2008) Guide for Concrete Construction Quality Systems in Conformance with ISO 9001
ACI 211.1	(1991; R 2009) Standard Practice for Selecting Proportions for Normal, Heavyweight and Mass Concrete
ACI 301	(2010; Errata 2011) Specifications for Structural Concrete
ACI 302.1R	(2004; Errata 2006; Errata 2007) Guide for Concrete Floor and Slab Construction
ACI 304.2R	(1996; R 2008) Placing Concrete by Pumping Methods
ACI 304R	(2000; R 2009) Guide for Measuring, Mixing, Transporting, and Placing Concrete
ACI 305R	(2010) Guide to Hot Weather Concreting
ACI 306.1	(1990; R 2002) Standard Specification for Cold Weather Concreting
ACI 306R	(2010) Guide to Cold Weather Concreting
ACI 308.1	(2011) Specification for Curing Concrete
ACI 318	(2014; Errata 1-2 2014) Building Code Requirements for Structural Concrete and Commentary
ACI 347	(2004; Errata 2008; Errata 2012) Guide to Formwork for Concrete
ACI SP-15	(2011) Field Reference Manual: Standard Specifications for Structural Concrete ACI 301-05 with Selected ACI References

ACI SP-2	(2007; Abstract: 10th Edition) ACI Manual of Concrete Inspection
ACI SP-66	(2004) ACI Detailing Manual

AMERICAN HARDBOARD ASSOCIATION (AHA)

AHA A135.4	(1995; R 2004) Basic Hardboard

AMERICAN WELDING SOCIETY (AWS)

AWS D1.4/D1.4M	(2011) Structural Welding Code - Reinforcing Steel

ASTM INTERNATIONAL (ASTM)

ASTM A1064/A1064M	(2014) Standard Specification for Carbon-Steel Wire and Welded Wire Reinforcement, Plain and Deformed, for Concrete
ASTM A615/A615M	(2014) Standard Specification for Deformed and Plain Carbon-Steel Bars for Concrete Reinforcement
ASTM A934/A934M	(2013) Standard Specification for Epoxy-Coated Prefabricated Steel Reinforcing Bars
ASTM C1017/C1017M	(2013) Standard Specification for Chemical Admixtures for Use in Producing Flowing Concrete
ASTM C1077	(2014) Standard Practice for Laboratories Testing Concrete and Concrete Aggregates for Use in Construction and Criteria for Laboratory Evaluation
ASTM C1107/C1107M	(2014) Standard Specification for Packaged Dry, Hydraulic-Cement Grout (Nonshrink)
ASTM C1157/C1157M	(2011) Standard Specification for Hydraulic Cement
ASTM C1218/C1218M	(1999; R 2008) Standard Specification for Water-Soluble Chloride in Mortar and Concrete
ASTM C1260	(2014) Standard Test Method for Potential Alkali Reactivity of Aggregates (Mortar-Bar Method)
ASTM C143/C143M	(2012) Standard Test Method for Slump of Hydraulic-Cement Concrete
ASTM C150/C150M	(2012) Standard Specification for Portland Cement

ASTM C1567	(2013) Standard Test Method for Potential Alkali-Silica Reactivity of Combinations of Cementitious Materials and Aggregate (Accelerated Mortar-Bar Method)
ASTM C1602/C1602M	(2012) Standard Specification for Mixing Water Used in Production of Hydraulic Cement Concrete
ASTM C172/C172M	(2014a) Standard Practice for Sampling Freshly Mixed Concrete
ASTM C173/C173M	(2014) Standard Test Method for Air Content of Freshly Mixed Concrete by the Volumetric Method
ASTM C192/C192M	(2014) Standard Practice for Making and Curing Concrete Test Specimens in the Laboratory
ASTM C231/C231M	(2014) Standard Test Method for Air Content of Freshly Mixed Concrete by the Pressure Method
ASTM C260/C260M	(2010a) Standard Specification for Air-Entraining Admixtures for Concrete
ASTM C295/C295M	(2012) Petrographic Examination of Aggregates for Concrete
ASTM C31/C31M	(2012) Standard Practice for Making and Curing Concrete Test Specimens in the Field
ASTM C311/C311M	(2013) Sampling and Testing Fly Ash or Natural Pozzolans for Use as a Mineral Admixture in Portland-Cement Concrete
ASTM C33/C33M	(2013) Standard Specification for Concrete Aggregates
ASTM C39/C39M	(2014a) Standard Test Method for Compressive Strength of Cylindrical Concrete Specimens
ASTM C42/C42M	(2013) Standard Test Method for Obtaining and Testing Drilled Cores and Sawed Beams of Concrete
ASTM C494/C494M	(2013) Standard Specification for Chemical Admixtures for Concrete
ASTM C552	(2014) Standard Specification for Cellular Glass Thermal Insulation
ASTM C578	(2014a) Standard Specification for Rigid, Cellular Polystyrene Thermal Insulation
ASTM C591	(2013) Standard Specification for Unfaced Preformed Rigid Cellular Polyisocyanurate

	Thermal Insulation
ASTM C595/C595M	(2014) Standard Specification for Blended Hydraulic Cements
ASTM C618	(2012a) Standard Specification for Coal Fly Ash and Raw or Calcined Natural Pozzolan for Use in Concrete
ASTM C78/C78M	(2012; E 2013) Standard Test Method for Flexural Strength of Concrete (Using Simple Beam with Third-Point Loading)
ASTM C920	(2014a) Standard Specification for Elastomeric Joint Sealants
ASTM C94/C94M	(2014b) Standard Specification for Ready-Mixed Concrete
ASTM C989/C989M	(2014) Standard Specification for Slag Cement for Use in Concrete and Mortars
ASTM D1751	(2004; E 2013; R 2013) Standard Specification for Preformed Expansion Joint Filler for Concrete Paving and Structural Construction (Nonextruding and Resilient Bituminous Types)
ASTM D1752	(2004a; R 2013) Standard Specification for Preformed Sponge Rubber Cork and Recycled PVC Expansion
ASTM D471	(2012a) Standard Test Method for Rubber Property - Effect of Liquids
ASTM D5759	(2012) Characterization of Coal Fly Ash and Clean Coal Combustion Fly Ash for Potential Uses
ASTM D6690	(2012) Standard Specification for Joint and Crack Sealants, Hot Applied, for Concrete and Asphalt Pavements
ASTM E1643	(2011) Standard Practice for Selection, Design, Installation, and Inspection of Water Vapor Retarders Used in Contact with Earth or Granular Fill Under Concrete Slabs
ASTM E1745	(2011) Standard Specification for Water Vapor Retarders Used in Contact with Soil or Granular Fill under Concrete Slabs
ASTM E329	(2014a) Standard Specification for Agencies Engaged in the Testing and/or Inspection of Materials Used in Construction
ASTM E96/E96M	(2014) Standard Test Methods for Water Vapor Transmission of Materials

CONCRETE REINFORCING STEEL INSTITUTE (CRSI)

CRSI 10MSP	(2009; 28th Ed) Manual of Standard Practice

NATIONAL INSTITUTE OF STANDARDS AND TECHNOLOGY (NIST)

NIST PS 1	(2009) DOC Voluntary Product Standard PS 1-07, Structural Plywood

U.S. ARMY CORPS OF ENGINEERS (USACE)

COE CRD-C 513	(1974) Corps of Engineers Specifications for Rubber Waterstops

U.S. GENERAL SERVICES ADMINISTRATION (GSA)

FS SS-S-200	(Rev E; Am 1; Notice 1) Sealant, Joint, Two-Component, Jet-Blast-Resistant, Cold-Applied, for Portland Cement Concrete Pavement

U.S. GREEN BUILDING COUNCIL (USGBC)

LEED NC	(2009) Leadership in Energy and Environmental Design(tm) New Construction Rating System

1.2 DEFINITIONS

a. "Cementitious material" as used herein must include all portland cement, pozzolan, fly ash, ground granulated blast-furnace slag, and .

b. "Exposed to public view" means situated so that it can be seen from eye level from a public location after completion of the building. A public location is accessible to persons not responsible for operation or maintenance of the building.

c. "Chemical admixtures" are materials in the form of powder or fluids that are added to the concrete to give it certain characteristics not obtainable with plain concrete mixes.

d. "Supplementary cementing materials" (SCM) include coal fly ash, granulated blast-furnace slag, natural or calcined pozzolans, and ultra-fine coal ash when used in such proportions to replace the portland cement that result in improvement to sustainability and durability and reduced cost.

e. "Design strength" (f'c) is the specified compressive strength of concrete at time(s) specified in this section to meet structural design criteria.

f. "Mass Concrete" is any concrete system that approaches a maximum temperature of 70 degrees C within the first 72 hours of placement. In addition, it includes all concrete elements with a section thickness of 1 meter or more regardless of temperature.

g. "Mixture proportioning" is the process of designing concrete mixture proportions to enable it to meet the strength, service life and

constructability requirements of the project while minimizing the initial and life-cycle cost.

h. "Mixture proportions" are the masses or volumes of individual ingredients used to make a unit measure (cubic meter or cubic yard) of concrete.

i. "Pozzolan" is a siliceous or siliceous and aluminous material, which in itself possesses little or no cementitious value but will, in finely divided form and in the presence of moisture, chemically react with calcium hydroxide at ordinary temperatures to form compounds possessing cementitious properties.

j. "Workability (or consistence)" is the ability of a fresh (plastic) concrete mix to fill the form/mould properly with the desired work (vibration) and without reducing the concrete's quality. Workability depends on water content, chemical admixtures, aggregate (shape and size distribution), cementitious content and age (level of hydration).

1.3 SUBMITTALS

Government approval is required for submittals with a "G" designation; submittals not having a "G" designation are for Contractor Quality Control approval. Submittals with an "S" are for inclusion in the Sustainability Notebook, in conformance to Section 01 33 29 SUSTAINABILITY REPORTING. Submit the following in accordance with Section 01 33 00 SUBMITTAL PROCEDURES:

SD-01 Preconstruction Submittals

Quality Control Plan; G
Quality Control Personnel Certifications; G
Quality Control Organizational Chart
Laboratory Accreditation; G

SD-02 Shop Drawings

Reinforcing steel; G

SD-03 Product Data

Joint sealants; (LEED NC)
Joint filler; (LEED NC)
Materials for Forms
Recycled Aggregate Materials; (LEED NC)
Cementitious Materials; (LEED NC)
Vapor barrier
Concrete Curing Materials
Reinforcement; (LEED NC)
Liquid Chemical Floor Hardener
Admixtures
Waterstops
Local/Regional Materials; (LEED NC)
Biodegradable Form Release Agent
Pumping Concrete

SD-05 Design Data

Concrete mix design; G

SD-06 Test Reports

Concrete mix design; G

Fly ash

Pozzolan

Ground granulated blast-furnace slag

Aggregates

Compressive strength tests; G

Ion concentration

Air Content; G

Slump Tests; G

Water

SD-07 Certificates

Reinforcing Bars

VOC Content for form release agents, curing compounds, and concrete penetrating sealers

Material Safety Data Sheets

Field Testing Technician and Testing Agency

SD-08 Manufacturer's Instructions

Liquid Chemical Floor Hardener

Curing Compound

1.4 MODIFICATION OF REFERENCES

Accomplish work in accordance with ACI publications except as modified herein. Consider the advisory or recommended provisions to be mandatory. Interpret reference to the "Building Official," the "Structural Engineer," and the "Architect/Engineer" to mean the Contracting Officer.

1.5 DELIVERY, STORAGE, AND HANDLING

Follow ACI 301, ACI 304R and ASTM A934/A934M requirements and recommendations. Do not deliver concrete until vapor barrier, forms, reinforcement, embedded items, and chamfer strips are in place and ready for concrete placement. Do not store concrete curing compounds or sealers with materials that have a high capacity to adsorb volatile organic compound (VOC) emissions. Do not store concrete curing compounds or sealers in occupied spaces.

1.5.1 Reinforcement

Store reinforcement of different sizes and shapes in separate piles or racks raised above the ground to avoid excessive rusting. Protect from contaminants such as grease, oil, and dirt. Ensure bar sizes can be accurately identified after bundles are broken and tags removed.

1.6 QUALITY ASSURANCE

1.6.1 Design Data

1.6.1.1 Concrete Mix Design

Sixty days minimum prior to concrete placement, submit a mix design for each strength and type of concrete. Submit a complete list of materials including type; brand; source and amount of cement, complementary cementitious materials, and admixtures; and applicable reference specifications. Submit mill test and all other test for cement, complementary cementitious materials, aggregates, and admixtures. Provide documentation of maximum nominal aggregate size, gradation analysis, percentage retained and passing sieve, and a graph of percentage retained verses sieve size. Provide mix proportion data using at least three different water-cementitious material ratios for each type of mixture, which produce a range of strength encompassing those required for each type of concrete required. If source material changes, resubmit mix proportion data using revised source material. Provide only materials that have been proven by trial mix studies to meet the requirements of this specification, unless otherwise approved in writing by the Contracting Officer. Indicate clearly in the submittal where each mix design is used when more than one mix design is submitted. Resubmit data on concrete components if the qualities or source of components changes. For previously approved concrete mix designs used within the past twelve months, the previous mix design may be re-submitted without further trial batch testing if accompanied by material test data conducted within the last six months. Obtain mix design approval from the contracting officer prior to concrete placement.

1.6.2 Shop Drawings

1.6.2.1 Reinforcing Steel

ACI SP-66. Indicate bending diagrams, assembly diagrams, splicing and laps of bars, shapes, dimensions, and details of bar reinforcing, accessories, and concrete cover. Do not scale dimensions from structural drawings to determine lengths of reinforcing bars. Reproductions of contract drawings are unacceptable.

1.6.3 Control Submittals

1.6.3.1 Pumping Concrete

Submit proposed materials and methods for pumping concrete. Submittal must include mix designs, pumping equipment including type of pump and size and material for pipe, and maximum length and height concrete is to be pumped.

1.6.3.2 VOC Content for form release agents, curing compounds, and concrete penetrating sealers

Submit certification for the form release agent, curing compounds, and concrete penetrating sealers that indicate the VOC content of each product.

1.6.3.3 Material Safety Data Sheets

Submit Material Safety Data Sheets (MSDS) for all materials that are regulated for hazardous health effects. MSDS must be readily accessible during each work shift to employees when they are at the construction site.

1.6.4 Test Reports

1.6.4.1 Fly Ash and Pozzolan

Submit test results in accordance with ASTM C618 for fly ash and pozzolan. Submit test results performed within 6 months of submittal date.

1.6.4.2 Ground Granulated Blast-Furnace Slag

Submit test results in accordance with ASTM C989/C989M for ground granulated blast-furnace slag. Submit test results performed within 6 months of submittal date.

1.6.5 Quality Control Plan

Develop and submit for approval a concrete quality control program in accordance with the guidelines of ACI 121R and as specified herein. The plan must include approved laboratories. Provide direct oversight for the concrete qualification program inclusive of associated sampling and testing. All quality control reports must be provided to the Contracting Officer, Quality Manager and Concrete Supplier. Maintain a copy of ACI SP-15 and CRSI 10MSP at project site.

1.6.6 Quality Control Personnel Certifications

The Contractor must submit for approval the responsibilities of the various quality control personnel, including the names and qualifications of the individuals in those positions and a quality control organizational chart defining the quality control hierarchy and the responsibility of the various positions. Quality control personnel must be employed by the Contractor.

Submit American Concrete Institute certification for the following:

a. CQC personnel responsible for inspection of concrete operations.

b. Lead Foreman or Journeyman of the Concrete Placing, Finishing, and Curing Crews.

c. Field Testing Technicians: ACI Concrete Field Testing Technician, Grade I.

1.6.6.1 Quality Manager Qualifications

The quality manager must hold a current license as a professional engineer in a U.S. state or territory with experience on at least five (5) similar projects. Evidence of extraordinary proven experience may be considered by

the Contracting Officer as sufficient to act as the Quality Manager.

1.6.6.2 Field Testing Technician and Testing Agency

Submit data on qualifications of proposed testing agency and technicians for approval by the Contracting Officer prior to performing testing on concrete.

a. Work on concrete under this contract must be performed by an ACI Concrete Field Testing Technician Grade 1 qualified in accordance with ACI SP-2 or equivalent. Equivalent certification programs must include requirements for written and performance examinations as stipulated in ACI SP-2.

b. Testing agencies that perform testing services on reinforcing steel must meet the requirements of ASTM E329.

c. Testing agencies that perform testing services on concrete materials must meet the requirements of ASTM C1077.

1.6.7 Laboratory Qualifications for Concrete Qualification Testing

The concrete testing laboratory must have the necessary equipment and experience to accomplish required testing. The laboratory must meet the requirements of ASTM C1077 and be Cement and Concrete Reference Laboratory (CCRL) inspected.

1.6.8 Laboratory Accreditation

Laboratory and testing facilities must be provided by and at the expense of the Contractor. The laboratories performing the tests must be accredited in accordance with ASTM C1077, including ASTM C78/C78M and ASTM C1260. The accreditation must be current and must include the required test methods, as specified. Furthermore, the testing must comply with the following requirements:

a. Aggregate Testing and Mix Proportioning: Aggregate testing and mixture proportioning studies must be performed by an accredited laboratory and under the direction of a registered professional engineer in a U.S. state or territory competent in concrete materials who is competent in concrete materials and must sign all reports and designs.

b. Acceptance Testing: Furnish all materials, labor, and facilities required for molding, curing, testing, and protecting test specimens at the site and in the laboratory. Furnish and maintain boxes or other facilities suitable for storing and curing the specimens at the site while in the mold within the temperature range stipulated by ASTM C31/C31M.

c. Contractor Quality Control: All sampling and testing must be performed by an approved, onsite, independent, accredited laboratory.

1.7 ENVIRONMENTAL REQUIREMENTS

Provide space ventilation according to manufacturer recommendations, at a minimum, during and following installation of concrete curing compound and sealer. Maintain one of the following ventilation conditions during the curing period or for 72 hours after installation:

a. Supply 100 percent outside air 24 hours a day.

b. Supply airflow at a rate of 6 air changes per hour, when outside temperatures are between 13 degrees C and 29 degrees C and humidity is between 30 percent and 60 percent.

c. Supply airflow at a rate of 1.5 air changes per hour, when outside air conditions are not within the range stipulated above.

1.7.1 Submittals for Environmental Performance

a. Provide data indication the percentage of post-industrial pozzolan (fly ash, blast furnace slag) cement substitution as a percentage of the full product composite by weight.

b. Provide data indicating the percentage of post-industrial and post-consumer recycled content aggregate.

c. Provide product data indicating the percentage of post-consumer recycled steel content in each type of steel reinforcement as a percentage of the full product composite by weight.

d. Provide product data stating the location where all products were manufactured

e. For projects using FSC certified formwork, provide chain-of-custody documentation for all certified wood products.

f. For projects using reusable formwork, provide data showing how formwork is reused.

g. Provide MSDS product information data showing that form release agents meet any environmental performance goals such as using vegetable and soy based products.

h. Provide MSDS product information data showing that concrete adhesives meet any environmental performance goals including low emitting, low volatile organic compound products.

1.8 SUSTAINABLE DESIGN REQUIREMENTS

1.8.1 Local/Regional Materials

Use materials or products extracted, harvested, or recovered, as well as manufactured, within a 805 kilometer radius from the project site, if available from a minimum of three sources. Submit documentation indicating distance between manufacturing facility and the project site. Indicate distance of raw material origin from the project site. Indicate relative dollar value of local/regional materials to total dollar value of products included in project.

1.9 QUALIFICATIONS FOR WELDING WORK

Welding procedures must be in accordance with AWS D1.4/D1.4M.

Verify that Welder qualifications are in accordance with AWS D1.4/D1.4M or under an equivalent qualification test approved in advance. Welders are permitted to do only the type of welding for which each is specifically qualified.

PART 2 PRODUCTS

2.1 MATERIALS FOR FORMS

Provide wood, plywood, plastic, carton, or steel. Use plywood or steel forms where a smooth form finish is required.

2.1.1 Wood Forms

Provide lumber that is square edged or tongue-and-groove boards, free of raised grain, knotholes, or other surface defects. Provide plywood that complies with NIST PS 1, B-B concrete form panels or better or AHA A135.4, hardboard for smooth form lining.

2.1.1.1 Concrete Form Plywood (Standard Rough)

Provide plywood that conforms to NIST PS 1, B-B, concrete form, not less than 16 mm thick.

2.1.1.2 Overlaid Concrete Form Plywood (Standard Smooth)

Provide plywood that conforms to NIST PS 1, B-B, high density form overlay, not less than 16 mm thick.

2.1.2 Plastic Forms

Provide plastic forms that contain 100 percent post-consumer recycled content, or 100 percent post-industrial recycled content.

2.1.3 Carton Forms

Moisture resistant treated paper faces, biodegradable, structurally sufficient to support weight of wet concrete until initial set. Provide carton forms that contain a minimum of 10 percent post-consumer recycled content, or a minimum of 40 percent post-industrial recycled content.

2.1.4 Steel Forms

Provide steel form surfaces that do not contain irregularities, dents, or sags.

2.2 FORM TIES AND ACCESSORIES

Provide a form tie system that does not leave mild steel after break-off or removal any closer than 50 mm from the exposed surface. Do not use wire alone. Form ties and accessories must not reduce the effective cover of the reinforcement.

2.2.1 Waterstops

2.2.1.1 Rubber Waterstop

Rubber waterstops must conform to COE CRD-C 513.

2.2.1.2 Thermoplastic Elastomeric Rubber Waterstop

Thermoplastic elastomeric rubber waterstops must conform to ASTM D471.

2.2.2 Perimeter Insulation

Perimeter insulation must be polystyrene conforming to ASTM C578, Type II; polyurethane conforming to ASTM C591, Type II; or cellular glass conforming to ASTM C552, Type I or IV. Comply with EPA requirements in accordance with Section 01 33 29 SUSTAINABILITY REPORTING.

2.3 CONCRETE MIX DESIGN

2.3.1 Contractor-Furnished Mix Design

ACI 211.1, ACI 301, and ACI 318 except as otherwise specified. Indicate the compressive strength (f'c) of the concrete for each portion of the structure(s) as specified below. Where faster set time is required, use Type III cement before using calcium chloride with approval from the contracting officer.

2.3.1.1 Footings

Proportion normal-weight concrete mixture as follows:

a. Minimum Compressive Strength: 34.5 MPa at 28 days.

b. Maximum Water-Cementitious Materials Ratio: 0.40 .

c. Slump Limit: 200 mm for concrete with verified slump of 50 to 100 mm before adding high-range water-reducing admixture or plasticizing admixture, plus or minus 25 mm.

d. Air Content: 6 percent, plus or minus 1.5 percent at point of delivery for 25 mm nominal maximum aggregate size.

2.3.1.2 Foundation Walls

Proportion normal-weight concrete mixture as follows:

a. Minimum Compressive Strength: 34.5 MPa at 28 days.

b. Maximum Water-Cementitious Materials Ratio: 0.40 .

c. Slump Limit: 200 mm for concrete with verified slump of 50 to 100 mm before adding high-range water-reducing admixture or plasticizing admixture, plus or minus 25 mm.

d. Air Content: 6 percent, plus or minus 1.5 percent at point of delivery for 25 mm nominal maximum aggregate size.

2.3.1.3 Slab-on-Grade

Proportion normal-weight concrete mixture as follows:

a. Minimum Compressive Strength: 31 MPa at 28 days.

b. Maximum Water-Cementitious Materials Ratio: 0.45 .

c. Slump Limit: 200 mm for concrete with verified slump of 50 to 100 mm before adding high-range water-reducing admixture or plasticizing admixture, plus or minus 25 mm.

d. Air Content: 6 percent, plus or minus 1.5 percent at point of delivery for 25 mm nominal maximum aggregate size.

e. Air Content: Do not allow air content of trowel-finished floors to exceed 3 percent.

2.3.1.4 Suspended Slabs

Proportion normal-weight concrete mixture as follows:

a. Minimum Compressive Strength: 31 MPa at 28 days.

b. Maximum Water-Cementitious Materials Ratio: 0.45 .

c. Slump Limit: 200 mm for concrete with verified slump of 50 to 100 mm before adding high-range water-reducing admixture or plasticizing admixture , plus or minus 25 mm.

d. Air Content: 6 percent, plus or minus 1.5 percent at point of delivery for 25 mm nominal maximum aggregate size.

e. Air Content: Do not allow air content of trowel-finished floors to exceed 3 percent.

2.3.1.5 Building Frame Members

Proportion normal-weight concrete mixture as follows:

a. Minimum Compressive Strength: 34.5 MPa at 28 days.

b. Maximum Water-Cementitious Materials Ratio: 0.40 .

c. Slump Limit: 200 mm for concrete with verified slump of 50 to 100 mm before adding high-range water-reducing admixture or plasticizing admixture, plus or minus 25 mm.

e. Air Content: 6 percent, plus or minus 1.5 percent at point of delivery for 25 mm nominal maximum aggregate size.

2.3.1.6 Building Walls

Proportion normal-weight concrete mixture as follows:

a. Minimum Compressive Strength: 34.5 MPa at 28 days.

b. Maximum Water-Cementitious Materials Ratio: 0.40 .

c. Slump Limit: 200 mm for concrete with verified slump of 50 to 100 mm before adding high-range water-reducing admixture or plasticizing admixture, plus or minus 25 mm.

d. Air Content: 6 percent, plus or minus 1.5 percent at point of delivery for 25 mm nominal maximum aggregate size.

2.3.1.7 Mix Proportions for Normal Weight Concrete

Trial design batches, mixture proportioning studies, and testing

requirements for various classes and types of concrete specified are the responsibility of the Contractor. Base mixture proportions on compressive strength as determined by test specimens fabricated in accordance with ASTM C192/C192M and tested in accordance with ASTM C39/C39M. Samples of all materials used in mixture proportioning studies must be representative of those proposed for use in the project and must be accompanied by the manufacturer's or producer's test report indicating compliance with these specifications. Base trial mixtures having proportions, consistencies, and air content suitable for the work on methodology described in ACI 211.1. In the trial mixture, use at least three different water-cementitious material ratios for each type of mixture, which must produce a range of strength encompassing those required for each class and type of concrete required on the project. The maximum water-cementitious material ratio allowed must be based on equivalent water-cementitious material ratio calculations as determined by the conversion from the weight ratio of water to cement plus pozzolan by weight equivalency method. Design laboratory trial mixture for maximum permitted slump and air content. Each combination of material proposed for use must have separate trial mixture, except for accelerator or retarder use can be provided without separate trial mixture. Report the temperature of concrete in each trial batch. For each water-cementitious material ratio, at least three test cylinders for each test age must be made and cured in accordance with ASTM C192/C192M and tested in accordance with ASTM C39/C39M for 7, 28, days. From these results, plot a curve showing the relationship between water-cementitious material ratio and strength for each set of trial mix studies. In addition, plot a curve showing the relationship between 7 and 28 day strengths.

2.3.1.8 Required Average Strength of Mix Design

The selected mixture must produce an average compressive strength exceeding the specified strength by the amount indicated in ACI 301, but may not exceed the specified strength at the same age by more than 20 percent. When a concrete production facility has a record of at least 15 consecutive tests, the standard deviation must be calculated and the required average compressive strength must be determined in accordance with ACI 301.

2.3.2 Ready-Mix Concrete

Provide concrete that meets the requirements of ASTM C94/C94M.

Ready-mixed concrete manufacturer must provide duplicate delivery tickets with each load of concrete delivered. Provide delivery tickets with the following information in addition to that required by ASTM C94/C94M:

Type and brand cement

Cement and complementary cementitious materials content in 43 kilogram bags per cubic meter of concrete

Maximum size of aggregate

Amount and brand name of admixtures

Total water content expressed by water cementitious material ratio

2.3.3 Concrete Curing Materials

Provide concrete curing material in accordance with ACI 301 Section 5 and ACI 308.1 Section 2. Submit product data for concrete curing compounds. Submit manufactures instructions for placement of curing compound.

2.4 MATERIALS

2.4.1 Cementitious Materials

For exposed concrete, use one manufacturer and one source for each type of cement, ground slag, fly ash, and pozzolan.

2.4.1.1 Fly Ash

ASTM C618, Class F, except that the maximum allowable loss on ignition must not exceed 3 percent. Class F fly ash for use in mitigating Alkali-Silica Reactivity must have a Calcium Oxide (CaO) content of less than 8 percent and a total equivalent alkali content less than 1.5 percent.

Add with cement. Fly ash content must be a minimum of 35 percent by weight of cementitious material, provided the fly ash does not reduce the amount of cement in the concrete mix below the minimum requirements of local building codes. Where the use of fly ash cannot meet the minimum level, provide the maximum amount of fly ash permittable that meets the code requirements for cement content. Report the chemical analysis of the fly ash in accordance with ASTM C311/C311M. Evaluate and classify fly ash in accordance with ASTM D5759.

2.4.1.2 Raw or Calcined Natural Pozzolan

Natural pozzolan must be raw or calcined and conform to ASTM C618, Class N, including the optional requirements for uniformity and effectiveness in controlling Alkali-Silica reaction and must have an ignition loss not exceeding 3 percent. Class N pozzolan for use in mitigating Alkali-Silica Reactivity must have a Calcium Oxide (CaO) content of less than 13 percent and total equivalent alkali content less than 3 percent.

2.4.1.3 Ultra Fine Fly Ash and Ultra Fine Pozzolan

Ultra Fine Fly Ash (UFFA) and Ultra Fine Pozzolan (UFP) must conform to ASTM C618, Class F or N, and the following additional requirements:

a. The strength activity index at 28 days of age must be at least 95 percent of the control specimens.

b. The average particle size must not exceed 6 microns.

c. The sum of $SiO_2 + Al_2O_3 + Fe_2O_3$ must be greater than 77 percent.

2.4.1.4 Ground Granulated Blast-Furnace Slag

ASTM C989/C989M, Grade 100. Slag content must be a minimum of 50 percent by weight of cementitious material.

2.4.1.5 Portland Cement

Provide cement that conforms to ASTM C150/C150M, Type II with tri-calcium

aluminates (C3A) content less than 10 percent and a maximum cement-alkali content of 0.80 percent Na2Oe (sodium oxide) equivalent.. Use one brand and type of cement for formed concrete having exposed-to-view finished surfaces.

2.4.1.6 Blended Cements

Blended cement must conform to ASTM C595/C595M and ASTM C1157/C1157M, Type IP or IS, including the optional requirement for mortar expansion and consist of a mixture of ASTM C150/C150M Type I, or Type II cement and a complementary cementing material. The slag added to the Type IS blend must be ASTM C989/C989M ground granulated blast-furnace slag. The pozzolan added to the Type IP blend must be ASTM C618 Class F and must be interground with the cement clinker. The manufacturer must state in writing that the amount of pozzolan in the finished cement will not vary more than plus or minus 5 mass percent of the finished cement from lot-to-lot or within a lot. The percentage and type of mineral admixture used in the blend must not change from that submitted for the aggregate evaluation and mixture proportioning.

2.4.2 Water

Water must comply with the requirements of ASTM C1602/C1602M. Minimize the amount of water in the mix. Improve workability by adjusting the grading rather than by adding water. Water must be potable; free from injurious amounts of oils, acids, alkalis, salts, organic materials, or other substances deleterious to concrete. Submit test report showing water complies with ASTM C1602/C1602M.

2.4.3 Aggregates

ASTM C33/C33M, except as modified herein. Furnish aggregates for exposed concrete surfaces from one source. Provide aggregates that do not contain any substance which may be deleteriously reactive with the alkalies in the cement. Submit test report showing compliance with ASTM C33/C33M.

1. GGBF slag at a minimum of 40 percent of total cementitious

2. Fly ash or natural pozzolan at a minimum of total cementitious of
   a. 30 percent if (SiO_2 plus Al_2O_3 plus Fe_2O_3) is 65 percent or more,
   b. 25 percent if (SiO_2 plus Al_2O_3 plus Fe_2O_3) is 70 percent or more,
   c. 20 percent if (SiO_2 plus Al_2O_3 plus Fe_2O_3) is 80 percent or more,
   d. 15 percent if (SiO_2 plus Al_2O_3 plus Fe_2O_3) is 90 percent or more.

If a combination of these materials is chosen, the minimum amount must be a linear combination of the minimum amounts above. Include these materials in sufficient proportion to show less than 0.08 percent expansion at 28 days after casting when tested in accordance with ASTM C1567.

Aggregates must not possess properties or constituents that are known to have specific unfavorable effects in concrete when tested in accordance with ASTM C295/C295M.

2.4.3.1 Recycled Aggregate Materials

Use a minimum of 25 percent recycled aggregate, depending on local availability and conforming to requirements of the mix design. Recycled

aggregate to include: recovered concrete recovered stone that meets the aggregate requirements specified. Submit recycled material request with the aggregate certification submittals and do not use until approved by the Contracting Officer.

2.4.4 Nonshrink Grout

ASTM C1107/C1107M.

2.4.5 Admixtures

ASTM C494/C494M: Type A, water reducing; Type B, retarding; Type C, accelerating; Type D, water-reducing and retarding; and Type E, water-reducing and accelerating admixture. Do not use calcium chloride admixtures. Submit product data for admixtures used in concrete.

2.4.5.1 Air-Entraining

ASTM C260/C260M.

2.4.5.2 High Range Water Reducer (HRWR) (Superplasticizers)

ASTM C494/C494M, Type F and ASTM C1017/C1017M.

2.4.6 Vapor Barrier

ASTM E1745 Class C polyethylene sheeting, minimum 0.25 mm thickness or other equivalent material with a maximum permeance rating of 0.04 perms per ASTM E96/E96M.

2.4.7 Expansion/Contraction Joint Filler

ASTM D1751 or ASTM D1752 Type I or II. Material must be 13 mm thick, unless otherwise indicated.

2.4.8 Joint Sealants

Submit manufacturer's product data, indicating VOC content.

2.4.8.1 Horizontal Surfaces, 3 Percent Slope, Maximum

ASTM D6690 or ASTM C920, Type M, Class 25, Use T, FS SS-S-200 Fuel Resistant.

2.4.8.2 Vertical Surfaces Greater Than 3 Percent Slope

ASTM C920, Type M, Grade NS, Class 25, Use T NT FS SS-S-200, no sag, Fuel Resistant.

2.4.9 Biodegradable Form Release Agent

Provide form release agent that is colorless, biodegradable, and water-based, with a low (maximum of 55 grams/liter (g/l)) zero VOC content. A minimum of 85 percent of the total product must be biobased material. Provide product that does not bond with, stain, or adversely affect concrete surfaces and does not impair subsequent treatments of concrete surfaces. Provide form release agent that does not contain diesel fuel, petroleum-based lubricating oils, waxes, or kerosene. Submit

documentation indicating type of biobased material in product and biobased content. Indicate relative dollar value of biobased content products to total dollar value of products included in project.

2.5 REINFORCEMENT

2.5.1 Reinforcing Bars

ACI 301 unless otherwise specified. Use deformed steel. ASTM A615/A615M with the bars marked A, Grade 420 Provide reinforcing bars that contain a minimum of 100 percent recycled content. See Section 01 33 29 LEED(tm) DOCUMENTATION for cumulative total recycled content requirements. Reinforcing bars may contain post-consumer or post-industrial recycled content. Submit documentation indicating percentage of post-industrial and post-consumer recycled content per unit of product. Indicate relative dollar value of recycled content products to total dollar value of products included in project. Submit mill certificates for reinforcing bars.

2.5.2 Wire

2.5.2.1 Welded Wire Reinforcement

ASTM A1064/A1064M. Provide wire reinforcement that contains a minimum of 100 percent recycled content. See Section 01 33 29 LEED(tm) DOCUMENTATION for cumulative total recycled content requirements. Wire reinforcement may contain post-consumer or post-industrial recycled content. Provide flat sheets of welded wire reinforcement for slabs and toppings.

2.5.2.2 Steel Wire

Wire must conform to ASTM A1064/A1064M.

2.5.3 Reinforcing Bar Supports

Supports include bolsters, chairs, spacers, and other devices necessary for proper spacing, supporting, and fastening reinforcing bars and welded wire reinforcement in place.

Provide wire bar type supports of coated or non-corrodible material conforming to ACI SP-66 and CRSI 10MSP.

Legs of supports in contact with formwork must be hot-dip galvanized, or plastic coated after fabrication, or stainless-steel bar supports.

2.6 FLOOR FINISH MATERIALS

2.6.1 Liquid Chemical Floor Hardener

Hardener must be a colorless aqueous solution containing a blend of inorganic silicate or siliconate material and proprietary components combined with a wetting agent; that penetrates, hardens, and densifies concrete surfaces. Submit manufactures instructions for placement of liquid chemical floor hardener.

PART 3 EXECUTION

3.1 EXAMINATION

Do not begin installation until substrates have been properly constructed; verify that substrates are level.

If substrate preparation is the responsibility of another installer, notify Contracting Officer of unsatisfactory preparation before processing.

Check field dimensions before beginning installation. If dimensions vary too much from design dimensions for proper installation, notify Contracting Officer and wait for instructions before beginning installation.

3.2 PREPARATION

Determine quantity of concrete needed and minimize the production of excess concrete. Designate locations or uses for potential excess concrete before the concrete is poured.

3.2.1 General

Surfaces against which concrete is to be placed must be free of debris, loose material, standing water, snow, ice, and other deleterious substances before start of concrete placing.

Remove standing water without washing over freshly deposited concrete. Divert flow of water through side drains provided for such purpose.

3.2.2 Subgrade Under Foundations and Footings

When subgrade material is semiporous and dry, sprinkle subgrade surface with water as required to eliminate suction at the time concrete is deposited, or seal subgrade surface by covering surface with specified vapor retarder.

3.2.3 Subgrade Under Slabs on Ground

Before construction of slabs on ground, have underground work on pipes and conduits completed and approved.

Previously constructed subgrade or fill must be cleaned of foreign materials.

Finish surface of capillary water barrier under interior slabs on ground must not show deviation in excess of 6.4 mm when tested with a 3000 mm straightedge parallel with and at right angles to building lines.

Finished surface of subgrade or fill under exterior slabs on ground must not be more than 6.10 mm above or 30.50 mm below elevation indicated.

3.2.4 Edge Forms and Screed Strips for Slabs

Set edge forms or bulkheads and intermediate screed strips for slabs to obtain indicated elevations and contours in finished slab surface and must be strong enough to support vibrating bridge screeds or roller pipe screeds if nature of specified slab finish requires use of such equipment. Align concrete surface to elevation of screed strips by use of

strike-off templates or approved compacting-type screeds.

3.2.5 Reinforcement and Other Embedded Items

Secure reinforcement, joint materials, and other embedded materials in position, inspected, and approved before start of concrete placing.

3.3 FORMS

Provide forms, shoring, and scaffolding for concrete placementin accordance with ACI 301 Section 2 and 5 and ACI 347. Set forms mortar-tight and true to line and grade. Chamfer above grade exposed joints, edges, and external corners of concrete 20 mm unless otherwise indicated. Provide formwork with clean-out openings to permit inspection and removal of debris.

3.3.1 Coating

Before concrete placement, coat the contact surfaces of forms with a form release agent.

3.3.2 Reshoring

Reshore concrete elements in accordance with ACI 301 Section 2.

3.3.3 Reuse

Reuse forms providing the structural integrity of concrete and the aesthetics of exposed concrete are not compromised. Wood forms must not be clogged with paste and must be capable of absorbing high water-cementitious material ratio paste.

3.3.4 Forms for Standard Rough Form Finish

Provide formwork in accordance with ACI 301 Section 5 with a surface finish, SF-1.0, for formed surfaces that are to be concealed by other construction.

3.3.5 Forms for Standard Smooth Form Finish

Provide formwork in accordance with ACI 301 Section 5 with a surface finish, SF-3.0, for formed surfaces that are exposed to view.

3.3.6 Form Ties

Provide ties in accordance with ACI 301 section 2.

3.3.7 Tolerances for Form Construction

Construct formwork to ensure that after removal of forms and prior to patching and finishing of formed surfaces, provide concrete surfaces in accordance with tolerances specified in ACI 301 Section 5 and ACI 117.

3.3.8 Removal of Forms and Supports

After placing concrete, removal of forms must be in accordance with ACI 301 Section 2 except as modified by approved form removal schedule.

3.4 WATERSTOP INSTALLATION AND SPLICES

Provide waterstops in construction joints as indicated.

Install waterstops to form a continuous diaphragm in each joint. Make adequate provisions to support and protect waterstops during progress of work. Protect waterstops protruding from joints from damage.

3.4.1 Rubber Waterstop

Rubber waterstops must be spliced using cold bond adhesive as recommended by the manufacturer.

3.4.2 Thermoplastic Elastomeric Rubber Waterstop

Fittings must be shop made using a machine specifically designed to mechanically weld the waterstop. A portable power saw must be used to miter or straight cut the ends to be joined to ensure good alignment and contact between joined surfaces. Maintain continuity of the characteristic features of the cross section of the waterstop (for example ribs, tabular center axis, and protrusions) across the splice.

3.5 PLACING REINFORCEMENT AND MISCELLANEOUS MATERIALS

ACI 301 and ACI SP-66. Provide bars, welded wire reinforcement, wire ties, supports, and other devices necessary to install and secure reinforcement. Reinforcement must not have rust, scale, oil, grease, clay, or foreign substances that would reduce the bond. Rusting of reinforcement is a basis of rejection if the effective cross-sectional area or the nominal weight per unit length has been reduced. Remove loose rust prior to placing steel. Tack welding is prohibited.

3.5.1 General

Provide details of reinforcement that are in accordance with ACI 301 and ACI SP-66 and as specified.

3.5.2 Vapor Barrier

Install in accordance with ASTM E1643. Provide beneath the on-grade concrete floor slab. Use the greatest widths and lengths practicable to eliminate joints wherever possible. Lap joints a minimum of 300 mm and tape. Remove torn, punctured, or damaged vapor barrier material and provide with new vapor barrier prior to placing concrete. Concrete placement must not damage vapor retarder and vapor barrier material.

3.5.3 Reinforcement Supports

Support reinforcement in accordance with ACI 301 Section 3. Supports for coated or galvanized bars must also be coated with electrically compatible material for a distance of at least 50 mm beyond the point of contact with the bars.

3.5.4 Splicing

As indicated. For splices not indicated ACI 301. Do not splice at points of maximum stress. Overlap welded wire reinforcement the spacing of the cross wires, plus 50 mm.

3.5.5 Setting Miscellaneous Material

Place and secure anchors and bolts, pipe sleeves, conduits, and other such items in position before concrete placement and support against displacement. Plumb anchor bolts and check location and elevation. Temporarily fill voids in sleeves with readily removable material to prevent the entry of concrete.

3.5.6 Fabrication

Shop fabricate reinforcing bars to conform to shapes and dimensions indicated for reinforcement, and as follows:

Provide fabrication tolerances that are in accordance with ACI 318 and ACI SP-66.

Provide hooks and bends that are in accordance with ACI 318 and ACI SP-66.

Reinforcement must be bent cold to shapes as indicated. Bending must be done in the shop. Rebending of a reinforcing bar that has been bent incorrectly is not be permitted. Bending must be in accordance with standard approved practice and by approved machine methods.

Tolerance on nominally square-cut, reinforcing bar ends must be in accordance with ACI SP-66.

Deliver reinforcing bars bundled, tagged, and marked. Tags must be metal with bar size, length, mark, and other information pressed in by machine. Marks must correspond with those used on the placing drawings.

Do not use reinforcement that has any of the following defects:

a. Bar lengths, depths, and bends beyond specified fabrication tolerances

b. Bends or kinks not indicated on drawings or approved shop drawings

c. Bars with reduced cross-section due to rusting or other cause

Replace defective reinforcement with new reinforcement having required shape, form, and cross-section area.

3.5.7 Placing Reinforcement

Place reinforcement in accordance with ACI 301 and ACI SP-66.

For slabs on grade (over earth or over capillary water barrier) and for footing reinforcement, support bars or welded wire reinforcement on precast concrete blocks, spaced at intervals required by size of reinforcement, to keep reinforcement the minimum height specified above the underside of slab or footing.

For slabs other than on grade, supports for which any portion is less than 25 mm from concrete surfaces that are exposed to view or to be painted must be of precast concrete units, plastic-coated steel, or stainless steel protected bar supports. Precast concrete units must be wedge shaped, not larger than 90 by 90 mm, and of thickness equal to that indicated for concrete protection of reinforcement. Provide precast units that have cast-in galvanized tie wire hooked for anchorage and blend with concrete surfaces after finishing is completed.

Provide reinforcement that is supported and secured together to prevent displacement by construction loads or by placing of wet concrete, and as follows:

Provide supports for reinforcing bars that are sufficient in number and have sufficient strength to carry the reinforcement they support, and in accordance with ACI 318, ACI SP-66 and CRSI 10MSP. Do not use supports to support runways for concrete conveying equipment and similar construction loads.

Equip supports on ground and similar surfaces with sand-plates.

Support welded wire reinforcement as required for reinforcing bars.

Secure reinforcements to supports by means of tie wire. Wire must be black, soft iron wire, not less than 1.6 mm.

Reinforcement must be accurately placed, securely tied at intersections, and held in position during placing of concrete by spacers, chairs, or other approved supports. Point wire-tie ends away from the form. Unless otherwise indicated, numbers, type, and spacing of supports must conform to ACI SP-66.

Bending of reinforcing bars partially embedded in concrete is permitted only as specified in ACI SP-66 and ACI 318.

3.5.8 Spacing of Reinforcing Bars

Spacing must be as indicated. If not indicated, spacing must be in accordance with the ACI 318 and ACI SP-66.

Reinforcing bars may be relocated to avoid interference with other reinforcement, or with conduit, pipe, or other embedded items. If any reinforcing bar is moved a distance exceeding one bar diameter or specified placing tolerance, resulting rearrangement of reinforcement is subject to preapproval by the Contracting Officer.

3.5.9 Concrete Protection for Reinforcement

Concrete protection must be in accordance with the ACI 318 and ACI SP-66.

3.6 BATCHING, MEASURING, MIXING, AND TRANSPORTING CONCRETE

ASTM C94/C94M, ACI 301, ACI 302.1R and ACI 304R, except as modified herein. Batching equipment must be such that the concrete ingredients are consistently measured within the following tolerances: 1 percent for cement and water, 2 percent for aggregate, and 3 percent for admixtures. Furnish mandatory batch ticket information for each load of ready mix concrete.

3.6.1 Measuring

Make measurements at intervals as specified in paragraphs SAMPLING and TESTING.

3.6.2 Mixing

ASTM C94/C94M, ACI 301 and ACI 304R. Machine mix concrete. Begin mixing

within 30 minutes after the cement has been added to the aggregates. Place concrete within 90 minutes of either addition of mixing water to cement and aggregates or addition of cement to aggregates if the air temperature is less than 29 degrees C . Reduce mixing time and place concrete within 60 minutes if the air temperature is greater than 29 degrees C except as follows: if set retarding admixture is used and slump requirements can be met, limit for placing concrete may remain at 90 minutes. Additional water may be added, provided that both the specified maximum slump and water-cementitious material ratio are not exceeded and the required concrete strength is still met. When additional water is added, an additional 30 revolutions of the mixer at mixing speed is required. If the entrained air content falls below the specified limit, add a sufficient quantity of admixture to bring the entrained air content within the specified limits. Dissolve admixtures in the mixing water and mix in the drum to uniformly distribute the admixture throughout the batch. Do not reconstitute concrete that has begun to solidify.

3.6.3 Transporting

Transport concrete from the mixer to the forms as rapidly as practicable. Prevent segregation or loss of ingredients. Clean transporting equipment thoroughly before each batch. Do not use aluminum pipe or chutes. Remove concrete which has segregated in transporting and dispose of as directed.

3.7 PLACING CONCRETE

Place concrete in accordance with ACI 301 Section 5.

3.7.1 Footing Placement

Concrete for footings may be placed in excavations without forms upon inspection and approval by the Contracting Officer. Excavation width must be a minimum of 100 mm greater than indicated.

3.7.2 Pumping

ACI 304R and ACI 304.2R. Pumping must not result in separation or loss of materials nor cause interruptions sufficient to permit loss of plasticity between successive increments. Loss of slump in pumping equipment must not exceed 50 mm at discharge/placement. Do not convey concrete through pipe made of aluminum or aluminum alloy. Avoid rapid changes in pipe sizes. Limit maximum size of course aggregate to 33 percent of the diameter of the pipe. Limit maximum size of well rounded aggregate to 40 percent of the pipe diameter. Take samples for testing at both the point of delivery to the pump and at the discharge end.

3.7.3 Cold Weather

ACI 306.1. Do not allow concrete temperature to decrease below 10 degrees C. Obtain approval prior to placing concrete when the ambient temperature is below 4 degrees C or when concrete is likely to be subjected to freezing temperatures within 24 hours. Cover concrete and provide sufficient heat to maintain 10 degrees C minimum adjacent to both the formwork and the structure while curing. Limit the rate of cooling to 3 degrees C in any 1 hour and 10 degrees C per 24 hours after heat application.

3.7.4 Hot Weather

Maintain required concrete temperature using Figure 4.2 in ACI 305R to prevent the evaporation rate from exceeding 1 kg per square meter of exposed concrete per hour. Cool ingredients before mixing or use other suitable means to control concrete temperature and prevent rapid drying of newly placed concrete. Shade the fresh concrete as soon as possible after placing. Start curing when the surface of the fresh concrete is sufficiently hard to permit curing without damage. Provide water hoses, pipes, spraying equipment, and water hauling equipment, where job site is remote to water source, to maintain a moist concrete surface throughout the curing period. Provide burlap cover or other suitable, permeable material with fog spray or continuous wetting of the concrete when weather conditions prevent the use of either liquid membrane curing compound or impervious sheets. For vertical surfaces, protect forms from direct sunlight and add water to top of structure once concrete is set.

3.7.5 Bonding

Surfaces of set concrete at joints, must be roughened and cleaned of laitance, coatings, loose particles, and foreign matter. Roughen surfaces in a manner that exposes the aggregate uniformly and does not leave laitance, loosened particles of aggregate, nor damaged concrete at the surface.

Obtain bonding of fresh concrete that has set as follows:

At joints between footings and walls or columns, between walls or columns and the beams or slabs they support, and elsewhere unless otherwise specified; roughened and cleaned surface of set concrete must be dampened, but not saturated, immediately prior to placing of fresh concrete.

At joints in exposed-to-view work; at vertical joints in walls; at joints near midpoint of span in girders, beams, supported slabs, other structural members; in work designed to contain liquids; the roughened and cleaned surface of set concrete must be dampened but not saturated and covered with a cement grout coating.

Provide cement grout that consists of equal parts of portland cement and fine aggregate by weight with not more than 22.5 liters of water per sack of cement. Apply cement grout with a stiff broom or brush to a minimum thickness of 1.6 mm. Deposit fresh concrete before cement grout has attained its initial set.

3.8 WASTE MANAGEMENT

Provide as specified in the Waste Management Plan and as follows.

3.8.1 Mixing Equipment

Before concrete pours, designate for cleaning out concrete mixing trucks. Minimize water used to wash equipment.

3.8.2 Reinforcing Steel

Collect reinforcing steel and place in designated area for recycling.

3.8.3 Other Waste

Identify concrete manufacturer's or supplier's policy for collection or return of construction waste, unused material, deconstruction waste, and/or packaging material. Return excess cement to supplier.

3.9 SURFACE FINISHES EXCEPT FLOOR, SLAB, AND PAVEMENT FINISHES

3.9.1 Defects

Repair surface defects in accordance with ACI 301 Section 5.

3.9.2 Not Against Forms (Top of Walls)

Surfaces not otherwise specified must be finished with wood floats to even surfaces. Finish must match adjacent finishes.

3.9.3 Formed Surfaces

3.9.3.1 Tolerances

ACI 117 and as indicated.

3.9.3.2 As-Cast Rough Form

Provide for surfaces not exposed to public view a surface finish SF-1.0. Patch holes and defects in accordance with ACI 301.

3.9.3.3 Standard Smooth Finish

Provide for surfaces exposed to public view a surface finish SF-3.0. Patch holes and defects in accordance with ACI 301.

3.10 FLOOR, SLAB, AND PAVEMENT FINISHES AND MISCELLANEOUS CONSTRUCTION

ACI 301 and ACI 302.1R, unless otherwise specified. Slope floors uniformly to drains where drains are provided. Where straightedge measurements are specified, Contractor must provide straightedge.

3.10.1 Finish

Place, consolidate, and immediately strike off concrete to obtain proper contour, grade, and elevation before bleedwater appears. Permit concrete to attain a set sufficient for floating and supporting the weight of the finisher and equipment. If bleedwater is present prior to floating the surface, drag the excess water off or remove by absorption with porous materials. Do not use dry cement to absorb bleedwater.

3.10.1.1 Scratched

Use for surfaces intended to receive bonded applied cementitious applications. Finish concrete in accordance with ACI 301 Section 5 for a scratched finish.

3.10.1.2 Floated

Use for exterior slabs where not otherwise specified. Finish concrete in accordance with ACI 301 Section 5 for a floated finish.

3.10.1.3 Steel Troweled

Use for floors intended as walking surfaces. Finish concrete in accordance with ACI 301 Section 5 for a steel troweled finish.

3.10.1.4 Nonslip Finish

Use on surfaces of exterior platforms, steps, and landings; and on exterior and interior pedestrian ramps. Finish concrete in accordance with ACI 301 Section 5 for a dry-shake finish. After the selected material has been embedded by the two floatings, complete the operation with a broomed finish.

3.10.1.5 Broomed

Use on surfaces of exterior walks, platforms, patios, and ramps, unless otherwise indicated. Finish concrete in accordance with ACI 301 Section 5 for a broomed finish.

3.10.1.6 Pavement

Screed the concrete with a template advanced with a combined longitudinal and crosswise motion. Maintain a slight surplus of concrete ahead of the template. After screeding, float the concrete longitudinally. Use a straightedge to check slope and flatness; correct and refloat as necessary. Obtain final finish by a burlap drag. Drag a strip of clean, wet burlap from 900 to 3000 mm wide and 600 mm longer than the pavement width across the slab. Produce a fine, granular, sandy textured surface without disfiguring marks. Round edges and joints with an edger having a radius of 3 mm.

3.10.2 Concrete Walks

Provide 100 mm thick minimum. Provide contraction joints spaced every 1500 lineal mm unless otherwise indicated. Cut contraction joints 25 mm deep with a jointing tool after the surface has been finished. Provide 13 mm thick transverse expansion joints at changes in direction where sidewalk abuts curb, steps, rigid pavement, or other similar structures; space expansion joints every 15 m maximum. Give walks a broomed finish. Unless indicated otherwise, provide a transverse slope of 1/48. Limit variation in cross section to 6 mm in 1500 mm.

3.10.3 Pits and Trenches

Place bottoms and walls monolithically or provide waterstops and keys.

3.10.4 Curbs

Provide contraction joints spaced every 3 m maximum unless otherwise indicated. Cut contraction joints 20 mm deep with a jointing tool after the surface has been finished. Provide expansion joints 13 mm thick and spaced every 30 m maximum unless otherwise indicated. Perform pavement finish.

3.10.5 Splash Blocks

Provide at outlets of downspouts emptying at grade. Splash blocks may be precast concrete, and must be 600 mm long, 300 mm wide and 100 mm thick, unless otherwise indicated, with smooth-finished countersunk dishes sloped

to drain away from the building.

3.11 JOINTS

3.11.1 Construction Joints

Make and locate joints not indicated so as not to impair strength and appearance of the structure, as approved. Joints must be perpendicular to main reinforcement. Reinforcement must be continued and developed across construction joints. Locate construction joints as follows:

3.11.1.1 Maximum Allowable Construction Joint Spacing

a. In walls at not more than 18.3 meter in any horizontal direction.

b. In slabs on ground, so as to divide slab into areas not in excess of 111.5 square meter.

3.11.1.2 Construction Joints for Constructability Purposes

a. In walls, at top of footing; at top of slabs on ground; at top and bottom of door and window openings or where required to conform to architectural details; and at underside of deepest beam or girder framing into wall.

b. In columns or piers, at top of footing; at top of slabs on ground; and at underside of deepest beam or girder framing into column or pier.

c. Near midpoint of spans for supported slabs, beams, and girders unless a beam intersects a girder at the center, in which case construction joints in girder must offset a distance equal to twice the width of the beam. Make transfer of shear through construction joint by use of inclined reinforcement.

Provide keyways at least 50 mm deep in construction joints in walls and slabs and between walls and footings; approved bulkheads may be used for slabs.

3.11.2 Isolation Joints in Slabs on Ground

Provide joints at points of contact between slabs on ground and vertical surfaces, such as column pedestals, foundation walls, grade beams, and elsewhere as indicated.

Fill joints with premolded joint filler strips 13 mm thick, extending full slab depth. Install filler strips at proper level below finish floor elevation with a slightly tapered, dress-and-oiled wood strip temporarily secured to top of filler strip to form a groove not less than 19 mm in depth where joint is sealed with sealing compound and not less than 6 mm in depth where joint sealing is not required. Remove wood strip after concrete has set. Contractor must clean groove of foreign matter and loose particles after surface has dried.

3.11.3 Contraction Joints in Slabs on Ground

Provide joints to form panels as indicated.

Sawcut contraction joints into slab on ground in accordance with ACI 301 Section 5.

Joints must be 4 mm wide by 1/5 to 1/4 of slab depth and formed by inserting hand-pressed fiberboard strip into fresh concrete until top surface of strip is flush with slab surface. After concrete has cured for at least 7 days, the Contractor must remove inserts and clean groove of foreign matter and loose particles.

Sawcutting will be limited to within 12 hours after set and at 1/4 slab depth.

3.11.4 Sealing Joints in Slabs on Ground

Contraction and control joints which are to receive finish flooring material must be sealed with joint sealing compound after concrete curing period. Slightly underfill groove with joint sealing compound to prevent extrusion of compound. Remove excess material as soon after sealing as possible.

Sealed groove must be left ready to receive filling material that is provided as part of finish floor covering work.

3.12 CURING AND PROTECTION

ACI 301 Section 5, unless otherwise specified. Begin curing immediately following form removal. Avoid damage to concrete from vibration created by blasting, pile driving, movement of equipment in the vicinity, disturbance of formwork or protruding reinforcement, and any other activity resulting in ground vibrations. Protect concrete from injurious action by sun, rain, flowing water, frost, mechanical injury, tire marks, and oil stains. Do not allow concrete to dry out from time of placement until the expiration of the specified curing period. Do not use membrane-forming compound on surfaces where appearance would be objectionable, on any surface to be painted, where coverings are to be bonded to the concrete, or on concrete to which other concrete is to be bonded. If forms are removed prior to the expiration of the curing period, provide another curing procedure specified herein for the remaining portion of the curing period.

3.12.1 Curing Periods

ACI 301 Section 5, except 10 days for retaining walls, pavement or chimneys. Begin curing immediately after placement. Protect concrete from premature drying, excessively hot temperatures, and mechanical injury; and maintain minimal moisture loss at a relatively constant temperature for the period necessary for hydration of the cement and hardening of the concrete. The materials and methods of curing are subject to approval by the Contracting Officer.

3.12.2 Curing Formed Surfaces

Accomplish curing of formed surfaces, including undersurfaces of girders, beams, supported slabs, and other similar surfaces by moist curing with forms in place for full curing period or until forms are removed. If forms are removed before end of curing period, accomplish final curing of formed surfaces by any of the curing methods specified above, as applicable.

3.12.3 Curing Unformed Surfaces

Accomplish initial curing of unformed surfaces, such as monolithic slabs, floor topping, and other flat surfaces, by membrane curing.

Unless otherwise specified, accomplish final curing of unformed surfaces by any of curing methods specified, as applicable.

Accomplish final curing of concrete surfaces to receive liquid floor hardener of finish flooring by moisture-retaining cover curing.

3.12.4 Temperature of Concrete During Curing

When temperature of atmosphere is 5 degrees C and below, maintain temperature of concrete at not less than 13 degrees C throughout concrete curing period or 7 degrees C when the curing period is measured by maturity. When necessary, make arrangements before start of concrete placing for heating, covering, insulation, or housing as required to maintain specified temperature and moisture conditions for concrete during curing period.

When the temperature of atmosphere is 27 degrees C and above or during other climatic conditions which cause too rapid drying of concrete, make arrangements before start of concrete placing for installation of wind breaks, of shading, and for fog spraying, wet sprinkling, or moisture-retaining covering of light color as required to protect concrete during curing period.

Changes in temperature of concrete must be uniform and not exceed 3 degrees C in any 1 hour nor 27 degrees C in any 24-hour period.

3.12.5 Protection from Mechanical Injury

During curing period, protect concrete from damaging mechanical disturbances, particularly load stresses, heavy shock, and excessive vibration and from damage caused by rain or running water.

3.12.6 Protection After Curing

Protect finished concrete surfaces from damage by construction operations.

3.13 FIELD QUALITY CONTROL

3.13.1 Sampling

ASTM C172/C172M. Collect samples of fresh concrete to perform tests specified. ASTM C31/C31M for making test specimens.

3.13.2 Testing

3.13.2.1 Slump Tests

ASTM C143/C143M. Take concrete samples during concrete placement/discharge. The maximum slump may be increased as specified with the addition of an approved admixture provided that the water-cementitious material ratio is not exceeded. Perform tests at commencement of concrete placement, when test cylinders are made, and for each batch (minimum) or every 16 cubic meters (maximum) of concrete.

3.13.2.2 Temperature Tests

Test the concrete delivered and the concrete in the forms. Perform tests in hot or cold weather conditions (below 10 degrees C and above 27 degrees C) for each batch (minimum) or every 16 cubic meters (maximum) of concrete, until the specified temperature is obtained, and whenever test cylinders and slump tests are made.

3.13.2.3 Compressive Strength Tests

ASTM C39/C39M. Make six 100 mm by 200 mm test cylinders for each set of tests in accordance with ASTM C31/C31M, ASTM C172/C172M and applicable requirements of ACI 305R and ACI 306R. Take precautions to prevent evaporation and loss of water from the specimen. Test two cylinders at 7 days, two cylinders at 28 days, and hold two cylinder in reserve. Take samples for strength tests of each mix design of concrete placed each day not less than once a day, nor less than once for each 75 cubic meters of concrete for the first 380 cubic meters, then every 380 cubic meters thereafter, nor less than once for each 500 square meters of surface area for slabs or walls. For the entire project, take no less than five sets of samples and perform strength tests for each mix design of concrete placed. Each strength test result must be the average of two cylinders from the same concrete sample tested at 28 days. Concrete compressive tests must meet the requirements of ACI 318 Section 5.6. Retest locations represented by erratic core strengths. Where retest does not meet concrete compressive strength requirements submit a mitigation or remediation plan for review and approval by the contracting officer. Repair core holes with nonshrink grout. Match color and finish of adjacent concrete.

3.13.2.4 Air Content

ASTM C173/C173M or ASTM C231/C231M for normal weight concrete. Test air-entrained concrete for air content at the same frequency as specified for slump tests.

3.13.2.5 Ion Concentration

ACI 318. Determine water soluble ion concentration in accordance with ASTM C1218/C1218M. Perform test once for each mix design.

3.13.2.6 Strength of Concrete Structure

The strength of the concrete structure will be considered to be deficient if any of the following conditions are identified:

Failure to meet compressive strength tests as evaluated

Reinforcement not conforming to requirements specified

Concrete which differs from required dimensions or location in such a manner as to reduce strength

Concrete curing and protection of concrete against extremes of temperature during curing, not conforming to requirements specified

Concrete subjected to damaging mechanical disturbances, particularly load stresses, heavy shock, and excessive vibration

Poor workmanship likely to result in deficient strength

Where the strength of the concrete structure is considered deficient submit a mitigation or remediation plan for review and approval by the contracting officer.

3.13.2.7 Non-Conforming Materials

Factors that indicate that there are non-conforming materials include (but not limited to) excessive compressive strength, inadequate compressive strength, excessive slump, excessive voids and honeycombing, concrete delivery records that indicate excessive time between mixing and placement, or excessive water was added to the mixture during delivery and placement. Any of these indicators alone are sufficient reason for the Contracting Officer to request additional sampling and testing.

Investigations into non-conforming materials must be conducted at the Contractor's expense. The Contractor must be responsible for the investigation and must make written recommendations to adequately mitigate or remediate the non-conforming material. The Contracting Officer may accept, accept with reduced payment, require mitigation, or require removal and replacement of non-conforming material at no additional cost to the Government.

3.13.2.8 Testing Concrete Structure for Strength

When there is evidence that strength of concrete structure in place does not meet specification requirements or there are non-conforming materials, make cores drilled from hardened concrete for compressive strength determination in accordance with ASTM C42/C42M, and as follows:

Take at least three representative cores from each member or area of concrete-in-place that is considered potentially deficient. Location of cores will be determined by the Contracting Officer.

Test cores after moisture conditioning in accordance with ASTM C42/C42M if concrete they represent is more than superficially wet under service.

Air dry cores, (16 to 27 degrees C with relative humidity less than 60 percent) for 7 days before test and test dry if concrete they represent is dry under service conditions.

Strength of cores from each member or area are considered satisfactory if their average is equal to or greater than 85 percent of the 28-day design compressive strength of the class of concrete.

Core specimens will be taken and tested by the Government. If the results of core-boring tests indicate that the concrete as placed does not conform to the drawings and specification, the cost of such tests and restoration required must be borne by the Contractor.

Fill core holes solid with patching mortar and finished to match adjacent concrete surfaces.

Correct concrete work that is found inadequate by core tests in a manner approved by the Contracting Officer.

3.14 REPAIR, REHABILITATION AND REMOVAL

Before the Contracting Officer accepts the structure the Contractor must inspect the structure for cracks, damage and substandard concrete placements that may adversely affect the service life of the structure. A report documenting these defects must be prepared which includes recommendations for repair, removal or remediation must be submitted to the Contracting Officer for approval before any corrective work is accomplished.

3.14.1 Crack Repair

Prior to final acceptance, all cracks in excess of 0.50 mm wide must be documented and repaired. The proposed method and materials to repair the cracks must be submitted to the Contracting Officer for approval. The proposal must address the amount of movement expected in the crack due to temperature changes and loading.

3.14.2 Repair of Weak Surfaces

Weak surfaces are defined as mortar-rich, rain-damaged, uncured, or containing exposed voids or deleterious materials. Concrete surfaces with weak surfaces less than 6 mm thick must be diamond ground to remove the weak surface. Surfaces containing weak surfaces greater than 6 mm thick must be removed and replaced or mitigated in a manner acceptable to the Contracting Officer.

3.14.3 Failure of Quality Assurance Test Results

Proposed mitigation efforts by the Contractor must be approved by the Contracting Officer prior to proceeding.

-- End of Section --

ism

June 13, 2014

Mr. William R. Herrmann, PE, CEM
Austin Brockenbrough & Associates, LLP
1011 Boulder Springs Drive
Suite 200
Richmond, VA 23225

Re: Report of Geotechnical Study
P1701 Construct Fuel Storage Facility
Camp Lemonnier, Djibouti, Africa
ISM Project No. 2012-013.3

Dear Mr. Nodes:

In accordance with our scope proposed and subsequently released on April 14, 2014, ISM Services Incorporated has completed the requested geotechnical study. This study was completed with the assistance of Froehling & Robertson, Inc. The geotechnical study was then completed on June 13, 2014.

Attached is the completed geotechnical study. ISM Services Incorporated has reviewed this report and does not take any exceptions to it. We formally submit this for your use on this project.

Do not hesitate to contact us should you have any questions or require any additional information.

Respectfully,

Matthew W. Anderson, PE
Division Manager – Technical Services

Enclosures: F&R Report of Geotechnical Evaluations – June 13, 2014

www.ism-corp.us
404 Browning Court, Suite B, Purcellville, VA 20132
(724) 415-9842

THIS PAGE HAS BEEN INTENTIONALLY LEFT BLANK

FROEHLING & ROBERTSON, INC.

June 13, 2014

Report of
Geotechnical Evaluations

P1701 Construct Fuel Storage Facility
Camp Lemonnier
Djibouti, Africa

Prepared For:
ISM Services, Inc.
404 Browning Court, Suite B
Purcellville, Virginia 20132

F&R Record No. 61S-0016

Report of Geotechnical Evaluations

P1701 Construct Fuel Storage Facilities
Camp Lemonnier
Djibouti, Africa

Prepared For:
ISM Services, Inc.
404 Browning Court, Suite B
Purcellville, Virginia 20132

By:
Froehling & Robertson, Inc.
Greenbrier Commerce Park
833 Professional Place, W.
Chesapeake, Virginia 23320

COMMONWEALTH OF VIRGINIA
JOHN P. SENSABAUGH
Lic. No. 015788
6/13/2014
PROFESSIONAL ENGINEER

June 13, 2014

SINCE 1881

FROEHLING & ROBERTSON, INC.
Engineering Stability Since 1881

Greenbrier Commerce Park
833 Professional Place, W.
Chesapeake, Virginia 23320-3601
T 757.436.1111 I F 757.436.1674

June 13, 2014

F&R Record No. 61S-0016
F&R Report Serial No. S0016-GE01

ISM Services, Inc.
404 Browning Court, Suite B
Purcellville, Virginia 20132

Attention: Mr. Matthew W. Anderson, P.E.

Subject: **Report of Geotechnical Evaluations**
P1701 Construct Fuel Storage Facilities
Camp Lemonnier
Djibouti, Africa

Dear Mr. Anderson:

The enclosed report presents the results of the subsurface exploration program and geotechnical engineering evaluation undertaken by Froehling & Robertson, Inc. (F&R), in connection with the above-referenced project. Our services were performed in general accordance with the Consulting Services Subcontracting Agreement, dated April 15, 2014, between ISM Services, Inc. (ISM), and Froehling & Robertson, Inc. (F&R), and F&R Proposal Nos. 1461-0617G and 1461-0617G.1 dated February 28, 2014.

The report presents our understanding of the project information, reviews our exploration procedures, describes the general subsurface conditions at the boring locations, and presents our evaluations, conclusions, and recommendations. There are important limitations to this and all geotechnical reports. Some of these limitations are discussed in the information prepared by ASFE, Inc., provided in Appendix I of this report. We ask that you review the referenced ASFE information.

We have enjoyed working with you on this project, and we are prepared to assist you with the recommended quality assurance monitoring and testing services during construction. Please contact us if you have any questions regarding this report or if we may be of further service.

Sincerely,

FROEHLING & ROBERTSON, INC.

John P. Sensabaugh, P.E.
Senior Engineer

Marving L. Farmer, P.E.
Senior Engineer, Branch Manager

Distribution: 2cc: Client

F:\Projects 61S\61S-0016 (ISM Services, Inc. - Djibouti - P1701 Construct Fuel Storage Facilities)\Geo Report\61S-0016.S0016-GEO1.docx

TABLE OF CONTENTS

SECTION

PAGE

EXECUTIVE SUMMARY 1

1.0 PURPOSE & SCOPE OF SERVICE 2

2.0 PROJECT INFORMATION 2

2.1 PROPOSED CONSTRUCTION 2
2.2 SUBSURFACE SOIL INFORMATION 4

3.0 EXPLORATION PROCEDURES 5

3.1 SUBSURFACE EXPLORATION 5
3.2 LABORATORY DATA 5

4.0 SUBSURFACE CONDITIONS 6

4.1 SITE GEOLOGY 6
4.2 GENERALIZED SUBSURFACE STRATIGRAPHY 7
4.3 GROUNDWATER DATA 8
4.4 SURFICIAL MATERIALS 8

5.0 GEOTECHNICAL ANALYSIS PROCEDURES 9

6.0 DESIGN RECOMMENDATIONS 10

6.1 GENERAL 10
6.2 FUEL TANK FOUNDATIONS 10
6.3 BUILDING AND CANOPY FOUNDATIONS 10
6.4 GENERATOR AND EQUIPMENT PADS 10
6.5 SEISMIC DESIGN CRITERIA 11
6.6 LIQUEFACTION EVALUATIONS 11
6.7 SOIL CORROSION POTENTIAL 11
6.8 EXPANSIVE SOIL EVALUATION 12
6.9 LATERAL EARTH PRESSURES 12
6.10 PAVEMENT SECTION THICKNESS RECOMMENDATIONS 14

7.0 CONSTRUCTION RECOMMENDATIONS 15

7.1 GENERAL 15
7.2 SITE PREPARATION 15
7.3 STRUCTURAL FILL 16
7.4 SHALLOW FOUNDATION CONSTRUCTION 17
7.5 GROUNDWATER CONDITIONS FOR EXCAVATIONS 17
7.6 TEMPORARY EXCAVATION RECOMMENDATIONS 17

8.0 CONTINUATION OF SERVICES 18

9.0 LIMITATIONS 18

10.0 REFERENCES 20

APPENDICES

APPENDIX I

ASFE Publication
"Important Information About Your Geotechnical Engineering Report"

APPENDIX II

Boring Location Plan

APPENDIX III

GER Boring Logs (GB-36, GB-39, GB-40, GB-41, GB-42, GB-47, GB-48 and GB-58)

APPENDIX IV

GER Laboratory Test Results

APPENDIX V

PCASE Pavement Design Reports

EXECUTIVE SUMMARY

This Executive Summary is provided as a brief overview of our geotechnical engineering evaluation for the project and is not intended to replace more detailed information contained elsewhere in this report. As an overview, this summary inherently omits details that could be very important to the proper application of the provided geotechnical design recommendations. This report should be read in its entirety prior to implementation into design and construction.

The subsurface soil conditions at Camp Lemonnier are reported to consist of varying interbedded layers of clay, silt and sand. The borings located in the near vicinity of the project site indicate that the sands include varying amounts of cemented shells, shell fragments and gravel. The boring data indicates that the consistency of the clay and silt generally ranges from stiff to hard, and the relative density of the sands ranges from medium dense to very dense.

The proposed fuel tanks, buildings, canopies and equipment pads may be supported by conventional shallow foundations (mat or spread footings) bearing in approved natural subgrade soils or compacted structural fill. Total maximum settlement of the fuel tanks under the provided foundation loading of approximately 108 kPa is expected to be on the order of 30 mm. Total maximum settlement of the building foundations, canopy foundations and equipment pads loaded to a maximum soil bearing pressure of 145 kPa is expected to be on the order of 12 mm.

The existing soils at Camp Lemonnier are reported to possess high chloride and sulfate contents, and are considered to have a relatively high potential for corrosion of ferrous metals and standard concrete materials. It is recommended that appropriate corrosion protection be provided for buried metal pipes. Special concrete mix designs should be used for concrete exposed to site soils.

1.0 PURPOSE & SCOPE OF SERVICE

The purpose of our geotechnical engineering evaluations was to provide foundation and pavement section design recommendations for the referenced project, and to comment on the geotechnical aspects of the proposed construction.

F&R's scope of services included the following:

- Reviewed provided Geotechnical Data Reports and Reports of Geotechnical Exploration that were prepared by GeoEnvironmental Resources, Inc. (GER) for other projects located in the vicinity of the project site,
- Performed geotechnical engineering evaluations with respect to the proposed construction, and
- Preparation of this geotechnical report by professional engineers.

Our scope of services did not include visits to the project site, subsurface explorations or laboratory soils testing.

2.0 PROJECT INFORMATION

2.1 Proposed Construction

The project will consist of various improvements to the existing fuel farm at Camp Lemonnier in Djibouti, Africa. The proposed project will include the following:

- Two, 15,000 BL Jet A-1 Aviation Turbine (Jet) Fuel Operating Tanks,
- Two, 1,200 GPM Pump Houses,
- Truck Loading and Off-Loading Facilities,
- Filter Building,
- POL Operations Building,
- Emergency Generator and Related Equipment,
- Refueler Truck Parking,
- New Road and Parking Lot Pavements.

The fuel tanks will be supported on concrete mat foundations that will bear at depths of approximately 0.5 meters to 2.5 meters below the existing ground surface. The mat foundations will have a diameter of approximately 24.5 meters. The center-to-center distance between the tanks will be approximately 37.5 meters.

The fuel tanks will be covered with soil and a concrete cover will be constructed on the soil surface. The thickness of the soil and concrete cover above the tanks is expected to be approximately 1.2 meters. The thickness of the concrete cover is expected to be in the range of 100 mm to 300 mm.

The pump houses will be constructed on top of the tanks, with the pump house loading transferred to the tank foundations.

Total loading on the tank foundations, including the weight of the pump houses, soil and concrete cover is expected to be approximately 108 kPa.

The total height of the fill and concrete cover immediately adjacent to the fuel tanks, and in the area between the tanks, will be approximately 8.5 meters. The surface of the fill and concrete cover will slope downward from above the tanks to the natural site grades at a maximum slope of 1.5 horizontal to 1 vertical.

The truck loading and off-loading facilities will include canopy structures and reinforced concrete pavement sections. Maximum column loads for the canopy structures are expected to be less than 225 kN.

The filter building and POL Operations Building will be one-story structures with concrete slab-on-grade design. Finished floor elevations are expected to be slightly above (±300 mm) the existing site grades. Wall loads are expected to be less than 45 kN/m and column loads are expected to be less than 225 kN.

Emergency generators and related equipment will be supported on concrete pads. Maximum foundation loading of the pads is expected to be less than 70 kPa.

Vehicular traffic at the truck loading and off-loading facilities and at the refueler truck parking area will consist of R-11 refueler trucks with total weights of approximately 300 kN. Traffic volume for these areas is expected to be approximately 24 trips per day.

Additional traffic within the fuel farm and at the POL Operations Building is expected to be limited to large pickup trucks and SUVs. Traffic volume in these areas is expected to be on the order of 40 trips per day.

2.2 Subsurface Soil Information

Subsurface information was provided to F&R in the form of various reports that were prepared by GeoEnvironmental Resources, Inc. These reports included:

- Report of Geotechnical Exploration, FY08 MCON Projects P914 and P906, Full Length Taxiway and Fuel Farm, Combined Joint Task Force – Horn of Africa, Camp Lemonier, Djibouti, Djibouti, dated August 29, 2007,
- Report of SASW Seismic Testing for Camp Lemonier Djibouti, Conducted as part of the FY10 Security Fence and Roads Projects at Camp Lemonier, Republic of Djibouti, Africa, dated July 30, 2009,
- Geotechnical Data Report, URS-IAP Task Order 0008 Projects Fuel Farm, Galley, Maintenance Hangar and Water Production Sites, Camp Lemonier, Djibouti, dated August 21, 2009,
- Report of Geotechnical Exploration, FY10 Projects P235, P912 and P916, Security Fence and Roads, Camp Lemonier, Djibouti, dated October 9, 2009,
- Geotechnical Data Report, NAVFAC Atlantic, FY11 and FY12 MCON Projects, Camp Lemonier, Djibouti, dated January 15, 2010.

A project site visit, site-specific soil test borings and laboratory testing was not included in the requested scope of services for this project.

Pertinent information obtained from these reports is referenced in the form of footnotes in this report.

3.0 EXPLORATION PROCEDURES

3.1 Subsurface Exploration

The boring logs in the provided reports indicate that the borings were performed with a CME 45C drill rig equipped with an automatic hammer. Research has shown that the Standard Penetration Resistance (N-value) determined by the automatic hammer is different than the N-value determined by the safety hammer method. Most correlations that are published in the technical literature are based on the N-value determined by the safety hammer method. This is commonly termed N_{60} as the rope and cathead with a safety hammer delivers about 60 percent of the theoretical energy delivered by a 622.72 N hammer falling 762 mm. Several researchers have proposed correction factors for the use of hammers other than the safety hammer. The correction is made by the following equation:

$$N_{60} = N_{field}C_E$$

where N_{field} is the value recorded in the field, and C_E is the drill rod energy ratio for the hammer used.

Automatic hammer calibration data was not included in the provided reports. In lieu of this information, a value of 1.3 was used for C_E in accordance with guidelines provided in the *Performance and Use of the Standard Penetration Test in Geotechnical Engineering Practice* manual published by the Center for Geotechnical Practice and Research at the Virginia Polytechnical Institute and State University (1, pg. 11). The calculated N_{60} values were used in our geotechnical evaluations.

3.2 Laboratory Data

Laboratory data obtained from the provided documents is referenced in footnotes in this report. A summary of the laboratory test results (2, Appendix C) for samples obtained from the soil test borings referenced in this report are provided in Appendix IV.

4.0 SUBSURFACE CONDITIONS

4.1 Site Geology

The following description of the site geology was included in the provided reports (2, pg. 1):

"The Republic of Djibouti is located at the convergence of the Gulf of Aden and the Red Sea. The general area is considered a low latitude subtropical desert with Koppen climate classification of "BWh." The site is in the extreme eastern portion of the Armhara Plateau geologic province and borders on the northern edge of the Somali geologic province. The site is close to the junction of three seismically active rift valleys; the Red Sea to the northwest, the Gulf of Aden to the east and the East African Rift Valley to the southwest. Several significant earthquakes associated with these rift valleys and adjacent fault systems have occurred in recent history. In the past few centuries there have been more than 15 significant earthquakes ranging in magnitude from 4.7 to 6.6 on the Richter scale that originated within a 500 kilometer radius of the camp.

Modern basaltic volcanism associated with continental rifting is evident along the Asai Valley and the Ardoucoba volcanic fissure system, which is located approximately 100 kilometers to the west of Camp Lemonier. It's last recorded eruption was in 1978 and covered an area of approximately 3 square kilometers with approximately $12x10^6$ cubic meters of lava.

The local geologic profile consists primarily of silt and clay deposits interbedded with layers of sand, gravel and cobbles. These sediments were transported and deposited as part of the distal facies of an unconsolidated arid alluvial fan/deltaic system. Sediments were derived from tertiary age intrusive and extrusive igneous rock sources to the west and southwest. Large corals, shell material and limestone rock exposed in several pits east of the site suggest that the sediments may have pro-graded into coral reef and limestone deposits. Generally, the shallow soils range from Pleistoncene to Holocene age (approximately 2 million years and less)."

4.2 Generalized Subsurface Stratigraphy

The following Figure 1 is a composite profile that was developed using data provided on the boring logs that are included in Appendix III. These borings were selected for our evaluations because they include the deepest borings that have been performed in the near vicinity of the project site.

Figure 1 – Composite Profile

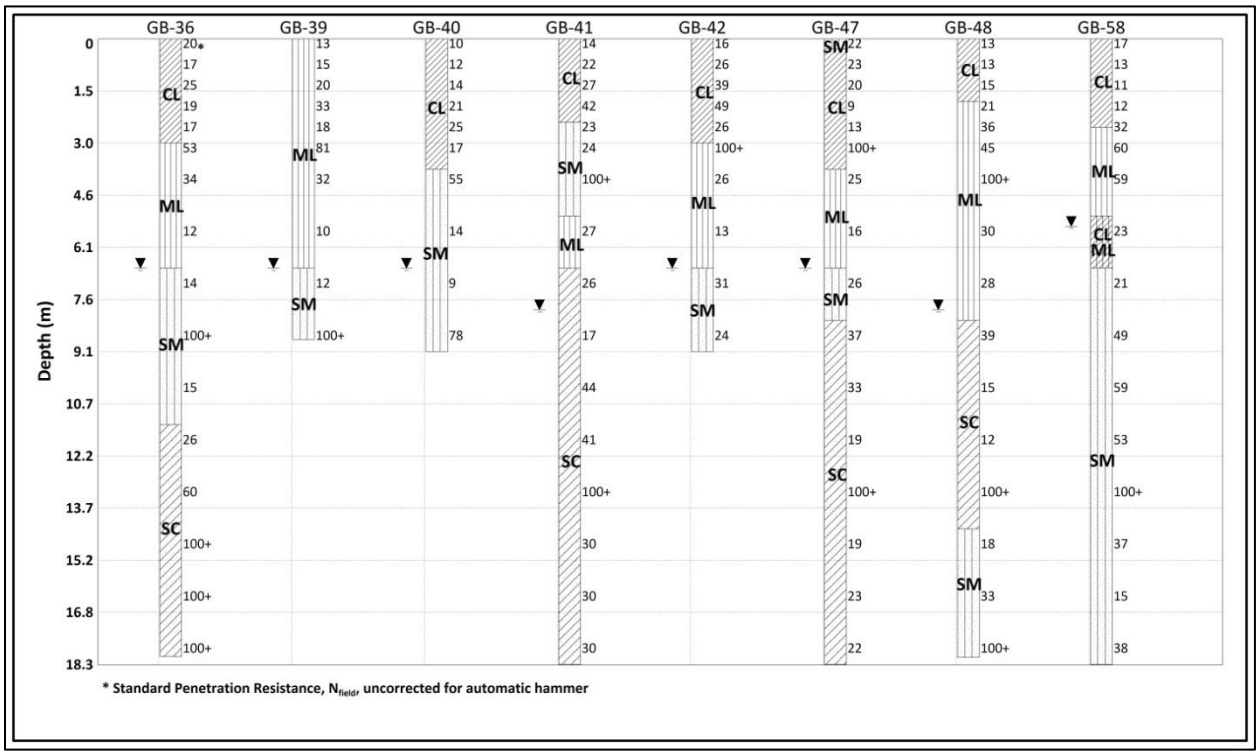

Figure 1 Notes

- CL – Sandy CLAY with trace to some silt, or Silty CLAY with trace to some sand, stiff to hard,
- ML – Clayey SILT with trace to some sand, or Sandy SILT with trace gravel and shell fragments, stiff to hard,
- SM – Silty SAND, fine to coarse, with trace to some clay, cemented shells, shell fragments and gravel, medium dense to very dense,
- SC – Clayey SAND, fine to coarse, with trace to some cemented shell, shell fragments and gravel, medium dense to very dense.

4.3 Groundwater Data

Groundwater was reported on the referenced boring logs between the depths of approximately 5.49 meters and 7.92 meters below the existing ground surface, with most of the borings reporting a groundwater depth of approximately 6.71 meters. The groundwater level is expected to fluctuate with seasonal changes, periods of heavy or little rainfall, pumping from wells, and other factors. Therefore, the field measurements do not reveal the actual year-round groundwater conditions.

4.4 Surficial Materials

Surficial soil was not identified on the referenced boring logs. Surficial soil is typically dark-colored soil material containing roots, fibrous matter, and/or other organic components, and is generally unsuitable for engineering purposes.

5.0 GEOTECHNICAL ANALYSIS PROCEDURES

Unit loading under the fuel tank foundations was provided as approximately 108 kPa. Unit loading under the fill soil was determined using an estimated moist density of 2,180 kg/m^3. This value is based on average moisture-density relationship test results (3, Appendix C) using the maximum density as determined by ASTM D1557 and the optimum moisture content.

Vertical stress due to foundation and fill soil loading at the tank locations was based on Westergaard influence charts (4, pg. 7.1-177 and 178). It is noted that significant stress increase is expected to occur to a depth of approximately 30 meters; however, the deepest soil test borings in the vicinity of the project site were terminated at depths of approximately 18 meters. The evaluations were necessarily based on the assumption that the soils between the depths of 18 meters and 30 meters are consistent with the soils encountered by the soil test borings near the 18-meter depth. Previous seismic testing (5, Figures 5 through 9) that extended to depths of 30 meters indicates generally uniform shear wave velocity in the soils below depths of approximately 12 meters to 18 meters, which supports this assumption.

Settlement evaluations for the proposed foundations were performed using elastic theory. The soil modulus was based on published correlations with soil type and consistency (6, pg. D-5). A soil modulus of 95,750 kPa was used for soils encountered to a depth of approximately 6.7 meters. A soil modulus of 143,640 kPa was used for soils below a depth of approximately 6.7 meters.

It is noted that site-specific soil test borings were not performed for this project. The evaluations are based on provided subsurface data and necessarily assumes uniform subsurface soil conditions across the project site.

Bearing capacity evaluations were performed using conventional methods. Estimated values for friction angle (Ø), cohesion (c) and soil unit weight were determined using correlations with soil descriptions and consistency/relative density information obtained from the provided boring logs.

Pavement evaluations were performed using PCASE software (Version 2.09.01) and the guidelines provided in UFC 3-250-01FA. Data reports obtained from the PCASE software are included in Appendix V of this report.

6.0 DESIGN RECOMMENDATIONS

6.1 General

The following recommendations are based on our evaluations using the provided subsurface soil data. Site-specific soil test borings and laboratory testing was not included in the provided data. As such, our evaluations are based on a generalized subsurface stratigraphy that necessarily assumes uniform subsurface soil conditions across the project site.

6.2 Fuel Tank Foundations

The fuel tanks could be supported as currently designed on concrete mat foundations. The greatest amount of settlement is expected to occur along the tank perimeter at a location nearest to the adjacent tank. This settlement is expected to be on the order of 30 mm. Total settlement around the toe of the concrete covered slope is expected to be on the order of 8 mm.

Differential settlement across each tank resulting from differential loading on uniform subsurface soil conditions is expected to be on the order of 8 mm. Varying subsurface soil conditions, if present in the immediate vicinity of the tanks, may result in additional differential settlement.

6.3 Building and Canopy Foundations

The planned buildings and canopies could be supported by conventional spread footings bearing in approved natural subgrade soils, or compacted structural fill, and sized for an allowable soil bearing pressure of 145 kPa. Total settlement of these foundations is expected to be less than 12 mm.

6.4 Generator and Equipment Pads

Generator and equipment pads could be supported in approved natural subgrade soils, or compacted structural fill, and sized for an allowable soil bearing pressure of 145 kPa. Total settlement of these foundations is expected to be less than 12 mm.

6.5 Seismic Design Criteria

The following recommendations are based on Section 1613.3.2 of the 2012 International Building Code (IBC) and ASCE 7-10.

Based on provided soil shear wave data (5, pg. 2), A Site Class C is recommended for the project site.

6.6 Liquefaction Evaluations

An evaluation was performed with respect to potential liquefaction of the subsurface soils encountered by the soil test borings. The evaluation was performed using methods developed by Seed and Idriss (1982) and modified by Youd (2001).

The evaluation was based on average N-values (corrected to N_{60}) from the boring logs included in Appendix III and soil classification. A Peak Ground Acceleration (PGA) of 0.39 g in accordance with data provided in Table F-3 of UFC 3-301-01. An earthquake magnitude 7.5 was used per provided information (7, pg. 10)

The evaluation was based on data obtained from the 2008 NSHMP PSHA Interactive Deaggregation web site. Using this data, the calculated safety factor was found to be approximately 1.6, which is above the typically recommended minimum value of 1.1. As such, the site is considered to possess a suitable safety factor with respect to potential liquefaction.

6.7 Soil Corrosion Potential

The provided data (2, Appendix C) indicates that the soils at Camp Lemonnier possess high chloride contents, ranging from 1,740 to 11,666 parts per million (ppm), and high sulfate content, ranging from 1,642 to 9,019 ppm. A plot of this data is included in Appendix IV of this report.

The test data indicates that the soils have a relatively high potential for corrosion of ferrous metals and standard concrete materials. It is recommended that appropriate corrosion protection be provided for buried metal pipes. Special concrete mix designs should be used for concrete exposed to site soils.

6.8 Expansive Soil Evaluation

The soils reported to exist at Camp Lemonnier consist of low plastic clays and silts, or cohesionless sands. Based on soil classification, these soils are judged to have a low potential for shrink-swell activity. As a result, the proposed construction will not be significantly influenced by expansive soil conditions.

6.9 Lateral Earth Pressures

The following information is provided to aid in analysis of soil loads on concrete structures. These wall recommendations should not be correlated for use in any other wall design.

Earth pressures on walls are influenced by structural design of the walls, conditions of wall restraint, methods of construction and/or compaction, and the strength of the materials being restrained. The most common conditions assumed for earth retaining wall design are the active and at-rest conditions. Active conditions apply to relatively flexible earth retention structures, such as freestanding walls, where some movement and rotation may occur to mobilize soil shear strength. Walls that are rigidly restrained, and not expected to rotate, require design using at-rest earth pressures.

A third condition, the passive state, represents the maximum possible pressure when a structure is pushed against the soil, and is used in wall foundation design to help resist active or at-rest pressures. Because significant wall movements are required to develop the passive pressure, the total calculated passive pressure should be reduced by one-half to two-thirds for design purposes.

Based on the provided data, the fill soils are expected to possibly range from silty sands (SM) to low plasticity clays (CL), and most likely some combination of these soils in the form of either clayey sands (SC) or sandy clays (CL).

Lateral earth pressures for use in wall design will be controlled by the soils providing the highest active and at-rest pressures and the lowest passive pressure resistance. Evaluations were performed for both silty sands and for low plasticity clays in order to determine which would control in wall design. Soil properties used in our evaluations for silty sands included an estimated moist unit weight of 2,000 kg/m^3 and a friction angle of 30°. Soil properties used in our evaluations for low plasticity clays included an estimated moist unit weigh of 2,180 kg/m^3 and a cohesion value for compacted soils of 95 kPa.

With respect to active pressure, silty sand was found to result in the greatest force.

With respect to passive pressure resistance, silty sand was generally found to provide the least resistance when the height of the fill is 3.6 meters or less. Low plasticity clay was found to provide the least passive pressure resistance in the lower portion of fills exceeding 3.6 meters in height; however, the passive pressure resistance of the sand was found to be not much less than that of clay. In consideration that it is recommended that passive pressure values should be reduced by one-half to two-thirds for design purposes, and in consideration that the clay soils will likely have a friction angle component that was not included in the evaluations, use of silty sand soil properties for evaluating passive pressure resistance is judged to be appropriate.

With respect to at-rest pressures, the design coefficient for compacted soils may be on the order of 1.0 (8, pg. 7.2-76). As such, the equivalent fluid pressure would equal the moist unit weight of the fill soil.

Based on the preceding considerations, recommended lateral earth pressure coefficients and equivalent fluid pressure parameters for design of walls using granular backfill are provided in the following Table 1.

Table 1 - Lateral Earth Pressure Design Data

Earth Pressure Conditions	Coefficient	Recommended Equivalent Fluid Pressure – Drained [(kg/m^2)/m depth)][1]
Active (K_a)	0.33	202
At-Rest (K_o)	1.0	670
Passive (K_p)	3.00	1,850
NOTE: 1 – does not include a factor of safety		

An appropriate factor of safety should be applied to the recommended equivalent fluid pressures for wall design.

6.10 Pavement Section Thickness Recommendations

The following pavement sections are based on a design CBR value of 15 (7 pg. 15) and the traffic type/volume provided in Section 2.1 of this report.

Heavy Duty Asphalt Pavement Section (R-11 Refueler Truck Traffic):

100 mm	Bituminous Concrete
200 mm	Untreated Aggregate Base (CBR = 80)
300 mm	Compacted Natural Subgrade (CBR = 15)

Heavy Duty Concrete Pavement Section (R-11 Refuler Truck Traffic:

200 mm	Concrete Pavement (4.48 MPa Flexural Strength)
100 mm	Untreated Aggregate Base (CBR = 80)
300 mm	Compacted natural Subgrade (CBR = 15)

Light Duty Asphalt Pavement Section (Pickup and SUV Traffic):

50 mm	Bituminous Concrete
150 mm	Untreated Aggregate Base (CBR = 80)
300 mm	Compacted Natural Subgrade (CBR = 15)

All pavement subgrades should be prepared in accordance with the recommendations provided in Section 7.2 of this report. Pavement design and construction should be in accordance with the guidelines provided in UFC 3-250-01FA. Selection of the performance grade of asphalt cement should be made based on the anticipated traffic and climate at the project site.

It is noted that the guidelines provided in UFC 3-230-06A would require a drainage layer in the pavement sections due to the limited infiltration rate expected for the natural subgrade soils. However, in consideration of the dry climate and no freeze-thaw conditions, it is F&R's opinion that a drainage layer is not needed for the provided pavement sections.

The asphalt pavement section results provided by the PCASE software indicates that the aggregate base layer thickness for the light duty asphalt pavement section could be 100 mm and the aggregate base layer thickness for the heavy duty asphalt pavement section could be 150 mm. However, F&R recommends a minimum aggregate base thickness of 150 mm for light vehicles and a minimum aggregate base thickness of 200 mm for heavy vehicles.

The concrete pavement section results provided by the PCASE software indicates that the concrete pavement thickness could be 150 mm; however, a 200 mm thickness is recommended in order to provide proper cover over the reinforcing steel.

7.0 CONSTRUCTION RECOMMENDATIONS

7.1 General

The principal purpose of this section is to comment in general on the items related to foundation construction, earthwork and related geotechnical engineering aspects of construction that should be expected for this project. It is recommended that the geotechnical engineer be retained to provide soil engineering services during the actual site preparation and foundation construction phases of the project to perform appropriate evaluations to help assure that conditions encountered during construction are similar to conditions encountered in the borings. The geotechnical engineer can also assist in interpretation of differing subsurface conditions that may be encountered and recommend remedial work, if needed.

7.2 Site Preparation

The proposed areas of construction should be stripped of surficial soils and cleared of surface vegetation, organic materials, trees, tree stumps/roots, debris and any existing improvements to be abandoned. Stripping should be performed to a horizontal distance of at least 5 meters in plan dimension beyond the planned structure/pavement areas. Site drainage will be important during site work operations. During site work, positive drainage away from the area undergoing development should be maintained to reduce potential for deterioration of the exposed soil subgrade.

Upon completion of stripping operations and prior to installing fill to the planned elevations, the exposed subgrade soils should be proofrolled with a fully loaded dump truck or other pneumatic-tired vehicle of similar size and weight during a time of good weather and not while the site is wet as a result of recent rain. The purpose of proofrolling is to detect any isolated soft areas and to evaluate the general stability of the near surface subgrade soils.

Site stripping and proofrolling should be observed by project quality assurance personnel. Any areas that deflect (pump) during proofrolling should be over-excavated to firm material and be replaced with compacted structural fill, as recommended by the quality assurance personnel and as directed by the Contracting Officer. A contingency should be included in the contract

documents and project budget to address possible undercut excavation of unsuitable soils and replacement with imported structural fill, as necessary.

Following proofrolling operations, approved subgrade soils should be compacted to a depth of 300 mm to at least 95 percent of the maximum dry density as determined by ASTM D1557.

7.3 Structural Fill

Controlled structural fill material should be non-expansive and free of organic matter, debris, and particles larger than 50 mm in size. Proposed fill material should be subjected to laboratory tests consisting of, but not necessarily limited to, moisture density determinations, Atterberg limits, and sieve analysis. Controlled structural fill should classify per the Unified Soil Classification System (USCS) as SW, SP, SP-SM, SM, SC, CL or ML.

Fill materials should be placed in horizontal lifts with maximum height of 200 mm loose measure when compacted with a medium sized vibratory compactor operating in vibratory mode. In confined areas such as utility trenches, portable compaction equipment and thin lifts of 75 mm to 100 mm may be required to achieve specified degrees of compaction.

The structural fill should be compacted to at least 95 percent of the maximum dry density as determined by ASTM D1557. The compaction requirement may be reduced to a minimum of 90 percent in green areas. In general, we recommend that the moisture content of fill soils be maintained within three percentage points of the optimum moisture content as determined from the maximum dry density test. Excessively wet or excessively dry soils should not be used as fill material without proper drying or wetting. We recommend that the contractor have equipment on site during earthwork for both drying and wetting of fill soils.

Each lift of fill should be tested in order to confirm that the recommended degree of compaction is attained. Field density tests to verify fill compaction should be performed at an appropriate frequency for the area being tested with a minimum of three tests per lift. In confined areas, a greater frequency may be required. Testing areas may be increased and the frequencies reduced based on the location of the fill and discretion of the quality assurance personnel and Contracting Officer.

7.4 Shallow Foundation Construction

Shallow foundation subgrades should be observed, evaluated and verified for the design bearing pressure by the quality assurance personnel after excavation and prior to reinforcement steel placement. If low consistency soils are encountered during foundation construction, localized undercutting and/or in-place stabilization of foundation subgrades will be required. The actual need for, and extent of, undercutting should be based on field observations made by the quality assurance personnel at the time of construction.

Excavations for footings should be made in such a way as to provide bearing surfaces that are firm and free of loose, soft, wet or otherwise disturbed soils. Foundation concrete should not be placed on saturated subgrades. If such materials are allowed to remain below foundations, settlements will increase. Foundation excavations should be concreted as soon as practical after they are excavated. If an excavation is left open for an extended period, a thin mat of lean concrete should be placed over the bottom to lessen potential damage to the bearing surface from water or construction activities. Water should not be allowed to pond in any excavation.

7.5 Groundwater Conditions for Excavations

Groundwater for the purposes of this report is defined as water encountered below the existing ground surface. Based on the provided data, groundwater was generally encountered below a depth of approximately 6 meters, which is below the anticipated maximum excavation depth of 2 meters.

7.6 Temporary Excavation Recommendations

Based on our understanding of the project, maximum excavation depths are expected to be less than 2 meters. Mass excavations and other excavations required for construction of this project should be performed in accordance with the United States Department of Labor, Occupational Safety and Health Administration (OSHA) guidelines (29 CFR 1926, Subpart P, Excavations) or other applicable jurisdictional codes for permissible temporary side-slope ratios and/or shoring requirements. The OSHA guidelines require daily inspections of excavations, adjacent areas and protective systems by a “competent person” for evidence of situations that could result in cave-ins, indications of failure of a protective system, or other hazardous conditions. All excavated soils, equipment, building supplies, etc., should be placed away from the edges of the excavation at a distance equaling or exceeding the depth of the excavation. F&R cautions that the actual excavation slopes will need to be evaluated frequently each day by

the “competent person” and flatter slopes or the use of shoring may be required to maintain a safe excavation depending upon excavation specific circumstances.

Soil encountered to the expected depths of excavations may include Type C soils in accordance with the OSHA classification system for excavations.

8.0 CONTINUATION OF SERVICES

F&R recommends that we be given the opportunity to review the foundation plan and project specifications when these construction documents approach completion. This review evaluates whether the recommendations and comments provided herein have been understood and properly implemented. We also recommend that Froehling & Robertson, Inc., be retained for geotechnical engineering services during construction of the project. Our continued involvement on the project helps provide continuity for proper implementation of the recommendations discussed herein. These services are not part of the currently authorized scope of services.

9.0 LIMITATIONS

There are important limitations to this and all geotechnical studies. Some of these limitations are discussed in the information prepared by The Association of Engineering Firms Practicing in the Geosciences (ASFE), which is included in Appendix I. We recommend that you review the ASFE information.

This report has been prepared for the exclusive use of ISM Services, Inc., or their agents, for specific application to the P1701 Construct Fuel Storage Facilities project at Camp Lemonnier in Djibouti, Africa, in accordance with generally accepted soil and foundation engineering practices. No other warranty, express or implied, is made. Our conclusions and recommendations are based on design information and geotechnical subsurface data furnished to us at the time the work was performed, and generally accepted geotechnical engineering practice. The findings and recommendations do not reflect variations in subsurface conditions, which could exist in unexplored areas of the site. In areas where variations from the available subsurface data become apparent during construction, it will be necessary to re-evaluate our conclusions and recommendations based upon on-site observations of the conditions.

Regardless of the thoroughness of a subsurface exploration, there is the possibility that conditions in other areas will differ from those at the boring locations, that conditions are not as anticipated by the designers, or that the construction process has altered the soil conditions. Therefore, on-site quality assurance personnel should evaluate foundation construction to verify that the conditions anticipated in design actually exist. Otherwise, we assume no responsibility for construction compliance with the design concepts, specifications, or recommendations.

In the event that changes are made in the design or location of the proposed structures, the recommendations presented in this report shall not be considered valid unless the changes are reviewed by our firm and conclusions of this report modified and/or verified in writing. If this report is copied or transmitted to a third party, it must be copied or transmitted in its entirety, including text, attachments, and enclosures. Interpretations based on only a part of this report may not be valid.

10.0 REFERENCES

1. McGregor, Jeffrey A. and J. Michael Duncan, 1998, *Performance and Use of the Standard Penetration Test in Geotechnical Engineering Practice*, Center for Geotechnical Practice and Research, Virginia Polytechnic Institute and State University.

2. Crawley, III, P.E., Charles F. P., January 15, 2010, *Geotechnical Data Report, NAVFAC Atlantic, FY11 and FY12 MCON Projects, Camp Lemonier, Djibouti,* GeoEnvironmental Resources, Inc.

3. McKay, III, P.G, Samuel L. and Charles F.P. Crawley, III, P.E., August 29, 2007, *Report of Geotechnical Exploration, FY08 MCON Projects P914 and P906, Full Length Taxiway and Fuel Farm, Combined Joint Task Force–Horn of Africa, Camp Lemonier, Djibouti, Djibouti,* GeoEnvironmental Resources, Inc.

4. Naval Facilities Engineering Command, 1986, *Foundations and Earth Structures, Design Manual DM7.1*, U.S. Government Printing Office, Washington, DC 20402.

5. Crawley, III, P.E., Charles F. P. and Scott A. Barnhill, P.E., July 30, 3009, *Report of SASW Seismic Testing for Camp Lemonier, Djibouti,* GeoEnvironmental Resources, Inc.

6. U.S. Army Corps of Engineers, 1990, *Engineering and Design, Settlement Analysis*, *EM 1110-1-1904*, U.S. Army Corps of Engineers, Washington, DC 20314-1000

7. Crawley, III, P.E., Charles F. P. and Scott A. Barnhill, P.E., October 9, 2009, *Report of Geotechnical Exploration, FY10 Projects P235, P912 and P916, Security Fence and Roads, Camp Lemonier, Djibouti*, GeoEnvironmental Resources, Inc.

8. Naval Facilities Engineering Command, 1986, *Foundations and Earth Structures, Design Manual DM7.2*, U.S. Government Printing Office, Washington, DC 20402.

APPENDIX I

ASFE Publication
"Important Information About Your
Geotechnical Engineering Report"

Important Information About Your

Geotechnical Engineering Report

Subsurface problems are a principal cause of construction delays, cost overruns, claims, and disputes.

The following information is provided to help you manage your risks.

Geotechnical Services Are Performed for Specific Purposes, Persons, and Projects

Geotechnical engineers structure their services to meet the specific needs of their clients. A geotechnical engineering study conducted for a civil engineer may not fulfill the needs of a construction contractor or even another civil engineer. Because each geotechnical engineering study is unique, each geotechnical engineering report is unique, prepared *solely* for the client. No one except you should rely on your geotechnical engineering report without first conferring with the geotechnical engineer who prepared it. *And no one — not even you* — should apply the report for any purpose or project except the one originally contemplated.

Read the Full Report

Serious problems have occurred because those relying on a geotechnical engineering report did not read it all. Do not rely on an executive summary. Do not read selected elements only.

A Geotechnical Engineering Report Is Based on A Unique Set of Project-Specific Factors

Geotechnical engineers consider a number of unique, project-specific factors when establishing the scope of a study. Typical factors include: the client's goals, objectives, and risk management preferences; the general nature of the structure involved, its size, and configuration; the location of the structure on the site; and other planned or existing site improvements, such as access roads, parking lots, and underground utilities. Unless the geotechnical engineer who conducted the study specifically indicates otherwise, do not rely on a geotechnical engineering report that was:

- not prepared for you,
- not prepared for your project,
- not prepared for the specific site explored, or
- completed before important project changes were made.

Typical changes that can erode the reliability of an existing geotechnical engineering report include those that affect:

- the function of the proposed structure, as when it's changed from a parking garage to an office building, or from a light industrial plant to a refrigerated warehouse,
- elevation, configuration, location, orientation, or weight of the proposed structure,
- composition of the design team, or
- project ownership.

As a general rule, *always* inform your geotechnical engineer of project changes—even minor ones—and request an assessment of their impact. *Geotechnical engineers cannot accept responsibility or liability for problems that occur because their reports do not consider developments of which they were not informed.*

Subsurface Conditions Can Change

A geotechnical engineering report is based on conditions that existed at the time the study was performed. *Do not rely on a geotechnical engineering report* whose adequacy may have been affected by: the passage of time; by man-made events, such as construction on or adjacent to the site; or by natural events, such as floods, earthquakes, or groundwater fluctuations. *Always* contact the geotechnical engineer before applying the report to determine if it is still reliable. A minor amount of additional testing or analysis could prevent major problems.

Most Geotechnical Findings Are Professional Opinions

Site exploration identifies subsurface conditions only at those points where subsurface tests are conducted or samples are taken. Geotechnical engineers review field and laboratory data and then apply their professional judgment to render an opinion about subsurface conditions throughout the site. Actual subsurface conditions may differ—sometimes significantly—from those indicated in your report. Retaining the geotechnical engineer who developed your report to provide construction observation is the most effective method of managing the risks associated with unanticipated conditions.

A Report's Recommendations Are *Not* Final

Do not overrely on the construction recommendations included in your report. *Those recommendations are not final,* because geotechnical engineers develop them principally from judgment and opinion. Geotechnical engineers can finalize their recommendations only by observing actual

subsurface conditions revealed during construction. *The geotechnical engineer who developed your report cannot assume responsibility or liability for the report's recommendations if that engineer does not perform construction observation.*

A Geotechnical Engineering Report Is Subject to Misinterpretation

Other design team members' misinterpretation of geotechnical engineering reports has resulted in costly problems. Lower that risk by having your geotechnical engineer confer with appropriate members of the design team after submitting the report. Also retain your geotechnical engineer to review pertinent elements of the design team's plans and specifications. Contractors can also misinterpret a geotechnical engineering report. Reduce that risk by having your geotechnical engineer participate in prebid and preconstruction conferences, and by providing construction observation.

Do Not Redraw the Engineer's Logs

Geotechnical engineers prepare final boring and testing logs based upon their interpretation of field logs and laboratory data. To prevent errors or omissions, the logs included in a geotechnical engineering report should *never* be redrawn for inclusion in architectural or other design drawings. Only photographic or electronic reproduction is acceptable, *but recognize that separating logs from the report can elevate risk.*

Give Contractors a Complete Report and Guidance

Some owners and design professionals mistakenly believe they can make contractors liable for unanticipated subsurface conditions by limiting what they provide for bid preparation. To help prevent costly problems, give contractors the complete geotechnical engineering report, *but* preface it with a clearly written letter of transmittal. In that letter, advise contractors that the report was not prepared for purposes of bid development and that the report's accuracy is limited; encourage them to confer with the geotechnical engineer who prepared the report (a modest fee may be required) and/or to conduct additional study to obtain the specific types of information they need or prefer. A prebid conference can also be valuable. *Be sure contractors have sufficient time* to perform additional study. Only then might you be in a position to give contractors the best information available to you, while requiring them to at least share some of the financial responsibilities stemming from unanticipated conditions.

Read Responsibility Provisions Closely

Some clients, design professionals, and contractors do not recognize that geotechnical engineering is far less exact than other engineering disciplines. This lack of understanding has created unrealistic expectations that have led to disappointments, claims, and disputes. To help reduce the risk of such outcomes, geotechnical engineers commonly include a variety of explanatory provisions in their reports. Sometimes labeled "limitations" many of these provisions indicate where geotechnical engineers' responsibilities begin and end, to help others recognize their own responsibilities and risks. *Read these provisions closely.* Ask questions. Your geotechnical engineer should respond fully and frankly.

Geoenvironmental Concerns Are Not Covered

The equipment, techniques, and personnel used to perform a *geoenvironmental* study differ significantly from those used to perform a *geotechnical* study. For that reason, a geotechnical engineering report does not usually relate any geoenvironmental findings, conclusions, or recommendations; e.g., about the likelihood of encountering underground storage tanks or regulated contaminants. *Unanticipated environmental problems have led to numerous project failures.* If you have not yet obtained your own geoenvironmental information, ask your geotechnical consultant for risk management guidance. *Do not rely on an environmental report prepared for someone else.*

Obtain Professional Assistance To Deal with Mold

Diverse strategies can be applied during building design, construction, operation, and maintenance to prevent significant amounts of mold from growing on indoor surfaces. To be effective, all such strategies should be devised for the *express purpose* of mold prevention, integrated into a comprehensive plan, and executed with diligent oversight by a professional mold prevention consultant. Because just a small amount of water or moisture can lead to the development of severe mold infestations, a number of mold prevention strategies focus on keeping building surfaces dry. While groundwater, water infiltration, and similar issues may have been addressed as part of the geotechnical engineering study whose findings are conveyed in this report, the geotechnical engineer in charge of this project is not a mold prevention consultant; ***none of the services performed in connection with the geotechnical engineer's study were designed or conducted for the purpose of mold prevention. Proper implementation of the recommendations conveyed in this report will not of itself be sufficient to prevent mold from growing in or on the structure involved.***

Rely, on Your ASFE-Member Geotechncial Engineer for Additional Assistance

Membership in ASFE/The Best People on Earth exposes geotechnical engineers to a wide array of risk management techniques that can be of genuine benefit for everyone involved with a construction project. Confer with you ASFE-member geotechnical engineer for more information.

ASFE
The Best People on Earth

8811 Colesville Road/Suite G106, Silver Spring, MD 20910
Telephone: 301/565-2733 Facsimile: 301/589-2017
e-mail: info@asfe.org www.asfe.org

Copyright 2004 by ASFE, Inc. Duplication, reproduction, or copying of this document, in whole or in part, by any means whatsoever, is strictly prohibited, except with ASFE's specific written permission. Excerpting, quoting, or otherwise extracting wording from this document is permitted only with the express written permission of ASFE, and only for purposes of scholarly research or book review. Only members of ASFE may use this document as a complement to or as an element of a geotechnical engineering report. Any other firm, individual, or other entity that so uses this document without being an ASFE member could be committing negligent or intentional (fraudulent) misrepresentation.

IIGER06045.0M

APPENDIX II

Boring Location Plan

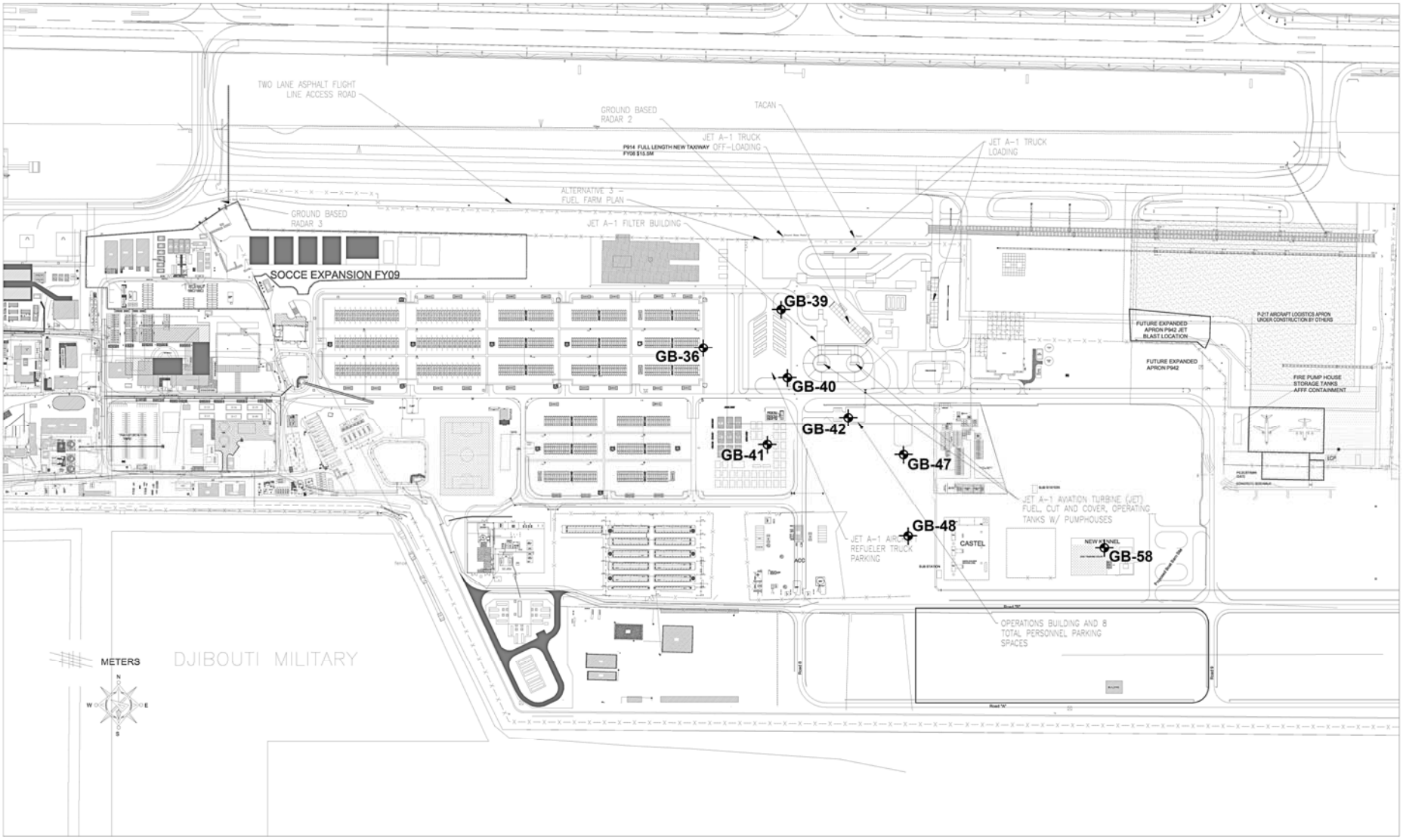

Approximate Location of GER Soil Test Boring

PLAN NORTH

ALTERNATIVE SITE 3 – OVERALL PLAN

SCALE: 1:2500

1:2500 0 50.00 100.00 250.00 m

NAVFAC

PRELIMINARY

Austin Brockenbrough ENGINEERING + CONSULTING

DEPARTMENT OF THE NAVY
NAVAL FACILITIES ENGINEERING COMMAND
NORFOLK, VIRGINIA
DJIBOUTI AFRICA
CAMP LEMONNIER

P1701 CONSTRUCT FUEL STORAGE FACILITIES

BORING LOCATION PLAN

SCALE: AS NOTED

PROJECT NO.:

WORK ORDER NO.:

NAVFAC DRAWING NO.:

SHEET VALUE OF 2

DRAWFORM REVISION: 10 MARCH 2008

APPENDIX III

GER Boring Logs GB-36, GB-39, GB-40, GB-41, GB-42, GB-47, GB-48 & GB-58
Boring Log Legend
Soil Classification Chart

LOG OF BORING NO. GB-36

FY11 & FY12 MCON Projects
Camp Lemonier, Djibouti
GER Project No. 110-5290

GER CONSULTING ENGINEERS

SURFACE ELEVATION, m: NORTH, m: 1276732 EAST, m: 299079 SHEET NO.: 1 OF 1

DEPTH, m	DESCRIPTION OF MATERIAL	SAMPLER BLOWS PER 150 mm	UNIT DRY WEIGHT, kN/m³	UNDRAINED SHEAR STRENGTH, kPa (□)	UNCORRECTED SPT N-VALUE, blows/0.3m (△)	PERCENT PASSING #200 SIEVE, %
0	**Sandy, Low Plasticity CLAY (CL)** Very stiff, dark reddish brown, trace to some silt	10 9 11 9 5 8 9 8 9 12 13 15 8 9 10 11 5 6 11 13 11 21 32 42			20, 17, 25, 19, 17	
3	**Clayey, Low Plasticity SILT (ML)** Very hard to stiff, brown, little to trace sand	8 18 16 19			53, 34	
5		5 6 6 6			12	
7	**Silty SAND (SM)** Firm, brown, fine to coarse, trace gravel	6 7 7 5			14	
8.5	**Silty SAND (SM)** Very dense to firm, light brown and white, fine to coarse, little gravel and shell fragments, trace clay (weathered coral limestone)	50/5			>>	
10		7 7 8 7			15	
11.5	**Clayey SAND (SC)** Firm to very dense, light brown and white, fine to coarse, little gravel and shell fragments (weathered coral limestone)	8 12 14 18			26	
13		18 28 32 42			60	
15		12 50/3			>>	21.2
16		13 29 50/4			>>	
18		18 37 50/3			>>	
	Boring terminated at 18.07 meters.					

DATE DRILLED: **November 6, 2009** ▽ WATER DEPTH, m: **6.7** DRILL METHOD: **57 mm H.S.A.**

DRILLER: **Fishburne Drilling** ▶ CAVE IN DEPTH, m: **5.2** EQUIPMENT: **CME 45C w/ Auto Hammer**

LOG WITH MOISTURE LIMITS & SU PLOTS - METRIC 5290REV.GPJ GEOENVIRONMENTAL RESOURCES.GDT 1/15/10

LOG OF BORING NO. GB-39

FY11 & FY12 MCON Projects
Camp Lemonier, Djibouti
GER Project No. 110-5290

GER CONSULTING ENGINEERS

SURFACE ELEVATION, m: NORTH, m: 1276784 EAST, m: 299180 SHEET NO.: 1 OF 1

DEPTH, m	LITHOLOGY	SAMPLER	DESCRIPTION OF MATERIAL	SAMPLER BLOWS PER 150 mm	UNIT DRY WEIGHT, kN/m³	UNDRAINED SHEAR STRENGTH, kPa (0 100 200 300 400 500 600 700 800) / UNCORRECTED SPT N-VALUE, blows/0.3m (PL 20, MC 40, LL 60; 0 10 20 30 40 50 60 70 80)	PERCENT PASSING #200 SIEVE, %
0			**Clayey, Low Plasticity SILT (ML)** Very stiff to very hard, reddish brown to brown, trace to some sand	7 6 7 7 10 8 7 7 8 10 10 12 14 15 18 20 5 8 10 11 21 37 44 50/3		13 15 20 33 18 >> 81	
1							
2							
3							
4				13 15 17 18		32	
5							
6				4 5 5 7		10	
7			**Silty SAND (SM)** Firm to very dense, brown, fine to coarse, little gravel and shell fragments, trace clay (weathered coral limestone)	5 5 7 7		12	
8				8 50/4		>>	
9			Boring terminated at 8.78 meters.				
10							
11							
12							
13							
14							
15							
16							
17							
18							

DATE DRILLED: **November 6, 2009** WATER DEPTH, m: **6.7** DRILL METHOD: **57 mm H.S.A.**

DRILLER: **Fishburne Drilling** CAVE IN DEPTH, m: **5.2** EQUIPMENT: **CME 45C w/ Auto Hammer**

LOG WITH MOISTURE LIMITS & SU PLOTS - METRIC 5290REV.GPJ GEOENVIRONMENTAL RESOURCES.GDT 1/15/10

LOG OF BORING NO. GB-40

FY11 & FY12 MCON Projects
Camp Lemonier, Djibouti
GER Project No. 110-5290

GER CONSULTING ENGINEERS

SURFACE ELEVATION, m: NORTH, m: 1276691 EAST, m: 299191 SHEET NO.: 1 OF 1

DEPTH, m	LITHOLOGY	SAMPLER	DESCRIPTION OF MATERIAL	SAMPLER BLOWS PER 150 mm	UNIT DRY WEIGHT, kN/m³	UNDRAINED SHEAR STRENGTH, kPa (0 100 200 300 400 500 600 700 800) / UNCORRECTED SPT N-VALUE, blows/0.3m (0 10 20 30 40 50 60 70 80)	PERCENT PASSING #200 SIEVE, %
0			**Sandy, Low Plasticity CLAY (CL)** Stiff to very stiff, dark reddish brown with white flecks, some silt	4 5 5 5 7 7 5 8 7 7 7 10 7 10 11 13 5 9 16 20 8 8 9 10		10 12 14 21 25 17	
1							
2							
3							
4			**Silty SAND (SM)** Very dense to loose, brown, fine to coarse, trace gravel and clay	16 23 32 50/3		55	
5							
6				10 9 5 6		14	
7				4 4 5 5		9	
8							
9			**Silty SAND (SM)** Very dense, light brown, fine to coarse, little gravel and shell fragments, trace clay (weathered coral limestone)	22 42 36 21		78	
10			Boring terminated at 9.14 meters.				
11							
12							
13							
14							
15							
16							
17							
18							

DATE DRILLED: **November 6, 2009** WATER DEPTH, m: **6.7** DRILL METHOD: **57 mm H.S.A.**

DRILLER: **Fishburne Drilling** CAVE IN DEPTH, m: **4.6** EQUIPMENT: **CME 45C w/ Auto Hammer**

LOG WITH MOISTURE LIMITS & SU PLOTS - METRIC 5290REV.GPJ GEOENVIRONMENTAL RESOURCES.GDT 1/15/10

LOG OF BORING NO. GB-41

FY11 & FY12 MCON Projects
Camp Lemonier, Djibouti
GER Project No. 110-5290

GER CONSULTING ENGINEERS

SURFACE ELEVATION, m: NORTH, m: 1276600 EAST, m: 299161 SHEET NO.: 1 OF 1

DEPTH, m	LITHOLOGY	SAMPLER	DESCRIPTION OF MATERIAL	SAMPLER BLOWS PER 150 mm	UNIT DRY WEIGHT, kN/m³	UNDRAINED SHEAR STRENGTH, kPa (□) / UNCORRECTED SPT N-VALUE, blows/0.3m (△)	PERCENT PASSING #200 SIEVE, %
0			**Silty, Low Plasticity CLAY (CL)** Stiff to hard, dark reddish brown, trace to little sand	10 6 8 8 7		△ 14	
1				11 11 13 8 12		△ 22	
				15 21 14		△ 27	
2				18 24 28		△ 42	
			Silty SAND (SM) Firm to very dense, dark brown, fine to coarse	8 11 12 13 10		△ 23	
3				12 12 14		△ 24	
4				18 50/3		>>△	
5			**Clayey, Low Plasticity SILT (ML)** Very stiff, brown, trace to little sand	9 12 15 20		△ 27	
6							
7			**Clayey SAND (SC)** Firm to very dense, brown and white, fine to coarse, little gravel and shell fragments (weathered coral limestone)	8 11 15 21		△ 26	
8							
9				8 8 9 12		△ 17	
10				17 22 22 28		△ 44	
11							
12				21 19 22 25		△ 41	
13				25 50/3		>>△	
14							
15				12 13 17 19		△ 30	
16				9 13 17 15		△ 30	
17							
18				12 15 15 17		△ 30	
			Boring terminated at 18.29 meters.				

DATE DRILLED: **November 2, 2009** ▽ WATER DEPTH, m: **7.9** DRILL METHOD: **57 mm H.S.A.**

DRILLER: **Fishburne Drilling** ▶ CAVE IN DEPTH, m: **3** EQUIPMENT: **CME 45C w/ Auto Hammer**

LOG WITH MOISTURE LIMITS & SU PLOTS - METRIC 5290REV.GPJ GEOENVIRONMENTAL RESOURCES.GDT 1/15/10

LOG OF BORING NO. GB-42

FY11 & FY12 MCON Projects
Camp Lemonier, Djibouti
GER Project No. 110-5290

GER CONSULTING ENGINEERS

SURFACE ELEVATION, m: NORTH, m: 1276636 EAST, m: 299271 SHEET NO.: 1 OF 1

DEPTH, m	LITHOLOGY	SAMPLER	DESCRIPTION OF MATERIAL	SAMPLER BLOWS PER 150 mm	UNIT DRY WEIGHT, kN/m³	UNDRAINED SHEAR STRENGTH, kPa (0 100 200 300 400 500 600 700 800) / UNCORRECTED SPT N-VALUE, blows/0.3m (PL 20, MC 40, LL 60; 0 10 20 30 40 50 60 70 80)	PERCENT PASSING #200 SIEVE, %
0			**Sandy, Low Plasticity CLAY (CL)** Very stiff to hard, dark reddish brown with white flecks, some silt	9 8 8 8 10 12 14 16 16 18 21 27 22 24 25 27 4 7 19 26 50/5		16 26 39 49 26 >>	
3			**Clayey, Low Plasticity SILT (ML)** Very hard to stiff, brown, trace to little sand				
4				4 12 14 20		26	
5							
6				6 6 7 9		13	
7			**Silty SAND (SM)** Dense to firm, light brown, fine to coarse, little gravel and little shell fragments, trace clay (weathered coral limestone)	11 13 18 21		31	
8							
9				8 10 14 18		24	
			Boring terminated at 9.14 meters.				
10							
11							
12							
13							
14							
15							
16							
17							
18							

DATE DRILLED: **November 2, 2009** WATER DEPTH, m: **6.7** DRILL METHOD: **57 mm H.S.A.**

DRILLER: **Fishburne Drilling** CAVE IN DEPTH, m: **4.6** EQUIPMENT: **CME 45C w/ Auto Hammer**

LOG WITH MOISTURE LIMITS & SU PLOTS - METRIC 5290REV.GPJ GEOENVIRONMENTAL RESOURCES.GDT 1/15/10

LOG OF BORING NO. GB-47

FY11 & FY12 MCON Projects
Camp Lemonier, Djibouti
GER Project No. 110-5290

GER CONSULTING ENGINEERS

SURFACE ELEVATION, m: NORTH, m: 1276588 EAST, m: 299341 SHEET NO.: 1 OF 1

DEPTH, m	LITHOLOGY	SAMPLER	DESCRIPTION OF MATERIAL	SAMPLER BLOWS PER 150 mm	UNIT DRY WEIGHT, kN/m³	UNDRAINED SHEAR STRENGTH, kPa (□) / UNCORRECTED SPT N-VALUE, blows/0.3m (△)	PERCENT PASSING #200 SIEVE, %
0			**Silty SAND (SM)** Firm, brown, fine	12 11 11 11 10		△ 22	
1			**Sandy, Low Plasticity CLAY (CL)** Stiff to very hard, dark reddish brown, trace to some silt	12 11 13 6 10 10 11		△ 23	
2				3 3 6 9 4 5 11		△ 20; △ 9	
3				15 11 19 50/4		△ 16; >>△	
4			**Clayey, Low Plasticity SILT (ML)** Very stiff, brown, little sand	7 11 14 20		△ 25	
5							
6				6 7 9 11		△ 16	
7			**Silty SAND (SM)** Firm, brown, fine to coarse, little gravel and shell fragments (weathered coral limestone)	11 14 12 9		△ 26	
8							
9			**Clayey SAND (SC)** Firm to very dense, brown, tan and white, fine to coarse, trace to some gravel and shell fragments (weathered coral limestone)	5 7 30 29		△ 37	
10				4 8 25 25		△ 33	
11							
12				6 8 11 12		△ 19	
13				50/5		>>△	
14							
15				3 7 12 15		△ 19	
16				5 9 14 23		△ 23	
17							
18				6 9 13 19		△ 22	
			Boring terminated at 18.29 meters.				

Scale: 0 100 200 300 400 500 600 700 800 kPa; PL 20, MC 40, LL 60; 0 10 20 30 40 50 60 70 80

DATE DRILLED: **November 1, 2009** ▽ WATER DEPTH, m: **6.7** DRILL METHOD: **57 mm H.S.A.**

DRILLER: **Fishburne Drilling** ▶ CAVE IN DEPTH, m: **5.2** EQUIPMENT: **CME 45C w/ Auto Hammer**

LOG WITH MOISTURE LIMITS & SU PLOTS - METRIC 5290REV.GPJ GEOENVIRONMENTAL RESOURCES.GDT 1/15/10

LOG OF BORING NO. GB-48

FY11 & FY12 MCON Projects
Camp Lemonier, Djibouti
GER Project No. 110-5290

GER CONSULTING ENGINEERS

SURFACE ELEVATION, m: NORTH, m: 1276464 EAST, m: 299344 SHEET NO.: 1 OF 1

DEPTH, m	LITHOLOGY	SAMPLER	DESCRIPTION OF MATERIAL	SAMPLER BLOWS PER 150 mm	UNIT DRY WEIGHT, kN/m³	UNDRAINED SHEAR STRENGTH, kPa (0 100 200 300 400 500 600 700 800) / UNCORRECTED SPT N-VALUE, blows/0.3m (PL 20, MC 40, LL 60; 0 10 20 30 40 50 60 70 80)	PERCENT PASSING #200 SIEVE, %
0			**Silty, Low Plasticity CLAY (CL)** Stiff, dark reddish brown, some sand	8 7 6 6 7 6 7 7 8 5 10 11		13	
1						13	
						15	
2			**Clayey, Low Plasticity SILT (ML)** Very stiff to very hard, brown, little to some sand	8 9 12 13 8 13 23 41 13 20 25 39		21	
3						36	
						45	
4				21 50/4		>>	
5							
6				4 13 17 21		30	
7				6 11 17 23		28	
8			**Clayey SAND (SC)** Firm to very dense, brown and white, fine to coarse, little gravel and shell fragments (weathered coral limestone)	21 18 21 13		39	
9							
10				4 7 8 8		15	
11							
12				4 5 7 8		12	
13				14 50/4		>>	
14			**Silty SAND (SM)** Firm to very dense, light brown, fine to coarse, little gravel and shell fragments, trace clay (weathered coral limestone)				
15				4 8 10 11		18	
16				14 15 18 21		33	
17							
18				14 18 50/4		>>	
			Boring terminated at 18.07 meters.				

DATE DRILLED: **November 2, 2009** WATER DEPTH, m: **7.9** DRILL METHOD: **57 mm H.S.A.**

DRILLER: **Fishburne Drilling** CAVE IN DEPTH, m: **4.3** EQUIPMENT: **CME 45C w/ Auto Hammer**

LOG WITH MOISTURE LIMITS & SU PLOTS - METRIC 5290REV.GPJ GEOENVIRONMENTAL RESOURCES.GDT 1/15/10

LOG OF BORING NO. GB-58

FY11 & FY12 MCON Projects
Camp Lemonier, Djibouti
GER Project No. 110-5290

GER CONSULTING ENGINEERS

SURFACE ELEVATION, m: NORTH, m: 1276464 EAST, m: 299612 SHEET NO.: 1 OF 1

DEPTH, m	DESCRIPTION OF MATERIAL	SAMPLER BLOWS PER 150 mm	UNIT DRY WEIGHT, kN/m³	PERCENT PASSING #200 SIEVE, %
0	**Sandy, Low Plasticity CLAY (CL)** Very stiff to stiff, light brown to brown, trace gravel (fill)	12 9 8 7 6 6 7 7		
1	**Sandy, Low Plasticity CLAY (CL)** Stiff, dark brown, some silt, trace salt crystals	5 5 6 7 4 5 7 8		
2	**Sandy SILT (ML)** Hard to very hard, brown to light brown, trace gravel and shell fragments	8 14 18 20 15 24 36 50/5		
3				
4		11 24 35 40		
5	**Very Silty CLAY (CL-ML)** Very stiff, brown, some fine sand	7 10 13 18		
6				
7	**Silty SAND (SM)** Firm to very dense, brown to light tan and white, fine to coarse, trace to some clay and cemented shell and gravel (weathered coral limestone)	9 10 11 10		
8				
9		15 20 29 50/5		
10		14 24 35 50		
11				
12		11 23 30 25		23.6
13		8 50/3		
14				
15		8 15 22 32		
16		6 8 7 15		
17				
18		4 11 27 37		
	Boring terminated at 18.29 meters.			

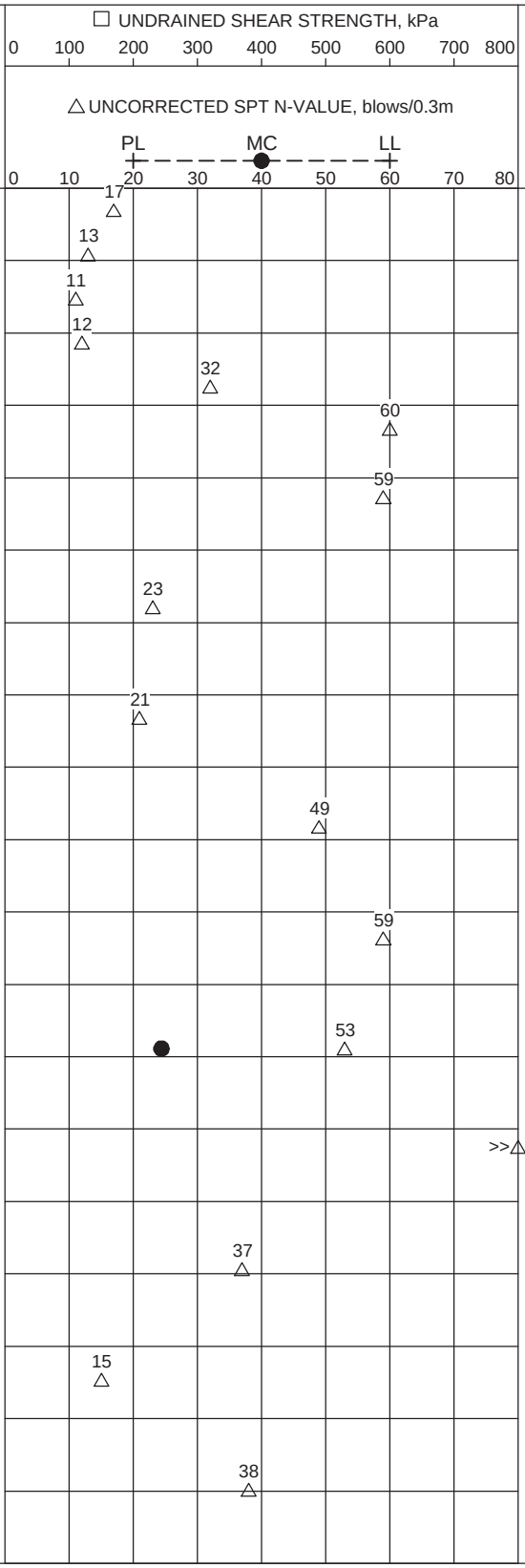

DATE DRILLED: **October 29, 2009** WATER DEPTH, m: **5.5** DRILL METHOD: **57 mm H.S.A.**

DRILLER: **Fishburne Drilling** CAVE IN DEPTH, m: **6.4** EQUIPMENT: **CME 45C w/ Auto Hammer**

LOG WITH MOISTURE LIMITS & SU PLOTS - METRIC 5290REV.GPJ GEOENVIRONMENTAL RESOURCES.GDT 1/15/10

BORING LOG LEGEND

KEY TO DRILLING SYMBOLS

Split Spoon Sample (ASTM D 1586)		Water Table at Time of Drilling		**H.S.A.**	Hollow Stem Auger Drilling
Undisturbed Sample (ASTM D 1587)		Water Table after 24 hrs.		**M.R.**	Mud Rotary Wash Drilling
Rock Coring (ASTM D 2113)		Boring Cave In		**PP**	Pocket Penetrometer (tsf)
		Loss of Drilling Fluid		**REC**	Core Recovery (%)
		Auger Refusal		**RQD**	Rock Quality Designator (%)
Roller Cone Advanced		Roller Cone Refusal		**SCR**	Solid Core Recovery (%)
Seepage into Borehole		Approximate Strata Change Depth Different Soil Types			Approximate Strata Change Depth Similar Soil Types

CORRELATION OF RELATIVE DENSITY AND CONSISTENCY WITH STANDARD PENETRATION TEST RESISTANCE (ASTM D 1586)[§]

SPT RESISTANCE (N) IN BLOWS PER FOOT

SPT N	RELATIVE DENSITY[†] SAND & GRAVEL	SPT N	CONSISTENCY[†] SILT & CLAY
0 - 4	Very Loose	0 - 2	Very Soft
5 - 10	Loose	3 - 4	Soft
11 - 30	Firm	5 - 8	Firm
31 - 50	Dense	9 - 15	Stiff
51 +	Very Dense	16 - 30	Very Stiff
		31 - 50	Hard
		51 +	Very Hard

ROCK QUALITY[‡]

FRACTURES, JOINT SPACING AND BEDDING

RQD (%)	DIAGNOSTIC DESCRIPTION	ROCK PARAMETER FIELD/LAB RATIO	SPACING	JOINTS	BEDDING
0 - 25	Very Poor	0.15	Less than 2"	Very Close	Very Thin
25 - 50	Poor	0.20	2" to 1'	Close	Thin
50 - 75	Fair	0.25	1' to 3'	Moderately Close	Medium
75 - 90	Good	0.30 to 0.70	3' to 10'	Wide	Thick
90 - 100	Excellent	0.70 to 1.00	More than 10'	Very Wide	Very Thick

HARDNESS

Very Hard - Breaking specimens requires several hard hammer blows

Hard - Hard hammer blow required to detach specimens

Moderately Hard - Light hammer blow required to detach specimens

Medium - May be scratched 1/16" deep by a knife or nail, breaks into several pieces by light hammer blow

Soft - Can be gouged readily by knife or nail, corners and edges broken by finger pressure

Very Soft - May be carved with a knife and readily broken by finger pressure

WEATHERING

Fresh - Fresh rock, bright crystals, no staining

Slight - Minimum stainaing and discoloration, open joints contain clay

Moderate - Significant portions of rock shows staining and discoloration, strong rock fragments

Severe - All rock shows staining, rock fabric evident but reduced strength

Very Severe - All rock shows staining, rock mass effectively reduced to soil with strong rock fragments remaining

Complete - Rock reduced to soil with rock fabric not discernable

[§] *Resistance of a standard 2-inch O.D., 1.375-inch I.D. split spoon sampler driven by a 140 pound hammer free-falling 30 inches.*

[†] *after Terzaghi and Peck, 1968*

[‡] *after D. U. Deere, 1963, 1967*

GER

SOIL CLASSIFICATION CHART (ASTM D 2487)

MAJOR DIVISIONS			SYMBOLS GRAPH	SYMBOLS LETTER	TYPICAL DESCRIPTIONS
COARSE GRAINED SOILS MORE THAN 50% OF MATERIAL IS LARGER THAN NO. 200 SIEVE SIZE	GRAVEL AND GRAVELLY SOILS MORE THAN 50% OF COARSE FRACTION RETAINED ON NO. 4 SIEVE	CLEAN GRAVELS (LITTLE OR NO FINES)		GW	WELL-GRADED GRAVELS, GRAVEL - SAND MIXTURES, LITTLE OR NO FINES
				GP	POORLY-GRADED GRAVELS, GRAVEL - SAND MIXTURES, LITTLE OR NO FINES
		GRAVELS WITH FINES (APPRECIABLE AMOUNT OF FINES)		GM	SILTY GRAVELS, GRAVEL - SAND - SILT MIXTURES
				GC	CLAYEY GRAVELS, GRAVEL - SAND - CLAY MIXTURES
	SAND AND SANDY SOILS MORE THAN 50% OF COARSE FRACTION PASSING ON NO. 4 SIEVE	CLEAN SANDS (LITTLE OR NO FINES)		SW	WELL-GRADED SANDS, GRAVELLY SANDS, LITTLE OR NO FINES
				SP	POORLY-GRADED SANDS, GRAVELLY SAND, LITTLE OR NO FINES
		SANDS WITH FINES (APPRECIABLE AMOUNT OF FINES)		SM	SILTY SANDS, SAND - SILT MIXTURES
				SC	CLAYEY SANDS, SAND - CLAY MIXTURES
FINE GRAINED SOILS MORE THAN 50% OF MATERIAL IS SMALLER THAN NO. 200 SIEVE SIZE	SILTS AND CLAYS	LOW PLASTICITY LIQUID LIMIT LESS THAN 50		ML	INORGANIC SILTS, CLAYEY SILTS, SILT-VERY FINE SAND MIXTURES, ROCK FLOUR
				CL	INORGANIC CLAYS OF LOW TO MEDIUM PLASTICITY, GRAVELLY, SANDY, SILTY, & LEAN CLAYS
				OL	ORGANIC SILTS AND ORGANIC CLAYS OF LOW PLASTICITY
		HIGH PLASTICITY LIQUID LIMIT GREATER THAN 50		MH	INORGANIC SILTS AND MICACEOUS, DIATOMACEOUS AND ELASTIC SILTY SOILS
				CH	INORGANIC CLAYS OF HIGH PLASTICITY, FAT CLAYS
				OH	ORGANIC CLAYS OF MEDIUM TO HIGH PLASTICITY, ORGANIC SILTS
OTHER SOILS	HIGHLY ORGANIC SOILS			PT	PEAT, HUMUS, MUCK, SWAMP SOILS WITH VERY HIGH ORGANIC CONTENTS
	UNCONTROLLED FILLS				DISTURBED SOILS WITH POSSIBLE DEBRIS AND RUBBLE, OLD CONSTRUCTION WASTES, NON-ENGINEERED BACKFILLS
	DECOMPOSED OR PARTIALLY WEATHERED ROCK				TRANSITIONAL MATERIAL BETWEEN SOIL AND ROCK WHICH MAY RETAIN THE RELICT STRUCTURE OF THE PARENT ROCK

Atterberg Limits

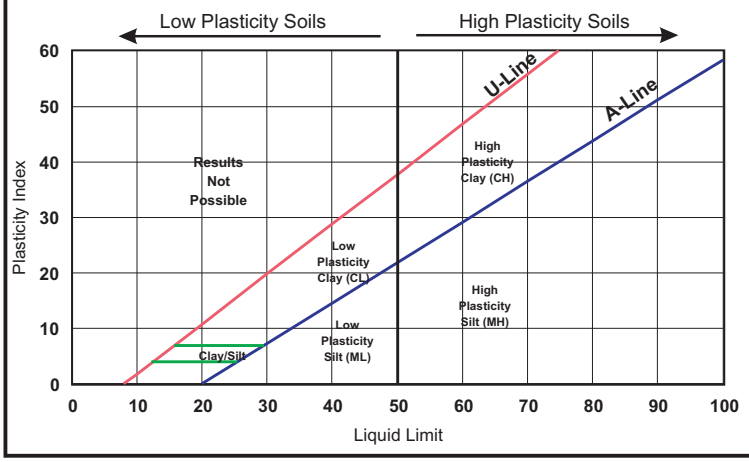

PARTICLE SIZE IDENTIFICATION

BOULDERS:		Greater than 300 mm (12 in.)
COBBLES:		75 mm to 300 mm (3 - 12 in.)
GRAVEL:	Coarse -	19.0 mm to 75 mm (0.75 - 3 in.)
	Fine -	4.75 mm to 19.0 mm (#4 - 0.75 in.)
SANDS:	Coarse -	2.00 mm to 4.75 mm
	Medium -	0.425 mm to 2.00 mm
	Fine -	0.075 mm to 0.425 mm
SILTS & CLAYS:		Less than 0.075 mm

PLASTICITY INDEX (PI) & SHRINK-SWELL POTENTIAL

0 - 4	None
4 - 15	Slight or Low
15 - 30	Medium to High
31+	High to Very High

ADDITIONAL RELATIVE DESCRIPTIVE VALUES

Trace < 10%	Some < 35% but > 20%
Little < 20% but > 10%	And > 35%

GER

APPENDIX IV

GER Laboratory Test Results

LABORATORY TEST RESULTS SUMMARY

Project: FY11 & FY12 MCON Projects
Camp Lemonier, Djibouti

Number: 110-5290

Date: 12/31/09

BORING NUMBER	SAMPLE DEPTH (meters)	SAMPLE TYPE	USCS CLASS.	NATURAL MOISTURE CONTENT (%)	% FINES	LL	PL	PI	NATURAL DENSITY (KN/m³)	CHLORIDES (mg/Kg)	SULFATES (mg/Kg)	pH	OTHER TESTS
GB-34	8.8	SS	SC-SM	27.3	40.1	-	-	-	-	-	-	-	-
GB-35	5.8	SS	ML	19.6	-	30	30	0	-	-	-	-	-
GB-35	18.0	SS	SC	32.0	32.2	-	-	-	-	-	-	-	-
GB-36	14.9	SS	SC	17.9	21.2	-	-	-	-	-	-	-	SIEVE
GB-38	0.9	SS	CL	8.4	-	46	22	24	-	-	-	-	-
GB-38	8.8	SS	SC	24.0	44.4	-	-	-	-	-	-	-	-
GB-39	1.5	SS	ML	24.4	-	40	30	10	-	-	-	-	-
GB-41	0.9	SS	CL	-	-	-	-	-	-	2619	1834	9.1	-
GB-45	0.9	SS	CL	3.5	-	-	-	-	20.20	-	-	-	UC
GB-45	5.8	SS	ML	30.1	-	32	32	0	-	-	-	-	-
GB-49	1.5	SS	ML	7.0	56.1	20	20	0	-	-	-		-
GB-51	0.3	SS	CL	20.1	-	40	24	16	-	-	-	-	-
GB-51	2.1	SS	CL	16.8	-	40	20	20	-	-	-	-	-
GB-52	0.9	SS	CL	15.0	-	44	23	21	-	-	-	-	-
GB-53	3.3	SS	ML	9.4	-	27	24	3	-	-	-	-	-
GB-55	2.1	SS	CL	19.2	-	-	-	-	19.73	-	-	-	UC
GB-56	1.5	SS	CL	16.8	-	49	25	24	-	-	-	-	-

Tests performed in accordance with applicable ASTM Standards.

GER

LABORATORY TEST RESULTS SUMMARY

Project: FY11 & FY12 MCON Projects
Camp Lemonier, Djibouti

Number: 110-5290

Date: 12/31/09

BORING NUMBER	SAMPLE DEPTH (meters)	SAMPLE TYPE	USCS CLASS.	NATURAL MOISTURE CONTENT (%)	% FINES	LL	PL	PI	NATURAL DENSITY (KN/m³)	CHLORIDES (mg/Kg)	SULFATES (mg/Kg)	pH	OTHER TESTS
GB-57	0.9	SS	CL	4.7	-	-	-	-	18.76	-	-	-	UC
GB-57	2.7	SS	SC	10.3	36.0	-	-	-	-	-	-	-	SIEVE
GB-58	11.9	SS	SM	24.4	23.6	-	-	-	-	-	-	-	SIEVE
GB-60	0.9	SS	CL	22.7	-	44	25	19	-	-	-	8.4	-
GB-62	1.5	SS	CL	10.5	-	-	-	-	20.09	-	-	-	UC
GB-63	0.9	SS	CL	8.2	-	-	-	-	20.10	-	-	-	UC
GB-64	0.9	SS	CL	9.6	-	33	16	17	-	-	-	-	-
GB-65	0.3	SS	CL	9.7	-	-	-	-	19.38	-	-	-	UC
GB-65	2.1	SS	CL	15.4	-	32	22	10	-	-	-	-	-
GB-65	7.3	SS	SM	23.6	18.8	-	-	-	-	-	-	-	-
GB-66	5.8	SS	ML	27.8	-	38	32	6	-	-	-	-	-
GB-67	2.7	SS	CL	18.9	52.4	-	-	-	-	-	-	-	-
GB-67	4.3	SS	ML	28.7	-	-	-	-	18.46	-	-	-	UC
GB-67	11.9	SS	SC	23.0	36.7	-	-	-	-	-	-	-	-
GB-68	1.5	SS	CL	10.9	-	-	-	-	20.84	-	-	-	UC
GB-68	2.7	SS	CL	16.3	50.4	-	-	-	-	-	-	-	-
GB-68	7.3	SS	SM	13.8	19.4	-	-	-	-	-	-	-	SIEVE

Tests performed in accordance with applicable ASTM Standards.

GER

Estimated Corrosion Potential

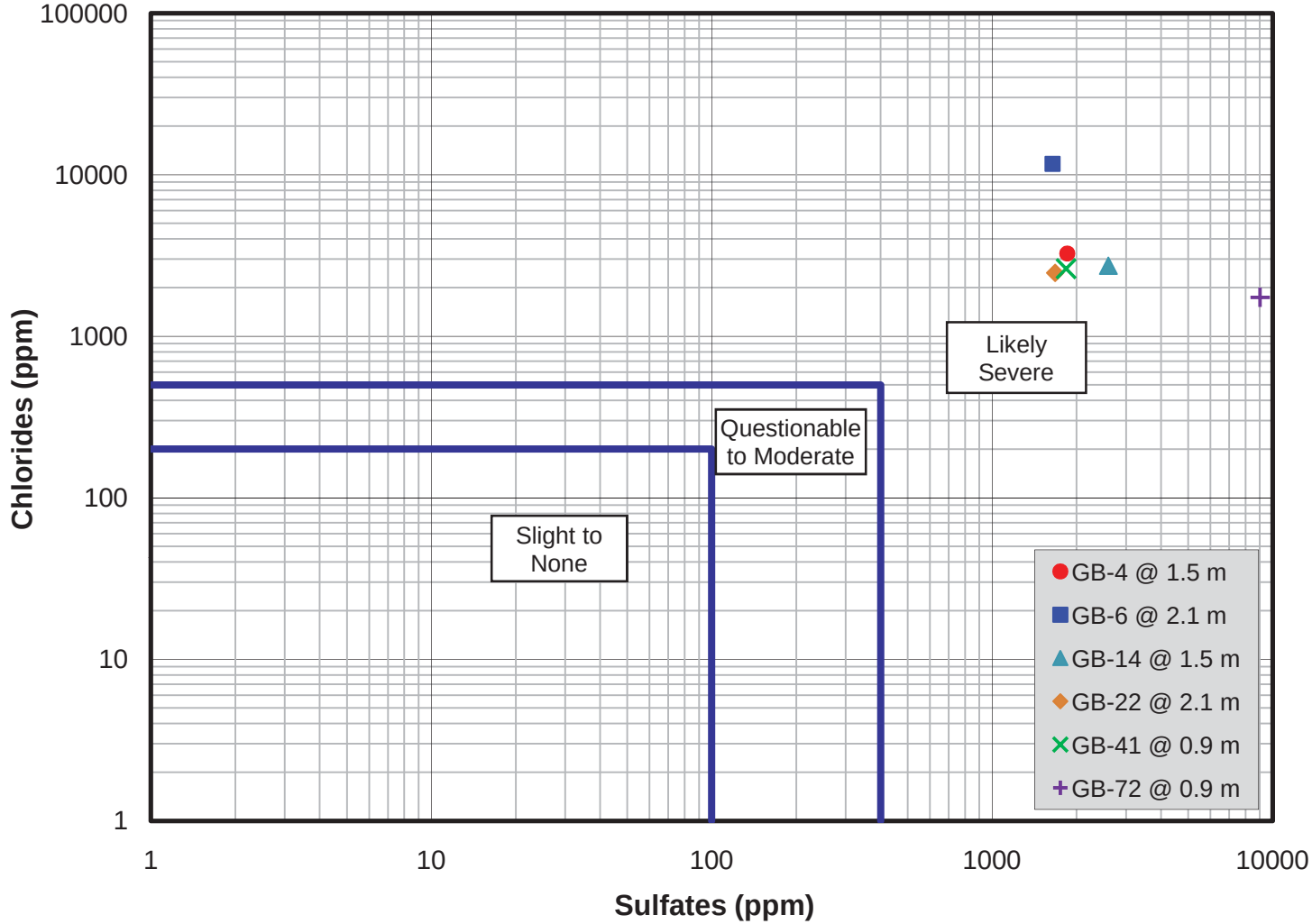

FY11 FY12 MCON Projects
Camp Lemonier, Djibouti
110-5290

GER

APPENDIX V

PCASE Pavement Design Reports

Pavement Design Report
U.S. Army Corps of Engineers
PCASE Version 2.09.01
Date : 6/6/2014

Design Name :	Heavy Duty
Design Type :	Roads
Pavement Type :	Flexible
Road Type :	Street
Terrain Type :	Flat
Analysis Type :	CBR
Depth of Frost (mm) :	0
Wander Width (cm) :	847.1

Layer Information

Layer Type	Material Type	Frost Code	Analysis	Non frost Design Thickness (mm)	Reduced Subgrade Strength (mm)	Limited Subgrade Penetration (mm)	CBR Strength
Asphalt	Asphalt	NFS	Compute	102	0	0	0
Base	Unbound Crushed Stone	NFS	Manual	152	0	0	80
Natural Subgrade	Cohesive Cut	NFS	Manual	0	0	0	15

Traffic Information

Pattern Name : R-11 REFUELER

Vehicles	Weight (kg)	Passes per Life Span
R-11 REFUELER	30936	175200

Equivalent Single Axle Loads 7.46E+13

Pavement Thickness Report
U.S. Army Corps of Engineers

Design Name :	Heavy Duty
Design Type :	Roads
Pavement Type :	Rigid
Road Type :	Street
Terrain Type :	Flat
Analysis Type :	K
Depth of Frost (mm) :	0
Wander Width (cm) :	847.1
% Load Transfer :	25
Effective K (kPa/mm) :	35.29
uced Sub Effective K (kPa/mm) :	0
Joint Spacing :	14 m
Dowel Spacing :	305 mm
Dowel Length :	406 mm
Dowel Diameter:	20 mm

Layer Information

Layer Type	Material Type	Frost Code	Flexural Strength (MPa)	% Steel	Analysis	Non frost Design Thickness (mm)	Reduced Subgrade Strength (mm)	Limited Subgrade Penetration (mm)	K Strength (kPa/m m)
PCC	N/A	NFS	4.48	0.1	Compute	152	0	0	0
Base	Unbound Crushed Stone	NFS	0	0	Manual	102	0	0	0
Natural Subgrade	Cohesive Cut	NFS	0	0	Manual	0	0	0	32

Traffic Information

Pattern Name : R-11 REFUELER

Vehicles	Weight (kg)	Passes per Life Span
R-11 REFUELER	30936	175200

Equivalent Single Axle Loads 34440322

Pavement Design Report
U.S. Army Corps of Engineers
PCASE Version 2.09.01
Date : 6/12/2014

Design Name :	Light Duty
Design Type :	Roads
Pavement Type :	Flexible
Road Type :	Street
Terrain Type :	Flat
Analysis Type :	CBR
Depth of Frost (mm) :	0
Wander Width (cm) :	847.1

Layer Information

Layer Type	Material Type	Frost Code	Analysis	Non frost Design Thickness (mm)	Reduced Subgrade Strength (mm)	Limited Subgrade Penetration (mm)	CBR Strength
Asphalt	Asphalt	NFS	Compute	51	0	0	0
Base	Unbound Crushed Stone	NFS	Compute	102	0	0	80
Natural Subgrade	Cohesive Cut	NFS	Manual	0	0	0	15

Traffic Information

Pattern Name : SUV

Vehicles	Weight (kg)	Passes per Life Span
TRUCK, LARGE PICKUP OR SUV	3402	292000

Equivalent Single Axle Loads 329

SINCE

F&R

1881

HQ: 3015 DUMBARTON ROAD RICHMOND, VIRGINIA 23228 T 804.264.2701 F 804.264.1202 www.fandr.com

VIRGINIA • NORTH CAROLINA • SOUTH CAROLINA • MARYLAND • DISTRICT OF COLUMBIA

THIS PAGE HAS BEEN INTENTIONALLY LEFT BLANK

SECTION 05 12 00

STRUCTURAL STEEL
05/14

PART 1 GENERAL

1.1 REFERENCES

The publications listed below form a part of this specification to the extent referenced. The publications are referred to within the text by the basic designation only.

AMERICAN INSTITUTE OF STEEL CONSTRUCTION (AISC)

AISC 325	(2011) Steel Construction Manual
AISC 341	(2010) Seismic Provisions for Structural Steel Buildings
AISC 360	(2010) Specification for Structural Steel Buildings
AISC DESIGN GUIDE 10	(1997) Erection Bracing of Low-Rise Structural Steel Buildings

AMERICAN WELDING SOCIETY (AWS)

AWS A2.4	(2012) Standard Symbols for Welding, Brazing and Nondestructive Examination
AWS D1.1/D1.1M	(2010; Errata 2011) Structural Welding Code - Steel
AWS D1.8/D1.8M	(2009) Structural Welding Code—Seismic Supplement

ASTM INTERNATIONAL (ASTM)

ASTM A123/A123M	(2013) Standard Specification for Zinc (Hot-Dip Galvanized) Coatings on Iron and Steel Products
ASTM A143/A143M	(2007; R 2014) Standard Practice for Safeguarding Against Embrittlement of Hot-Dip Galvanized Structural Steel Products and Procedure for Detecting Embrittlement
ASTM A29/A29M	(2013) Standard Specification for General Requirements for Steel Bars, Carbon and Alloy, Hot-Wrought
ASTM A307	(2014) Standard Specification for Carbon Steel Bolts and Studs, 60 000 PSI Tensile Strength
ASTM A325M	(2014) Standard Specification for

	Structural Bolts, Steel, Heat Treated, 830 MPa Minimum Tensile Strength (Metric)
ASTM A36/A36M	(2014) Standard Specification for Carbon Structural Steel
ASTM A500/A500M	(2013) Standard Specification for Cold-Formed Welded and Seamless Carbon Steel Structural Tubing in Rounds and Shapes
ASTM A53/A53M	(2012) Standard Specification for Pipe, Steel, Black and Hot-Dipped, Zinc-Coated, Welded and Seamless
ASTM A563	(2007a; R2014) Standard Specification for Carbon and Alloy Steel Nuts
ASTM A563M	(2007; R 2013) Standard Specification for Carbon and Alloy Steel Nuts (Metric)
ASTM A780/A780M	(2009) Standard Practice for Repair of Damaged and Uncoated Areas of Hot-Dip Galvanized Coatings
ASTM A992/A992M	(2011) Standard Specification for Structural Steel Shapes
ASTM C1107/C1107M	(2014) Standard Specification for Packaged Dry, Hydraulic-Cement Grout (Nonshrink)
ASTM C827/C827M	(2010) Change in Height at Early Ages of Cylindrical Specimens from Cementitious Mixtures
ASTM F1554	(2007a; E 2011) Standard Specification for Anchor Bolts, Steel, 36, 55, and 105-ksi Yield Strength
ASTM F2329	(2013) Zinc Coating, Hot-Dip, Requirements for Application to Carbon and Alloy Steel Bolts, Screws, Washers, Nuts, and Special Threaded Fasteners
ASTM F436M	(2011) Hardened Steel Washers (Metric)
ASTM F844	(2007a; R 2013) Washers, Steel, Plain (Flat), Unhardened for General Use

U.S. DEPARTMENT OF DEFENSE (DOD)

UFC 3-301-01	(2013; Change 1) Structural Engineering
UFC 3-310-04	(2013) Seismic Design for Buildings

1.2 SUBMITTALS

Government approval is required for submittals with a "G" designation; submittals not having a "G" designation are for Contractor Quality Control

approval. Submittals with an "S" are for inclusion in the Sustainability Notebook, in conformance to Section 01 33 29 SUSTAINABILITY REPORTING. Submit the following in accordance with Section 01 33 00 SUBMITTAL PROCEDURES:

SD-01 Preconstruction Submittals

SD-02 Shop Drawings

Fabrication drawings including description of connections; G

SD-03 Product Data

Welding electrodes and rods

Non-Shrink Grout; G

SD-06 Test Reports

Bolts, nuts, and washers

Bolt Testing Reports

Embrittlement Test Reports

SD-07 Certificates

Steel

Bolts, nuts, and washers

Galvanizing

Welding procedures and qualifications

Welding electrodes and rods

1.3 QUALITY ASSURANCE

1.3.1 Preconstruction Submittals

1.3.2 Fabrication Drawing Requirements

Submit fabrication drawings for approval prior to fabrication. Fabrication drawings must not be reproductions of contract drawings. Include complete information for the fabrication and erection of the structure's components, including the location, type, and size of bolts, welds, member sizes and lengths, connection details, blocks, copes, and cuts. Use AWS A2.4 standard welding symbols. Shoring and temporary bracing must be designed and sealed by a registered professional engineer and submitted for record purposes, with calculations, as part of the drawings. Any deviations from the details shown on the contract drawings must be clearly highlighted on the fabrication drawings. Explain the reasons for any deviations from the contract drawings.

1.3.3 Certifications

1.3.3.1 Welding Procedures and Qualifications

Prior to welding, submit certification for each welder stating the type of welding and positions qualified for, the code and procedure qualified under, date qualified, and the firm and individual certifying the qualification tests.

Conform to all requirements specified in AWS D1.1/D1.1M.

PART 2 PRODUCTS

2.1 SYSTEM DESCRIPTION

Provide the structural steel system, including galvanizing, complete and ready for use. Structural steel systems including design, materials, installation, workmanship, fabrication, assembly, erection, inspection, quality control, and testing must be provided in accordance with AISC 360, AISC 341, UFC 3-301-01 and UFC 3-310-04 except as modified in this contract.

2.2 STEEL

2.2.1 Structural Steel

Wide flange, ASTM A992/A992M. Angles, Channels and Plates, ASTM A36/A36M.

2.2.2 Structural Steel Tubing

ASTM A500/A500M, Grade C.

2.2.3 Steel Pipe

ASTM A53/A53M, Type E or S, Grade B, weight class STD (Standard), unless noted otherwise.

2.3 BOLTS, NUTS, AND WASHERS

Submit the certified manufacturer's mill reports which clearly show the applicable ASTM mechanical and chemical requirements together with the actual test results for the supplied fasteners.

2.3.1 Common Grade Bolts

2.3.1.1 Bolts

ASTM A307, Grade A. The bolt heads and the nuts of the supplied fasteners must be marked with the manufacturer's identification mark, the strength grade and type specified by ASTM specifications.

2.3.1.2 Nuts

ASTM A563M, Grade A, heavy hex style.

2.3.1.3 Washers

ASTM F844.

2.3.2 High-Strength Bolts

2.3.2.1 Bolts

ASTM A325M, Type 1.

2.3.2.2 Nuts

ASTM A563M, Grade and Style as specified in the applicable ASTM bolt standard.

2.3.2.3 Washers

ASTM F436M, plain carbon steel.

2.3.3 Foundation Anchorage

2.3.3.1 Anchor Rods

ASTM F1554 Gr 36, Class 1A.

2.3.3.2 Anchor Nuts

ASTM A563, Grade A, hex style.

2.3.3.3 Anchor Washers

ASTM F844.

2.3.3.4 Anchor Plate Washers

ASTM A36/A36M.

2.4 STRUCTURAL STEEL ACCESSORIES

2.4.1 Welding Electrodes and Rods

AWS D1.1/D1.1M and AWS D1.8/D1.8M.

2.4.2 Non-Shrink Grout

ASTM C1107/C1107M, with no ASTM C827/C827M shrinkage. Grout must be nonmetallic.

2.4.3 Welded Shear Stud Connectors

ASTM A29/A29M, Type B. AWS D1.1/D1.1M.

2.5 GALVANIZING

ASTM F2329 for threaded parts or ASTM A123/A123M for structural steel members, as applicable, unless specified otherwise galvanize after fabrication where practicable.

2.6 FABRICATION

Fabrication must be in accordance with the applicable provisions of AISC 325. Fabrication and assembly must be done in the shop to the greatest extent possible. Punch, subpunch and ream, or drill bolt holes

perpendicular to the surface of the member.

Shop splices of members between field splices will be permitted only where indicated on the Contract Drawings. Splices not indicated require the approval of the Contracting Officer.

2.6.1 Markings

Prior to erection, members must be identified by a painted erection mark. Connecting parts assembled in the shop for reaming holes in field connections must be match marked with scratch and notch marks. Do not locate erection markings on areas to be welded. Do not locate match markings in areas that will decrease member strength or cause stress concentrations. Affix embossed tags to hot-dipped galvanized members.

2.7 DRAINAGE HOLES

Adequate drainage holes must be drilled to eliminate water traps. Hole diameter must be 13 mm and location must be indicated on the detail drawings. Hole size and location must not affect the structural integrity.

PART 3 EXECUTION

3.1 ERECTION

a. Erection of structural steel, except as indicated in item b. below, must be in accordance with the applicable provisions of AISC 325.

b. For low-rise structural steel buildings (18 m tall or less and a maximum of 2 stories), the structure must be erected in accordance with AISC DESIGN GUIDE 10.

After final positioning of steel members, provide full bearing under base plates and bearing plates using nonshrink grout. Place nonshrink grout in accordance with the manufacturer's instructions.

3.1.1 STORAGE

Material must be stored out of contact with the ground in such manner and location as will minimize deterioration.

3.2 CONNECTIONS

Except as modified in this section, connections not detailed must be designed in accordance with AISC 360. Build connections into existing work. Do not tighten anchor bolts set in concrete with impact torque wrenches. Holes must not be cut or enlarged by burning. Bolts, nuts, and washers must be clean of dirt and rust, and lubricated immediately prior to installation.

3.2.1 Common Grade Bolts

ASTM A307 bolts must be tightened to a "snug tight" fit. "Snug tight" is the tightness that exists when plies in a joint are in firm contact. If firm contact of joint plies cannot be obtained with a few impacts of an impact wrench, or the full effort of a man using a spud wrench, contact the Contracting Officer for further instructions.

3.2.2 High-Strength Bolts

Bolts must be installed in connection holes and brought to a snug tight fit.

3.3 GAS CUTTING

Use of gas-cutting torch in the field for correcting fabrication errors will not be permitted on any major member in the structural framing. Use of a gas cutting torch will be permitted on minor members not under stress only after approval has been obtained from the Contracting Officer.

3.4 WELDING

Welding must be in accordance with AWS D1.1/D1.1M and AWS D1.8/D1.8M. Provide AWS D1.1/D1.1M qualified welders, welding operators, and tackers.

Develop and submit the Welding Procedure Specifications (WPS) for all welding, including welding done using prequalified procedures. Prequalified procedures may be submitted for information only; however, procedures that are not prequalified must be submitted for approval.

3.4.1 Removal of Temporary Welds, Run-Off Plates, and Backing Strips

Remove only from finished areas. Remove backing strips from bottom flange of moment connections, backgouge the root pass to sound weld metal and reinforce with a 8 mm fillet weld minimum.

3.5 GALVANIZING REPAIR

Repair damage to galvanized coatings using ASTM A780/A780M zinc rich paint for galvanizing damaged by handling, transporting, cutting, welding, or bolting. Do not heat surfaces to which repair paint has been applied.

3.6 FIELD QUALITY CONTROL

Perform field tests, and provide labor, equipment, and incidentals required for testing. The Contracting Officer must be notified in writing of defective welds, bolts, nuts, and washers within 7 working days of the date of the inspection.

3.6.1 Welds

3.6.1.1 Visual Inspection

AWS D1.1/D1.1M. Furnish the services of AWS-certified welding inspectors for fabrication and erection inspection and testing and verification inspections.

Inspect proper preparation, size, gaging location, and acceptability of welds; identification marking; operation and current characteristics of welding sets in use.

3.6.2 High-Strength Bolts

3.6.2.1 Testing Bolt, Nut, and Washer Assemblies

Test a minimum of 3 bolt, nut, and washer assemblies from each mill certificate batch in a tension measuring device at the job site prior to the beginning of bolting start-up. Demonstrate that the bolts and nuts,

when used together, can develop tension not less than the provisions specified in AISC 360, depending on bolt size and grade. The bolt tension must be developed by tightening the nut. A representative of the manufacturer or supplier must be present to ensure that the fasteners are properly used, and to demonstrate that the fastener assemblies supplied satisfy the specified requirements. Submit bolt testing reports. This test may not be required as directed by the Contracting Officer.

3.6.2.2 Testing

The Government has the option to perform nondestructive tests on 5 percent of the installed bolts to verify compliance with pre-load bolt tension requirements. Provide the required access for the Government to perform the tests. The nondestructive testing will be done in-place using an ultrasonic measuring device or any other device capable of determining in-place pre-load bolt tension. The test locations must be selected by the Contracting Officer. If more than 10 percent of the bolts tested contain defects identified by testing, then all bolts used from the batch from which the tested bolts were taken, must be tested at the Contractor's expense. Retest new bolts after installation at the Contractor's expense.

3.6.3 Testing for Embrittlement

ASTM A143/A143M for steel products hot-dip galvanized after fabrication. Submit embrittlement test reports.

-- End of Section --

SECTION 05 21 00

STEEL JOIST FRAMING
05/15

PART 1 GENERAL

1.1 REFERENCES

The publications listed below form a part of this specification to the extent referenced. The publications are referred to within the text by the basic designation only.

AMERICAN WELDING SOCIETY (AWS)

AWS D1.1/D1.1M	(2010; Errata 2011) Structural Welding Code - Steel

ASTM INTERNATIONAL (ASTM)

ASTM A36/A36M	(2014) Standard Specification for Carbon Structural Steel

SOCIETY FOR PROTECTIVE COATINGS (SSPC)

SSPC PA 1	(2000; E 2004) Shop, Field, and Maintenance Painting of Steel
SSPC Paint 15	(1999; E 2004) Steel Joist Shop Primer
SSPC SP 2	(1982; E 2000; E 2004) Hand Tool Cleaning

STEEL JOIST INSTITUTE (SJI)

SJI LOAD TABLES	(2005; Errata 1 2006; Errata 2 2007; Errata 3 2007) 42nd Edition Catalog of Standard Specifications Load Tables and Weight Tables for Steel Joists and Joist Girders

U.S. NATIONAL ARCHIVES AND RECORDS ADMINISTRATION (NARA)

29 CFR 1926	Safety and Health Regulations for Construction

1.2 SUBMITTALS

Government approval is required for submittals with a "G" designation; submittals not having a "G" designation are for Contractor Quality Control approval. Submittals with an "S" are for inclusion in the Sustainability Notebook, in conformance to Section 01 33 29 SUSTAINABILITY REPORTING. Submit the following in accordance with Section 01 33 00 SUBMITTAL PROCEDURES:

SD-01 Preconstruction Submittals

Welder Qualification

SD-02 Shop Drawings

Steel Joist Framing; G

SD-05 Design Data

Design Calculations; G

SD-06 Test Reports

Erection Inspection
Welding Inspections

SD-07 Certificates

Certification of Compliance

1.3 QUALITY ASSURANCE

Perform all work in compliance with the requirements set forth in 29 CFR 1926.

1.3.1 Drawing Requirements

Submit drawings of steel joist framing including fabrication, specifications for shop painting, and identification markings of joists. Show joist type and size, layout in plan, all applicable loads, deflection criteria, and erection details including methods of anchoring, framing at openings, type, size, and location and connections for and spacing of bridging, requirements for field welding, and details of accessories as applicable.

1.3.2 Certification of Compliance

Prior to construction commencement, submit certification for welder qualification, in compliance with AWS D1.1/D1.1M, welding operation, and tacker, stating the type of welding and positions qualified for, the code and procedure qualified under, date qualified, and the firm and individual certifying the qualification tests. Submit certification of compliance for the following:

1.4 DELIVERY, STORAGE, AND HANDLING

Handle, transport, and store joists in a manner to prevent damage affecting their structural integrity. Verify piece count of all joist products upon delivery and inspect all joists products for damage. Report any damage to the joist supplier. Store all items off the ground in a well drained location protected from the weather and easily accessible for inspection and handling. Store joists with top chord down and with joists in a vertical position. Store deep joists horizontally if they were shipped on their sides.

PART 2 PRODUCTS

2.1 SYSTEM DESCRIPTION

Designate steel joists on the drawings in accordance with the standard designations of the Steel Joist Institute. Joists of other standard designations or joists with properties other than those shown may be substituted for the joists designated provided the structural properties are equal to or greater than those of the joists shown and provided all other specified requirements are met.

2.2 STEEL JOISTS

Provide steel joists conforming to SJI LOAD TABLES. Design joists designated K to support the loads given in the applicable standard load tables of SJI LOAD TABLES. Submit design calculations for net uplift loads, non-SJI standard details, and field splices. Include cover letter signed and sealed by the joist manufacturer's registered design professional.

2.2.1 Steel Joist Camber

Do not camber joists.

2.2.2 Special Steel Joists

Provide special joists and connections capable of withstanding the design loads indicated with a live-load deflection less than L/360 for floor joists.

2.2.3 Steel Joist Substitutes and Outriggers

Provide joist substitutes and outriggers conforming to SJI LOAD TABLES with steel angle or channel members.

2.3 ACCESSORIES AND FITTINGS

2.3.1 Bridging

Provide bridging of material, size, and type required by SJI LOAD TABLES for type of joist, chord size, spacing and span. Furnish additional erection bridging if required for stability.

2.3.2 Bearing Plates

Fabricate steel bearing plats from ASTM A36/A36M steel of size and thickness indicated.

2.3.3 Ceiling Extensions

Furnish ceiling extensions, either bottom-chord elements or a separate extension unit of enough strength to support ceiling construction. Extend ends to within 13 mm of finished wall surface unless otherwise indicated.

2.4 SHOP PAINTING

SSPC Paint 15. Shop prime joists, except as modified herein, in accordance with SSPC PA 1. Clean joists in accordance with SSPC SP 2 before priming. If flash rusting occurs, re-clean the surface prior to

application of primer. For joists which require finish painting under Section 09 90 00 PAINTS AND COATINGS, the primer paint must be compatible with the finish paint.

PART 3 EXECUTION

3.1 ERECTION

Install joists in conformance with SJI LOAD TABLES for the joist series indicated. Handle and set joists avoiding damage to the members. Place the "tag end" of joists as shown on the joists placement plans. Ensure that square-end joists are erected right side up. Distribute temporary loads so that joist capacity is not exceeded. Remove damaged joists from the site, except when field repair is approved and such repairs are satisfactorily made in accordance with the manufacturer's recommendations. Do not repair, field modify, or alter any joists without specific written instructions from the Designer of Record and/or joist manufacturer.

Install and connect bridging concurrently with joist erection, before construction loads are applied. Do not apply loads to bridging. Anchor ends of bridging lines at top and bottom chords if terminating at walls or beams. Do not cut away vertical leg of bridging where bridging makes an elevation transition; weld a separate piece of bridging at the transition. Perform all welding in accordance with AWS D1.1/D1.1M.

3.2 BEARING PLATES

Provide bearing plates to accept full bearing after the supporting members have been plumbed and properly positioned, but prior to placing superimposed loads. The area under the plate must be damp-packed solidly with bedding mortar, except where nonshrink grout is indicated on the drawings. Provide bedding mortar and grout as specified.

3.3 PAINTING

3.3.1 Touch-Up Painting

After erection of joists, touch-up connections and areas of abraded shop coat with paint of the same type used for the shop coat.

3.3.2 Field Painting

Paint joists requiring a finish coat in conformance with the requirements of Section 09 90 00 PAINTS AND COATINGS.

3.4 VISUAL INSPECTIONS

Perform the following visual inspections:

a. Verify that all joists are spaced properly.

b. Verify that there is sufficient joist bearing on steel beams, concrete, and masonry.

c. Verify all bridging lines are properly spaced and anchored.

d. Verify that damage has not occurred to the joists during erection.

e. Verify the joists are aligned vertically and there is no lateral sweep in the joists.

f. Where concentrated loads are present on the joists verify that they are located in accordance with the joists placement plan.

g. Verify welding of bridging and joist seats in accordance with AWS D1.1/D1.1M, Section 6. Perform erection inspection and field welding inspections with AWS certified welding inspectors.

h. Verify proper bolting of diagonal bridging and joist seats where the bolts are snug-tight.

-- End of Section --

THIS PAGE HAS BEEN INTENTIONALLY LEFT BLANK

SECTION 05 30 00

STEEL DECKS
05/15

PART 1 GENERAL

1.1 REFERENCES

The publications listed below form a part of this specification to the extent referenced. The publications are referred to within the text by the basic designation only.

AMERICAN IRON AND STEEL INSTITUTE (AISI)

AISI D100	(1991; R 2008) Cold-Formed Steel Design Manual

AMERICAN WELDING SOCIETY (AWS)

AWS D1.3/D1.3M	(2008; Errata 2008) Structural Welding Code - Sheet Steel

ASTM INTERNATIONAL (ASTM)

ASTM A1008/A1008M	(2013) Standard Specification for Steel, Sheet, Cold-Rolled, Carbon, Structural, High-Strength Low-Alloy and High-Strength Low-Alloy with Improved Formability, Solution Hardened, and Bake Hardened
ASTM A653/A653M	(2013) Standard Specification for Steel Sheet, Zinc-Coated (Galvanized) or Zinc-Iron Alloy-Coated (Galvannealed) by the Hot-Dip Process
ASTM A780/A780M	(2009) Standard Practice for Repair of Damaged and Uncoated Areas of Hot-Dip Galvanized Coatings

SOCIETY FOR PROTECTIVE COATINGS (SSPC)

SSPC Paint 20	(2002; E 2004) Zinc-Rich Primers (Type I, Inorganic, and Type II, Organic)

STEEL DECK INSTITUTE (SDI)

ANSI/SDI C	(2011; Int 1 2012; Errata 1 2012) Standard for Composite Steel Floor Deck - Slabs
ANSI/SDI NC	(2010) Standard for Non-Composite Steel Floor Deck
SDI DDMO3	(2004; Errata 2006; Add 2006) Diaphragm Design Manual; 3rd Edition
SDI MOC2	(2006) Manual of Construction with Steel Deck

1.2 SUBMITTALS

Government approval is required for submittals with a "G" designation; submittals not having a "G" designation are for Contractor QC approval. Submittals with an "S" are for inclusion in the Sustainability Notebook, in conformance to Section 01 33 29, SUSTAINABITY REPORTING. Submit the following in accordance with Section 01 33 00 SUBMITTAL PROCEDURES:

SD-02 Shop Drawings

Fabrication Drawings; G

SD-03 Product Data

Accessories

Deck Units

Touch-up Paint

Welding Equipment

Welding Rods and Accessories

SD-05 Design Data

Deck Units; G

SD-07 Certificates

Welder Qualifications

Welding Procedures

Manufacturer's Certificate

1.3 QUALITY ASSURANCE

1.3.1 Deck Units

Furnish deck units and accessory products from a manufacturer regularly engaged in manufacture of steel decking. Provide manufacturer's certificates attesting that the decking material meets the specified requirements.

1.3.2 Qualifications for Welding Work

Follow Welding Procedures of AWS D1.3/D1.3M for sheet steel. Submit qualified Welder Qualifications in accordance with AWS D1.3/D1.3M for sheet steel for stud welding, or under an equivalent approved qualification test. Perform tests on test pieces in positions and with clearances equivalent to those actually encountered. If a test weld fails to meet requirements, perform an immediate retest of two test welds until each test weld passes. Failure in the immediate retest will require the welder be retested after further practice or training, performing a complete set of test welds.

Submit manufacturer's catalog data for Welding Equipment and Welding Rods and Accessories.

1.3.3 Regulatory Requirements

1.3.4 Fabrication Drawings

Show type and location of units, location and sequence of connections, bearing on supports, methods of anchoring, attachment of accessories, adjusting plate details, metal closure strips, size and location of holes to be cut and reinforcement to be provided, the manufacturer's erection instructions and other pertinent details.

1.4 DELIVERY, STORAGE, AND HANDLING

Deliver deck units to the site in a dry and undamaged condition. Store and handle steel deck in a manner to protect it from corrosion, deformation, and other types of damage. Do not use decking for storage or as working platform until units have been fastened into position. Exercise care not to damage material or overload decking during construction. The maximum uniform distributed storage load must not exceed the design live load. Stack decking on platforms or pallets and cover with weathertight ventilated covering. Elevate one end during storage to provide drainage. Maintain deck finish at all times to prevent formation of rust. Repair deck finish using touch-up paint. Replace damaged material.

1.5 DESIGN REQUIREMENTS FOR ROOF DECKS

1.5.1 Properties of Sections

Properties of metal deck sections must comply with engineering design width as limited by the provisions of AISI D100.

1.5.2 Allowable Loads

Indicate total uniform dead and live load for detailing purposes.

PART 2 PRODUCTS

2.1 DECK UNITS

Submit manufacturer's design calculations, or applicable published literature for the structural properties of the proposed deck units.

2.1.1 Form Deck

Conform to ASTM A653/A653M or ASTM A1008/A1008M for deck used as formwork for concrete. Fabricate form deck of the steel design thickness required by the design drawings. Paint with one coat of manufacture's standard paint.

Provide sufficient welds, forming the steel sheets into the cellular floor deck unit, to develop the full horizontal shear at the plane where the steel sheets are joined.

Use panels of maximum possible lengths to minimize end laps. Fabricate deck units in lengths to span 3 or more supports with flush, telescoped, or nested 50 mm laps at ends, and interlocking, or nested side laps, unless otherwise indicated.

2.1.2 Length of Deck Units

Provide deck units of sufficient length to span three or more spacings where possible.

2.1.3 Shop Priming

Shop prime accessories and deck at the factory after coating. Clean surfaces in accordance with the manufacturer's standard procedure followed by a spray, dip or roller coat of rust-inhibitive primer, oven cured.

2.1.4 Touch-Up Paint

Provide touch-up paint for shop-painted units, and touch-up paint for zinc-coated units of an approved galvanizing repair paint with a high-zinc dust content. Touch-up welds with paint conforming to SSPC Paint 20 in accordance with ASTM A780/A780M. Maintain finish of deck units and accessories by using touch-up paint whenever necessary to prevent the formation of rust.

2.2 ACCESSORIES

Provide accessories of same material as deck, unless specified otherwise. Provide manufacturer's standard type accessories, as specified.

2.2.1 Adjusting Plates

Provide adjusting plates, or segments of deck units, of same thickness and configuration as deck units in locations too narrow to accommodate full size units. Provide factory cut plates of predetermined size where possible.

2.2.2 End Closures

Fabricated of sheet metal by the deck manufacturer. Provide end closures minimum 0.75 mm thick to close open ends.

2.2.3 Partition Closures

Provide closures for closing voids above interior walls and partitions that are perpendicular to the direction of the configurations.

PART 3 EXECUTION

3.1 EXAMINATION

Prior to installation of decking units and accessories, examine worksite to verify that as-built structure will permit installation of decking system without modification.

3.2 INSTALLATION

3.2.1 Attachment

Immediately after placement and alignment, and after correcting inaccuracies, permanently fasten steel deck units to structural supports and to adjacent deck units by welding with normal 16 mmdiameter puddle welds, as indicated on the design drawings and in accordance with manufacturer's recommended procedure. Clamp or weight deck units to provide firm contact between deck units and structural supports while performing welding or fastening. Attachment of adjacent deck units by button-punching is prohibited.

3.2.1.1 Welding

Perform welding in accordance with AWS D1.3/D1.3M using methods and electrodes recommended by the manufacturers of the base metal alloys being used. Ensure only operators previously qualified by tests prescribed in AWS D1.3/D1.3M make welds. Immediately recertify, or replace qualified welders, that are producing unsatisfactory welding. Conform to the recommendations of the Steel Deck Institute and the steel deck manufacturer for location, size, and spacing of fastening. Do not use welding washers at the connections of the deck to supports. Do not use welding washers at sidelaps. Holes and similar defects will not be acceptable. Attach all partial or segments of deck units to structural supports in accordance with Section 2.5 of SDI DDMO3.

3.2.1.2 Sidelap Fastening

Lock sidelaps between adjacent floor deck units together by screws as indicated.

3.2.2 Deck Damage

SDI MOC2, for repair of deck damage.

3.2.3 Touch-Up Paint

3.2.3.1 Roof Deck

After roof decking installation, wire brush, clean, and touchup paint the scarred areas on top and bottom surfaces of metal roof decking. The scarred areas include welds, weld scars, bruises, and rust spots. Touchup galvanized surfaces with galvanizing repair paint. Touchup painted surfaces with repair paint of painted surfaces.

3.2.3.2 Floor Deck

For floor decking installation, wire brush, clean, and touchup paint the scarred areas on the top and bottom surfaces of the metal floor decking and on the surface of supporting steel members. Include welds, weld scars, bruises, and rust spots for scarred areas. Touched up the galvanized surfaces with galvanizing repair paint. Touch up the painted surfaces with paint for the repair of painted surfaces.

3.2.4 Accessory Installation

3.2.4.1 Adjusting Plates

Provide in locations too narrow to accommodate full-size deck units and install as shown on shop drawings.

3.2.4.2 End Closures

Provide end closure to close open ends of cells at columns, walls, and openings in deck.

3.2.4.3 Closures Above Partitions

Provide for closing voids between cells over partitions that are perpendicular to direction of cells. Provide a one-piece closure strip for partitions 100 mm nominal or less in thickness and two-piece closure strips for wider partitions. Provide sheet metal closures above fire-rated partitions at both sides of partition with space between filled with fiberglass insulation.

3.2.4.4 Hangers

Provide as indicated to support suspended ceilings. Space devices as indicated.

3.2.5 Concrete Work

Prior to placement of concrete, inspect installed decking to ensure that there has been no permanent deflection or other damage to decking. Replace decking which has been damaged or permanently deflected as approved by the Contracting Officer. Place concrete on metal deck in accordance with Construction Practice of ANSI/SDI C or ANSI/SDI NC.

3.3 FIELD QUALITY CONTROL

3.3.1 Deck Weld Inspection

Visual inspect welds in accordance with AWS D1.3/D1.3M.

-- End of Section --

SECTION 05 50 13

MISCELLANEOUS METAL FABRICATIONS
05/10

PART 1 GENERAL

1.1 REFERENCES

The publications listed below form a part of this specification to the extent referenced. The publications are referred to within the text by the basic designation only.

AMERICAN INSTITUTE OF STEEL CONSTRUCTION (AISC)

AISC 303	(2010) Code of Standard Practice for Steel Buildings and Bridges

AMERICAN WELDING SOCIETY (AWS)

AWS D1.1/D1.1M	(2010; Errata 2011) Structural Welding Code - Steel

ASTM INTERNATIONAL (ASTM)

ASTM A123/A123M	(2013) Standard Specification for Zinc (Hot-Dip Galvanized) Coatings on Iron and Steel Products
ASTM A153/A153M	(2009) Standard Specification for Zinc Coating (Hot-Dip) on Iron and Steel Hardware
ASTM A307	(2014) Standard Specification for Carbon Steel Bolts and Studs, 60 000 PSI Tensile Strength
ASTM A36/A36M	(2014) Standard Specification for Carbon Structural Steel
ASTM A467/A467M	(2007; R 2012) Standard Specification for Machine Coil Chain
ASTM A47/A47M	(1999; R 2014) Standard Specification for Ferritic Malleable Iron Castings
ASTM A500/A500M	(2013) Standard Specification for Cold-Formed Welded and Seamless Carbon Steel Structural Tubing in Rounds and Shapes
ASTM A53/A53M	(2012) Standard Specification for Pipe, Steel, Black and Hot-Dipped, Zinc-Coated, Welded and Seamless
ASTM A653/A653M	(2013) Standard Specification for Steel Sheet, Zinc-Coated (Galvanized) or

	Zinc-Iron Alloy-Coated (Galvannealed) by the Hot-Dip Process
ASTM A780/A780M	(2009) Standard Practice for Repair of Damaged and Uncoated Areas of Hot-Dip Galvanized Coatings
ASTM A786/A786M	(2005; R 2009) Standard Specification for Hot-Rolled Carbon, Low-Alloy, High-Strength Low-Alloy, and Alloy Steel Floor Plates
ASTM A924/A924M	(2014) Standard Specification for General Requirements for Steel Sheet, Metallic-Coated by the Hot-Dip Process
ASTM D1187/D1187M	(1997; E 2011; R 2011) Asphalt-Base Emulsions for Use as Protective Coatings for Metal

MASTER PAINTERS INSTITUTE (MPI)

MPI 79	(Oct 2009) Alkyd Anti-Corrosive Metal Primer

NATIONAL ASSOCIATION OF ARCHITECTURAL METAL MANUFACTURERS (NAAMM)

NAAMM MBG 531	(2009) Metal Bar Grating Manual

1.2 SUBMITTALS

Government approval is required for submittals with a "G" designation; submittals not having a "G" designation are for Contractor Quality Control approval. Submittals with an "S" are for inclusion in the Sustainability Notebook, in conformance to Section 01 33 29 SUSTAINABILITY REPORTING. Submit the following in accordance with Section 01 33 00 SUBMITTAL PROCEDURES:

SD-02 Shop Drawings

Floor gratings, installation drawings; G

Embedded angles and plates, installation drawings; G

Roof hatch; G

Submit fabrication drawings showing layout(s), connections to structural system, and anchoring details as specified in AISC 303.

Submit templates, erection and installation drawings indicating thickness, type, grade, class of metal, and dimensions. Show construction details, reinforcement, anchorage, and installation with relation to the building construction.

SD-03 Product Data

Floor gratings

Roof hatch

1.3 QUALIFICATION OF WELDERS

Qualify welders in accordance with AWS D1.1/D1.1M. Use procedures, materials, and equipment of the type required for the work.

1.4 DELIVERY, STORAGE, AND PROTECTION

Protect from corrosion, deformation, and other types of damage. Store items in an enclosed area free from contact with soil and weather. Remove and replace damaged items with new items.

PART 2 PRODUCTS

2.1 MATERIALS

2.1.1 Structural Carbon Steel

ASTM A36/A36M.

2.1.2 Structural Tubing

ASTM A500/A500M.

2.1.3 Steel Pipe

ASTM A53/A53M, Type E or S, Grade B.

2.1.4 Fittings for Steel Pipe

Standard malleable iron fittings ASTM A47/A47M.

2.1.5 Gratings

a. Metal bar type grating NAAMM MBG 531.

2.1.6 Floor Plates, Patterned

Floor plate ASTM A786/A786M. Steel plate shall not be less than 1.9 mm.

2.1.7 Anchor Bolts

ASTM A307. Where exposed, shall be of the same material, color, and finish as the metal to which applied.

2.2 FABRICATION FINISHES

2.2.1 Galvanizing

Hot-dip galvanize items specified to be zinc-coated, after fabrication where practicable. Galvanizing: ASTM A123/A123M, ASTM A153/A153M, ASTM A653/A653M or ASTM A924/A924M, Z275, as applicable.

2.2.2 Galvanize

Anchor bolts, grating fasteners, washers, and parts or devices necessary for proper installation, unless indicated otherwise.

2.2.3 Repair of Zinc-Coated Surfaces

Repair damaged surfaces with galvanizing repair method and paint conforming to ASTM A780/A780M or by application of stick or thick paste material specifically designed for repair of galvanizing, as approved by Contracting Officer. Clean areas to be repaired and remove slag from welds. Heat surfaces to which stick or paste material is applied, with a torch to a temperature sufficient to melt the metallics in stick or paste; spread molten material uniformly over surfaces to be coated and wipe off excess material.

2.2.4 Nonferrous Metal Surfaces

Protect by plating, anodic, or organic coatings.

2.3 EXTRUDED FLOOR MAT FRAMES

Provide recess frames for roll-up floor mats of extruded 6063-T5 aluminum, in sizes shown. Miter corners to ensure accurate fitting. Determine depth of recess by the mat thickness. Anchor frames in concrete with anchor pins or bolts. Provide roll-up mats of aluminum construction with carpet surface. Provide roll-up mats for use in recessed area. Show construction details of recessed areas on the drawings.

2.4 FLOOR GRATINGS

Provide steel and aluminum grating in accordance with NAAMM MBG 531 for bar type grating or manufacturer's charts for plank grating. Galvanize steel floor gratings.

a. NAAMM MBG 531, band ends of gratings with bars of the same or greater thickness than the metal used for grating. Weld banding bars to the bearing bars or channels at least every fourth bar or channel and in every corner. Tack weld intervening bars or channels. Band diagonal or round cuts by welding bars of the same or greater thickness metal used for grating in accordance with the manufacturer's standard for trim unless otherwise indicated.

b. Anchor gratings to structural members with bolts.

2.5 GUARD POSTS (BOLLARDS/PIPE GUARDS)

Provide 150 mm painted standard weight steel pipe as specified in ASTM A53/A53M. Anchor posts in concrete as indicated and fill solidly with concrete with minimum compressive strength of 17 MPa.

2.6 MISCELLANEOUS PLATES AND SHAPES

Provide for items that do not form a part of the structural steel framework, such as lintels, sill angles, miscellaneous mountings and frames.

Provide angles and plates, ASTM A36/A36M, for embedment as indicated. Galvanize embedded items exposed to the elements according to ASTM A123/A123M.

2.7 SAFETY CHAINS

Construct safety chains of galvanized steel, straight link type, 5 mm diameter, with at least twelve links per 300 mm, and with snap hooks on each end. Test safety chain in accordance with ASTM A467/A467M, Class CS. Provide snap hooks of boat type. Provide galvanized 10 mm bolt with 20 mm eye diameter for attachment of chain, anchored as indicated. Supply two chains, 100 mm longer than the anchorage spacing, for each guarded area. Locate safety chain where indicated. Mount the top chain 1050 mm above the floor and mount the lower chain 600 mm above the floor.

PART 3 EXECUTION

3.1 GENERAL INSTALLATION REQUIREMENTS

Install items at locations indicated, according to manufacturer's instructions. Verify all measurements and take all field measurements necessary before fabrication. Exposed fastenings shall be compatible materials, shall generally match in color and finish, and harmonize with the material to which fastenings are applied. Include materials and parts necessary to complete each item, even though such work is not definitely shown or specified. Poor matching of holes for fasteners shall be cause for rejection. Conceal fastenings where practicable. Thickness of metal and details of assembly and supports shall provide strength and stiffness. Form joints exposed to the weather shall be formed to exclude water. Items listed below require additional procedures.

3.2 WORKMANSHIP

Provide miscellaneous metalwork that is well formed to shape and size, with sharp lines and angles and true curves. Drilling and punching shall produce clean true lines and surfaces. Provide continuous welding along the entire area of contact except where tack welding is permitted. Do not tack weld exposed connections of work in place and ground smooth. Provide a smooth finish on exposed surfaces of work in place and unless otherwise approved, flush exposed riveting. Mill joints where tight fits are required. Corner joints shall be coped or mitered, well formed, and in true alignment. Accurately set work to established lines and elevations and securely fastened in place. Install in accordance with manufacturer's installation instructions and approved drawings, cuts, and details.

3.3 ANCHORAGE, FASTENINGS, AND CONNECTIONS

Provide anchorage where necessary for fastening miscellaneous metal items securely in place. Include for anchorage not otherwise specified or indicated slotted inserts, expansion shields, and powder-driven fasteners, when approved for concrete; toggle bolts and through bolts for masonry; machine and carriage bolts for steel; through bolts. Do not use wood plugs in any material. Provide non-ferrous attachments for non-ferrous metal. Make exposed fastenings of compatible materials, generally matching in color and finish, to which fastenings are applied. Conceal fastenings where practicable.

3.4 BUILT-IN WORK

Form for anchorage metal work built-in with concrete or masonry, or provide with suitable anchoring devices as indicated or as required. Furnish metal work in ample time for securing in place as the work progresses.

3.5 WELDING

Perform welding, welding inspection, and corrective welding, in accordance with AWS D1.1/D1.1M. Use continuous welds on all exposed connections. Grind visible welds smooth in the finished installation.

3.6 FINISHES

3.6.1 Dissimilar Materials

Where dissimilar metals are in contact, protect surfaces with a coat conforming to MPI 79 to prevent galvanic or corrosive action. Where aluminum is in contact with concrete, plaster, mortar, masonry, wood, or absorptive materials subject to wetting, protect with ASTM D1187/D1187M, asphalt-base emulsion.

3.6.2 Field Preparation

Remove rust preventive coating just prior to field erection, using a remover approved by the rust preventive manufacturer. Surfaces, when assembled, shall be free of rust, grease, dirt and other foreign matter.

3.6.3 Environmental Conditions

Do not clean or paint surface when damp or exposed to foggy or rainy weather, when metallic surface temperature is less than minus 15 degrees C above the dew point of the surrounding air, or when surface temperature is below 7 degrees C or over 35 degrees C, unless approved by the Contracting Officer.

3.7 ROOF HATCH (SCUTTLES)

Provide aluminum with 75 mm beaded flange, welded and ground at corner. Provide a minimum clear opening as indicated. Construction and accessories as follows:

a. Provide hatch completely assembled with pintle hinges, compression spring operators enclosed in telescopic tubes, positive snap latch with turn handles on inside and outside, and neoprene draft seal. Provide fasteners for padlocking on the inside. Equip the cover with an automatic hold-open arm complete with grip handle to permit one-hand release. Cover action shall be smooth through its entire range with an operating pressure of approximately 130 N.

3.8 INSTALLATION OF GUARD POSTS (BOLLARDS/PIPE GUARDS)

Set pipe guards vertically in concrete piers. Construct piers of, and the hollow cores of the pipe filled with, concrete having a compressive strength of 21 MPa.

3.9 RECESSED FLOOR FRAMES & MATS

Verify field measurements prior to releasing materials for fabrication by the manufacturer. Use a mat frame to ensure recess accuracy in size, shape and depth. Form drain pit by blocking out concrete when frames are installed, dampproof after concrete has set. Assemble frames onsite and install so that upper edge will be level with finished floor surface. Screeded the concrete base inside the mat recess frame area using the edge provided by the frame as a guide and anchor into the cement with anchor pins a minimum of 600 mm on centers.

3.10 MOUNTING OF SAFETY CHAINS

Mount safety chains 1050 mm and 600 mm above the floor.

-- End of Section --

THIS PAGE HAS BEEN INTENTIONALLY LEFT BLANK

SECTION 05 51 33

METAL LADDERS
05/10

PART 1 GENERAL

1.1 REFERENCES

The publications listed below form a part of this specification to the extent referenced. The publications are referred to within the text by the basic designation only.

ALUMINUM ASSOCIATION (AA)

AA DAF45	(2003; Reaffirmed 2009) Designation System for Aluminum Finishes

AMERICAN WELDING SOCIETY (AWS)

AWS D1.1/D1.1M	(2010; Errata 2011) Structural Welding Code - Steel

ASTM INTERNATIONAL (ASTM)

ASTM A123/A123M	(2013) Standard Specification for Zinc (Hot-Dip Galvanized) Coatings on Iron and Steel Products
ASTM A153/A153M	(2009) Standard Specification for Zinc Coating (Hot-Dip) on Iron and Steel Hardware
ASTM A36/A36M	(2014) Standard Specification for Carbon Structural Steel
ASTM A47/A47M	(1999; R 2014) Standard Specification for Ferritic Malleable Iron Castings
ASTM A500/A500M	(2013) Standard Specification for Cold-Formed Welded and Seamless Carbon Steel Structural Tubing in Rounds and Shapes
ASTM A53/A53M	(2012) Standard Specification for Pipe, Steel, Black and Hot-Dipped, Zinc-Coated, Welded and Seamless
ASTM A653/A653M	(2013) Standard Specification for Steel Sheet, Zinc-Coated (Galvanized) or Zinc-Iron Alloy-Coated (Galvannealed) by the Hot-Dip Process
ASTM A780/A780M	(2009) Standard Practice for Repair of Damaged and Uncoated Areas of Hot-Dip Galvanized Coatings
ASTM A924/A924M	(2014) Standard Specification for General

	Requirements for Steel Sheet, Metallic-Coated by the Hot-Dip Process
ASTM B108/B108M	(2014) Standard Specification for Aluminum-Alloy Permanent Mold Castings
ASTM B209M	(2014) Standard Specification for Aluminum and Aluminum-Alloy Sheet and Plate (Metric)
ASTM B221M	(2013) Standard Specification for Aluminum and Aluminum-Alloy Extruded Bars, Rods, Wire, Profiles, and Tubes (Metric)
ASTM B26/B26M	(2014; E 2015) Standard Specification for Aluminum-Alloy Sand Castings
ASTM D1187/D1187M	(1997; E 2011; R 2011) Asphalt-Base Emulsions for Use as Protective Coatings for Metal

MASTER PAINTERS INSTITUTE (MPI)

MPI 79	(Oct 2009) Alkyd Anti-Corrosive Metal Primer

U.S. NATIONAL ARCHIVES AND RECORDS ADMINISTRATION (NARA)

29 CFR 1910.27	Fixed Ladders

1.2 SUBMITTALS

Government approval is required for submittals with a "G" designation; submittals not having a "G" designation are for information only.for Contractor Quality Control approval.Submittals with an "S" are for inclusion in the Sustainability Notebook, in conformance to Section 01 33 29 SUSTAINABILITY REPORTING. Submit the following in accordance with Section 01 33 00 SUBMITTAL PROCEDURES:

SD-02 Shop Drawings

Ladders, installation drawings

SD-03 Product Data

Ladders

1.3 QUALIFICATION OF WELDERS

Qualify welders in accordance with AWS D1.1/D1.1M. Use procedures, materials, and equipment of the type required for the work.

1.4 DELIVERY, STORAGE, AND PROTECTION

Protect from corrosion, deformation, and other types of damage. Store items in an enclosed area free from contact with soil and weather. Remove and replace damaged items with new items.

PART 2 PRODUCTS

2.1 MATERIALS

2.1.1 Structural Carbon Steel

ASTM A36/A36M.

2.1.2 Structural Tubing

ASTM A500/A500M.

2.1.3 Steel Pipe

ASTM A53/A53M, Type E or S, Grade B.

2.1.4 Fittings for Steel Pipe

Standard malleable iron fittings ASTM A47/A47M.

2.1.5 Aluminum Alloy Products

Conform to ASTM B209M for sheet plate, ASTM B221M for extrusions and ASTM B26/B26M or ASTM B108/B108M for castings, as applicable. Provide aluminum extrusions at least 3 mm thick and aluminum plate or sheet at least 1.3 mm thick.

2.2 FABRICATION FINISHES

2.2.1 Galvanizing

Hot-dip galvanize items specified to be zinc-coated, after fabrication where practicable. Galvanizing: ASTM A123/A123M, ASTM A153/A153M, ASTM A653/A653M or ASTM A924/A924M, Z275, as applicable.

2.2.2 Galvanize

Anchor bolts, washers, and parts or devices necessary for proper installation, unless indicated otherwise.

2.2.3 Repair of Zinc-Coated Surfaces

Repair damaged surfaces with galvanizing repair method and paint conforming to ASTM A780/A780M or by application of stick or thick paste material specifically designed for repair of galvanizing, as approved by Contracting Officer. Clean areas to be repaired and remove slag from welds. Heat surfaces to which stick or paste material is applied, with a torch to a temperature sufficient to melt the metallics in stick or paste; spread molten material uniformly over surfaces to be coated and wipe off excess material.

2.2.4 Nonferrous Metal Surfaces

Protect by plating, anodic, or organic coatings.

2.2.5 Aluminum Surfaces

2.2.5.1 Surface Condition

Before finishes are applied, remove roll marks, scratches, rolled-in scratches, kinks, stains, pits, orange peel, die marks, structural streaks, and other defects which will affect uniform appearance of finished surfaces.

2.2.5.2 Aluminum Finishes

Unexposed plate and extrusions may have mill finish as fabricated. Sandblast castings' finish, medium, AA DAF45. Unless otherwise specified, provide all other aluminum items with standard mill finish. Provide a coating thickness not less than that specified for protective and decorative type finishes for items used in interior locations or architectural Class I type finish for items used in exterior locations in AA DAF45.

2.3 LADDERS

Fabricate vertical ladders conforming to Section 7 of 29 CFR 1910.27. Use 65 by 10 mm steel flats for stringers and 20 mm diameter steel rods for rungs. Rungs to be not less than 400 mm wide, spaced 300 mm apart, plug welded or shouldered and headed into stringers. Install ladders so that the distance from the rungs to the finished wall surface will not be less than 175 mm. Provide heavy clip angles riveted or bolted to the stringer and drilled for not less than two 12 mm diameter expansion bolts . Provide intermediate clip angles not over 1200 mm on centers.

PART 3 EXECUTION

3.1 GENERAL INSTALLATION REQUIREMENTS

Install items at locations indicated, according to manufacturer's instructions. Verify all measurements and take all field measurements necessary before fabrication. Provide Exposed fastenings of compatible materials, generally matching in color and finish, and harmonize with the material to which fastenings are applied. Include materials and parts necessary to complete each item, even though such work is not definitely shown or specified. Poor matching of holes for fasteners will be cause for rejection. Conceal fastenings where practicable. Thickness of metal and details of assembly and supports must provide strength and stiffness. Formed joints exposed to the weather to exclude water. Items listed below require additional procedures.

3.2 WORKMANSHIP

Metalwork must be well formed to shape and size, with sharp lines and angles and true curves. Drilling and punching must produce clean true lines and surfaces. Continuously weld along the entire area of contact. Do not tack weld exposed connections of work in place. Grid smooth exposed welds. Provide smooth finish on exposed surfaces of work in place, unless otherwise approved. Where tight fits are required, mill joints. Cope or miter corner joints, well formed, and in true alignment. Install in accordance with manufacturer's installation instructions and approved drawings, cuts, and details.

3.3 ANCHORAGE, FASTENINGS, AND CONNECTIONS

Provide anchorage where necessary for fastening metal items securely in place. Include for anchorage not otherwise specified or indicated slotted inserts, expansion anchors,and powder-actuated fasteners, when approved for concrete; toggle bolts and through bolts for masonry; machine bolts, carriage bolts and powder-actuated threaded studs for steel; through bolts, lag bolts, and screws for wood. Do not use wood plugs in any material. Provide non-ferrous attachments for non-ferrous metal. Make exposed fastenings of compatible materials, generally matching in color and finish, to which fastenings are applied. Conceal fastenings where practicable.

3.4 WELDING

Perform welding, welding inspection, and corrective welding, in accordance with AWS D1.1/D1.1M. Use continuous welds on all exposed connections. Grind visible welds smooth in the finished installation.

3.5 FINISHES

3.5.1 Dissimilar Materials

Where dissimilar metals are in contact, protect surfaces with a coat conforming to MPI 79 to prevent galvanic or corrosive action. Where aluminum is in contact with concrete, plaster, mortar, masonry, wood, or absorptive materials subject to wetting, protect with ASTM D1187/D1187M, asphalt-base emulsion.

3.5.2 Environmental Conditions

Do not clean or paint surface when damp or exposed to foggy or rainy weather, when metallic surface temperature is less than minus 15 degrees C above the dew point of the surrounding air, or when surface temperature is below 7 degrees C or over 35 degrees C, unless approved by the Contracting Officer.

3.6 LADDERS

Secure to the adjacent construction with the clip angles attached to the stringer. Secure to concrete with not less than two 12 mm diameter expansion bolts. Install intermediate clip angles not over1200 mm on center. Install brackets as required for securing of ladders welded or bolted to structural steel or built into the concrete. Ends of ladders must not rest upon floor.

-- End of Section --

THIS PAGE HAS BEEN INTENTIONALLY LEFT BLANK

SECTION 05 52 00

METAL RAILINGS
02/11

PART 1 GENERAL

1.1 REFERENCES

The publications listed below form a part of this specification to the extent referenced. The publications are referred to within the text by the basic designation only.

AMERICAN WELDING SOCIETY (AWS)

AWS D1.1/D1.1M	(2010; Errata 2011) Structural Welding Code - Steel

ASME INTERNATIONAL (ASME)

ASME B18.2.3.8M	(1981; R 2005) Metric Hex Lag Screws
ASME B18.22M	(1981; R 2010) Metric Plain Washers
ASME B18.6.7M	(1999; R 2010) Metric Machine Screws

ASTM INTERNATIONAL (ASTM)

ASTM A108	(2013) Standard Specification for Steel Bar, Carbon and Alloy, Cold-Finished
ASTM A123/A123M	(2013) Standard Specification for Zinc (Hot-Dip Galvanized) Coatings on Iron and Steel Products
ASTM A153/A153M	(2009) Standard Specification for Zinc Coating (Hot-Dip) on Iron and Steel Hardware
ASTM A27/A27M	(2013) Standard Specification for Steel Castings, Carbon, for General Application
ASTM A283/A283M	(2013) Standard Specification for Low and Intermediate Tensile Strength Carbon Steel Plates
ASTM A36/A36M	(2014) Standard Specification for Carbon Structural Steel
ASTM A47/A47M	(1999; R 2014) Standard Specification for Ferritic Malleable Iron Castings
ASTM A500/A500M	(2013) Standard Specification for Cold-Formed Welded and Seamless Carbon Steel Structural Tubing in Rounds and Shapes
ASTM A512	(2006) Standard Specification for

	Cold-Drawn Buttweld Carbon Steel Mechanical Tubing
ASTM A53/A53M	(2012) Standard Specification for Pipe, Steel, Black and Hot-Dipped, Zinc-Coated, Welded and Seamless
ASTM A575	(1996; E 2013; R 2013) Standard Specification for Steel Bars, Carbon, Merchant Quality, M-Grades
ASTM F568M	(2007) Standard Specification for Carbon and Alloy Steel Externally Threaded Metric Fasteners

NATIONAL ASSOCIATION OF ARCHITECTURAL METAL MANUFACTURERS (NAAMM)

NAAMM AMP 521	(2001) Pipe Railing Manual

1.2 ADMINISTRATIVE REQUIREMENTS

1.2.1 Pre-Installation MeetingsWithin 30 days of Contract Award, submit fabrication drawings to the Contracting Officer for the following items:
e. Anchorage and fastening systems

Submit manufacturer's catalog data, including two copies of manufacturers specifications, load tables, dimension diagrams, and anchor details for the following items:k. Anchorage and fastening systems

1.3 SUBMITTALS

Government approval is required for submittals with a "G" designation; submittals not having a "G" designation are for Contractor Quality Control approval. Submittals with an "S" are for inclusion in the Sustainability Notebook, in conformance to Section 01 33 29 SUSTAINABILITY REPORTING. Submit the following in accordance with Section 01 33 00 SUBMITTAL PROCEDURES:

SD-02 Shop Drawings

Fabrication Drawings; G

Iron and Steel Hardware; G

Steel Shapes, Plates, Bars and Strips; G

SD-03 Product Data

Structural Steel Plates, Shapes, and Bars; G

Structural Steel Tubing; G

Cold-Drawn Steel Tubing; G

Concrete Inserts; G

Protective Coating; G

Steel Railings and Handrails; G

Anchorage and Fastening Systems; G

SD-07 Certificates

Welder Qualification; G

SD-08 Manufacturer's Instructions

Installation Instructions; G

1.4 QUALITY ASSURANCE

1.4.1 Welder Qualification

Submit certified welder qualification by tests in accordance with AWS D1.1/D1.1M, or under an equivalent approved qualification test. In addition be performed on test pieces in positions and with clearances equivalent to those actually encountered. If a test weld fails to meet requirements, make an immediate retest of two test welds and ensure each test weld passes. Failure in the immediate retest will require that the welder be retested after further practice or training and make a complete set of test welds.

PART 2 PRODUCTS

2.1 SYSTEM DESCRIPTION

Provide complete, detailed fabrication and installation drawings for all iron and steel hardware, and for all steel shapes, plates, bars and strips used in accordance with the design specifications referenced in this section.

Pre-assemble items in the shop to the greatest extent possible. Disassemble units only to the extent necessary for shipping and handling. Clearly mark units for reassembly and coordinated installation.

For the fabrication of work exposed to view, use only materials that are smooth and free of surface blemishes, including pitting, seam marks, roller marks, rolled trade names, and roughness. Remove blemishes by grinding, or by welding and grinding, prior to cleaning, treating, and application of surface finishes, including zinc coatings.

2.2 GENERAL FABRICATION

Provide railings and handrails detail plans and elevations at not less than 1 to 12 scale. Provide details of sections and connections at not less than 1 to 4 scale. Also detail setting drawings, diagrams, templates for installation of anchorages, including concrete inserts, anchor bolts, and miscellaneous metal items having integral anchors.

Use materials of size and thicknesses indicated or, if not indicated, of required size and thickness to produce adequate strength and durability in finished product for intended use. Work materials to dimensions indicated on approved detail drawings, using proven details of fabrication and support. Use type of materials indicated or specified for the various components of work.

Form exposed work true to line and level with accurate angles and surfaces and straight sharp edges. Ensure all exposed edges are eased to a radius of approximately 0.8 millimeter. Bend metal corners to the smallest radius possible without causing grain separation or otherwise impairing the work.

Weld corners and seams continuously and in accordance with the recommendations of AWS D1.1/D1.1M. Grind exposed welds smooth and flush to match and blend with adjoining surfaces.

Form exposed connections with hairline joints that are flush and smooth, using concealed fasteners wherever possible. Use exposed fasteners of the type indicated or, if not indicated, use Phillips flathead (countersunk) screws or bolts.

Provide anchorage of the type indicated and coordinated with the supporting structure. Fabricate anchoring devices and space as indicated and as required to provide adequate support for the intended use of the work.

Use hot-rolled steel bars for work fabricated from bar stock unless work is indicated or specified to be fabricated from cold-finished or cold-rolled stock.

2.3 STRUCTURAL STEEL PLATES, SHAPES AND BARS

Provide structural-size shapes and plates, except plates to be bent or cold-formed, conforming to ASTM A36/A36M, unless otherwise noted.

Provide steel plates, to be bent or cold-formed,conforming to ASTM A283/A283M, Grade C.

Provide steel bars and bar-size shapes conforming to ASTM A36/A36M, unless otherwise noted.

2.4 STRUCTURAL STEEL TUBING

Provide structural steel tubing, hot-formed, welded or seamless, conforming to ASTM A500/A500M, Grade B, unless otherwise noted.

2.5 HOT-ROLLED CARBON STEEL BARS

Provide bars and bar-size shapes conforming to ASTM A575, grade as selected by the fabricator.

2.6 COLD-FINISHED STEEL BARS

Provide cold-finished steel bars conforming to ASTM A108, grade as selected by the fabricator.

2.7 COLD-DRAWN STEEL TUBING

Provide tubing conforming to ASTM A512, sunk drawn, butt-welded, cold-finished, and stress-relieved.

2.8 STEEL PIPE

Provide pipe conforming to ASTM A53/A53M, type as selected, Grade B; primed finish, unless galvanizing is required; standard weight (Schedule

40).

2.9 CONCRETE INSERTS

Provide threaded-type concrete inserts consisting of galvanized ferrous castings, internally threaded to receive M20 diameter machine bolts; either malleable iron conforming to ASTM A47/A47M or cast steel conforming to ASTM A27/A27M, hot-dip galvanized in accordance with ASTM A153/A153M.

2.10 FASTENERS

Provide galvanized zinc-coated fasteners in accordance with ASTM A153/A153M used for exterior applications or where built into exterior walls or floor systems. Select fasteners for the type, grade, and class required for the installation of steel stair items.

Provide standard hexagon-head bolts, conforming to ASTM F568M.

Provide cadmium-plated steel machine screws conforming to ASME B18.6.7M.

Provide plain round, general-assembly-grade, carbon steel washers conforming to ASME B18.22M.

Provide helical spring, carbon steel lockwashers conforming to ASME B18.2.3.8M.

2.11 PROTECTIVE COATING

Provide hot dipped galvanized steelwork as indicated in accordance with ASTM A123/A123M. Touch up abraded surfaces and cut ends of galvanized members with zinc-dust, zinc-oxide primer, or an approved galvanizing repair compound.

2.12 STEEL RAILINGS AND HANDRAILS

Design handrails to resist a concentrated load of 490 N in any direction at any point of the top of the rail or 290 N/m applied horizontally to top of the rail, whichever is more severe. NAAMM AMP 521, provide the same size rail and post. Provide pipe collars of the same material and finish as the handrail and posts.

2.12.1 Steel Handrails

Provide steel handrails, including inserts in concrete, steel pipe conforming to ASTM A53/A53M or structural tubing conforming to ASTM A500/A500M, Grade A or B of equivalent strength. Provide steel railings of 40 mm nominal size, hot-dip galvanized.

a. Fabrication: Joint posts, rail, and corners by one of the following methods:

   (1) Flush-type rail fittings of commercial standard, welded and ground smooth with railing splice locks secured with 10 mm hexagonal-recessed-head setscrews.

   (2) Mitered and welded joints made by fitting post to top rail and intermediate rail to post, mitering corners, groove welding joints, and grinding smooth. Butt railing splices and reinforce them by a tight fitting interior sleeve not less than 150 mm long.

(3) Railings may be bent at corners in lieu of jointing, provided bends are made in suitable jigs and the pipe is not crushed.

b. Provide removable sections as indicated.

Provide galvanized railings, including pipe, fittings, brackets, fasteners, and other ferrous metal components.

PART 3 EXECUTION

3.1 INSTALLATION INSTRUCTIONS

Submit manufacturer's installation instructions for the following products to be used in the fabrication of steel stair railing and hand rail work:

3.2 PREPARATION

Adjust stair railings and handrails prior to securing in place to ensure proper matching at butting joints and correct alignment throughout their length. Space posts not more than 2440 millimeter on center. Plumb posts in each direction. Secure posts and rail ends to building construction as follows:

Anchor posts in concrete by means of pipe sleeves set and anchored into concrete. Provide sleeves of galvanized, standard weight, steel pipe, not less than 150 millimeter long, and having an inside diameter not less than 13 millimeter greater than the outside diameter of the inserted pipe post. Provide steel plate closure secured to the bottom of the sleeve, with closure width and length not less than 25 millimeter greater than the outside diameter of the sleeve. After posts have been inserted into sleeves, fill the annular space between post and sleeve with molten lead, sulfur, or a quick-setting hydraulic cement. Cover anchorage joint with a round steel flange welded to the post.

Anchor posts to steel with steel oval flanges, angle type or floor type as required by conditions, welded to posts and bolted to the steel supporting members.

Anchor rail ends into concrete and masonry with steel round flanges welded to rail ends and anchored into the wall construction with lead expansion shields and bolts.

Anchor rail ends to steel with steel oval or round flanges welded to tail ends and bolted to the structural steel members.

Secure handrails to walls by means of wall brackets and wall return fitting at handrail ends. Provide brackets of malleable iron castings, with not less than 75 millimeter projection from the finish wall surface to the center of the pipe drilled to receive one M10 bolt. Locate brackets not more than 1525 millimeter on center. Provide wall return fittings of cast iron castings, flush-type, with the same projection as that specified for wall brackets. Secure wall brackets and wall return fittings to building construction as follows:

For concrete and solid masonry anchorage, use bolt anchor expansion shields and lag bolts.

3.3 STEEL HANDRAIL

Install in pipe sleeves embedded in concrete and filled with non-shrink grout or quick setting anchoring cement with anchorage covered with standard pipe collar pinned to post by means of base plates bolted to stringers or structural steel frame work. Secure rail ends by steel pipe flanges anchored by expansion shields and bolts.

3.4 FIELD WELDING

Ensure procedures of manual shielded metal arc welding, appearance and quality of welds made, and methods used in correcting welding work comply with AWS D1.1/D1.1M.

-- End of Section --

THIS PAGE HAS BEEN INTENTIONALLY LEFT BLANK

SECTION 05 59 10

ROLLING COVER FOR AVIATION REFUELING VAULTS
02/10

PART 1 GENERAL

This specification covers the factory fabrication, assembly, testing, and shipping requirements for custom fabricated rolling covers having steel shells as indicated on the drawings. Covers are to be field installed by other than the manufacturer on variously sized new tanks.

1.1 REFERENCES

The publications listed below form a part of this specification to the extent referenced. The publications are referred to in the text by basic designation only.

ALUMINUM ASSOCIATION (AA)

AA ADM	(2015) Aluminum Design Manual

AMERICAN WELDING SOCIETY (AWS)

AWS D1.1/D1.1M	(2010; Errata 2011) Structural Welding Code - Steel
AWS D1.2/D1.2M	(2014) Structural Welding Code - Aluminum

ASME INTERNATIONAL (ASME)

ASME B4.1	(1967; R 2009) Preferred Limits and Fits for Cylindrical Parts
ASME B46.1	(2009) Surface Texture, Surface Roughness, Waviness and Lay
ASME BPVC SEC IX	(2010) BPVC Section IX-Welding and Brazing Qualifications

ASTM INTERNATIONAL (ASTM)

ASTM A123/A123M	(2013) Standard Specification for Zinc (Hot-Dip Galvanized) Coatings on Iron and Steel Products
ASTM A276/A276M	(2015) Standard Specification for Stainless Steel Bars and Shapes
ASTM A307	(2014) Standard Specification for Carbon Steel Bolts and Studs, 60 000 PSI Tensile Strength
ASTM A36/A36M	(2014) Standard Specification for Carbon Structural Steel
ASTM A500/A500M	(2013) Standard Specification for

	Cold-Formed Welded and Seamless Carbon Steel Structural Tubing in Rounds and Shapes
ASTM A563	(2007a; R2014) Standard Specification for Carbon and Alloy Steel Nuts
ASTM B209	(2014) Standard Specification for Aluminum and Aluminum-Alloy Sheet and Plate

1.2 ADMINISTRATIVE REQUIREMENTS

Submit manufacturer's catalogue cuts and dimensional sheets. Include a description of the item, materials of construction, and dimensions. Provide data sufficient to indicate compliance with specifications. Mark items pertaining to specifications with a heavy black arrow.

1.3 SUBMITTALS

Government approval is required for submittals with a "G" designation; submittals not having a "G" designation are for Contractor Quality Control approval. Submit the following in accordance with Section 01 33 00 SUBMITTAL PROCEDURES:

SD-01 Preconstruction Submittals

Assembly Tests; G
Acceptance Testing; G

SD-02 Shop Drawings

Detail Drawings; G

SD-03 Product Data

Wheel Assemblies; G
Materials List; G
Welding; G
Welding of Aluminum; G
Steel Welding Repairs; G

SD-07 Certificates

Welder Qualifications
Welding of Aluminum

1.4 QUALITY ASSURANCE

1.4.1 Welder Qualifications

Submit certification stating that the welders, welding operators and tack welders who will perform structural steel welding have been qualified for the particular type of work to be done in accordance with the requirements of AWS D1.1/D1.1M, Section 4, prior to commencing fabrication. The certificate shall list the qualified welders by name and shall specify the code and procedures under which qualified and the date of qualification. Prior qualification will be accepted if welders have performed satisfactory work under the code for which qualified within the preceding three months. Require welders to repeat the qualifying tests when their

work indicates a reasonable doubt as to proficiency. Those passing the requalification tests will be recertified. Those not passing will be disqualified until passing. All expenses in connection with qualification and requalification shall be borne by the Contractor.

1.4.2 Workmanship

Workmanship shall be of the highest grade and in accordance with the best modern practices to conform with the specifications for the item of work being furnished. Welding shall be continuous along the entire area of contact except where tack welding is permitted. Exposed connections of work in place shall not be tack welded. Exposed welds shall be ground smooth. Exposed surfaces of work in place shall have a smooth finish.

1.4.3 Detail Drawings

Submit detail drawings for metalwork and machine work prior to fabrication. With the detail drawings submit a materials list for fabricated items. Detail drawings for metalwork and machine work shall include catalog cuts, templates, fabrication and assembly details, and type, grade, and class of material as appropriate. Also include a sketch showing final wheel to axle mounting (i..e., washers, nuts, spacers). Elements of fabricated items inadvertently omitted on contract drawings shall be detailed by the fabricator and indicated on the detail drawings. Drawings shall include all dimensional and tolerance data for each size of vault being fabricated.

PART 2 PRODUCTS

2.1 MATERIALS AND EQUIPMENT

2.1.1 Bolts and Cap Screws

All bolts shall be steel and shall conform to ASTM A307, Grade A, Hex.

2.1.2 Nuts

Shall conform to ASTM A563, Grade A, Hex, and shall be of the same finish as the fasteners they are used with.

2.1.3 Washers

Flat washers shall conform to the requirements of ASTM A276/A276M (stainless steel).

2.1.4 Tube Steel

Structural tubing shall conform to ASTM A500/A500M, Grade B.

2.1.5 Structural Steel

Carbon grade steel shall conform to ASTM A36/A36M

2.1.6 Rolling Cover Shell

Cover shell material shall be as indicated on the drawings and specified as follows:

2.1.6.1 Aluminum

Aluminum sheets and strips shall comply with ASTM B209, alloy and temper best suited for the purpose.

2.1.7 Wheel Assemblies

2.1.7.1 Wheels

Provide the heavy duty industrial type that is the product of a company regularly engaged in the production of wheels. The wheels shall have solid rubber tires that are molded onto spoked or solid centers that are either cast, forged, or machined. The rubber shall have a hardness rating of 80-90 Shore A durometer. Tires shall not stretch or work loose from the metal center. The wheels shall have roller bearings and shall be pressure lubricated from a grease fitting when available. The wheels shall work in a temperature range of -40 to +95 degrees C. The entire wheel assembly shall be symmetrical and shall spin concentrically around the bearing. Finish metal centers with either an epoxy paint, a powder coating, or manufacture galvanized. The diameter of the carrier wheels shall be 150 mm and the diameter of the side wheels shall be 80 mm. The fabricator shall use appropriate washers and spacers to lock the inner bearing bushing to the axle. Wheels shall be similar or equal to the following:

a. 150 mm Dia. x 50 mm wide

b. 80 mm Dia. x 40 mm wide

2.1.7.2 Axles

The axle assembly shall be stainless steel and shall be eccentrically machined. A slotted adjustment cam plate shall be attached to the axle by welding as indicated on the drawings. Eccentric offset shall be a minimum of 6 mm. Diameter, tolerance and finish of the mating axle shaft shall be coordinated with the wheel manufacturer's diameters and tolerances for a close fit. Submit shop drawings showing all fits and tolerances. Material, weld, and nut shall all be a 300 series stainless steel.

2.2 FABRICATION

2.2.1 General

Material must be straight before being laid off or worked. If straightening is necessary it shall be done by methods that will not impair the metal. Sharp kinks or bends shall be cause for rejection of the material. Material with welds will not be accepted except where welding is definitely specified, indicated or otherwise approved. Bends shall be made by approved dies, press brakes or bending rolls. Where heating is required, precautions shall be taken to avoid overheating or warping the metal and it shall be allowed to cool in a manner that will not impair the original properties of the metal. Proposed flame cutting of material other than structural steel shall be subject to approval and shall be indicated on detail drawings. Shearing shall be accurate and all portions of the work shall be neatly finished. Corners shall be square and true unless otherwise shown on the drawings. Re-entrant cuts shall be filleted to a minimum radius of 20 mm unless otherwise approved. Finished members shall be free of twists, bends and open joints. Bolts, nuts and screws shall be tight.

2.2.2 Dimensional Tolerances

Dimensions shall be measured by a calibrated steel tape of approximately the same temperature as the material being measured. The overall dimensions of an assembled structural unit shall be within the tolerances indicated on the drawings or as specified in the particular section of these specifications for the item of work. Where tolerances are not specified in other sections of these specifications or shown, an allowable variation of 1 mm is permissible in the overall length of component members with both ends milled and component members without milled ends shall not deviate from the dimensions shown by not more than 1.5 mm for members 9 m or less in length and by more than 3 mm for members over 9 m in length.

2.2.3 Steel

Structural steel may be cut, when approved, by mechanically guided or hand-guided torches, provided an accurate profile with a surface that is smooth and free from cracks and notches is obtained. Surfaces and edges to be welded shall be prepared in accordance with AWS D1.1/D1.1M, Subsection 3.2. Where structural steel is not to be welded, chipping or grinding will not be required except as necessary to remove slag and sharp edges of mechanically guided or hand-guided cuts not exposed to view. Hand-guided cuts which are to be exposed or visible shall be chipped, ground or machined to sound metal.

2.2.4 Aluminum

Laying out and cutting of aluminum shall be in accordance with the AA ADM.

2.2.5 Bolted Connections

2.2.5.1 Bolted Steel Connections

Bolts, nuts and washers shall be of the type specified or indicated. Beveled washers shall be used where bearing faces have a slope of more than 1:20 with respect to a plane normal to the bolt axis. Bolt holes shall be accurately located, smooth, perpendicular to the member and cylindrical. Holes for Bolts shall be drilled or subdrilled and reamed in the shop and shall not be more than 1.5 mm larger than the diameter of the bolt unless otherwise approved, or as indicated on the drawings or specified below. Poor matching of holes will be cause for rejection. Drifting occurring during assembly shall not distort the metal or enlarge the holes. Reaming to a larger diameter of the next standard size bolt will be allowed for slight mismatching.

2.2.5.2 Bolted Aluminum Connections

Punching, drilling, reaming and bolting for bolted aluminum connections shall conform to the requirements of AA ADM.

2.3 MACHINE WORK

Tolerances, allowances and gauges for metal fits between plain, non-threaded, cylindrical parts shall conform to ASME B4.1 for the class of fit shown or required unless otherwise shown on approved detail drawings. Where fits are not shown they shall be suitable as approved. Tolerances for machine-finished surfaces designated by non-decimal

dimensions shall be within 0.4 mm, unless otherwise indicated on the drawings. Sufficient machining stock shall be allowed to ensure true surfaces of solid material. Assembled parts shall be accurately machined and all like parts shall be interchangeable. All drilled holes shall be accurately located.

2.3.1 Finished Surfaces

Surface finishes indicated or specified herein shall be in accordance with ASME B46.1. Values of required roughness heights are arithmetical average deviations expressed in microinches. These values are maximum. Lesser degrees will be satisfactory unless otherwise indicated. Compliance with surface requirements shall be determined by sense of feel and visual inspection of the work compared to Roughness Comparison Specimens in accordance with the provisions of ASME B46.1. Values of roughness width and waviness height shall be consistent with the general type of finish specified by roughness height. Where the finish is not indicated or specified it shall be that which is most suitable for the particular surface, provide the class of fit required and be indicated on the detail drawings by a symbol which conforms to ASME B46.1 when machine finishing is provided. Flaws such as scratches, ridges, holes, peaks, cracks or checks which will make the part unsuitable for the intended use will be cause for rejection.

2.3.2 Unfinished Surfaces

All work shall be laid out to secure proper matching of adjoining unfinished surfaces unless otherwise directed. Where there is a large discrepancy between adjoining unfinished surfaces they shall be chipped and ground smooth or machined to secure proper alignment. Unfinished surfaces shall be true to the lines and dimensions shown and shall be chipped or ground free of all projections and rough spots. Depressions or holes not affecting the strength or usefulness of the parts shall be filled in an approved manner.

2.4 WELDING

Submit the Welding Procedure Specification (WPS).

2.4.1 Welding of Structural Steel

Welding shall be in accordance with AWS D1.1/D1.1M. Welding procedures which are considered prequalified as specified in AWS D1.1/D1.1M will be accepted without further qualification. Submit for approval a listing or an annotated drawing to indicate the joints not prequalified. Procedure qualification shall be required for these joints.

2.4.2 Welding of Aluminum

Welding of aluminum shall conform to AA ADM or AWS D1.2/D1.2M, Sections 1 through 7, 9 and 10. The welding process and welding operators shall be prequalified as required by AWS D1.2/D1.2M, Section 5 or AA ADM in accordance with the methods described in ASME BPVC SEC IX, Section IX. Submit a certified report giving the results of the aluminum welding qualification tests. Also, submit a complete schedule of the welding process for each aluminum fabrication to be welded prior to commencing fabrication.

2.4.3 Welding Inspection

Maintain an approved inspection system and perform required inspections in accordance with Contract Clause CONTRACTOR INSPECTION SYSTEM. Welding shall be subject to inspection to determine conformance with the requirements of AWS D1.1/D1.1M, the approved welding procedures and provisions stated in other sections of these specifications.

2.4.3.1 Visual Examination

All completed welds shall be cleaned and carefully examined for insufficient throat or leg sizes, cracks, undercutting, overlap, excessive convexity or reinforcement and other surface defects to ensure compliance with the requirements of AWS D1.1/D1.1M, Section 3 and Section 9, Part D.

2.4.4 Steel Welding Repairs

Defective welds shall be repaired in accordance with AWS D1.1/D1.1M, Section 5. Defective weld metal shall be removed to sound metal by use of air carbon-arc or oxygen gouging. The surfaces shall be thoroughly cleaned before welding. Welds that have been repaired shall be retested by the same methods used in the original inspection. Costs for repairs and retesting shall be borne by the Contractor. Submit repair procedure prior to doing repair.

2.5 MISCELLANEOUS PROVISIONS

2.5.1 Metallic Coatings

Zinc Coatings. Zinc coatings shall be applied in a manner and of a thickness and quality conforming to ASTM A123/A123M. Where zinc coatings are destroyed by cutting, welding or other causes the affected areas shall be regalvanized. Coatings 2 ounces or heavier shall be regalvanized with a suitable low-melting zinc base alloy similar to the recommendations of the American Hot-Dip Galvanizers Association to the thickness and quality specified for the original zinc coating.

2.5.2 Cleaning of Stainless Steel

Oil, paint and other foreign substances shall be removed from stainless steel surfaces after fabrication. Cleaning shall be done by vapor degreasing or by the use of cleaners of the alkaline, emulsion or solvent type.

2.6 SHOP TESTING

2.6.1 Wheel Assembly Testing

The first wheel assembly shall be tested for correct fit and operation in the presence of the Contracting Officer unless otherwise waived in writing. The wheel shall rotate concentrically and smoothly on the bearings. The cam adjuster shall provide at least 3 mm of adjustment in each vertical direction. Waiving of tests will not relieve the Contractor of responsibility for any fault in operation, workmanship or material that occurs before the completion of the contract or guarantee.

2.6.2 Assembly Tests

Each rolling cover including the shell, carrier, frame, and temporary

brackets shall be assembled in the shop to determine the correctness of the fabrication and matching of the component parts. Tolerances shall not exceed those shown on the drawings. Each cover assembly shall be closely checked to ensure that all necessary clearances have been provided and that binding does not occur in any moving part. Assembly in the shop shall be done on a straight and level floor or platform, the frame shall be mounted on temporary supports in a level position. The carrier shall move smoothly and with minimal effort. Misalignment or poor operation, or defects disclosed shall be immediately remedied by the Contractor without cost to the Government. Assembly, testing, and disassembly work shall be performed in the presence of the Contracting Officer unless waived in writing. Provide ten working days notice, in writing, of the first and each proceeding rolling cover assembly to the Contracting Officer.

2.7 PREPARATION FOR SHIPPING

Before disassembly for shipment each rolling cover subassembly shall be match-mark stamped (or as otherwise approved) to facilitate correct reassembly in the field. The location of stampings shall be indicated by circling with a ring of white chalk after the shop finish has been applied or as otherwise directed. Each subassembly shall be wood crated, slatted, skid mounted, or otherwise packaged such that abrasion does not occur during shipment.

PART 3 EXECUTION

3.1 ASSEMBLY

All parts to be assembled shall be thoroughly cleaned. Packing compounds, rust, dirt, grit and other foreign matter shall be removed. Holes and grooves for lubrication shall be cleaned. Enclosed chambers or passages shall be examined to make sure that they are free from damaging materials. Where units or items are shipped as assemblies they will be inspected prior to installation. Pipe wrenches, cold chisels or other tools likely to cause damage to the surfaces of rods, nuts or other parts shall not be used for assembling and tightening parts. Bolts and screws shall be tightened firmly and uniformly but care shall be taken not to overstress the threads. When a half nut is used for locking a full nut the half nut shall be placed first and followed by the full nut. Threads of all bolts, nuts and screws shall be lubricated with a lubricant before assembly. Threads of corrosion-resisting steel bolts and nuts shall be coated with an approved antigalling compound. Driving and drifting bolts or keys will not be permitted.

3.2 PROTECTION OF FINISHED WORK

3.2.1 Lubrication After Assembly

After assembly all wheels shall be pressure lubricated or oiled.

3.2.2 Aluminum

Aluminum in contact with structural steel in the area of the cover shell fastener angle clips shall be protected against galvanic or corrosive action by being given a coat of zinc-chromate primer and a coat of aluminum paint.

3.3 ACCEPTANCE TESTING

The rolling cover shall be field tested to ensure proper wheel adjustments to eliminate binding and track misalignment. In addition, demonstrate to the Contracting Officer that the cover, and cover tracks are level. The rolling cover shall be rolled the full distance of the tracks. The test shall be repeated a sufficient number of times (minimum of three) to demonstrate proper operation. Misalignment or poor operation, or defects disclosed shall be immediately remedied without cost to the Government. Provide all personnel necessary to conduct the tests. Testing shall be performed in the presence of Contracting Officer. Notify the Contracting Officer, in writing, at least 7 days prior to testing operations.

-- End of Section --

THIS PAGE HAS BEEN INTENTIONALLY LEFT BLANK

SECTION 05 72 00

DECORATIVE METAL SPECIALTIES
02/12

PART 1 GENERAL

1.1 REFERENCES

The publications listed below form a part of this specification to the extent referenced. The publications are referred to within the text by the basic designation only.

ALUMINUM ASSOCIATION (AA)

AA ADM	(2015) Aluminum Design Manual
AA ASM-35	(2000) Specifications for Aluminum Sheet Metal Work in Building Construction, Construction Manual Series Section 5
AA DAF45	(2003; Reaffirmed 2009) Designation System for Aluminum Finishes
AA PK-1	(2009) Pink Sheets: Designations and Chemical Composition Limits for Aluminum Alloys in the Form of Castings & Ingot

AMERICAN WELDING SOCIETY (AWS)

AWS D1.2/D1.2M	(2014) Structural Welding Code - Aluminum

ASME INTERNATIONAL (ASME)

ASME B18.24	(2004; Addenda A 2006; R 2011) Part Identifying Number (PIN) Code System Standard for B18 Fastener Products

ASTM INTERNATIONAL (ASTM)

ASTM A123/A123M	(2013) Standard Specification for Zinc (Hot-Dip Galvanized) Coatings on Iron and Steel Products
ASTM A283/A283M	(2013) Standard Specification for Low and Intermediate Tensile Strength Carbon Steel Plates
ASTM B209M	(2014) Standard Specification for Aluminum and Aluminum-Alloy Sheet and Plate (Metric)
ASTM B211M	(2012; E 2012) Standard Specification for Aluminum and Aluminum-Alloy Bar, Rod, and Wire (Metric)
ASTM B221	(2014) Standard Specification for Aluminum and Aluminum-Alloy Extruded Bars, Rods, Wire, Profiles, and Tubes

ASTM B221M	(2013) Standard Specification for Aluminum and Aluminum-Alloy Extruded Bars, Rods, Wire, Profiles, and Tubes (Metric)
ASTM B316/B316M	(2010) Standard Specification for Aluminum and Aluminum-Alloy Rivet and Cold-Heading Wire and Rods
ASTM D1730	(2009; R 2014) Standard Practices for Preparation of Aluminum and Aluminum-Alloy Surfaces for Painting
ASTM G71	(1981; R 2014) Standard Guide for Conducting and Evaluating Galvanic Corrosion Tests in Electrolytes
ASTM G82	(1998; R 2014) Standard Guide for Development and Use of a Galvanic Series for Predicting Galvanic Corrosion Performance

SOCIETY FOR PROTECTIVE COATINGS (SSPC)

SSPC PS 11.01	(1982; E 2004) Black (or Dark Red) Coal Tar Epoxy Polyamide Painting System

1.2 SUBMITTALS

Government approval is required for submittals with a "G" designation; submittals not having a "G" designation are for Contractor Quality Control approval. Submittals with an "S" are for inclusion in the Sustainability Notebook, in conformance to Section 01 33 29 SUSTAINABILITY REPORTING. Submit the following in accordance with Section 01 33 00 SUBMITTAL PROCEDURES:

SD-02 Shop Drawings

Ornamental Metal Items; G

Installation Drawings; G

Shop and Field Connections; G

Construction Details; G

SD-03 Product Data

Materials; G

Fabrication; G

SD-04 Samples

Manufacturer's Standard Color Charts; G

Aluminum Finishes; G

Architectural Metal Items; G

1.3 QUALITY CONTROL

1.3.1 Color Charts

Submit Manufacturer's Standard Color Charts for Shop Paint and Finish Paint for approval by the Contracting Officer prior to work. Submit fabrication drawings for Ornamental Metal Items.

1.4 DELIVERY, STORAGE, AND HANDLING

Store all architectural metal items off the ground on clean raised platforms or pallets one level high in dry locations with adequate ventilation, such as an enclosed building or closed trailer.

Keep materials free from dirt and grease and protected from corrosion.

Store packaged materials in their original, unbroken containers in a dry area, until ready for installation.

PART 2 PRODUCTS

2.1 SYSTEM DESCRIPTION

Submit Installation Drawings for Ornamental Metal Items, Shop and Field Connections and Construction Details showing location, dimensions, size, and weight or gauge as applicable of each ornamental item; type and location of shop and field connections; and other pertinent construction and erection details. Show on drawings location and details of anchorage devices embedded in cast-in-place concrete and masonry construction.

2.2 MATERIALS

Submit manufacturer's catalog data for the following items listing all ornamental metal accessories including casting, forgings, fasteners and anchorage devices.

2.2.1 Prefabricated Aluminum Sun Shades

Provide pre-fabricated, factory finished, aluminum sun shades. Basis of design sunshades: "Supershade Sun Control Canopies" by Mapes Canopies, Lincoln, NE or equal. Fascias fabricated with 3mm thick aluminum in "J" profile 200mm high. Decking to consist of louvered blades of 2.8mm thick aluminum. Intermediate framing members, as required, to be of extruded aluminum. Support sun shades with hanger rods as recommended by the manufacturer. Size of units to be as indicated on the drawings. Finish of sunshades to be clear anodized aluminum. Hanger rods are to be powder coated. Units to be pre-assembled to the greatest extent possible.

2.2.2 Concrete Inserts

Provide slotted-type concrete inserts, hot-dip galvanized, pressed steel plate, welded construction, box-type, with slot to receive square head bolt and to provide lateral adjustment of the bolt. Length of insert body less anchorage lugs is a minimum of 115 mm. Provide inserts with knockout cover. Steel plate can not be less than 3 mm thick conforming to

ASTM A283/A283M, Grade C. Ensure inserts are hot-dip galvanized after fabrication in accordance with ASTM A123/A123M.

Provide concrete inserts which are non-removable when embedded in concrete of 20 Megapascal compressive strength and subjected to a 26.7 kilonewton tension load test in an axial direction. Concrete can not indicate any evidence of failure attributable to the anchoring device itself.

2.3 FABRICATION

2.3.1 Workmanship

Fabricate metalwork to the shape and size, with lines, angles, and curves true to form. Provide necessary rabbets, lugs, and brackets so that the work can be assembled. Conceal fasteners where practical.

Design exterior ornamental metal items to withstand expansion and contraction of the component parts at an ambient temperature of 50 degrees C without causing harmful buckling, opening of joints, overstressing of fasteners, or other harmful effects.

Welded fabrication to meet requirements as specified in AWS D1.2/D1.2M. Execute all welds behind finished surfaces without distortion or discoloration of the exposed side. Clean flux from welded joints and dress all exposed and contact surfaces.

Drill or punch holes for fasteners.

Mill all joints to a close fit. Cope or miter corner joints to a well formed shape and true alignment with the adjacent item. Fabricate and form joints exposed to weather to prevent water intrusion.

2.3.2 Aluminum-Alloy Extrusions

Provide aluminum fabrications conforming to AA ADM, AA ASM-35, and AA PK-1.

Provide 6063, temper T5 extrusions conforming to ASTM B221 ASTM B221M.

Provide aluminum-alloy and tempered extrusions recommended by the aluminum producer with the specified finish of integral-color anodized coating having mechanical properties equal to, or exceeding, those of aluminum alloy 6063, temper T5, conforming to ASTM B221 ASTM B221M.

2.3.3 Aluminum-Alloy Sheets and Plates

Provide aluminum-alloy and tempered sheets and plates recommended by the aluminum producer with the specified finish of integral-color anodized coating having mechanical properties equal to, or exceeding, those of alloy 5005, temper H16, conforming to ASTM B209M.

2.3.4 Metals for Fasteners

Provide fastener identification conforming to ASME B18.24.

Provide aluminum-alloy bolts and screws made from rod conforming to ASTM B211M, alloy 2024 and temper T351.

Provide aluminum-alloy nuts made from rod conforming to ASTM B211M, alloy

6061 and temper T6.

Provide aluminum-alloy washers made from sheet conforming to ASTM B209M, alloy 2024 and temper T4.

Provide aluminum-alloy rivets made from rod or wire conforming to ASTM B316/B316M, alloy 6053 and temper T61.

Provide corrosion-resistant steel fasteners made of chromium-nickel steel, AISI Type 303, with form and condition best suited for the application.

2.3.5 Protection of Aluminum from Dissimilar Materials

Protect aluminum surfaces that will come in contact with dissimilar metals, or masonry, concrete, or wood, with epoxy polyamide conforming to SSPC PS 11.01, and topcoated with aliphatic polyurethane conforming to ASTM G71 and ASTM G82

Prepare aluminum surfaces to be painted by the acid pickling method conforming to ASTM D1730, Type B, Method 2 or Method 3.

Apply paint to dry, clean surfaces by brush or spraying to provide a minimum dry-film thickness of 0.038 mm.

2.3.6 Aluminum Finishes

Submit samples for Aluminum Finishes, one for each type used in the project. Provide samples of standard size as used in construction. After approval, full-sized samples may be used in construction, provided each sample is clearly identified and its location recorded.

Provide a finish for exposed-to-view aluminum surfaces of architectural metal items conforming to AA DAF45 and finished as specified for each of the following items:

a. Satin finish Class II; clear anodized coating, medium satin directional textured mechanical finish and Architectural Class II 0.010 to 0.018 mm thick anodized coating producing natural aluminum color finish conforming to AA M32-A31, as specified in AA DAF45.

PART 3 EXECUTION

3.1 INSTALLATION

3.1.1 Anchorage Devices Embedded In Other Construction

Install decorative metal work in accordance with the approved shop drawings and descriptive data for each ornamental metal item, as specified.

Securely fasten decorative metal items plumb and true to horizontal and vertical lines and levels.

3.1.2 Holes for Other Work

Provide holes where indicated for securing other work to metal work.

3.1.3 Fastening to Construction-In-Place

Provide anchorage devices and fasteners where necessary for fastening

ornamental metal items to construction-in-place. Include threaded fasteners for concrete inserts embedded in cast-in-place concrete; masonry anchorage devices and threaded fasteners for solid masonry and concrete-in-place; toggle bolts for hollow masonry and stud partitions; through bolting for masonry and wood construction; lag bolts and wood screws for wood construction; and threaded fasteners for structural steel. Provide fastening as recommended by the manufacturer. Fastening to wood plugs in masonry or concrete-in-place is not permitted. Install sunshades per manufacturer's recommendations and instructions.

3.1.4 Cutting and Fitting

Perform required cutting, drilling, and fitting for the installation of ornamental metal work. Execute cutting, drilling, and fitting carefully; when required, fit in place work before fastening.

3.1.5 Threaded Connections

Countersink and provide flat bolt and screw heads where anchors are exposed to view, and tightly secure threaded connections so that the threads are entirely concealed by fitting, unless otherwise specified.

3.2 FIELD QUALITY CONTROL

3.2.1 Finished Ornamental Metal Work Requirements

Ornamental metal work will be rejected for any of the following deficiencies:

a. Finish of exposed-to-view aluminum surfaces having color and appearance that are outside the color and appearance range of the approved samples for aluminum finish.

b. Installed ornamental metal items having stained, discolored, abraded, or otherwise damaged exposed-to-view aluminum surfaces that cannot be removed by cleaning or repairing.

c. Aluminum surfaces in contact with dissimilar materials that are not protected as specified.

3.3 ADJUSTING AND CLEANING

Before final acceptance, wash exposed-to-view aluminum surfaces with clean water and soap and rinse with clean water. Do not use acid solutions, steel wool, or other harsh abrasives. Remove stains that remain after cleaning or restore the finish in accordance with the aluminum producer's recommendations

Perform all Preventative Maintenance and Inspection in accordance with the aluminum producer's recommended Cleaning Materials and Application Methods including precautions in the use of cleaning materials that maybe detrimental to the aluminum finish when improperly applied.

3.4 MAINTENANCE INSTRUCTIONS

Submit aluminum producer's recommended maintenance instructions for cleaning materials and application.

-- End of Section --

THIS PAGE HAS BEEN INTENTIONALLY LEFT BLANK

SECTION 06 41 16.00 10

LAMINATE CLAD ARCHITECTURAL CASEWORK
08/10

PART 1 GENERAL

1.1 REFERENCES

The publications listed below form a part of this specification to the extent referenced. The publications are referred to within the text by the basic designation only.

AMERICAN NATIONAL STANDARDS INSTITUTE (ANSI)

ANSI A161.2	(1998) Decorative Laminate Countertops, Performance Standards for Fabricated High Pressure

ARCHITECTURAL WOODWORK INSTITUTE (AWI)

AWI AWS	(2009) Architectural Woodwork Standards

ASTM INTERNATIONAL (ASTM)

ASTM D1037	(2012) Evaluating Properties of Wood-Base Fiber and Particle Panel Materials
ASTM F547	(2006; R 2012) Nails for Use with Wood and Wood-Base Materials

BUILDERS HARDWARE MANUFACTURERS ASSOCIATION (BHMA)

ANSI/BHMA A156.9	(2010) Cabinet Hardware

COMPOSITE PANEL ASSOCIATION (CPA)

CPA A208.1	(2009) Particleboard
CPA A208.2	(2009) Medium Density Fiberboard (MDF) for Interior Applications

NATIONAL ELECTRICAL MANUFACTURERS ASSOCIATION (NEMA)

ANSI/NEMA LD 3	(2005) Standard for High-Pressure Decorative Laminates

SCIENTIFIC CERTIFICATION SYSTEMS (SCS)

SCS	Scientific Certification Systems (SCS)Indoor Advantage

U.S. GREEN BUILDING COUNCIL (USGBC)

LEED BD+C	(2009; R 2010) Leadership in Energy and Environmental Design(tm) Building Design and Construction (LEED-NC)

UL ENVIRONMENT (ULE)

ULE Greenguard	UL Greenguard Certification Program

WINDOW AND DOOR MANUFACTURERS ASSOCIATION (WDMA)

ANSI/WDMA I.S.1A	(2013) Interior Architectural Wood Flush Doors

1.2 SYSTEM DESCRIPTION

Work in this section includes laminate clad custom casework cabinets as shown on the drawings and as described in this specification. This Section includes high-pressure laminate surfacing and cabinet hardware. Comply with EPA requirements in accordance with Section 01 33 29 SUSTAINABILITY REPORTING and LEED. All exposed and semi-exposed surfaces, whose finish is not otherwise noted on the drawings or finish schedule, shall be sanded smooth and shall receive a clear finish of polyurethane. Wood finish may be shop finished or field applied in accordance with Section 09 90 00 PAINTS AND COATINGS.

1.3 SUSTAINABILITY REPORTING

Materials in this technical specification may contribute towards contract compliance with sustainability requirements. See Section 01 33 29 SUSTAINABILITY REPORTING for project LEED BD+C low-emitting materials, recycled content, certified wood and LEED documentation requirements.

1.4 SUBMITTALS

Government approval is required for submittals with a "G" designation; submittals not having a "G" designation are for information only. When used, a designation following the "G" designation identifies the office that will review the submittal for the Government. Submittals with an "S" are for inclusion in the Sustainability Notebook, in conformance to Section 01 33 29 SUSTAINABILITY REPORTING. Submit the following in accordance with Section 01 33 00 SUBMITTAL PROCEDURES:

SD-02 Shop Drawings

Shop Drawings; G

SD-03 Product Data

Wood Materials; G
Finish Schedule; G
Certification; G

SD-04 Samples

Plastic Laminates; G
Cabinet Hardware; G

SD-07 Certificates

Quality Assurance; G
Laminate Clad Casework; G

SD-11 Closeout Submittals

LEED Documentation; S

1.5 QUALITY ASSURANCE

1.5.1 General Requirements

Unless otherwise noted on the drawings, all materials, construction methods, and fabrication shall conform to and comply with the custom grade quality standards as outlined in AWI AWS, Section for laminate clad cabinets. These standards shall apply in lieu of omissions or specific requirements in this specification. Contractors and their personnel engaged in the work shall be able to demonstrate successful experience with work of comparable extent, complexity and quality to that shown and specified. Submit a quality control statement which illustrates compliance with and understanding of AWI AWS requirements, in general, and the specific AWI AWS requirements provided in this specification. The quality control statement shall also certify a minimum of ten years Contractor's experience in laminate clad casework fabrication and construction. The quality control statement shall provide a list of a minimum of five successfully completed projects of a similar scope, size, and complexity.

1.5.2 Sustainable Design Certification

Product shall be third party certified in accordance with ULE Greenguard Gold, SCS Scientific Certification Systems Indoor Advantage Gold or equal. Certification shall be performed annually and shall be current.

1.6 DELIVERY, STORAGE, AND HANDLING

Casework may be delivered knockdown or fully assembled. Deliver all units to the site in undamaged condition, stored off the ground in fully enclosed areas, and protected from damage. The storage area shall be well ventilated and not subject to extreme changes in temperature or humidity.

1.7 SEQUENCING AND SCHEDULING

Coordinate work with other trades. Units shall not be installed in any room or space until painting, and ceiling installation are complete within the room where the units are located. Floor cabinets shall be installed before finished flooring materials are installed.

PART 2 PRODUCTS

2.1 WOOD MATERIALS

2.1.1 Lumber

a. All framing lumber shall be kiln-dried Grade III to dimensions as shown on the drawings. Frame front, where indicated on the drawings, shall be nominal 19 mm hardwood.

2.1.2 Panel Products

2.1.2.1 Plywood

All plywood panels used for framing purposes shall be veneer core hardwood

plywood, AWI AWS Grade AA. Nominal thickness of plywood panels shall be as indicated in this specification and on the drawings.

2.1.2.2 Particleboard

All particleboard shall be industrial grade, medium density (640 to 800 kg per cubic meter), 19 mm thick. A moisture-resistant particleboard in grade Type 2-M-2 or 2-M-3 shall be used as the substrate for plastic laminate covered components as located on the drawings and other areas subjected to moisture. Particleboard shall meet the minimum standards listed in ASTM D1037 and CPA A208.1.

2.1.2.3 Medium Density Fiberboard

Medium density fiberboard (MDF) shall be an acceptable panel substrate where noted on the drawings. Medium density fiberboard shall meet the minimum standards listed in CPA A208.2.

2.2 SOLID POLYMER MATERIAL

Solid surfacing casework components shall conform to the requirements of Section 06 61 16 SOLID POLYMER (SOLID SURFACING) FABRICATIONS.

2.3 HIGH PRESSURE DECORATIVE LAMINATE (HPDL)

All plastic laminates shall meet the requirements of ANSI/NEMA LD 3 and ANSI A161.2 for high-pressure decorative laminates. Design, colors, surface finish and texture, and locations shall be as indicated on the drawings. Submit two samples of each plastic laminate pattern and color. Samples shall be a minimum of 120 by 170 mm in size. Plastic laminate types and nominal minimum thicknesses for casework components shall be as indicated in the following paragraphs.

2.3.1 Horizontal General Purpose Standard (HGS) Grade

Horizontal general purpose standard grade plastic laminate shall be 1.22 mm (plus or minus 0.127 mm) in thickness. This laminate grade is intended for horizontal surfaces where postforming is not required.

2.3.2 Vertical General Purpose Standard (VGS) Grade

Vertical general purpose standard grade plastic laminate shall be 0.71 mm (plus or minus 0.012 mm) in thickness. This laminate grade is intended for exposed exterior vertical surfaces of casework components where postforming is not required.

2.3.3 Cabinet Liner Standard (CLS) Grade

Cabinet liner standard grade plastic laminate shall be 0.51 mm in thickness. This laminate grade is intended for light duty semi-exposed interior surfaces of casework components.

2.3.4 Backing Sheet (BK) Grade

Undecorated backing sheet grade laminate is formulated specifically to be used on the backside of plastic laminated panel substrates to enhance dimensional stability of the substrate. Backing sheet thickness shall be 0.51 mm. Backing sheets shall be provided for all laminated casework components where plastic laminate finish is applied to only one surface of

the component substrate.

2.4 THERMOSET DECORATIVE OVERLAYS (MELAMINE)

Thermoset decorative overlays (melamine panels) shall be used for casework cabinet interior, drawer interior surfaces.

2.5 EDGE BANDING

Edge banding for casework doors and drawer fronts shall be PVC vinyl and shall be 0.5 mm thick. Material width shall be 23.8 mm. Color and pattern shall match exposed door and drawer front laminate pattern and color.

2.6 CABINET HARDWARE

All hardware shall conform to ANSI/BHMA A156.9, unless otherwise noted, and shall consist of the following components:

2.6.1 Door Hinges

European type, BHMA No. ANSI/BHMA A156.9, B01602, 100 degrees of opening, self closing..

2.6.2 Cabinet Pulls

Back mounted, solid metal, 135 mm long, and 8 mm diameter wire pulls.

2.6.3 Drawer Slide

Side mounted heavy duty type, BHMA No. ANSI/BHMA A156.9 and B05091 with full extension and a minimum 34 kg load capacity. Slides shall include an integral stop to avoid accidental drawer removal.

2.6.4 Adjustable Shelf Support System

Multiple holes with metal pin supports.

2.7 FASTENERS

Nails, screws, and other suitable fasteners shall be the size and type best suited for the purpose and shall conform to ASTM F547 where applicable.

2.8 ADHESIVES, CAULKS, AND SEALANTS

2.8.1 Adhesives

Adhesives shall be of a formula and type recommended by AWI. Adhesives shall be selected for their ability to provide a durable, permanent bond and shall take into consideration such factors as materials to be bonded, expansion and contraction, bond strength, fire rating, and moisture resistance. Adhesives shall meet LEED requirements regarding VOC emissions and off-gassing.

2.8.1.1 Wood Joinery

Adhesives used to bond wood members shall be a Type II for interior use . Adhesives shall withstand a bond test as described in ANSI/WDMA I.S.1A.

2.8.1.2 Laminate Adhesive

Adhesive used to join high-pressure decorative laminate to wood shall be a water-based contact adhesive. PVC edgebanding shall be adhered using a polymer-based hot melt glue.

2.8.2 Caulk

Caulk used to fill voids and joints between laminated components and between laminated components and adjacent surfaces shall be clear, 100 percent silicone.

2.8.3 Sealant

Sealant shall be of a type and composition recommended by the substrate manufacturer to provide a moisture barrier at sink cutouts and all other locations where unfinished substrate edges may be subjected to moisture.

2.9 ACCESSORIES

2.10 FABRICATION

Verify field measurements as indicated in the shop drawings before fabrication. Fabrication and assembly of components shall be accomplished at the shop site to the maximum extent possible. Construction and fabrication of cabinets and their components shall meet or exceed the requirements for AWI custom grade unless otherwise indicated in this specification. Cabinet style, in accordance with AWI AWS, Section 400-G descriptions, shall be flush overlay.

2.10.1 Base and Wall Cabinet Case Body

2.10.1.1 Cabinet Components

Frame members shall be glued-together, kiln-dried hardwood lumber. Top corners, bottom corners, and cabinet bottoms shall be braced with either hardwood blocks or water-resistant glue and nailed in place metal or plastic corner braces. Cabinet components shall be constructed from the following materials and thicknesses:

2.10.1.1.1 Body Members (Ends, Divisions, Bottoms, and Tops)

19 mm medium density fiberboard (MDF) panel product

2.10.1.1.2 Face Frames and Rails

19 mm panel product

2.10.1.1.3 Shelving

19 mm medium density fiberboard (MDF) panel product

2.10.1.1.4 Cabinet Backs

6 mm particleboard panel product

2.10.1.1.5 Drawer Sides, Backs, and Subfronts

13 mm panel product

2.10.1.1.6 Drawer Bottoms

6 mm medium density fiberboard (MDF) panel product

2.10.1.1.7 Door and Drawer Fronts

19 mm medium density fiberboard (MDF)

2.10.1.2 Joinery Method for Case Body Members

2.10.1.2.1 Tops, Exposed Ends, and Bottoms

a. Doweled, glued under pressure (approx. 4 dowels per 300 mm of joint).

2.10.1.2.2 Exposed End Corner and Face Frame Attachment

2.10.1.2.2.1 Mitered Joint

lock miter or spline or biscuit, glued under pressure (no visible fasteners)

2.10.1.2.2.2 Non-Mitered Joint (90 degree)

butt joint glued under pressure (no visible fasteners)

2.10.1.2.2.3 Butt Joint

glued and nailed

2.10.1.2.3 Cabinet Backs (Wall Hung Cabinets)

Wall hung cabinet backs must not be relied upon to support the full weight of the cabinet and its anticipated load for hanging/mounting purposes. Method of back joinery and hanging/mounting mechanisms should transfer the load to case body members. Fabrication method shall be:

2.10.1.2.3.1 Full Bound

Full bound, captured in grooves on cabinet sides, top, and bottom. Cabinet backs for floor standing cabinets shall be side bound, captured in grooves; glued and fastened to top and bottom.

2.10.1.2.4 Cabinet Backs (Floor Standing Cabinets)

2.10.1.2.4.1 Side Bound

Side bound, captured in grooves; glued and fastened to top and bottom.

2.10.1.2.5 Wall Anchor Strips

Wall Anchor Strips shall be required for all cabinets with backs less than

13 mm thick. Strips shall consist of minimum 13 mm thick lumber, minimum 60 mm width; securely attached to wall side of cabinet back - top and bottom for wall hung cabinets, top only for floor standing cabinets.

2.10.2 Cabinet Floor Base

Floor cabinets shall be mounted on a base constructed of particleboard. Base assembly components shall be a moisture-resistant panel product. Finished height for each cabinet base shall be as indicated on the drawings. Bottom edge of the cabinet door or drawer face shall be flush with top of base.

2.10.3 Cabinet Door and Drawer Fronts

Door and drawer fronts shall be fabricated from medium density fiberboard (MDF. All door and drawer front edges shall be surfaced with PVC edgebanding, color and pattern to match exterior face laminate.

2.10.4 Drawer Assembly

2.10.4.1 Drawer Components

Drawer components shall consist of a removable drawer front, sides, backs, and bottom. Drawer components shall be constructed of the following materials and thicknesses:

2.10.4.1.1 Drawer Sides and Back For Thermoset Decorative Overlay (Melamine) Finish

13 mm thick medium density particleboard or MDF fiberboard substrate

2.10.4.1.2 Drawer Bottom

6 mm thick thermoset decorative overlay melamine panel product

2.10.4.2 Drawer Assembly Joinery Method

a. Bottoms shall be set into sides, front, and back, 6 mm deep groove with a minimum 9 mm standing shoulder.

2.10.5 Shelving

2.10.5.1 General Requirements

Shelving shall be fabricated from 19 mm medium density fiberboard (MDF) . All shelving top and bottom surfaces shall be finished with thermoset decorative overlay (melamine). Shelf edges shall be finished in a PVC edgebanding.

2.10.5.2 Shelf Support System

The shelf support system shall be:

2.10.5.2.1 Pin Hole Method

Drill holes on the interior surface of the cabinet side walls. Evenly space holes in two vertical columns Space the holes in each column at 25 mm increments starting 150 mm from the cabinet interior bottom and

extending to within 150 mm of the top interior surface of the cabinet. Drill holes to provide a level, stable surface when the shelf is resting on the shelf pins. Coordinate hole diameter with pin insert size to provide a firm, tight fit.

2.10.6 Laminate Application

Laminate application to substrates shall follow the recommended procedures and instructions of the laminate manufacturer and ANSI/NEMA LD 3, using tools and devices specifically designed for laminate fabrication and application. Provide a balanced backer sheet (Grade BK) wherever only one surface of the component substrate requires a plastic laminate finish. Apply required grade of laminate in full uninterrupted sheets consistent with manufactured sizes using one piece for full length only, using adhesives specified herein or as recommended by the manufacturer. Fit corners and joints hairline. All laminate edges shall be machined flush, filed, sanded, or buffed to remove machine marks and eased (sharp corners removed). Clean up at easing shall be such that no overlap of the member eased is visible. Fabrication shall conform to ANSI A161.2. Laminate types and grades for component surfaces shall be as follows unless otherwise indicated on the drawings:

2.10.6.1 Base/Wall Cabinet Case Body

a. Exterior (exposed) surfaces to include exposed and semi-exposed face frame surfaces: HPDL Grade VGS.

b. Interior (semi-exposed) surfaces to include interior back wall, bottom, and side walls: HPDL Grade CLS .

2.10.6.2 Adjustable Shelving

2.10.6.2.1 Top and Bottom Surfaces

Thermoset Decorative Overlay (melamine)

2.10.6.2.2 All Edges

HPDL Grade VGS

2.10.6.3 Fixed Shelving

2.10.6.3.1 Top and Bottom Surfaces

Thermoset Decorative Overlay (melamine)

2.10.6.3.2 Exposed Edges

PVC edgebanding

2.10.6.4 Door, Drawer Fronts, Access Panels

2.10.6.4.1 Exterior (Exposed) and Interior (Semi-Exposed) Faces

HPDL Grade VGS

2.10.6.4.2 Edges

PVC edgebanding

2.10.6.5 Drawer Assembly

All interior and exterior surfaces: Thermoset Decorative Overlay (melamine).

2.10.6.6 Tolerances

Flushness, flatness, and joint tolerances of laminated surfaces shall meet the AWI AWS custom grade requirements.

2.10.7 Finishing

2.10.7.1 Filling

No fasteners shall be exposed on laminated surfaces. All nails, screws, and other fasteners in non-laminated cabinet components shall be countersunk and the holes filled with wood filler consistent in color with the wood species.

2.10.7.2 Sanding

All surfaces requiring coatings shall be prepared by sanding with a grit and in a manner that scratches will not show in the final system.

PART 3 EXECUTION

3.1 INSTALLATION

Installation shall comply with applicable requirements for AWI AWS custom quality standards. Countertops and fabricated assemblies shall be installed level, plumb, and true to line, in locations shown on the drawings. Cabinets and other laminate clad casework assemblies shall be attached and anchored securely to the floor and walls with mechanical fasteners that are appropriate for the wall and floor construction.

3.1.1 Anchoring Systems

3.1.1.1 Floor

Base cabinets shall utilize a floor anchoring system. Anchoring and mechanical fasteners shall not be visible from the finished side of the casework assembly. Cabinet assemblies shall be attached to anchored bases without visible fasteners . Where assembly abuts a wall surface, anchoring shall include a minimum 13 mm thick lumber or panel product hanging strip, minimum 60 mm width; securely attached to the top of the wall side of the cabinet back.

3.1.1.2 Wall

Cabinet to be wall mounted shall utilize minimum 13 mm thick lumber or panel product hanging strips, minimum 60 mm width; securely attached to the wall side of the cabinet back, both top and bottom.

3.1.2 Hardware

Casework hardware shall be installed in types and locations as indicated on the drawings. Where fully concealed European-style hinges are specified to be used with particleboard or fiberboard doors, the use of plastic or synthetic insertion dowels shall be used to receive 5 mm

"Euroscrews". The use of wood screws without insertion dowels is prohibited.

3.1.3 Doors, Drawers and Removable Panels

The fitting of doors, drawers and removable panels shall be accomplished within target fitting tolerances for gaps and flushness in accordance with AWI AWS custom grade requirements.

3.1.4 Plumbing Fixtures

Install sinks, sink hardware, and other plumbing fixtures in locations as indicated on the drawings and in accordance with Section 22 00 00 PLUMBING, GENERAL PURPOSE.

-- End of Section --

THIS PAGE HAS BEEN INTENTIONALLY LEFT BLANK

SECTION 06 61 16

SOLID POLYMER (SOLID SURFACING) FABRICATIONS
08/10

PART 1 GENERAL

1.1 REFERENCES

The publications listed below form a part of this specification to the extent referenced. The publications are referred to within the text by the basic designation only.

ASTM INTERNATIONAL (ASTM)

ASTM D2583	(2013a) Indentation Hardness of Rigid Plastics by Means of a Barcol Impressor
ASTM D5116	(2010) Standard Guide for Small-Scale Environmental Chamber Determinations of Organic Emissions from Indoor Materials/Products
ASTM D570	(1998; E 2010; R 2010) Standard Test Method for Water Absorption of Plastics
ASTM D638	(2010) Standard Test Method for Tensile Properties of Plastics
ASTM D696	(2008; E 2013) Standard Test Method for Coefficient of Linear Thermal Expansion of Plastics Between -30 degrees C and 30 degrees C With a Vitreous Silica Dilatometer
ASTM E84	(2014) Standard Test Method for Surface Burning Characteristics of Building Materials
ASTM G21	(2013) Determining Resistance of Synthetic Polymeric Materials to Fungi

CSA GROUP (CSA)

CSA B45.5-11/IAPMO Z124	(2011; Update 1 2012) Plastic Plumbing Fixtures - First Edition

NATIONAL ELECTRICAL MANUFACTURERS ASSOCIATION (NEMA)

ANSI/NEMA LD 3	(2005) Standard for High-Pressure Decorative Laminates

NSF INTERNATIONAL (NSF)

NSF/ANSI 51	(2012) Food Equipment Materials

SCIENTIFIC CERTIFICATION SYSTEMS (SCS)

SCS	Scientific Certification Systems (SCS)Indoor Advantage

TILE COUNCIL OF NORTH AMERICA (TCNA)

TCNA Hdbk	(2013) Handbook for Ceramic, Glass, and Stone Tile Installation

U.S. GREEN BUILDING COUNCIL (USGBC)

LEED BD+C	(2009; R 2010) Leadership in Energy and Environmental Design(tm) Building Design and Construction (LEED-NC)

UL ENVIRONMENT (ULE)

ULE Greenguard	UL Greenguard Certification Program

1.2 SYSTEM DESCRIPTION

a. Work under this section includes counter tops and window sills and other items utilizing solid polymer (solid surfacing) fabrication as shown on the drawings and as described in this specification. Do not change source of supply for materials after work has started, if the appearance of finished work would be affected.

b. In most instances, installation of solid polymer fabricated components and assemblies will require strong, correctly located structural support provided by other trades. To provide a stable, sound, secure installation, close coordination is required between the solid polymer fabricator/installer and other trades to ensure that necessary structural wall support, cabinet counter top structural support, proper clearances, and other supporting components are provided for the installation of wall panels, countertops, shelving, and all other solid polymer fabrications to the degree and extent recommended by the solid polymer manufacturer.

c. Appropriate staging areas for solid polymer fabrications. Allow variation in component size and location of openings of plus or minus 3 mm.

1.3 SUSTAINABILITY REPORTING

Materials in this technical specification may contribute towards contract compliance with sustainability requirements. See Section 01 33 29 SUSTAINABILITY REPORTING for project LEED BD+C ,recycled content and LEED documentation requirements.

1.4 SUBMITTALS

Government approval is required for submittals with a "G" designation; submittals not having a "G" designation are for Contractor Quality Control approval. Submittals with an "S" are for inclusion in the Sustainability Notebook, in conformance to Section 01 33 29 SUSTAINABILITY REPORTING. Submit the following in accordance with Section 01 33 00 SUBMITTAL PROCEDURES:

SD-02 Shop Drawings

Detail Drawings; G
Installation; G

SD-03 Product Data

Solid polymer material; G

Certification; G
VOC Content; G

SD-04 Samples

Material; G
Counter and Vanity Tops; G

SD-10 Operation and Maintenance Data

Clean-up; G

SD-11 Closeout Submittals

LEED Documentation; S

1.5 QUALITY ASSURANCE

1.5.1 Qualifications

To ensure warranty coverage, solid polymer fabricators shall be certified to fabricate by the solid polymer material manufacturer being utilized. Mark all fabrications with the fabricator's certification label affixed in an inconspicuous location. Fabricators shall have a minimum of 5 years of experience working with solid polymer materials. Submit solid polymer manufacturer's certification attesting to fabricator qualification approval.

1.5.2 Mock-ups

Submit Detail Drawings indicating locations, dimensions, component sizes, fabrication and joint details, attachment provisions, installation details, and coordination requirements with adjacent work.1.5.3 Sustainable Design Certification

Product shall be third party certified in accordance with ULE Greenguard Gold, SCS Scientific Certification Systems Indoor Advantage Gold or equal. VOC content and emissions shall be determined by ASTM D5116. Certification shall be performed annually and shall be current.

1.6 DELIVERY, STORAGE, AND HANDLING

Do not deliver materials to project site until areas are ready for installation. Deliver components and materials to the site undamaged, in containers clearly marked and labeled with manufacturer's name. Materials shall be stored indoors and adequate precautions taken to prevent damage to finished surfaces. Provide protective coverings to prevent physical damage or staining following installation, for duration of project.

1.7 WARRANTY

Provide manufacturer's warranty of ten years against defects in materials, excluding damages caused by physical or chemical abuse or excessive heat. Warranty shall provide for material and labor for replacement or repair of defective material for a period of ten years after component installation.

PART 2 PRODUCTS

2.1 MATERIAL

Provide solid polymer material that is a homogeneous filled solid polymer; not coated, laminated or of a composite construction; meeting CSA B45.5-11/IAPMO Z124 requirements. Material shall have minimum physical and performance properties specified. Superficial damage to a depth of 0.25 mm shall be repairable by sanding or polishing. Material thickness shall be as indicated on the drawings. In no case shall material be less than 6 mm in thickness. Submit a minimum 100 by 100 mm sample of each color and pattern for approval. Samples shall indicate full range of color and pattern variation. Approved samples shall be retained as a standard for this work. Submit test report results from an independent testing laboratory attesting that the submitted solid polymer material meets or exceeds each of the specified performance requirements.

2.1.1 Cast, 100 Percent Acrylic Polymer Solid Surfacing Material

Cast, 100 percent acrylic solid polymer material shall be composed of acrylic polymer, mineral fillers, and pigments and shall meet the following minimum performance requirements:

PROPERTY	REQUIREMENT (min. or max.)	TEST PROCEDURE
Tensile Strength	291 kg/cm^2 (max.)	ASTM D638
Hardness	55-Barcol Impressor (min.)	ASTM D2583
Thermal Expansion	.0000386cm/cm/deg C (max.)	ASTM D696
Boiling Water Surface Resistance	No Change	ANSI/NEMA LD 3-3.05
High Temperature Resistance	No Change	ANSI/NEMA LD 3-3.06
Impact Resistance (Ball drop)		ANSI/NEMA LD 3-303
6.4 mm sheet	910 mm, 227 g ball, no failure	
12.7 mm sheet	3550 mm, 227 g ball, no failure	
19 mm sheet	5070 mm, 227 g ball, no failure	

PROPERTY	REQUIREMENT (min. or max.)	TEST PROCEDURE
Mold & Mildew Growth	No growth	ASTM G21
Bacteria Growth	No growth	ASTM G21
Liquid Absorption (Weight in 24 hrs.)	0.1 percent max.	ASTM D570
Flammability		ASTM E84
Flame Spread	25 max.	
Smoke Developed	30 max.	
Sanitation	"Food Contact" approval	NSF/ANSI 51

2.1.2 Material Patterns and Colors

Patterns and colors for all solid polymer components and fabrications shall be those indicated on the project drawings. Pattern and color shall occur, and shall be consistent in appearance, throughout the entire depth (thickness) of the solid polymer material.

2.1.3 Surface Finish

Exposed finished surfaces and edges shall receive a uniform appearance. Exposed surface finish shall be matte; gloss rating of 5-20.

2.2 ACCESSORY PRODUCTS

Accessory products, as specified below, shall be manufactured by the solid polymer manufacturer or shall be products approved by the solid polymer manufacturer for use with the solid polymer materials being specified.

2.2.1 Seam Adhesive

Seam adhesive shall be a two-part adhesive kit to create permanent, inconspicuous, non-porous, hard seams and joints by chemical bond between solid polymer materials and components to create a monolithic appearance of the fabrication. Adhesive shall be approved by the solid polymer manufacturer. Adhesive shall be color-matched to the surfaces being bonded where solid-colored, solid polymer materials are being bonded together. The seam adhesive shall be clear or color matched where particulate patterned, solid polymer materials are being bonded together.

2.2.2 Panel Adhesive

Panel adhesive shall be neoprene based panel adhesive meeting TCNA Hdbk, Underwriter's Laboratories (UL) listed. Use this adhesive to bond solid polymer components to adjacent and underlying substrates.

2.2.3 Silicone Sealant

Sealant shall be a mildew-resistant, FDA and OSHA Nationally Recognized Testing Laboratory (NRTL) listed silicone sealant or caulk in a clear formulation. The silicone sealant shall be approved for use by the solid

polymer manufacturer. Use sealant to seal all expansion joints between solid polymer components and all joints between solid polymer components and other adjacent surfaces such as walls, floors, ceiling, and plumbing fixtures.

2.2.4 Conductive Tape

Conductive tape shall be manufacturer's standard foil tape, 0.1 mm thick, applied around the edges of cut outs containing hot or cold appliances.

2.2.5 Mounting Hardware

Provide mounting hardware, including sink/bowl clips, inserts and fasteners for attachment of undermount sinks and lavatories.

2.3 FABRICATIONS

Components shall be factory or shop fabricated to sizes and shapes indicated, to the greatest extent practical, in accordance with approved Shop Drawings and manufacturer's requirements. Provide factory cutouts for sinks, lavatories, and plumbing fixtures where indicated on the drawings. Contours and radii shall be routed to template, with edges smooth. Defective and inaccurate work will be rejected. Submit product data indicating product description, fabrication information, and compliance with specified performance requirements for solid polymer, joint adhesive, sealants, and heat reflective tape. Both the manufacturer of materials and the fabricator shall submit a detailed description of operations and processes in place that support efficient use of natural resources, energy efficiency, emissions of ozone depleting chemicals, management of water and operational waste, indoor environmental quality, and other production techniques supporting sustainable design and products.

2.3.1 Joints and Seams

Form joints and seams between solid polymer components using manufacturer's approved seam adhesive. Joints shall be inconspicuous in appearance and without voids to create a monolithic appearance.

2.3.2 Edge Finishing

Rout and finish component edges to a smooth, uniform appearance and finish. Edge shapes and treatments, including any inserts, shall be as detailed on the drawings. Rout all cutouts, then sand all edges smooth. Repair or reject defective or inaccurate work.

2.3.3 Counter and Vanity Top Splashes

Fabricate backsplashes and end splashes from 13 mm thick solid surfacing material to be 100 mm high. Backsplashes and end splashes shall be provided for all counter tops and vanity tops. Backsplashes shall be shop fabricated and be permanently attached.

2.3.3.1 Permanently Attached Backsplash

Permanently attached backsplashes shall be attached straight with seam adhesive to form a 90 degree transition.

2.3.3.2 End Splashes

End splashes shall be provided loose for installation at the jobsite after horizontal surfaces to which they are to be attached have been installed.

2.3.4 Window Stools

Fabricate window stools from 13 mm thick solid surfacing, solid polymer material. Dimensions, edge shape, and other details shall be as indicated on the drawings.

2.3.5 Counter and Vanity Tops

Fabricate all solid surfacing, solid polymer counter top and vanity top components from 13 mm thick material. Edge details, dimensions, locations, and quantities shall be as indicated on the Drawings. Counter tops shall be complete with 100 mm high permanently attached, 90 degree transition and loose endsplashes at all locations . Attach 50 mm wide reinforcing strip of polymer material under each horizontal counter top seam. Submit a minimum 300 mm wide by 150 mm deep, full size sample for each type of counter top shown on the project drawings. The sample shall include the edge profile and backsplash as detailed on the project drawings. Solid polymer material shall be of a pattern and color as indicated on the drawings.

2.3.5.1 Counter Top With Sink

a. Stainless Steel Sink. Countertops with sinks shall include cutouts to template as furnished by the sink manufacturer. Manufacturer's standard sink mounting hardware for stainless steel installation shall be provided. Seam between sink and counter top shall be sealed with silicone sealant. Sink, faucet, and plumbing requirements shall be in accordance with Section 22 00 00 PLUMBING,GENERAL PURPOSE.

b. Solid polymer sinks shall be a manufacturer's standard, pre-molded product specifically designed for attachment to solid polymer counter tops.

2.3.6 Tub/Shower Wall Panel System

Tub/shower wall enclosures shall provide a system of solid polymer components to include: panels, corner trim, soap dish and panel edge trim. Dimensions of all components shall be as indicated on the drawings. Panels shall be formed from manufacturer's standard 6 mm thick sheet product. Panels shall be full width and height with seams occurring only at the inside corners of the enclosure. Soap dish and shampoo shelf shall be of a configuration, shape, and location as standard with the manufacturer's system.

PART 3 EXECUTION

3.1 INSTALLATION

3.1.1 Components

Install all components and fabricated units plumb, level, and rigid. Make field joints between solid polymer components using solid polymer manufacturer's approved seam adhesives, to provide a monolithic appearance with joints inconspicuous in the finished work. Attach metal or vitreous

china sinks and lavatory bowls to counter tops using solid polymer manufacturer's recommended clear silicone sealant and mounting hardware. Solid polymer sinks and bowls shall be installed using a color-matched seam adhesive. Plumbing connections to sinks and lavatories shall be made in accordance with Section 22 00 00 PLUMBING, GENERAL PURPOSE .

3.1.1.1 Loose Counter Top Splashes

Mount loose splashes in the locations noted on the drawings. Loose splashes shall be adhered to the counter top with a color matched silicone sealant when the solid polymer components are solid colors. Use a clear silicone sealant to provide adhesion of particulate patterned solid polymer splashes to counter tops.

3.1.1.2 Wall Panels & Panel Systems

Installation of wall panels and system components to substrates shall include the use of a neoprene-based panel adhesive. Use seam adhesive to adhere all solid polymer components to each other with the exception of expansion joints and inside corners. All inside corners and expansion joints between solid polymer components shall be joined with silicone sealant. All joints between solid polymer components and non-solid polymer surfaces shall be sealed with a clear silicone sealant.

3.1.2 Silicone Sealant

Use a clear, silicone sealant or caulk to seal all expansion joints between solid polymer components and all joints between solid polymer components and other adjacent surfaces such as walls, floors, ceiling, and plumbing fixtures. Sealant bead shall be smooth and uniform in appearance and shall be the minimum size necessary to bridge any gaps between the solid surfacing material and the adjacent surface. Bead shall be continuous and run the entire length of the joint being sealed.

3.1.3 Plumbing

Make plumbing connections to sinks and lavatories in accordance with Section 22 00 00 PLUMBING, GENERAL PURPOSE.

3.2 CLEAN-UP

Components shall be cleaned after installation and covered to protect against damage during completion of the remaining project items. Components damaged after installation by other trades will be repaired or replaced at the General Contractor's cost. Component supplier will provide a repair/replace cost estimate to the General Contractor who shall approve estimate before repairs are made. Submit a minimum of six copies of maintenance data indicating manufacturer's care, repair and cleaning instructions. Maintenance video shall be provided,if available. Maintenance kit for matte finishes shall be submitted.

-- End of Section --

SECTION 07 12 00

BUILT-UP BITUMINOUS WATERPROOFING
04/06

PART 1 GENERAL

1.1 REFERENCES

The publications listed below form a part of this specification to the extent referenced. The publications are referred to within the text by the basic designation only.

ASTM INTERNATIONAL (ASTM)

ASTM C208	(2012) Cellulosic Fiber Insulating Board
ASTM C726	(2012) Mineral Fiber Roof Insulation Board
ASTM D1668/D1668M	(1997a; R 2014; E 2014) Glass Fabrics (Woven and Treated) for Roofing and Waterproofing
ASTM D173/D173M	(2003; R 2011; E 2012) Bitumen-Saturated Cotton Fabrics Used in Roofing and Waterproofing
ASTM D2178/D2178M	(2014) Asphalt Glass Felt Used in Roofing and Waterproofing
ASTM D41/D41M	(2011) Asphalt Primer Used in Roofing, Dampproofing, and Waterproofing
ASTM D449/D449M	(2003; R 2014; E 2014) Asphalt Used in Dampproofing and Waterproofing
ASTM D4586/D4586M	(2007; E 2012; R 2012) Asphalt Roof Cement, Asbestos-Free
ASTM D517	(1998; R 2008) Asphalt Plank

1.2 SUBMITTALS

Government approval is required for submittals with a "G" designation; submittals not having a "G" designation are for Contractor Quality Control approval. Submittals with an "S" are for inclusion in the Sustainability Notebook, in conformance to Section 01 33 29 SUSTAINABILITY REPORTING. Submit the following in accordance with Section 01 33 00 SUBMITTAL PROCEDURES:

SD-03 Product Data

Protection board

Membrane fabric

Reinforcing Fabric

SD-08 Manufacturer's Instructions

Application

1.3 ENVIRONMENTAL CONDITIONS

Apply the primers and waterproofing specified herein when the ambient temperature is above 4 degrees C.

1.4 DELIVERY AND STORAGE

1.4.1 Packaged Materials

Deliver materials in bundles, rolls, and sealed containers bearing the manufacturer's original labels. Asphalt shall be protected from freezing in a weathertight enclosure. Store materials in an enclosed area free from contact with soil and weather, and maintain at not less than 10 degrees C for at least 24 hours before use. Reinforcement fabrics shall be protected from moisture damage and moisture absorption in a weathertight enclosure or shall be stored off the ground on pallets, and covered on top and all sides with breathable-type canvas tarpaulins. Plastic sheets cause condensation buildup and therefore shall not be used to cover waterproofing materials. If material is dated for use or shelf life is indicated on the labels, remove outdated material from the jobsite. Damaged or deteriorated materials shall be removed from project site.

PART 2 PRODUCTS

2.1 BITUMEN

Asphalt; ASTM D449/D449M, Type III.

2.2 BITUMINOUS PLASTIC CEMENT

ASTM D4586/D4586M, Type II for asphalt.

2.3 MEMBRANE FABRIC

The following requirements shall apply:

Felt or Fabric Material	Saturant or Impregnant	Specification
Glass (felt) mat	Asphalt	ASTM D2178/D2178M, Type III
Reinforcing glass fabric	Asphalt	ASTM D1668/D1668M, Type I
Reinforcing cotton fabric	Asphalt	ASTM D173/D173M

2.3.1 Cotton Fabrics

Cotton fabrics shall be woven entirely of cotton conforming with ASTM D173/D173M, thoroughly and uniformly saturated with asphalt.

2.4 NAILS

Galvanized roofing nails.

2.5 PRIMER

ASTM D41/D41M for asphalt.

2.6 PROTECTION BOARD

ASTM D517, plain, asphalt plank; ASTM C208, construction grade building board, 12.7 mm thick, asphalt saturated or coated; ASTM C726, 11 mm thick, covered on one side with waterproof paper or asphalt-saturated felt.

PART 3 EXECUTION

3.1 INSPECTION OF SURFACES

Before starting the work, inspect all surfaces to be waterproofed to determine if in satisfactory condition. Check the location and setting of all embedded items. Place backing and blocking and perimeter framing for recessed items as required by the various trades on the project. Complete conduit, piping, and other required rough-in. Notify the Contracting Officer of serious defects or conditions that will prevent satisfactory application. Start application after such defects and conditions have been corrected.

3.2 PREPARATION OF SURFACES

Surfaces to be treated shall be clean and dry, smooth and free from deleterious and excess materials and projections. Concrete surfaces shall be properly cured, free of release agents, oil, grease, dirt, laitance, loose material, frost, debris and other contaminants. Thoroughly wet holes, joints, cracks, and voids in concrete with water, and then carefully fill with portland cement mortar, strike flush, and permit to dry. Cut off or grind smooth high spots. Give surfaces to receive asphalt membrane waterproofing a priming coat of asphalt primer. Apply priming coat at a rate not less than 4 liters per 10 square meters, covering the entire surface to be waterproofed. Allow primer to dry before applying waterproofing.

3.3 APPLICATION

Install waterproofing where indicated. Provide ventilation for enclosed spaces when using bituminous membrane waterproofing.

3.3.1 Protection of Surrounding Areas

Before starting the waterproofing work, the surrounding areas and surfaces shall be protected from spillage and migration of asphalt onto other work. Drains and conductors shall be protected from clogging with asphalt.

3.3.1.1 Fired Kettles

Melt kettles for bitumen shall not be closer than 8 meters to buildings or combustible materials. Provide minimum of two 9 kilogram ABC all-purpose type extinguishers at melting kettle and area of hot material application. Equip kettles with automatic thermostatic control capable of maintaining asphalt temperature. Controls shall be calibrated and

maintained in working order for duration of work. Equip kettles with means of agitation to ensure controlled uniform temperature throughout contents to prevent spot heating. Do not heat contents above flash point.ext

3.3.1.2 Heating and Application of Bitumen Coatings

Heat solid bitumen in kettle, equipped with an automatic heating device or control unit for positive control of the specified temperature. Provide an accurate and clearly readable thermometer on all kettles. Heat bitumen to flow freely but not above 190 degrees C. Apply bitumen over the primer, between each ply and as a top coating at the rate of not less than 10 kilograms of asphalt per 10 square meters of surface.

3.3.2 Membrane Waterproofing

3.3.2.1 Below-Grade Wall Waterproofing

Waterproofing for foundation walls shall consist of a 3-ply hot-applied asphalt membrane system. Fabrics shall be installed using the "shingle" method. Joints shall be caulked prior to primer applications. Primer shall be applied at a rate of 0.2 liters per square meter. Fabrics shall be overlapped at ends and staggered a minimum 610 mm for 3-ply system. End-to-end taping is not acceptable. Each fabric shall be firmly embedded into a solid uniform coating of hot asphalt at a rate of 0.98 kg per square meter by pressing with broom. Fabrics shall not touch fabrics. Hot asphalt shall penetrate each fabric to provide the required adhesion. Asphalt between fabrics shall not be excessive to prevent slippage. Waterproofing system consisting of two or more fabrics shall be provided with fabric reinforcement at corners, angles, over construction joints, and in locations where waterproofing fabrics are subject to unusual stress.

3.3.2.2 Floor Waterproofing

Primer shall be applied at a rate of 0.2 liters per square meter. Primer shall not be left in puddles. Primer shall be dry to the touch before application of asphalt. Where slab abuts walls, first reinforcing fabric shall extend 150 mm minimum on slab and 200 mm on wall. At vertical corners, first fabric shall extend minimum 125 mm from corner on each side. Second fabric shall lap the first fabric 50 mm minimum. At floor drains, and elsewhere as indicated, the fabric shall extend into a clamping device, set in a heavy coating of flashing cement, and securely clamped.

3.3.3 Fabric Membrane Reinforcement

Provide fabric membranes to reinforce felts at intersections. Provide reinforcement consisting of two plies of fabric membrane cemented in place and to each other with bituminous plastic cement not less than 2 mm thick for each coating. At the intersection of slabs and vertical surfaces, extend the first ply at least 150 mm on the slab and 100 mm up the vertical surface. At intersections of two vertical surfaces, extend the first ply at least 250 mm on each side of the intersection. Place second ply to lap the first by not less than 50 mm.

3.3.4 Flashing Flanges

Prime flashing flanges of the sleeves of pipes and ducts penetrating the waterproofing membrane. Allow primer to dry. Strip flanges in with two fabric membrane collars cemented in place and to each other with

bituminous plastic cement. Extend collars 100 and 150 mm, respectively, beyond the edge of the flanges, cover the flanges, and fit the flanges tight against the sleeve. Extend waterproofing connecting with work exposed to the weather back of same, or counter flash to form a watertight connection.

3.3.5 Clamping Devices

At floor drains and elsewhere, as indicated, extend membrane into clamping device set in heavy coating of bituminous plastic cement, and clamp securely.

3.3.6 Reglets

Install continuous reglets as specified in Section 07 60 00 FLASHING AND SHEET METAL to receive the exposed edges of membrane waterproofing. After placement of waterproofing, completely fill reglets with bitumen.

3.4 PROTECTIVE COVERING

3.4.1 Vertical Surfaces

Protect membrane waterproofing against which backfill is to be placed by providing protective covering pressed into the final mopping while the mopping of bitumen is still hot. Butt edges of protection board against adjacent edges of protection boards. Cover exposed surfaces with a coating of bitumen. Where surfaced fiberboard or mineral fiberboard is used, place surface side facing outward. Fit board around pipes and projections so as to cover the entire surface of the membrane waterproofing.

3.4.2 Horizontal Surfaces

Place protective covering over membrane immediately after application has thoroughly dried. Remove protective covering immediately before proceeding with work which will conceal the membrane waterproofing.

3.5 CLEAN-UP

Surfaces of other work which are stained with waterproofing materials shall be cleaned with a cleaner recommended by waterproofing manufacturer.

3.6 SCHEDULE

Some metric measurements in this section are based on mathematical conversion of inch-pound measurement, and not on metric measurement commonly agreed to by the manufacturers or other parties. The inch-pound and metric measurements shown are as follows:

Products	Inch-Pound	Metric
Protection Board	1/2 inch	12.7 mm
	7/16 inch	11 mm
Polyethylene Sheet	30 lbs.	13.6 kg

Products	Inch-Pound	Metric
Laminated Sheet	0.40 lbs. per sq. ft	1.95 kg per sq. m

-- End of Section --

SECTION 07 21 13

BOARD AND BLOCK INSULATION
05/11

PART 1 GENERAL

1.1 REFERENCES

The publications listed below form a part of this specification to the extent referenced. The publications are referred to within the text by the basic designation only.

ASTM INTERNATIONAL (ASTM)

ASTM C203	(2005; R 2012) Breaking Load and Flexural Properties of Block-Type Thermal Insulation
ASTM C272/C272M	(2012) Standard Test Method for Water Absorption of Core Materials for Sandwich Constructions
ASTM C578	(2014) Standard Specification for Rigid, Cellular Polystyrene Thermal Insulation
ASTM C591	(2013) Standard Specification for Unfaced Preformed Rigid Cellular Polyisocyanurate Thermal Insulation
ASTM C930	(2012) Potential Health and Safety Concerns Associated with Thermal Insulation Materials and Accessories
ASTM D1621	(2010) Compressive Properties of Rigid Cellular Plastics
ASTM D3833/D3833M	(1996; R 2011) Water Vapor Transmission of Pressure-Sensitive Tapes
ASTM D4397	(2010) Standard Specification for Polyethylene Sheeting for Construction, Industrial, and Agricultural Applications
ASTM E136	(2012) Behavior of Materials in a Vertical Tube Furnace at 750 Degrees C
ASTM E154/E154M	(2008a; R 2013; E 2013) Water Vapor Retarders Used in Contact with Earth Under Concrete Slabs, on Walls, or as Ground Cover
ASTM E84	(2014) Standard Test Method for Surface Burning Characteristics of Building Materials
ASTM E96/E96M	(2013) Standard Test Methods for Water Vapor Transmission of Materials

NATIONAL FIRE PROTECTION ASSOCIATION (NFPA)

NFPA 211	(2013) Standard for Chimneys, Fireplaces, Vents, and Solid Fuel-Burning Appliances
NFPA 54	(2015) National Fuel Gas Code
NFPA 70	(2014; AMD 1 2013; Errata 1 2013; AMD 2 2013; Errata 2 2013; AMD 3 2014; Errata 3 2014) National Electrical Code

SCIENTIFIC CERTIFICATION SYSTEMS (SCS)

SCS	Scientific Certification Systems (SCS)Indoor Advantage

U.S. NATIONAL ARCHIVES AND RECORDS ADMINISTRATION (NARA)

29 CFR 1910.134	Respiratory Protection

UL ENVIRONMENT (ULE)

ULE Greenguard	UL Greenguard Certification Program

1.2 SUBMITTALS

Government approval is required for submittals with a "G" designation; submittals not having a "G" designation are for Contractor Quality Control approval. Submittals with an "S" are for inclusion in the Sustainability Notebook, in conformance to Section 01 33 29SUSTAINABILITY REQUIREMENTS. Submit the following in accordance with Section 01 33 00 SUBMITTAL PROCEDURES:

SD-03 Product Data

Block or board insulation; G

Vapor retarder

Pressure sensitive tape

Protection board or coating

Accessories

Certification

SD-08 Manufacturer's Instructions

Block or Board Insulation

Adhesive

1.3 SUSTAINABLE DESIGN CERTIFICATION

Product shall be third party certified in accordance with ULE Greenguard Gold, SCS Scientific Certification Systems Indoor Advantage Gold or equal. Certification shall be performed annually and shall be current.

1.4 DELIVERY, STORAGE, AND HANDLING

1.4.1 Delivery

Deliver materials to the site in original sealed wrapping bearing manufacturer's name and brand designation, specification number, type, grade, R-value, and class. Store and handle to protect from damage. Do not allow insulation materials to become wet, soiled, crushed, or covered with ice or snow. Comply with manufacturer's recommendations for handling, storing, and protecting of materials before and during installation.

1.4.2 Storage

Inspect materials delivered to the site for damage; unload and store out of weather in manufacturer's original packaging. Store only in dry locations, not subject to open flames or sparks, and easily accessible for inspection and handling.

1.5 SAFETY PRECAUTIONS

1.5.1 Respirators

Provide installers with dust/mist respirators, training in their use, and protective clothing, all approved by National Institute for Occupational Safety and Health (NIOSH)/Mine Safety and Health Administration (MSHA) in accordance with 29 CFR 1910.134.

1.5.2 Other Safety Considerations

Consider safety concerns and measures as outlined in ASTM C930.

PART 2 PRODUCTS

2.1 BLOCK OR BOARD INSULATION

Provide only thermal insulating materials recommended by manufacturer for type of application indicated. Provide board or block thermal insulation conforming to the following standards and the physical properties listed below:

a. Extruded Preformed Cellular Polystyrene: ASTM C578
b. Unfaced Preformed Rigid Polyurethane and Polyisocyanurate Board: ASTM C591

2.1.1 Thermal Resistance

As indicated.

2.1.2 Fire Protection Requirement

a. Flame spread index of 75 or less when tested in accordance with ASTM E84.

b. Smoke developed index of 200 or less when tested in accordance with ASTM E84.

2.1.3 Other Material Properties

Provide thermal insulating materials with the following properties:

a. Rigid cellular plastics: Compressive Resistance at Yield: Not less than 170 kilopascals (kPa) when measured according to ASTM D1621.

b. Flexural strength: Not less than 275 kPa when measured according to ASTM C203.

c. Water Vapor Permeance: Not more than 6.3 by 10-8 g/Pa.s.m2 or less when measured according to ASTM E96/E96M, desiccant method, in the thickness required to provide the specified thermal resistance, including facings, if any.

d. Water Absorption: Not more than .2 percent by total immersion, by volume, when measured according to ASTM C272/C272M.

2.1.4 Recycled Materials

Provide thermal insulation containing recycled materials to the extent practicable, provided that the material meets all other requirements of this section. The minimum required recycled material contents (by weight, not volume) are:

Polyisocyanurate/Polyurethane:	9 percent
Phenolic Rigid Foam:	5 percent
Perlite Board:	23 percent

2.1.5 Prohibited Materials

Do not provide materials containing more than one percent of asbestos.

2.2 VAPOR RETARDER AND DAMPPROOFING

2.2.1 Vapor Retarder in Frame Walls and Roofs

a. 0.15 mm thick polyethylene sheeting conforming to ASTM D4397 and having a water vapor permeance of 5.72 by 10-8g/Pa.s.m2 or less when tested in accordance with ASTM E96/E96M.

2.2.2 Vapor Retarder under Floor Slab

a. Water vapor permeance: 1.14 by 10-8 g/Pa.s.m2 or less when tested in accordance with ASTM E96/E96M.

b. Puncture resistance: Maximum load no less than 18 kilograms when tested according to ASTM E154/E154M.

2.3 PRESSURE SENSITIVE TAPE

As recommended by manufacturer of vapor retarder and having a water vapor permeance rating of 5.72 by 10-8 g/Pa.s.m2 or less when tested in

accordance with ASTM D3833/D3833M.

2.4 PROTECTION BOARD OR COATING

As recommended by insulation manufacturer.

2.5 ACCESSORIES

2.5.1 Adhesive

As recommended by insulation manufacturer. VOC content less than 50 less water.

2.5.2 Mechanical Fasteners

Corrosion resistant fasteners as recommended by the insulation manufacturer.

PART 3 EXECUTION

3.1 EXISTING CONDITIONS

Before installing insulation, ensure that all areas that will be in contact with the insulation are dry and free of projections which could cause voids, compressed insulation, or punctured vapor retarders. If installing perimeter or under slab insulation, check that the fill is flat, smooth, dry, and well tamped. If moisture or other conditions are found that do not allow the proper installation of the insulation, do not proceed but notify the Contracting Officer of such conditions.

3.2 PREPARATION

3.2.1 Blocking Around Heat Producing Devices

Unless using insulation board that passes ASTM E136 in addition to the requirements in Part 2, install non-combustible blocking around heat producing devices to provide the following clearances:

a. Recessed lighting fixtures, including wiring compartments, ballasts, and other heat producing devices, unless certified for installation surrounded by insulation: 75 mm from outside face of fixtures and devices or as required by NFPA 70and, if insulation is to be placed above fixture or device, 600 mm above fixture.

b. Vents and vent connectors used for venting products of combustion, flues, and chimneys other than masonry chimneys: minimum clearances as required by NFPA 211.

c. Gas Fired Appliances: Clearances as required in NFPA 54.

Blocking is not required if chimneys or flues are certified by the Manufacturer for use in contact with insulating materials.

3.3 INSTALLATION

3.3.1 Insulation Board

Install and handle insulation in accordance with the manufacturer's installation instructions. Keep material dry and free of extraneous materials. Observe safe work practices.

3.3.2 Electrical Wiring

Do not install insulation in a manner that would sandwich electrical wiring between two layers of insulation.

3.3.3 Continuity of Insulation

Butt tightly against adjoining boards, studs, rafters, joists, sill plates, headers and obstructions. Provide continuity and integrity of insulation at corners, wall to ceiling joint, roof, and floor. Avoid creating any thermal bridges or voids.

3.4 PERIMETER AND UNDER SLAB INSULATION

Install perimeter thermal insulation where heated spaces are adjacent to exterior walls or slab edges in slab-on-grade or floating-slab construction.

3.4.1 Manufacturer's Instructions

Install, attach, tape edges, provide vapor retarder and other requirements such as protection against vermin, insects, damage during construction as recommended in manufacturer's instructions.

3.4.2 Insulation on Vertical Surfaces

Install thermal insulation as indicated. Fasten insulation with adhesive or mechanical fasteners.

3.4.3 Protection of Insulation

Protect insulation on vertical surfaces from damage during construction and back filling by application of protection board or coating. Do not leave installed vertical insulation unprotected overnight. Provide protection extending at least 300 mm below grade.

3.5 VAPOR RETARDER

Apply a continuous vapor retarder as indicated. Overlap all joints at least 150 mm and seal with pressure sensitive tape. Seal at sill, header, windows, doors and utility penetrations. Repair punctures or tears with pressure sensitive tape.

-- End of Section --

SECTION 07 21 16

MINERAL FIBER BLANKET INSULATION
11/11

PART 1 GENERAL

1.1 REFERENCES

The publications listed below form a part of this specification to the extent referenced. The publications are referred to within the text by the basic designation only.

ASTM INTERNATIONAL (ASTM)

ASTM C665	(2012) Mineral-Fiber Blanket Thermal Insulation for Light Frame Construction and Manufactured Housing
ASTM C930	(2012) Potential Health and Safety Concerns Associated with Thermal Insulation Materials and Accessories
ASTM D3833/D3833M	(1996; R 2011) Water Vapor Transmission of Pressure-Sensitive Tapes
ASTM E136	(2012) Behavior of Materials in a Vertical Tube Furnace at 750 Degrees C
ASTM E84	(2014) Standard Test Method for Surface Burning Characteristics of Building Materials
ASTM E96/E96M	(2013) Standard Test Methods for Water Vapor Transmission of Materials

NATIONAL FIRE PROTECTION ASSOCIATION (NFPA)

NFPA 211	(2013) Standard for Chimneys, Fireplaces, Vents, and Solid Fuel-Burning Appliances
NFPA 54	(2015) National Fuel Gas Code
NFPA 70	(2014; AMD 1 2013; Errata 1 2013; AMD 2 2013; Errata 2 2013; AMD 3 2014; Errata 3 2014) National Electrical Code

U.S. NATIONAL ARCHIVES AND RECORDS ADMINISTRATION (NARA)

29 CFR 1910.134	Respiratory Protection

UL ENVIRONMENT (ULE)

ULE Greenguard	UL Greenguard Certification Program

1.2 SUBMITTALS

Government approval is required for submittals with a "G" designation;

submittals not having a "G" designation are for Contractor Quality Control approval. Submittals with an "S" are for inclusion in the Sustainability Notebook, in conformance to Section 01 33 29SUSTAINABILITY REQUIREMENTS. Submit the following in accordance with Section 01 33 00 SUBMITTAL PROCEDURES:

SD-03 Product Data

Blanket insulation; G

Vapor retarder; G

Pressure sensitive tape; G

Accessories; G

Certification

SD-08 Manufacturer's Instructions

Insulation

1.3 SUSTAINABLE DESIGN CERTIFICATION

Product shall be third party certified in accordance with ULE Greenguard Gold. Certification shall be performed annually and shall be current.

1.4 DELIVERY, STORAGE, AND HANDLING

1.4.1 Delivery

Deliver materials to site in original sealed wrapping bearing manufacturer's name and brand designation, specification number, type, grade, R-value, and class. Store and handle to protect from damage. Do not allow insulation materials to become wet, soiled, crushed, or covered with ice or snow. Comply with manufacturer's recommendations for handling, storing, and protecting of materials before and during installation.

1.4.2 Storage

Inspect materials delivered to the site for damage; unload and store out of weather in manufacturer's original packaging. Store only in dry locations, not subject to open flames or sparks, and easily accessible for inspection and handling.

1.5 SAFETY PRECAUTIONS

1.5.1 Respirators

Provide installers with dust/mist respirators, training in their use, and protective clothing, all approved by National Institute for Occupational Safety and Health (NIOSH)/Mine Safety and Health Administration (MSHA) in accordance with 29 CFR 1910.134.

1.5.2 Smoking

Do not smoke during installation of blanket thermal insulation.

1.5.3 Other Safety Concerns

Consider other safety concerns and measures as outlined in ASTM C930.

PART 2 PRODUCTS

2.1 BLANKET INSULATION

ASTM C665, Type III, blankets with reflective coverings; Class A, membrane-faced surface with a flame spread of 25 or less, except a flame spread rating of 25 or less and a smoke developed rating of 150 or less when tested in accordance with ASTM E84.

2.1.1 WMP-VR-R Insulation

Fiberglass shall be as outlined in the North American Insulation Manufacturing Association (formerly T.I.M.A) specification, or P.E.B. 202 or equal, with an R-value as indicated. The fiberglass shall be faced on one side. The composite of fiberglass and facing shall have surface burning characteristics not to exceed 25 flame spread and 50 smoke developed when tested in accordance with Underwriters Laboratories 723 test method or ASTM E 84 test method.

Facing shall be composed of 38.1 micron white polypropylene film, a reinforcing layer, and 12.7 micron metallized polyester film. The product shall be reinforced with a 16/100 mm x 16/100 mm tri-directional fiberglass scrim. The resulting facing shall have a water vapor transmission rate of 1.15 ng/N.s (ASTM E96, Procedure A), and a mullen burst of 7.0 kg/cm². Tensile strength shall be 6.1 kN/m in the machine direction and 6.1 kN/m in the cross-machine direction.

2.1.2 Thermal Resistance Value (R-VALUE)

As indicated

2.1.3 Recycled Materials

Provide Thermal Insulation containing recycled materials to the extent practicable, provided the material meets all other requirements of this section. The minimum required recycled materials content by weight are:

Rock Wool: 75 percent slag
Fiberglass: 20 to 25 percent glass cullet

2.1.4 Prohibited Materials

Do not provide asbestos-containing materials.

2.2 VAPOR RETARDER

a. Integral Membrane with the following properties:

Water Vapor Permeance: ASTM E96/E96M: 5.72 by 10-8 g/Pa.s.m2
Maximum Flame Spread: ASTM E84: 25

Combustion Characteristics: Passing ASTM E136

2.3 PRESSURE SENSITIVE TAPE

As recommended by the vapor retarder manufacturer and having a water vapor permeance rating of 5.72 by 10-8 g/Pa.s.m2 or less when tested in accordance with ASTM D3833/D3833M.

2.4 ACCESSORIES

2.4.1 Adhesive

As recommended by the insulation manufacturer, having a VOC content less than 80 less water.

2.4.2 Mechanical Fasteners

Corrosion resistant fasteners as recommended by the insulation manufacturer.

2.4.3 Wire Mesh

Corrosion resistant and as recommended by the insulation manufacturer.

PART 3 EXECUTION

3.1 EXISTING CONDITIONS

Before installing insulation, ensure that areas that will be in contact with the insulation are dry and free of projections which could cause voids, compressed insulation, or punctured vapor retarders. If moisture or other conditions are found that do not allow the workmanlike installation of the insulation, do not proceed but notify Contracting Officer of such conditions.

3.2 PREPARATION

3.2.1 Blocking at Attic Vents and Access Doors

Prior to installation of insulation, install permanent blocking to prevent insulation from slipping over, clogging, or restricting air flow through soffit vents at eaves. Install permanent blocking around attic trap doors. Install permanent blocking to maintain accessibility to equipment or controls that require maintenance or adjustment.

3.2.2 Blocking Around Heat Producing Devices

Install non-combustible blocking around heat producing devices to provide the following clearances:

a. Recessed lighting fixtures, including wiring compartments, ballasts, and other heat producing devices, unless these are certified by the manufacturer for installation surrounded by insulation: 75 mm from outside face of fixtures and devices or as required by NFPA 70 and, if insulation is to be placed above fixture or device, 600 mm above fixture.

b. Vents and vent connectors used for venting the products of combustion, flues, and chimneys other than masonry chimneys: Minimum clearances as

required by NFPA 211.

c. Gas Fired Appliances: Clearances as required in NFPA 54.

Blocking around flues and chimneys is not required when insulation blanket, including any attached vapor retarder, passed ASTM E136, in addition to meeting all other requirements stipulated in Part 2. Blocking is also not required if the chimneys are certified by the manufacturer for use in contact with insulating materials.

3.3 INSTALLATION

3.3.1 Insulation

Install and handle insulation in accordance with manufacturer's instructions. Keep material dry and free of extraneous materials. Ensure personal protective clothing and respiratory equipment is used as required. Observe safe work practices.

3.3.1.1 Electrical wiring

Do not install insulation in a manner that would sandwich electrical wiring between two layers of insulation.

3.3.1.2 Continuity of Insulation

Install blanket insulation to butt tightly against adjoining blankets and to studs, rafters, joists, sill plates, headers and any obstructions. Where insulation required is thicker than depth of joist, provide full width blankets to cover across top of joists. Provide continuity and integrity of insulation at corners, wall to ceiling joints, roof, and floor. Avoid creating thermal bridges.

3.3.1.3 Installation at Bridging and Cross Bracing

Insulate at bridging and cross bracing by splitting blanket vertically at center and packing one half into each opening. Butt insulation at bridging and cross bracing; fill in bridged area with loose or scrap insulation.

3.3.1.4 Insulation Blanket with Affixed Vapor Retarder

Locate vapor retarder as indicated. Do not install blankets with affixed vapor retarders unless so specified. Unless the insulation manufacturer's instructions specifically recommend not to staple the flanges of the vapor retarder facing, staple flanges of vapor retarder at 150 mm intervals flush with face or set in the side of truss, joist, or stud. Avoid gaps and bulges in insulation and "fishmouth" in vapor retarders. Overlap both flanges when using face method. Seal joints and edges of vapor retarder with pressure sensitive tape. Stuff pieces of insulation into small cracks between trusses, joists, studs and other framing, such as at attic access doors, door and window heads, jambs, and sills, band joists, and headers. Cover these insulated cracks with vapor retarder material and tape all joints with pressure sensitive tape to provide air and vapor tightness.

3.3.1.5 Sizing of Blankets

Provide only full width blankets when insulating between trusses, joists, or studs. Size width of blankets for a snug fit where trusses, joists or studs are irregularly spaced.

3.3.1.6 Special Requirements for Ceilings

Place insulation under electrical wiring occurring across joists. Pack insulation into narrowly spaced framing. Do not block flow of air through soffit vents. Attach insulation to attic door by adhesive or staples.

3.3.1.7 Access Panels and Doors

Affix blanket insulation to access panels greater than one square foot and access doors in insulated floors and ceilings. Use insulation with same R-Value as that for floor or ceiling.

3.3.2 Installation of Separate Vapor Retarder

Apply continuous vapor retarder as indicated. Overlap joints at least 150 mm and seal with pressure sensitive tape. Seal at sill, header, windows, doors and utility penetrations. Repair punctures or tears with pressure sensitive tape.

-- End of Section --

SECTION 07 22 00

ROOF AND DECK INSULATION
08/11

PART 1 GENERAL

1.1 REFERENCES

The publications listed below form a part of this specification to the extent referenced. The publications are referred to within the text by the basic designation only.

ASTM INTERNATIONAL (ASTM)

ASTM C1289	(2014a) Standard Specification for Faced Rigid Cellular Polyisocyanurate Thermal Insulation Board
ASTM D4263	(1983; R 2012) Indicating Moisture in Concrete by the Plastic Sheet Method
ASTM D4897/D4897M	(2001; R 2009) Standard Specification for Asphalt-Coated Glass-Fiber Venting Base Sheet Used in Roofing
ASTM E84	(2014) Standard Test Method for Surface Burning Characteristics of Building Materials

FM GLOBAL (FM)

FM 4470	(2010) Single-Ply, Polymer-Modified Bitumen Sheet, Built-up Roof (BUR), and Liquid Applied Roof Assemblies for Use in Class 1 and Noncombustible Roof Deck Construction
FM APP GUIDE	(updated on-line) Approval Guide http://www.approvalguide.com/
FM P9513	(2002) Specialist Data Book Set for Roofing Contractors; contains 1-22 (2001), 1-28 (2002), 1-29 (2002), 1-28R/1-29R (1998), 1-30 (2000), 1-31 (2000), 1-32 (2000), 1-33 (2000), 1-34 (2001), 1-49 (2000), 1-52 (2000), 1-54 (2001)

SCIENTIFIC CERTIFICATION SYSTEMS (SCS)

SCS	Scientific Certification Systems (SCS)Indoor Advantage

U.S. GREEN BUILDING COUNCIL (USGBC)

LEED NC	(2009) Leadership in Energy and Environmental Design(tm) New Construction Rating System

UL ENVIRONMENT (ULE)

ULE Greenguard UL Greenguard Certification Program

UNDERWRITERS LABORATORIES (UL)

UL Bld Mat Dir (2012) Building Materials Directory

1.2 SUBMITTALS

Government approval is required for submittals with a "G" designation; submittals not having a "G" designation are for Contractor Quality Control approval. Submittals with an "S" are for inclusion in the Sustainability Notebook, in conformance to Section 01 33 29 SUSTAINABILITY REPORTING. Submit the following in accordance with Section 01 33 00 SUBMITTAL PROCEDURES:

SD-02 Shop Drawings

Wood nailers

Show location and spacing of wood nailers that are required for securing insulation. Show a complete description of the procedures for the installation of each phase of the system indicating the type of materials, thicknesses, identity codes, sequence of laying insulation, location of ridges and valleys, special methods for cutting and fitting of insulation, and special precautions. The drawings shall be based on field measurements.

SD-03 Product Data

Fasteners; G

Insulation; G

Certification

Include minimum thickness of insulation for steel and concrete decks and fastener pattern for insulation.

Recycled materials; (LEED NC)SD-06 Test Reports

Flame spread and smoke developed ratings

Submit in accordance with ASTM E84.

SD-07 Certificates

Installer qualifications

SD-08 Manufacturer's Instructions

Nails and fasteners

Roof insulation, including field of roof and perimeter attachment requirements.

1.3 MANUFACTURER'S CERTIFICATE

Submit certificate from the insulation manufacturer attesting that the installer has the proper qualifications for installing tapered roof insulation systems.

Certificate attesting that the expanded perlite or polyisocyanurate insulation contains recovered material and showing estimated percent of recovered material. Certificates of compliance for felt materials.

1.4 QUALITY ASSURANCE

1.4.1 Insulation on Concrete Decks

Roof insulation shall have a flame spread rating not greater than 75 and a smoke developed rating not greater than 150, exclusive of covering, when tested in accordance with ASTM E84. Insulation bearing the UL label and listed in the UL Bld Mat Dir as meeting the flame spread and smoke developed ratings will be accepted in lieu of copies of test reports. Compliance with flame spread and smoke developed ratings will not be required when insulation has been tested as part of a roof construction assembly of the type used for this project and the construction is listed as fire-classified in the UL Bld Mat Dir or listed as Class I roof deck construction in the FM APP GUIDE. Insulation tested as part of a roof construction assembly shall bear UL or FM labels attesting to the ratings specified herein.

1.4.2 Sustainable Design Certification

Product shall be third party certified in accordance with ULE Greenguard Gold, SCS Scientific Certification Systems Indoor Advantage Gold or equal. Certification shall be performed annually and shall be current.

1.5 DELIVERY, STORAGE, AND HANDLING

1.5.1 Delivery

Deliver materials to site in manufacturer's unopened and undamaged standard commercial containers bearing the following legible information:

a. Name of manufacturer;

b. Brand designation;

c. Specification number, type, and class, as applicable, where materials are covered by a referenced specification; and

Deliver materials in sufficient quantity to allow continuity of the work.

1.5.2 Storage and Handling

Store and handle materials in a manner to protect from damage, exposure to open flame or other ignition sources, and from wetting, condensation or moisture absorption. Store in an enclosed building or trailer that provides a dry, adequately ventilated environment. Replace damaged material with new material.

1.6 ENVIRONMENTAL CONDITIONS

Do not install roof insulation during inclement weather or when air temperature is below 4 degrees C and interior humidity is 45 percent or greater, or when there is visible ice, frost, or moisture on the roof deck.

PART 2 PRODUCTS

2.1 INSULATION

2.1.1 Insulation Types

Roof insulation shall be one or an assembly of a maximum of three of the following materials and compatible with attachment methods for the specified insulation and roof membrane:

a. Polyisocyanurate Board: ASTM C1289 Type II, fibrous felt or glass mat membrane both sides, except minimum compressive strength shall be 140 kPa.

2.1.2 Recovered Materials

Provide thermal insulation materials containing recycled materials to the extent practical. The required minimum recycled material content for the listed materials are:

Polyisocyanurate/polyurethane:	9 percent recovered material

2.1.3 Insulation Thickness

As indicated on the drawings.

2.2 MOISTURE CONTROL

2.2.1 Ventilating Felt for Poured Concrete Decks

ASTM D4897/D4897M, Type II, non-perforated, with spot mopping holes where specified.

2.3 FASTENERS

Flush-driven through flat round or hexagonal steel or plastic plates. Steel plates shall be zinc-coated, flat round not less than 35 mm diameter or hexagonal not less than 0.4 mm. Plastic plates shall be high-density, molded thermoplastic with smooth top surface, reinforcing ribs and not less than 75 mm in diameter. Fastener head shall recess fully into the plastic plate after it is driven. Plates shall be formed to prevent dishing. Do not use bell-or cup-shaped plates. Fasteners shall conform to insulation manufacturer's recommendations except that holding power, when driven, shall be not less than 178 N each in steel deck. Fasteners for steel or concrete decks shall conform to FM APP GUIDE for Class I roof deck construction, and shall be spaced to withstand an uplift pressure of 4.3 kPa.

2.3.1 Fasteners for Poured Concrete Decks

Approved hardened fasteners or screws to penetrate deck at least 25 mm but

not more than 38 mm, conforming to FM 4470, and listed in FM APP GUIDE for Class I roof deck construction. Quantity and placement to withstand an uplift pressure of 4.31 kPa conforming to FM APP GUIDE.

2.4 WOOD NAILERS

Pressure-preservative-treated as specified.

PART 3 EXECUTION

3.1 EXAMINATION AND PREPARATION

3.1.1 Surface Inspection

Surfaces shall be clean, smooth, and dry. Check roof deck surfaces, including surfaces sloped to roof drains and outlets, for defects before starting work.

The Contractor shall inspect and approve the surfaces immediately before starting installation. Prior to installing ventilating felt, perform the following:

a. Examine precast concrete decks to ensure that joints between precast units are properly grouted and leveled to provide suitable surfaces for installation of ventilating felt insulation.

b. Prior to installing any roof system on a concrete deck, conduct a test per ASTM D4263. The deck is acceptable for roof system application when there is no visible moisture on underside of plastic sheet after 24 hours.

3.1.2 Surface Preparation

Correct defects and inaccuracies in roof deck surface to eliminate poor drainage and hollow or low spots and perform the following:

a. Install wood nailers the same thickness as insulation at eaves, edges, curbs, walls, and roof openings for securing cant strips, gravel stops, gutters, and flashing flanges. Space nailers in accordance with approved shop drawings.

3.2 INSTALLATION OF VENTILATING FELT

Apply ventilating felt in accordance with manufacturer's printed instructions. Extend over roof cants, up vertical surfaces and terminate under cap flashing; at roof edges terminate under outside edge of perimeter edge nailers or under gravel stop fascia.

3.3 INSULATION INSTALLATION

Apply insulation in two layers with staggered joints when total required thickness of insulation exceeds 13 mm. Lay insulation so that continuous longitudinal joints are perpendicular to direction of roofing, as specified in Section 07 53 23, "ETHYLENE-PROPYLENE-DIENE-MONOMER ROOFING", and end joints of each course are staggered with those of adjoining courses. When using multiple layers of insulation, joints of each succeeding layer shall be parallel and offset in both directions with

respect to layer below. Keep insulation 13 mm clear of vertical surfaces penetrating and projecting from roof surface.

3.3.1 Installation Using Only Mechanical Fasteners

Secure total thickness of insulation with penetrating type fasteners.

3.3.2 Special Precautions for Installation of Foam Insulation

3.3.2.1 Polyisocyanurate Insulation

Where polyisocyanurate foam board insulation is provided, install 13 mm thick wood fiberboard, glass mat gypsum roof board, or 19 mm thick expanded perlite board insulation over top surface of foam board insulation. Stagger joints of insulation with respect to foam board insulation below.

3.4 PROTECTION

3.4.1 Protection of Applied Insulation

Completely cover each day's installation of insulation with the finished roofing specified in 07 53 23 ETHYLENE-PROPYLENE-DIENE-MONOMER ROOFING on same day. Do not permit phased construction. Protect open spaces between insulation and parapets or other walls and spaces at curbs, scuttles, and expansion joints, until permanent roofing and flashing are applied. Do not permit storing, walking, wheeling, or trucking directly on insulation or on roofed surfaces. Provide smooth, clean board or plank walkways, runways, and platforms near supports, as necessary, to distribute weight to conform to indicated live load limits of roof construction. Exposed edges of the insulation shall be protected by cutoffs at the end of each work day or whenever precipitation is imminent. Cutoffs shall be 2 layers of bituminous-saturated felt set in plastic bituminous cement or EPDM membrane set in roof cement. Fill all profile voids in cut-offs to prevent entrapping of moisture into the area below the membrane. Cutoffs shall be removed when work is resumed.

3.4.2 Damaged Work and Materials

Restore work and materials that become damaged during construction to original condition or replace with new materials.

3.5 INSPECTION

The Contractor shall establish and maintain an inspection procedure to assure compliance of the installed roof insulation with the contract requirements. Any work found not to be in compliance with the contract shall be promptly removed and replaced or corrected in an approved manner. Quality control shall include, but not be limited to, the following:

a. Observation of environmental conditions; number and skill level of insulation workers; start and end time of work.

b. Verification of certification, listing or label compliance with FM P9513.

c. Verification of proper storage and handling of insulation and vapor retarder materials before, during, and after installation.

d. Inspection of vapor retarder application, including edge envelopes and mechanical fastening.

e. Inspection of mechanical fasteners; type, number, length, and spacing.

f. Coordination with other materials, cants, sleepers, and nailing strips.

g. Inspection of insulation joint orientation and laps between layers, joint width and bearing of edges of insulation on deck.

h. Installation of cutoffs and proper joining of work on subsequent days.

i. Continuation of complete roofing system installation to cover insulation installed same day.

-- End of Section --

THIS PAGE HAS BEEN INTENTIONALLY LEFT BLANK

SECTION 07 53 23

ETHYLENE-PROPYLENE-DIENE-MONOMER ROOFING
05/12

PART 1 GENERAL

1.1 REFERENCES

The publications listed below form a part of this specification to the extent referenced. The publications are referred to within the text by the basic designation only.

AMERICAN SOCIETY OF CIVIL ENGINEERS (ASCE)

ASCE 7	(2010; Errata 2011; Supp 1 2013) Minimum Design Loads for Buildings and Other Structures

ASTM INTERNATIONAL (ASTM)

ASTM D4637/D4637M	(2014; E 2014) EPDM Sheet Used in Single-Ply Roof Membrane
ASTM D4811/D4811M	(2006; E 2013; R 2013) Nonvulcanized (Uncured) Rubber Sheet Used as Roof Flashing
ASTM D6369	(1999; R 2006) Design of Standard Flashing Details for EPDM Roof Membranes
ASTM E108	(2011) Fire Tests of Roof Coverings

FM GLOBAL (FM)

FM 4470	(2010) Single-Ply, Polymer-Modified Bitumen Sheet, Built-up Roof (BUR), and Liquid Applied Roof Assemblies for Use in Class 1 and Noncombustible Roof Deck Construction
FM APP GUIDE	(updated on-line) Approval Guide http://www.approvalguide.com/

NATIONAL ROOFING CONTRACTORS ASSOCIATION (NRCA)

NRCA RoofMan	(2011 thru 2014) The NRCA Roofing Manual

UNDERWRITERS LABORATORIES (UL)

UL 790	(2004; Reprint Jul 2014) Standard Test Methods for Fire Tests of Roof Coverings

1.2 DESCRIPTION OF ROOF MEMBRANE SYSTEM

Fully adhered EPDM roof membrane system applied over insulation substrate.

1.3 SUBMITTALS

Government approval is required for submittals with a "G" designation; submittals not having a "G" designation are for Contractor Quality Control approval. Submittals with an "S" are for inclusion in the Sustainability Notebook, in conformance to Section 01 33 29 SUSTAINABILITY REPORTING. Submit the following in accordance with Section 01 33 00 SUBMITTAL PROCEDURES:

SD-02 Shop Drawings

Roof Plan Drawing

Wind Load Calculations

Boundaries of Enhanced Perimeter

Corner Attachments of Roof System Components

Location of Perimeter Half-Sheets

Spacing of Perimeter, Corner, and Infield Fasteners

Slopes and Drain Locations

SD-03 Product Data

Cement

EPDM Sheet; G

Seam Tape

Bonding Adhesive

Lap Splice Adhesive

Water Cutoff Mastic/Water Block

Lap Cleaner, Lap Sealant, and Edge Treatment

Flashings

Flashing Accessories

Flashing Tape

Fasteners and Plates

Roof Insulation

Pre-Manufactured Accessories

Sample warranty certificate; G

Submit all data required together with requirements of this section. Include a written acceptance by the roof membrane manufacturer of the insulation and other products and accessories to be provided. List products in the applicable wind uplift and

fire rating classification listings, unless approved otherwise by the Contracting Officer.

SD-05 Design Data

Wind Uplift Calculations; G

Engineering calculations validating the wind resistance of roof system.

SD-07 Certificates

Qualification of Manufacturer

Certify that the manufacturer of the roof membrane meets requirements specified under paragraph entitled "Qualification of Manufacturer."

Qualification of Applicator

Certify that the applicator meets requirements specified under paragraph entitled "Qualification of Applicator."

Wind Uplift Resistance classification, as applicable; G

Fire Resistance classification; G

Submit the roof system assembly wind uplift and fire rating classification listings.

SD-08 Manufacturer's Instructions

Application; G

Application Method; G, including pattern and frequency of mechanical attachments required in the field of roof, corners, and perimeters to provide for the specified wind resistance

Membrane Flashing; G

Seam Tape

Tape Seams / Lap Splices

Adhesive Seams / Lap Splices

Perimeter Attachment

Primer

Fasteners

Include detailed application instructions and standard manufacturer drawings altered as required by these specifications. Explicitly identify in writing, differences between manufacturer's printed instructions and the specified requirements.

SD-11 Closeout Submittals

Warranty

Information Card

Instructions To Government Personnel

Include copies of Material Safety Data Sheets for maintenance/repair materials.

1.3.1 Shop Drawings

Roof plan drawing depicting wind load calculations and boundaries of enhanced perimeter and corner attachments of roof system components, location of perimeter half-sheets, spacing of perimeter, corner, and infield fasteners, as applicable. The drawing must reflect the project roof plan of each roof level and conditions indicated. Provide all slopes and drain locations.

1.4 QUALITY ASSURANCE

1.4.1 Qualification of Manufacturer

EPDM sheet roofing membrane manufacturer must have at least 5 years experience in manufacturing EPDM roofing products.

1.4.2 Qualification of Applicator

Roofing system applicator must be approved, authorized, or licensed in writing by the roof membrane manufacturer and must have a minimum of three years experience as an approved, authorized, or licensed applicator with that manufacturer and be approved at a level capable of providing the specified warranty. The applicator must supply the names, locations and client contact information of 5 projects of similar size and scope that the applicator has constructed using the manufacturer's roofing products submitted for this project within the previous three years.

1.4.3 Fire Resistance

Complete roof covering assembly must:

a. Be Class A rated in accordance with ASTM E108, FM 4470, or UL 790; and

FM or UL approved components of the roof covering assembly must bear the appropriate FM or UL label.

1.4.4 Wind Uplift Resistance

The complete roof system assembly shall be rated and installed to resist wind loads calculated in accordance with ASCE 7 and validated by uplift resistance testing in accordance with Factory Mutual (FM) test procedures. Do not install non-rated systems except as approved by the Contracting Officer. Submit licensed engineer's wind uplift calculations and substantiating data to validate any non-rated roof system. Base wind uplift measurements based on a design wind speed of 196 km/h in accordance with ASCE 7 and/or other applicable building code requirements

1.4.5 Preroofing Conference

After approval of submittals and before performing roofing and insulation

system installation work, hold a preroofing conference to review the following:

a. Drawings, specifications and submittals related to the roof work;

b. Roof system components installation;

c. Procedure for the roof manufacturer's technical representative's onsite inspection and acceptance of the roofing substrate, the name of the manufacturer's technical representatives, the frequency of the onsite visits, distribution of copies of the inspection reports from the manufacturer's technical representative;

d. Contractor's plan for coordination of the work of the various trades involved in providing the roofing system and other components secured to the roofing; and

e. Quality control plan for the roof system installation;

f. Safety requirements.

Coordinate preroofing conference scheduling with the Contracting Officer. The conference must be attended by the Contractor, the Contracting Officer's designated personnel, personnel directly responsible for the installation of roofing and insulation, flashing and sheet metal work, other trades interfacing with the roof work, and representative of the roofing materials manufacturer. Before beginning roofing work, provide a copy of meeting notes and action items to all attending parties. Note action items requiring resolution prior to start of roof work.

1.5 DELIVERY, STORAGE, AND HANDLING

1.5.1 Delivery

Deliver materials in their original, unopened containers or wrappings with labels intact and legible. Where materials are covered by a referenced specification number, the labels must bear the specification number, type, class, and shelf life expiration date where applicable. Deliver materials in sufficient quantity to allow continuity of work.

1.5.2 Storage

Store and protect materials from damage and weather in accordance with manufacturer's printed instructions, except as specified otherwise. Keep materials clean and dry. Store and maintain adhesives, sealants, primers and other liquid materials above 15 degrees C. Insulated hot boxes or other enclosed warming devices must be required in cold weather. Mark and remove damaged materials from the site. Use pallets to support and canvas tarpaulins to completely cover material materials stored outdoors. Do not use polyethylene as a covering. Locate materials temporarily stored on the roof in approved areas, and distribute the load to stay within the live load limits of the roof construction. Remove unused materials from the roof at the end of each days work.

1.5.3 Handling

Prevent damage to edges and ends of roll materials. Do not install damaged materials in the work. Select and operate material handling equipment so as not to damage materials or applied roofing. Do not use

materials contaminated by exposure or moisture. Remove contaminated materials from the site. When hazardous materials are involved, adhere to the special precautions of the manufacturer. Adhesives may contain petroleum distillates and may be extremely flammable; prevent personnel from breathing vapors, and do not use near sparks or open flame.

1.6 ENVIRONMENTAL REQUIREMENTS

Do not install EPDM sheet roofing during high winds or inclement weather, or when there is ice, frost, moisture, or visible dampness on the substrate surface, or when condensation develops on surfaces during application. Unless recommended otherwise by the EPDM sheet manufacturer and approved by the Contracting Officer, do not install EPDM sheet when air temperature is below 4 degrees C or within 3 degrees C of the dewpoint. Follow manufacturer's printed instructions for installation during cold weather conditions.

1.7 SEQUENCING

Coordinate the work with other trades to ensure that components which are to be secured to or stripped into the roofing system are available and that permanent flashing and counterflashing are installed as the work progresses. Ensure temporary protection measures are in place to preclude moisture intrusion or damage to installed materials. Coordinate roofing operations with insulation work so that all roof insulation applied each day is covered with roof membrane installation the same day.

1.8 WARRANTY

Provide roof system material and workmanship warranties meeting specified requirements. Provide revision or amendment to standard membrane manufacturer warranty as required to comply with the specified requirements. Minimum manufacturer warranty shall have no dollar limit, cover full system water-tightness, and shall have a minimum duration of 20 years.

1.8.1 Roof Membrane Manufacturer Warranty

Furnish the roof membrane manufacturer's 20 year no dollar limit roof system materials and installation workmanship warranty, including flashing, insulation, and accessories necessary for a watertight roof system construction. The warranty must run directly to the Government and commence at time of Government's acceptance of the roof work. The warranty must state that:

a. If within the warranty period the roof system, as installed for its intended use in the normal climatic and environmental conditions of the facility, becomes non-watertight, shows evidence of moisture intrusion within the assembly, splits, tears, cracks, delaminates, separates at the seams, shrinks to the point of bridging or tenting membrane at transitions, or shows evidence of excessive weathering due to defective materials or installation workmanship, the repair or replacement of the defective and damaged materials of the roof system assembly and correction of defective workmanship must be the responsibility of the roof membrane manufacturer. The roof membrane manufacturer is responsible for all costs associated with the repair or replacement work.

b. When the manufacturer or his approved applicator fail to perform the

repairs within 72 hours of notification, emergency temporary repairs performed by others does not void the warranty.

1.8.2 Roofing System Installer Warranty

The roof system installer must warrant for a period of two years that the roof system, as installed, is free from defects in installation workmanship, to include the roof membrane, flashing, insulation, accessories, attachments, and sheet metal installation integral to a complete watertight roof system assembly. Write the warranty directly to the Government. The roof system installer is responsible for correction of defective workmanship and replacement of damaged or affected materials. The roof system installer is responsible for all costs associated with the repair or replacement work.

1.8.3 Continuance of Warranty

Approve repair or replacement work that becomes necessary within the warranty period and accomplish in a manner so as to restore the integrity of the roof system assembly and validity of the roof membrane manufacturer warranty for the remainder of the manufacturer warranty period.

1.9 CONFORMANCE AND COMPATIBILITY

The entire roofing and flashing system must be in accordance with specified and indicated requirements, including fire and wind resistance requirements. Work not specifically addressed and any deviation from specified requirements must be in general accordance with recommendations of the NRCA RoofMan, membrane manufacturer published recommendations and details, ASTM D6369, and compatible with surrounding components and construction. Submit any deviation from specified or indicated requirements to the Contracting Officer for approval prior to installation.

1.10 SUSTAINABILITY REPORTING

Coordinate with Section 01 33 29 LEED(tm) DOCUMENTATION.

PART 2 PRODUCTS

2.1 MATERIALS

Coordinate with other specification sections related to the roof work. Furnish a combination of specified materials that comprise a roof system acceptable to the roof membrane manufacturer and meeting specified requirements. Protect materials provided from defects and make suitable for the service and climatic conditions of the installation.

2.1.1 EPDM Sheet

Ethylene Propylene Diene Terpolymer (EPDM), ASTM D4637/D4637M, Type I, non-reinforced, 2.3 mm nominal thickness for fully adhered application. The minimum thickness must not be less than minus 10 percent of the specified thickness value. EPDM membrane thickness specified is exclusive of backing material on the EPDM membrane. Principal polymer used in manufacture of the membrane sheet must be greater than 95 percent EPDM. Width and length of sheet must be as recommended by the manufacturer. Color, White.

2.1.2 Seam Tape

Double-sided synthetic rubber tape, minimum 0.76 mm thick, minimum75 mm wide. The roof membrane manufacturer must supply seam tape recommended by the manufacturer's printed data for forming watertight bond of EPDM sheet materials to each other for the application specified and conditions encountered. 150 mm wide tape is required for seam seals along lines of mechanical attachment of membrane.

2.1.3 Lap Splice Adhesive

Synthetic rubber adhesive as supplied by roof membrane manufacturer and recommended by the manufacturer's printed data for forming watertight bond of EPDM sheet membrane materials to each other in areas of membrane flashing. Do not use splice adhesive to form membrane seams in field of roof or at standard base flashing conditions.

2.1.4 Bonding Adhesive

Synthetic rubber adhesive as supplied by roof membrane manufacturer and recommended by the manufacturer's printed data for bonding EPDM membrane materials to insulation, wood, metal, concrete or other substrate materials. Do not use bonding adhesive to bond membrane materials to each other.

2.1.5 Lap Cleaner, Lap Sealant, and Edge Treatment

As supplied by the roof membrane manufacturer and recommended by the manufacturer's printed data.

2.1.6 Water Cutoff Mastic/Water Block

As supplied by the roof membrane manufacturer and recommended by the manufacturer's printed data.

2.1.7 Membrane Flashings and Flashing Accessories

Membrane flashing, including self-adhering membrane flashing, perimeter flashing, flashing around roof penetrations, and prefabricated pipe seals, must be minimum 1.1 mm minimum cured EPDM, as recommended by the roof membrane manufacturer or minimum 1.4 mm thick uncured EPDM sheet in compliance with ASTM D4811/D4811M, Type I. Use cured EPDM membrane to the maximum extent recommended by the roof membrane manufacturer. Limit uncured flashing material to reinforcing inside and outside corners and angle changes in plane of membrane, and to flash scuppers, pourable sealer pockets, and other formed penetrations or unusually shaped conditions as recommended by the roof membrane manufacturer where the use of cured material is impractical.

2.1.7.1 Flashing Tape

EPDM-backed synthetic rubber tape, minimum 150 mm wide as supplied by the roof membrane manufacturer and recommended by the manufacturer's printed data.

2.1.8 Membrane Fasteners and Plates

Coated, corrosion-resistant fasteners as recommended by the roof membrane manufacturer and meeting the requirements of FM 4470 and FM APP GUIDE for

Class I roof deck construction and the wind uplift resistance specified. As supplied and warranted for the substrate type(s) by EPDM sheet manufacturer and recommended by EPDM sheet manufacturer's printed data.

2.1.8.1 Stress Plates for Fasteners

Flat corrosion-resistant round stress plates as recommended by the roof membrane manufacturer's printed instructions and meeting the requirements of FM 4470; not less than 50 mm in diameter. Provide pre-formed discs to prevent dishing or cupping.

2.1.8.2 Auxiliary Fasteners

Corrosion resistance screws, nails, or anchors suitable for intended attachment purpose and as recommended by the roof membrane manufacturer.

2.1.8.3 Powder-Driven Fasteners

Powder-driven fasteners may be used only when approved in writing.

2.1.8.4 Metal Disks

Provide flat metal disks of minimum 25 mm in diameter. Metal disks must be of nonferrous material compatible with the nails or fasteners.

2.1.9 Pre-Manufactured Accessories

Pre-manufactured accessories must be manufacturer's standard for intended purpose, compatible with the membrane roof system and approved for use by the roof membrane manufacturer.

2.1.10 Roof Insulation Below EPDM Sheet

Insulation system and facer material must be compatible with membrane application specified and as approved by the roof membrane manufacturer.

2.1.11 Wood Products

Do not allow fire retardant treated materials be in contact with EPDM membrane or EPDM accessory products, unless approved by the membrane manufacturer and the Contracting Officer.

2.2 FLASHING CEMENT

Provide a self-vulcanizing butyl compound flashing cement for splicing laps and for flashings workable at minus 7 degrees C. Obtain a recommendation for such flashing cement from the roofing membrane manufacturer.

PART 3 EXECUTION

3.1 EXAMINATION

Ensure that the following conditions exist prior to application of the roofing materials:

a. Perimeter walls, roof penetrating components, and equipment supports are in place.

b. Surfaces are rigid, clean, dry, smooth, and free from cracks, holes, and sharp changes in elevation.

c. The plane of the substrate does not vary more than 6 mm within an area 3 by 3 meters when checked with a 3 meter straight edge placed anywhere on the substrate.

d. Substrate is sloped to provide positive drainage.

e. Walls and vertical surfaces are constructed to receive counterflashing, and will permit mechanical fastening of the base flashing materials.

f. Treated wood nailers are in place on non-nailable surfaces, to permit nailing of base flashing at minimum height of 200 mm above finished roofing surface.

g. Pressure-preservative treated wood nailers are fastened in place at eaves, gable ends, openings, and intersections with vertical surfaces for securing of membrane, edging strips, attachment flanges of sheet metal, and roof fixtures. Surface-applied nailers are the same thickness as the roof insulation.

h. Avoid contact of EPDM materials with fire retardant treated wood, except as approved by the roof membrane manufacturer and Contracting Officer.

i. Cants are securely fastened in place in the angles formed by walls and other vertical surfaces. The angle of the cant is 45 degrees and the height of the vertical leg is not less than 89 mm.

j. Venting is provided in accordance with the following:

(1) Edge Venting: Perimeter nailers are kerfed across the width of the nailers to permit escape of gaseous pressure at roof edges.

(2) Underside Venting: Vent openings are provided in steel form decking for cast-in-place concrete substrate.

(3) Vapor pressure relief vents: Holes equal to the outside diameter of vents are provided through the insulation where vents are required. Space vents in accordance with membrane manufacturer's recommendations.

k. Exposed nail heads in wood substrates are properly set. Warped and split boards have been replaced. There are no cracks or end joints 6 mm in width or greater.

l. Insulation boards are installed smoothly and evenly, and are not broken, cracked, or curled. There are no gaps in insulation board joints exceeding 6 mm in width. Insulation is being roofed over on the same day the insulation is installed.

3.2 APPLICATION

Apply entire EPDM sheet utilizing fully adhered application method. Apply roofing materials as specified herein unless approved otherwise by the Contracting Officer.

3.2.1 Special Precautions

a. Do not dilute coatings or sealants unless specifically recommended by the materials manufacturer's printed application instructions. Do not thin liquid materials with cleaners used for cleaning EPDM sheet.

b. Keep liquids in airtight containers, and keep containers closed except when removing materials.

c. Use liquid components, including adhesives, within their shelf life period. Store adhesives at 15 to 27 degrees C prior to use. Avoid excessive adhesive application and adhesive spills, as they can be destructive to some elastomeric sheets and insulations; follow adhesive manufacturer's printed application instructions. Mix and use liquid components in accordance with label directions and manufacturer's printed instructions.

d. Provide clean, dry cloths or pads for applying membrane cleaners and cleaning of membrane

e. Do not use heat guns or open flame to expedite drying of adhesives or primers.

f. Require workmen and others who walk on the membrane to wear clean, soft-soled shoes to avoid damage to roofing materials.

g. Do not use equipment with sharp edges which could puncture the EPDM sheet.

h. Shut down air intakes and any related mechanical systems and seal open vents and air intakes when applying solvent-based materials in the area of the opening or intake. Coordinate shutdowns with the Contracting Officer.

3.2.2 EPDM Sheet Roofing

Provide a watertight roof membrane sheet free of contaminants and defects that might affect serviceability. Provide a uniform, straight, and flat edge. Unroll EPDM sheet roofing in position without stretching membrane. Inspect for holes. Remove sections of EPDM sheet roofing that are damaged. Allow sheets to relax minimum 30 minutes before seaming. Lap sheets as specified, to shed water, and as recommended by the roof membrane manufacturer's published installation instructions for the application required but not less than 75 mm in any case.

3.2.3 Application Method

3.2.3.1 Fully Adhered Membrane Application

Layout membrane and side lap adjoining sheets in accordance with membrane manufacturer's printed installation instructions. Allow for sufficient membrane to form proper membrane terminations. Remove dusting agents and dirt from membrane and substrate areas where bonding adhesives are to be applied. Apply specified adhesive evenly and continuously to substrate and underside of sheets at rates recommended by the roof membrane manufacturer's printed application instructions. When adhesive is spray applied, roll with a paint roller to ensure proper contact and coverage. Do not apply bonding adhesive to surfaces of membrane in seam or lap areas. Allow adhesive to flash off or dry to consistency prescribed by

manufacturer before adhering sheets to the substrate. Roll each sheet into adhesive slowly and evenly to avoid wrinkles; broom or roll the membrane to remove air pockets and fishmouths and to ensure full, continuous bonding of sheet to substrate. Form field lap splices or seams as specified. Check all seams and ensure full lap seal. Apply lap sealant to all adhesive formed seams and all cut edges of reinforced membrane materials.

3.2.4 Tape Seams / Lap Splices

Field form seams, or lap splices, with seam tape in accordance with membrane manufacturer's printed instructions and as specified. Clean and prime mating surfaces in the seam area. After primer has dried or set in accordance with membrane manufacturer's instructions, apply seam tape to bottom membrane and roll with a 75 mm to 100 mm wide smooth silicone or steel hand roller, or other manufacturer approved rolling device, to ensure full contact and adhesion of tape to bottom membrane. Tape end laps must be minimum 25 mm. Roll top membrane into position to check for proper overlap and alignment. Remove release paper from top of seam tape and form seam splice. Ensure top membrane contact with seam tape as release paper is removed. Roll the closed seam with a smooth silicone or steel hand roller, rolling first across the width of the seam then along the entire length, being careful not to damage the membrane. Apply minimum 225 mm long strip of membrane-backed flashing tape over T-intersections of roof membrane. Roll tape to ensure full adhesion and seal over T-joint.

3.2.5 Adhesive Seams / Lap Splices

Use only field-applied adhesive formed seams in flashing areas where approved by the membrane manufacturer and the Contracting Officer. Do not use adhesive formed seams for field of roof membrane seaming. Thoroughly and completely clean mating surfaces of materials throughout the lap area. Remove all dirt, dust, and contaminants and allow to dry.

Apply primer as recommended by the membrane manufacturer. Apply splice adhesive with a 75 mm to 100 mm wide, 13 mm thick, solvent-resistant brush in a smooth, even coat with long brush strokes. Bleed out brush marks. Do not apply adhesive in a circular motion. Simultaneously apply adhesive to both mating surfaces in an approximate 0.63 mm to 0.75 mm wet film thickness, or other thickness as recommended by the roof membrane manufacturer's printed instructions.

Allow the splice adhesive to set-up in accordance with membrane manufacturer's printed instructions. Perform manufacturer recommended field check to test for adhesive readiness prior to closing seam. Apply a 3 mm to 6 mm bead of in-seam sealant approximately 13 mm from the inside edge of the lower membrane sheet prior to closing the seam. Ensure the in-seam sealant does not extend onto the splice adhesive. Maintain the full adhered seam width required. Roll the top membrane onto the mating surface. Roll the seam area with a 50 mm to 75 mm wide, smooth silicone or steel hand roller. A minimum of 2 hours after joining sheets and when the lap edge is dry, clean the lap edge with membrane manufacturer's recommended cleaner and apply a 6mm to 9 mm bead of lap sealant centered on the seam edge. With a feathering tool, immediately feather the lap sealant to completely cover the splice edge, leaving a mound of sealant over the seam edge. Apply lap sealant to all adhesive formed seams.

3.2.6 Perimeter Attachment

Adhesive bond or mechanically secure roof membrane sheet at roof perimeter in a manner to comply with wind resistance requirements and in accordance with membrane manufacturer's printed application instructions. When adhesively bonding a mechanically fastened system in perimeter areas, the perimeter boundary of the adhesive bond must be the same as the boundary required for additional perimeter mechanical fastening to meet wind resistance requirements.

3.2.7 Securement at Base Tie-In Conditions

Mechanically fasten the roof membrane at penetrations, at base of curbs and walls, and at all locations where the membrane turns and angle greater than 4 degrees (1:12). Space fasteners a maximum of 300 mm on center, except where more frequent attachment is required to meet specified wind resistance or where recommended by the roof membrane manufacturer. Flash over fasteners with a fully adhered layer of material as recommended by the roof membrane manufacturer's printed data.

3.3 FLASHINGS

3.3.1 General

Provide flashings in the angles formed at walls and other vertical surfaces and where required to make the work watertight, except where metal flashings are indicated.

Provide a one-ply flashing membrane, as specified for the system used, and install immediately after the roofing membrane is placed and prior to finish coating where a finish coating is required. Flashings must be stepped where vertical surfaces abut sloped roof surfaces. Provide sheet metal reglet in which sheet metal cap flashings are installed of not more than 400 mm nor less than 200 mm above the roofing surfaces. Exposed joints and end laps of flashing membrane must be made and sealed in the manner required for roofing membrane.

3.3.2 Membrane Flashing

Install flashing and flashing accessories as the roof membrane is installed. Apply flashing to cleaned surfaces and as recommended by the roof membrane manufacturer and as specified. Utilize cured EPDM membrane flashing and prefabricated accessory flashings to the maximum extent recommended by the roof membrane manufacturer. Limit uncured flashing material to reinforcing inside and outside corners and angle changes in plane of membrane, and to flashing scuppers, pourable sealer pockets, and other formed penetrations or unusually shaped conditions as recommended by the roof membrane manufacturer where the use of cured material is impractical. Extend base flashing not less than 200 mm above roofing surface and as necessary to provide for seaming overlap on roof membrane as recommended by the roof membrane manufacturer.

Seal flashing membrane for a minimum of 75 mm on each side of fastening device used to anchor roof membrane to nailers. Completely adhere flashing sheets in place. Seam flashing membrane in the same manner as roof membrane, except as otherwise recommended by the membrane manufacturer's printed instructions and approved by the Contracting Officer. Reinforce all corners and angle transitions by applying uncured membrane to the area in accordance with roof membrane manufacturer

recommendations. Mechanically fasten top edge of base flashing with manufacturer recommended termination bar fastened at maximum 300 mm on center. Install sheet metal flashing over the termination bar in the completed work. Mechanically fasten top edge of base flashing for all other terminations in a manner recommended by the roof membrane manufacturer. Apply membrane liner over top of exposed nailers and blocking and to overlap top edge of base flashing installation at curbs, parapet walls, expansion joints and as otherwise indicated to serve as waterproof lining under sheet metal flashing components.

3.3.3 PRE-FABRICATED CURBS

Securely anchor prefabricated curbs to nailer or other base substrate and flashed with EPDM membrane flashing materials.

3.3.4 Set-On Accessories

Where pipe or conduit blocking, supports and similar roof accessories, or isolated paver block, are set on the membrane, adhere reinforced membrane or walkpad material, as recommended by the roof membrane manufacturer, to bottom of accessories prior to setting on roofing membrane. Specific method of installing set-on accessories must permit normal movement due to expansion, contraction, vibration, and similar occurrences without damaging roofing membrane. Do not mechanically secure set-on accessories through roofing membrane into roof deck substrate.

3.3.5 Lightning Protection

Flash lightning protection system components or attach to the roof membrane in a manner acceptable to the roof membrane manufacturer.

3.4 CORRECTION OF DEFICIENCIES

Where any form of deficiency is found, additional measures must be taken as deemed necessary by the Contracting Officer to determine the extent of the deficiency and corrective actions must be as directed by the Contracting Officer.

3.5 CLEAN UP

Remove debris, scraps, containers and other rubbish and trash resulting from installation of the roofing system from job site each day.

3.6 PROTECTION OF APPLIED ROOFING

At the end of the day's work and when precipitation is imminent, protect applied membrane roofing system from water intrusion.

3.6.1 Water Cutoffs

Straighten insulation line using loose-laid cut insulation sheets and seal the terminated edge of the roof membrane system in an effective manner. Remove the water cut-offs to expose the insulation when resuming work, and remove the insulation sheets used for fill-in.

3.6.2 Temporary Flashing for Permanent Roofing

Provide temporary flashing at drains, curbs, walls and other penetrations and terminations of roofing sheets until permanent flashings can be

applied. Remove temporary flashing before applying permanent flashing.

3.6.3 Temporary Walkways, Runways, and Platforms

Do not permit storing, walking, wheeling, and trucking directly on applied roofing materials. Provide temporary walkways, runways, and platforms of smooth clean boards, mats or planks as necessary to avoid damage to applied roofing materials, and to distribute weight to conform to live load limits of roof construction. Use rubber-tired equipment for roofing work.

3.7 FIELD QUALITY CONTROL

3.7.1 Construction Monitoring

During progress of the roof work, Contractor must make visual inspections as necessary to ensure compliance with specified parameters. Additionally, verify the following:

a. Equipment is in working order. Metering devices are accurate.

b. Materials are not installed in adverse weather conditions.

c. Substrates are in acceptable condition, in compliance with specification, prior to application of subsequent materials.

Nailers and blocking are provided where and as needed.

Insulation substrate is smooth, properly secured to its substrate, and without excessive gaps prior to membrane application.

The proper number, type, and spacing of fasteners are installed.

Materials comply with the specified requirements.

All materials are properly stored, handled and protected from moisture or other damages. Liquid components are properly mixed prior to application.

Membrane is allowed to relax prior to seaming. Adhesives are applied uniformly to both mating surfaces and checked for proper set prior to bonding mating materials. Mechanical attachments are spaced as required, including additional fastening of membrane in corner and perimeter areas as required.

Membrane is properly overlapped.

Membrane seaming is as specified and seams are hand rolled to ensure full adhesion and bond width. All seams are checked at the end of each work day.

Applied membrane is inspected and repaired as necessary prior to ballast installation.

Membrane is fully adhered without ridges, wrinkles, kinks, fishmouths.

Installer adheres to specified and detailed application parameters.

Associated flashings and sheet metal are installed in a timely manner

in accord with the specified requirements.

Temporary protection measures are in place at the end of each work shift.

3.8 INSTRUCTIONS TO GOVERNMENT PERSONNEL

Furnish written and verbal instructions on proper maintenance procedures to designated Government personnel. Furnish instructions by a competent representative of the roof membrane manufacturer and include a minimum of 4 hours on maintenance and emergency repair of the membrane. Include a demonstration of membrane repair, and give sources of required special tools. Furnish information on safety requirements during maintenance and emergency repair operations.

3.9 INFORMATION CARD

For each roof, furnish a typewritten information card for facility records anda photoengraved 1 mm thick aluminum card for exterior display. Card must be 215 mm by 275 mm minimum. Information card must identify facility name and number; location; contract number; approximate roof area; detailed roof system description, including deck type, membrane, number of plies, method of application, manufacturer, insulation and cover board system and thickness; presence of tapered insulation for primary drainage, presence of vapor retarder; date of completion; installing contractor identification and contact information; membrane manufacturer warranty expiration, warranty reference number, and contact information. Install card at roof top or access location as directed by the Contracting Officer and provide a paper copy to the Contracting Officer.

-- End of Section --

SECTION 07 60 00

FLASHING AND SHEET METAL
08/08

PART 1 GENERAL

1.1 REFERENCES

The publications listed below form a part of this specification to the extent referenced. The publications are referred to within the text by the basic designation only.

AMERICAN WELDING SOCIETY (AWS)

AWS D1.2/D1.2M	(2014) Structural Welding Code - Aluminum

ASTM INTERNATIONAL (ASTM)

ASTM B209M	(2014) Standard Specification for Aluminum and Aluminum-Alloy Sheet and Plate (Metric)
ASTM D41/D41M	(2011) Asphalt Primer Used in Roofing, Dampproofing, and Waterproofing
ASTM D4586/D4586M	(2007; E 2012; R 2012) Asphalt Roof Cement, Asbestos-Free

1.2 GENERAL REQUIREMENTS

Finished sheet metalwork will form a weathertight construction without waves, warps, buckles, fastening stresses or distortion, which allows for expansion and contraction. Sheet metal mechanic is responsible for cutting, fitting, drilling, and other operations in connection with sheet metal required to accommodate the work of other trades. Coordinate installation of sheet metal items used in conjunction with roofing with roofing work to permit continuous roofing operations.

1.3 SUBMITTALS

Government approval is required for submittals with a "G" designation; submittals not having a "G" designation are for Contractor Quality Control approval. Submittals with an "S" are for inclusion in the Sustainability Notebook, in conformance to Section 01 33 29 SUSTAINABILITY REPORTING. Submit the following in accordance with Section 01 33 00 SUBMITTAL PROCEDURES:

SD-02 Shop Drawings

Covering on flat, sloped, or curved surfaces; G

Gutters; G

Downspouts; G

Gravel stops and fascias; G

Counterflashing; G

Flashing at roof penetrations; G

Reglets; G

Drip edge; G

Indicate thicknesses, dimensions, fastenings and anchoring methods, expansion joints, and other provisions necessary for thermal expansion and contraction. Scaled manufacturer's catalog data may be submitted for factory fabricated items.

SD-11 Closeout Submittals

Quality Control Plan

Submit for sheet metal work in accordance with paragraph entitled "Field Quality Control."

1.4 DELIVERY, HANDLING, AND STORAGE

Package and protect materials during shipment. Uncrate and inspect materials for damage, dampness, and wet-storage stains upon delivery to the job site. Remove from the site and replace damaged materials that cannot be restored to like-new condition. Handle sheet metal items to avoid damage to surfaces, edges, and ends. Store materials in dry, weather-tight, ventilated areas until immediately before installation.

PART 2 PRODUCTS

2.1 MATERIALS

Do not use lead, lead-coated metal, or galvanized steel. Use any metal listed by SMACNA Arch. Manual for a particular item, unless otherwise specified or indicated. Conform to the requirements specified and to the thicknesses and configurations established in SMACNA Arch. Manual for the materials. Different items need not be of the same metal, except that if copper is selected for any exposed item, all exposed items must be copper.

Furnish sheet metal items in 2400 to 3000 mm lengths. Single pieces less than 2400 mm long may be used to connect to factory-fabricated inside and outside corners, and at ends of runs. Factory fabricate corner pieces with minimum 300 mm legs. Provide accessories and other items essential to complete the sheet metal installation. Provide accessories made of the same or compatible materials as the items to which they are applied. Fabricate sheet metal items of the materials specified below and to the gage, thickness, or weight shown in Table I at the end of this section. Provide sheet metal items with mill finish unless specified otherwise. Where more than one material is listed for a particular item in Table I, each is acceptable and may be used except as follows:

2.1.1 Exposed Sheet Metal Items

Must be of the same material. Consider the following as exposed sheet metal: gutters, including hangers; downspouts; gravel stops and fascias; cap, valley, steeped, base, and eave flashings and related accessories.

2.1.2 Drainage

Do not use copper for an exposed item if drainage from that item will pass over exposed masonry, stonework or other metal surfaces. In addition to the metals listed in Table I, lead-coated copper may be used for such items.

2.1.3 Aluminum Alloy Sheet and Plate

ASTM B209M color as indicated, form alloy, and temper appropriate for use.

2.1.3.1 Finish

Exposed exterior sheet metal items of aluminum must have a baked-on, factory-applied color coating of polyvinylidene fluoride (PVF2) or other equivalent fluorocarbon coating applied after metal substrates have been cleaned and pretreated. Provide finish coating dry-film thickness of 0.020 to 0.033 mm and color as indicated.

2.1.4 Bituminous Plastic Cement

ASTM D4586/D4586M, Type I.

2.1.5 Asphalt Primer

ASTM D41/D41M.

2.1.6 Fasteners

Use the same metal or a metal compatible with the item fastened. Use stainless steel fasteners to fasten dissimilar materials.

PART 3 EXECUTION

3.1 INSTALLATION

3.1.1 Cleats

Provide cleats for sheet metal 450 mm and over in width. Space cleats evenly not over 300 mm on center unless otherwise specified or indicated. Unless otherwise specified, provide cleats of 50 mm wide by 75 mm long and of the same material and thickness as the sheet metal being installed. Secure one end of the cleat with two nails and the cleat folded back over the nailheads. Lock the other end into the seam. Where the fastening is to be made to concrete or masonry, use screws and drive in expansion shields set in concrete or masonry. Pretin cleats for soldered seams.

3.1.2 Bolts, Rivets, and Screws

Install bolts, rivets, and screws where indicated or required. Provide compatible washers where required to protect surface of sheet metal and to provide a watertight connection. Provide mechanically formed joints in aluminum sheets 1.0 mm or less in thickness.

3.1.3 Seams

Straight and uniform in width and height with no solder showing on the face.

3.1.3.1 Flat-lock Seams

Finish not less than 20 mm wide.

3.1.3.2 Lap Seams

Finish soldered seams not less than 25 mm wide. Overlap seams not soldered, not less than 75 mm.

3.1.3.3 Loose-Lock Expansion Seams

Not less than 75 mm wide; provide minimum 25 mm movement within the joint. Completely fill the joints with the specified sealant, applied at not less than 3 mm thick bed.

3.1.4 Soldering

Where soldering is specified, apply to copper, terne-coated stainless steel, zinc-coated steel, and stainless steel items. Pretin edges of sheet metal before soldering is begun. Seal the joints in aluminum sheets of 0.040 inch or less in thickness with specified sealants. Do not solder aluminum.

3.1.4.1 Edges

Scrape or wire-brush the edges of lead-coated material to be soldered to produce a bright surface. Flux brush the seams in before soldering. Treat with soldering acid flux the edges of stainless steel to be pretinned. Seal the joints in aluminum sheets of one mm or less in thickness with specified sealants. Do not solder aluminum.

3.1.5 Welding and Mechanical Fastening

Use welding for aluminum of thickness greater than one mm. Aluminum one mm or less in thickness must be butted and the space backed with formed flashing plate; or lock joined, mechanically fastened, and filled with sealant as recommended by the aluminum manufacturer.

3.1.5.1 Welding of Aluminum

Use welding of the inert gas, shield-arc type. For procedures, appearance and quality of welds, and the methods used in correcting welding work, conform to AWS D1.2/D1.2M.

3.1.5.2 Mechanical Fastening of Aluminum

Use No. 12, aluminum alloy, sheet metal screws or other suitable aluminum alloy or stainless steel fasteners. Drive fasteners in holes made with a No. 26 drill in securing side laps, end laps, and flashings. Space fasteners 300 mm maximum on center. Where end lap fasteners are required to improve closure, locate the end lap fasteners not more than 50 mm from the end of the overlapping sheet.

3.1.6 Protection from Contact with Dissimilar Materials

3.1.6.1 Copper or Copper-bearing Alloys

Paint with heavy-bodied bituminous paint surfaces in contact with

dissimilar metal, or separate the surfaces by means of moistureproof building felts.

3.1.6.2 Aluminum

Do not allow aluminum surfaces in direct contact with other metals except stainless steel, zinc, or zinc coating. Where aluminum contacts another metal, paint the dissimilar metal with a primer followed by two coats of aluminum paint. Where drainage from a dissimilar metal passes over aluminum, paint the dissimilar metal with a non-lead pigmented paint.

3.1.6.3 Metal Surfaces

Paint surfaces in contact with mortar, concrete, or other masonry materials with alkali-resistant coatings such as heavy-bodied bituminous paint.

3.1.6.4 Wood or Other Absorptive Materials

Paint surfaces that may become repeatedly wet and in contact with metal with two coats of aluminum paint or a coat of heavy-bodied bituminous paint.

3.1.7 Expansion and Contraction

Provide expansion and contraction joints at not more than 9750 mm intervals for aluminum and at not more than 12 meter intervals for other metals. Provide an additional joint where the distance between the last expansion joint and the end of the continuous run is more than half the required interval. Space joints evenly. Join extruded aluminum gravel stops and fascias by expansion and contraction joints spaced not more than 3600 mm apart.

3.1.8 Counterflashing

Except where indicated or specified otherwise, insert counterflashing in reglets located from 230 to 250 mm above roof decks, extend down vertical surfaces over upturned vertical leg of base flashings not less than 75 mm. Fold the exposed edges of counterflashings 13 mm. Where stepped counterflashings are required, they may be installed in short lengths a minimum 8 inch by 8 inch or may be of the preformed one-piece type. Provide end laps in counterflashings not less than 75 mm and make it weathertight with plastic cement. Do not make lengths of metal counterflashings exceed 3000 mm. Form the flashings to the required shapes before installation. Factory-form the corners not less than 300 mm from the angle. Secure the flashings in the reglets with lead wedges and space not more than450 mm apart; on short runs, place wedges closer together. Fill caulked-type reglets or raked joints which receive counterflashing with caulking compound. Turn up the concealed edge of counterflashings built into masonry or concrete walls not less than 6 mm and extend not less than 50 mm into the walls. Install counterflashing to provide a spring action against base flashing. Where bituminous base flashings are provided, extend down the counter flashing as close as practicable to the top of the cant strip. Factory form counter flashing to provide spring action against the base flashing.

3.1.9 Metal Reglets

Provide factory fabricated caulked type or friction type reglets with a

minimum opening of 6 mm and a depth of 30 mm, as approved.

3.1.9.1 Caulked Reglets

Provide with rounded edges and metal strap brackets or other anchors for securing to the concrete forms. Provide reglets with a core to protect them from injury during the installation. Provide built-up mitered corner pieces for internal and external angles. Wedge the flashing in the reglets with lead wedges every 450 mm, caulked full and solid with an approved compound.

3.1.9.2 Friction Reglets

Provide with flashing receiving slots not less than 16 mm deep, 25 mm jointing tongues, and upper and lower anchoring flanges installed at 24 inch maximum snaplock receiver. Insert the flashing the full depth of the slot and lock by indentations made with a dull-pointed tool, wedges, and filled with a sealant. For friction reglets, install flashing snaplock receivers at 24 inch on center maximum. When the flashing has been inserted the full depth, caulk the slot and lock with wedges and fill with sealant.

3.1.10 Gravel Stops and Fascias

Prefabricate in the shapes and sizes indicated and in lengths not less that 2400 mm. Extend flange at least 100 mm onto roofing. Provide prefabricated, mitered corners internal and external corners. Install gravel stops and fascias after all plies of the roofing membrane have been applied, but before the flood coat of bitumen is applied. Prime roof flange of gravel stops and fascias on both sides with an asphalt primer. After primer has dried, set flange on roofing membrane and strip-in.Nail flange securely to wood nailer with large-head, barbed-shank roofing nails 38 mm long spaced not more than 75 mm on center, in two staggered rows.

3.1.10.1 Edge Strip

Hook the lower edge of fascias at least 20 mm over a continuous strip of the same material bent outward at an angle not more than 45 degrees to form a drip. Nail hook strip to a wood nailer at 150 mmmaximum on center. Where fastening is made to concrete or masonry, use screws spaced 300 mm on center driven in expansion shields set in the concrete or masonry. Where horizontal wood nailers are slotted to provide for insulation venting, install strips to prevent obstruction of vent slots. Where necessary, install strips over 2 mm thick compatible spacer or washers.

3.1.10.2 Joints

Leave open the section ends of gravel stops and fascias 6 mm and backed with a formed flashing plate, mechanically fastened in place and lapping each section end a minimum of 100 mm set laps in plastic cement. Face nailing will not be permitted. Install prefabricated aluminum gravel stops and fascias in accordance with the manufacturer's printed instructions and details.

3.1.11 Metal Drip Edge

Provide a metal drip edge, designed to allow water run-off to drip free of underlying construction, at eaves and rakes prior to the application of

roofing shingles. Apply directly on the wood deck at the eaves and over the underlay along the rakes. Extend back from the edge of the deck not more than 75 mm and secure with compatible nails spaced not more than250 mm on center along upper edge.

3.1.12 Gutters At Pumphouses

The hung type of shape indicated and supported on underside by brackets that permit free thermal movement of the gutter. Provide gutters in sizes indicated complete with mitered corners, end caps, outlets, brackets, and other accessories necessary for installation. Bead with hemmed edge or reinforce the outer edge of gutter with a stiffening bar not less than 20 by 5 mm of material compatible with gutter. Fabricate gutters in sections not less than 2400 mm. Lap the sections a minimum of 25 mm in the direction of flow or provide with concealed splice plate 150 mm minimum. Join the gutters, other than aluminum, by riveted and soldered joints. Join aluminum gutters with riveted sealed joints. Provide expansion-type slip joints midway between outlets. Install gutters below slope line of the roof so that snow and ice can slide clear. Support gutters on by continuous cleats. Adjust gutters to slope uniformly to outlets, with high points occurring midway between outlets. Fabricate hangers and fastenings from metals.

3.1.13 Downspouts At Pumphouses

Space supports for downspouts according to the manufacturer's recommendation for the masonry substrate. Types, shapes and sizes are indicated. Provide complete including elbows and offsets. Provide downspouts in approximately 3000 mm lengths. Provide end joints to telescope not less than 13 mm and lock longitudinal joints. Provide gutter outlets with wire ball strainers for each outlet. Provide strainers to fit tightly into outlets and be of the same material used for gutters. Keep downspouts not less than 25 mm away from walls. Fasten to the walls at top, bottom, and at an intermediate point not to exceed 1500 mm on center with leader straps or concealed rack-and-pin type fasteners. Form straps and fasteners of metal compatible with the downspouts.

3.1.13.1 Terminations

Neatly fit into the drainage connection the downspouts terminating in drainage lines and fill the joints with a portland cement mortar cap sloped away from the downspout. Provide downspouts terminating in splash blocks with elbow-type fittings. Provide splash pans as specified.

3.1.14 Sheet Metal Covering on Flat, Sloped, or Curved Surfaces

Except as specified or indicated otherwise, cover and flash all minor flat, sloped, or curved surfaces such as crickets, bulkheads, dormers and small decks with metal sheets of the material used for flashing; maximum size of sheets, 375 by 455 mm. Fasten sheets to sheathing with metal cleats. Lock seams and solder. Lock aluminum seams as recommended by aluminum manufacturer. Provide an underlayment of roofing felt for all sheet metal covering.

3.1.15 Flashing at Roof Penetrations and Equipment Supports

Provide metal flashing for all pipes, ducts, and conduits projecting through the roof surface and for equipment supports, guy wire anchors, and similar items supported by or attached to the roof deck.

3.1.16 Single Pipe Vents

Use pre-fabricated pipe boot as shown on drawings. Seal the area of hood in contact with vent pipe with an approved sealant.

3.2 PAINTING

Field-paint sheet metal for separation of dissimilar materials.

3.2.1 Aluminum Surfaces

Shall be solvent cleaned and given one coat of zinc-molybdate primer and one coat of aluminum paint.

3.3 CLEANING

Clean exposed sheet metal work at completion of installation. Remove grease and oil films, handling marks, contamination from steel wool, fittings and drilling debris, and scrub-clean. Free the exposed metal surfaces of dents, creases, waves, scratch marks, and solder or weld marks.

3.4 REPAIRS TO FINISH

Scratches, abrasions, and minor surface defects of finish may be repaired in accordance with the manufacturer's printed instructions and as approved. Repair damaged surfaces caused by scratches, blemishes, and variations of color and surface texture. Replace items which cannot be repaired.

3.5 FIELD QUALITY CONTROL

Establish and maintain a Quality Control Plan for sheet metal used in conjunction with roofing to assure compliance of the installed sheet metalwork with the contract requirements. Remove work that is not in compliance with the contract and replace or correct. Include quality control, but not be limited to, the following:

a. Observation of environmental conditions; number and skill level of sheet metal workers; condition of substrate.

b. Verification that specified material is provided and installed.

c. Inspection of sheet metalwork, for proper size(s) and thickness(es), fastening and joining, and proper installation.

3.5.1 Procedure

Submit for approval prior to start of roofing work. Include a checklist of points to be observed. Document the actual quality control observations and inspections. Furnish a copy of the documentation to the Contracting Officer at the end of each day.

TABLE I. SHEET METAL WEIGHTS, THICKNESSES, AND GAGES	
Sheet Metal Items	Aluminum, mm
Downspouts and leaders (at pumphouse)	0.81
Downspout clips and anchors (at pumphouse)	1.02 clip 3.175 anchor
Downspout straps, 50 mm (at pumphouse)	1.52
Gravel stops and fascias:	
Extrusions	1.91
Edge strip	1.27
Gutters: (at pumphouse)	
Gutter section (at pumphouse)	0.81
Continuous cleat	0.81
Hangers, dimensions	25 mm by 2 mm (c)
Reglets	-

TABLE II. SHEET METAL JOINTS		
TYPE OF JOINT		
Item Designation	Aluminum	Remarks
Flashings		
Cap-in reglet	75 mm lap	Seal groove with joint sealing compound.

TABLE II. SHEET METAL JOINTS		
TYPE OF JOINT		
Item Designation	Aluminum	Remarks
Reglets	--	Seal reglet groove with joint sealing compound.
Eave	25 mm flat locked, locked, cleated 25 mm loose locked, sealed expansion joints, cleated	Same as base flashing.
Stepped	75 mm lap	--
Valley	150 mm lap cleated	--
Edge strip	Butt	--
Gravel stops:		
Extrusions	Butt with 13 mm space	Use sheet flashing beneath and a cover plate
Sheet, smooth	Butt with 6 mm space	Use sheet flashing backup plate.
Sheet, corrugated	Butt with 6 mm space	Use sheet flashing beneath and a cover plate or a combination unit
Gutters	25 mm flat locked riveted and sealed	Aluminum producers recommended hard setting sealant for locked aluminum joints.
(a) Provide a 75 mm lap elastomeric flashing with manufacturer's recommended sealant.		
(b) Seal Polyvinyl chloride reglet with manufacturer's recommended sealant.		

-- End of Section --

THIS PAGE HAS BEEN INTENTIONALLY LEFT BLANK

SECTION 07 61 14.00 20

STEEL STANDING SEAM ROOFING
05/11

PART 1 GENERAL

1.1 REFERENCES

The publications listed below form a part of this specification to the extent referenced. The publications are referred to within the text by the basic designation only.

AMERICAN IRON AND STEEL INSTITUTE (AISI)

AISI SG03-3	(2002; Suppl 2001-2004; R 2008) Cold-Formed Steel Design Manual Set

ASTM INTERNATIONAL (ASTM)

ASTM A1008/A1008M	(2013) Standard Specification for Steel, Sheet, Cold-Rolled, Carbon, Structural, High-Strength Low-Alloy and High-Strength Low-Alloy with Improved Formability, Solution Hardened, and Bake Hardened
ASTM A1011/A1011M	(2014) Standard Specification for Steel, Sheet, and Strip, Hot-Rolled, Carbon, Structural, High-Strength Low-Alloy and High-Strength Low-Alloy with Improved Formability and Ultra-High Strength
ASTM A653/A653M	(2013) Standard Specification for Steel Sheet, Zinc-Coated (Galvanized) or Zinc-Iron Alloy-Coated (Galvannealed) by the Hot-Dip Process
ASTM B117	(2011) Standard Practice for Operating Salt Spray (Fog) Apparatus
ASTM D1654	(2008) Evaluation of Painted or Coated Specimens Subjected to Corrosive Environments
ASTM D2244	(2014) Calculation of Color Tolerances and Color Differences from Instrumentally Measured Color Coordinates
ASTM D2247	(2011) Testing Water Resistance of Coatings in 100% Relative Humidity
ASTM D4214	(2007) Standard Test Method for Evaluating the Degree of Chalking of Exterior Paint Films
ASTM D522/D522M	(2014) Mandrel Bend Test of Attached Organic Coatings

ASTM D714	(2002; R 2009) Evaluating Degree of Blistering of Paints
ASTM D968	(2005; R 2010) Abrasion Resistance of Organic Coatings by Falling Abrasive
ASTM E1592	(2005; R 2012) Structural Performance of Sheet Metal Roof and Siding Systems by Uniform Static Air Pressure Difference
ASTM G152	(2013) Operating Open Flame Carbon Arc Light Apparatus for Exposure of Nonmetallic Materials
ASTM G153	(2013) Operating Enclosed Carbon Arc Light Apparatus for Exposure of Nonmetallic Materials

SHEET METAL AND AIR CONDITIONING CONTRACTORS' NATIONAL ASSOCIATION (SMACNA)

SMACNA 1793	(2012) Architectural Sheet Metal Manual, 7th Edition

1.2 DEFINITIONS

1.2.1 Field-Formed Seam

Seams of panels so configured that when adjacent sheets are installed the seam is sealed utilizing mechanical or hand seamers. Crimped (45 degree bend), roll formed (180 degree bend), double roll formed (2 - 180 degree bends), and roll and lock systems are types of field-formed seam systems.

1.2.2 Snap Together Seam

Panels so configured that the male and female portions of the seam interlock through the application of foot pressure or tamping with a mallet. Snap-on cap configurations are a type of snap together system.

1.2.3 Pre-Formed

Formed to the final, less field-formed seam, profile and configuration in the factory.

1.2.4 Field-Formed

Formed to the final, less field-formed seam, profile and configuration at the site of work prior to installation.

1.2.5 Roofing System

The roofing system is defined as the assembly of roofing components, including roofing panels, flashing, fasteners, and accessories which, when assembled properly result in a watertight installation.

1.3 SYSTEM DESCRIPTION

1.3.1 Design Requirements

a. Panels shall be continuous lengths up to manufacturer's standard longest lengths, with no joints or seams, except where indicated or specified. Ribs of adjoining sheets shall be in continuous contact from eave to ridge. Individual panels of snap together type systems shall be removable for replacement of damaged material.

b. There shall be no exposed or penetrating fasteners except where shown on approved shop drawings. Fasteners into steel shall be stainless steel, zinc cast head, or cadmium plated steel screws inserted into predrilled holes. There shall be a minimum of two fasteners per clip. Single fasteners will be allowed when supporting structural members are prepunched or predrilled.

c. Snap together type systems shall have a capillary break and a positive side lap locking device. Field-formed seam type systems shall be mechanically locked closed by the manufacturer's locking tool. The seam shall include a continuous factory applied sealant when required by the manufacturer to withstand the wind loads specified.

d. Roof panel anchor clips shall be concealed and designed to allow for longitudinal thermal movement of the panels, except where specific fixed points are indicated. Provide for lateral thermal movement in panel configuration or with clips designed for lateral and longitudinal movement.

1.3.2 Design Conditions

The system shall be designed to resist positive and negative loads specified herein in accordance with the AISI SG03-3. Panels shall support walking loads without permanent distortion or telegraphing of the structural supports.

1.3.2.1 Wind Uplift

The design uplift pressures for the roof system shall be computed and applied using a basic wind speed of 196 kilometers per hour (km/h).Roof system and attachments shall resist the following wind loads, in kilopascals (kPa):

	Negative
a. At eaves	2.5
b. At rakes	2.5
c. At ridge	2.5
d. At building corners	4.0
e. At central areas	1.6

The design uplift force for each connection assembly shall be that pressure given for the area under consideration, multiplied by the tributary load area of the connection assembly, and multiplied by the

appropriate factor of safety, as follows:

a. Single fastener in a connection: 3.0

b. Two or more fasteners in each connection: 2.25

1.3.2.2 Roof Live Loads

Loads shall be applied on the horizontal projection of the roof structure. The minimum roof design live load shall be one kPa.

1.3.2.3 Thermal Movement

System shall be capable of withstanding thermal movement based on a temperature range of 5 degrees C to 60 degrees C.

1.3.2.4 Deflection

Panels shall be capable of supporting design loads between unsupported spans with deflection of not greater than L/180 of the span.

1.3.3 Structural Performance

The structural performance test methods and requirements of the Standing Seam Roofing Systems (SSRS) shall be in accordance with ASTM E1592.

1.4 SUBMITTALS

Government approval is required for submittals with a "G" designation; submittals not having a "G" designation are for Contractor Quality Control approval. Submittals with an "S" are for inclusion in the Sustainability Notebook, in conformance to Section 01 33 29SUSTAINABILITY REQUIREMENTS. Submit the following in accordance with Section 01 33 00 SUBMITTAL PROCEDURES:

SD-02 Shop Drawings

Roofing; G

Submit roofing drawings to supplement the instructions and diagrams. Drawings shall include design and erection drawings containing an isometric view of the roof showing the design uplift pressures and dimensions of edge, ridge and corner zones; and show typical and special conditions including flashings, materials and thickness, dimensions, fixing lines, anchoring methods, sealant locations, sealant tape locations, fastener layout, sizes, and spacing, terminations, penetrations, attachments, and provisions for thermal movement. Details of installation shall be in accordance with the manufacturer's Standard Instructions and details or the SMACNA 1793. Prior to submitting shop drawings, have drawings reviewed and approved by the manufacturer's technical engineering department.

SD-03 Product Data

Roofing panels; G

Attachment clips; G

Closures; G

Accessories; G

Fasteners; G

Sealants; G

Sample warranty certificate; G

Submit for materials to be provided. Submit data sufficient to indicate conformance to specified requirements.

SD-04 Samples

Roofing panel

For color selection, submit 50 by 100 mm metal samples in color, finish and texture specified.

SD-05 Design Data

Design calculations

SD-06 Test Reports

Structural performance tests

Finish tests

SD-07 Certificates

Statement of Installer's Qualifications

Submit documentation from roofing manufacturer proving the manufacturer's technical representative meets below specified requirements. Include name, address, telephone number, and experience record.

Submit documentation proving the installer is factory-trained, has the specified experience, and authorized by the manufacturer to install the products specified.

Coil stock compatibility; G

Provide certification of coil compatibility with roll forming machinery to be used for forming panels without warping, waviness, and rippling not part of panel profile; to be done without damage, abrasion or marking of finish coating.

SD-08 Manufacturer's Instructions

Installation manual; G

Submit manufacturers printed installation manual, instructions, and standard details.

SD-11 Closeout Submittals

Information card

For each roofing installation, submit a typewritten card or photoengraved aluminum card containing the information listed on Form 1 located at the end of this section.

1.5 DESIGN CALCULATIONS

Provide design calculations prepared by a professional engineer specializing in structural engineering verifying that system supplied and any additional framing meets design load criteria indicated. Coordinate calculations with manufacturer's test results. Include calculations for:

Wind load uplift design pressure at roof locations specified in paragraph entitled "Wind Uplift."

Clip spacing and allowable load per clip.

Fastening of clips to structure or intermediate supports.

Intermediate support spacing and framing and fastening to structure when required.

Allowable panel span at anchorage spacing indicated.

Safety factor used in design loading.

Governing code requirements or criteria.

Edge and termination details.

1.6 QUALITY ASSURANCE

1.6.1 Preroofing Conference

After submittals are received and approved but before roofing work, including associated work, is preformed, the Contracting Officer will hold a preroofing conference to review the following:

a. The drawings and specifications

b. Procedure for on site inspection and acceptance of the roofing substrate and pertinent structural details relating to the roofing system

c. Contractor's plan for coordination of the work of the various trades involved in providing the roofing system and other components secured to the roofing

d. Safety requirements

The preroofing conference shall be attended by the Contractor and personnel directly responsible for the roofing installation, and the roofing manufacturer's technical representative. Conflicts among those attending the preroofing conference shall be resolved and confirmed in writing before roofing work, including associated work, is begun.

1.6.2 Manufacturer

The SSMRS shall be the product of a metal roofing industry - recognized manufacturer who has been in the practice of manufacturing SSMRS for a period of not less than 5 years and who has been involved in at least 5 projects similar in size and complexity to this project.

1.6.3 Manufacturer's Technical Representative

The representative shall have authorization from manufacturer to approve field changes and be thoroughly familiar with the products and with installations in the geographical area where construction will take place. The manufacturer's representative shall be an employee of the manufacturer with at least 5 years experience in installing the roof system. The representative shall be available to perform field inspections and attend meetings as required herein, and as requested by the Contracting Officer.

1.6.4 Installer's Qualifications

The roofing system installer shall be factory-trained, approved by the metal roofing system manufacturer to install the system, and shall have a minimum of three years experience as an approved applicator with that manufacturer. The applicator shall have applied five installations of similar size and scope as this project within the previous 3 years.

1.6.5 Single Source

Roofing panels, clips, closures, and other accessories shall be standard products of the same manufacturer; shall be the latest design by the manufacturer; and shall have been designed by the manufacturer to operate as a complete system for the intended use.

1.6.6 Laboratory Tests For Panel Finish

The term "appearance of base metal" refers to the metal coating on steel. Panels shall meet the following test requirements:

a. Formability Test: When subjected to a 180 degree bend over a 3 mm diameter mandrel in accordance with ASTM D522/D522M, exterior coating film shall show only slight microchecking and no loss of adhesion.

b. Accelerated Weathering Test: Withstand a weathering test for a minimum of 2000 hours in accordance with ASTM G152 and ASTM G153, Method 1 without cracking, peeling, blistering, loss of adhesion of the protective coating, or corrosion of the base metal. Protective coating that can be readily removed from the base metal with a penknife blade or similar instrument shall be considered to indicate loss of adhesion.

c. Chalking Resistance: After the 2000-hour weatherometer test, exterior coating shall not chalk greater than No. 8 rating when measured in accordance with ASTM D4214 test procedures.

d. Color Change Test:

After the 2000-hour weatherometer test, exterior coating color change shall not exceed 5 NBS units when measured in accordance with ASTM D2244 test procedure.

e. Salt Spray Test: Withstand a salt spray test for a minimum of 1000 hours in accordance with ASTM B117, including the scribe requirement in the test. Immediately upon removal of the panel from the test, the coating shall receive a rating of 10, no blisters in field as determined by ASTM D714; and an average rating of 7, 2 mm failure at scribe, as determined by ASTM D1654. Rating Schedule No. 1.f. Abrasion Resistance Test for Color Coating: When subjected to the falling sand test in accordance with ASTM D968, coating system shall withstand a minimum of 50 liters of sand per mil thickness before appearance of base metal.

g. Humidity Test: When subjected to a humidity cabinet test in accordance with ASTM D2247 for 1000 hours, a scored panel shall show no signs of blistering, cracking, creepage, or corrosion.

1.7 WARRANTY

Furnish manufacturer's no-dollar-limit materials and workmanship warranty for the roofing system. The warranty period shall be not less than 20 years from the date of Government acceptance of the work. The warranty shall be issued directly to the Government. The warranty shall provide that if within the warranty period the metal roofing system becomes non-watertight or shows evidence of corrosion, perforation, rupture or excess weathering due to deterioration of the roofing system resulting from defective materials or installed workmanship the repair or replacement of the defective materials and correction of the defective workmanship shall be the responsibility of the roofing system manufacturer. Repairs that become necessary because of defective materials and workmanship while roofing is under warranty shall be performed within 7 days after notification, unless additional time is approved by the Contracting Officer. Failure to perform repairs within the specified period of time will constitute grounds for having the repairs performed by others and the cost billed to the manufacturer. The Contractor shall also provide a 2 year contractor installation warranty.

1.8 DELIVERY, STORAGE AND HANDLING

Deliver, store, and handle preformed panels, bulk roofing products and other manufactured items in a manner to prevent damage or deformation.

1.8.1 Delivery

Provide adequate packaging to protect materials during shipment. Crated materials shall not be uncrated until ready for use, except for inspection. Immediately upon arrival of materials at the jobsite, inspect materials for damage, dampness, and staining. Damaged or permanently stained materials that cannot be restored to like-new condition shall be replaced with satisfactory material. If materials are wet, remove the moisture and re-stack and protect the panels until used.

1.8.2 Storage

Stack materials on platforms or pallets and cover with tarpaulins or other suitable weathertight covering which prevents water trapping or condensation. Store materials so that water which might have accumulated during transit or storage will drain off. Do not store the panels in contact with materials that might cause staining, such as mud, lime, cement, fresh concrete or chemicals. Protect stored panels from wind damage.

1.8.3 Handling

Handle material carefully to avoid damage to surfaces, edges and ends.

PART 2 PRODUCTS

2.1 ROOFING PANELS

Panels shall have interlocking ribs for securing adjacent sheets. System for securing the roof covering to structural framing members shall be concealed clip fastening system with no fasteners penetrating the panels except at the ridge or eave, rakes, penetrations, and end laps. Backing plates and ends of panels at end laps shall be predrilled or prepunched; factory prepare ends of panels to be lapped by trimming part of seam, die-setting or swaging ends of panels. Length of sheets shall be sufficient to cover the entire length of any unbroken roof slope when such slope is 9 meters or less. When length of run exceeds 9 meters, each sheet in the run shall extend over two or more spans. Sheets longer than 9 meters may be furnished if approved by the Contracting Officer. Width of sheets shall provide not less than 300 mm of coverage in place. Height of corrugations of adjacent roof sheets shall be not less than 45 mm (nominal). Make provisions for expansion and contraction at either ridge or eave, consistent with the type of system to be used. Panels from coil stock shall be formed without warping, waviness or ripples not part of the panel profile and shall be free of damage to the finish coating system.

2.1.1 Material

Zinc-coated steel conforming to ASTM A653/A653M, Z275coating designation.. Minimum thickness to be 0.6 mm minimum except when mid field of roof is subject to design wind uplift pressures of 3 kPa or greater, entire roof system shall have a minimum thickness of 0.8 mm.

2.1.2 Texture

Smooth with raised intermediate ribs for added stiffness.

2.1.3 Finish

Factory color finish.

2.1.3.1 Factory Color Finish

Provide factory applied, thermally cured coating to exterior and interior of metal roof and wall panels and metal accessories. Provide exterior finish top coat of 70 percent resin polyvinylidene fluoride with not less than 0.005 mm dry film thickness. Provide exterior primer standard with panel manufacturer with not less than 0.005 mm dry film thickness. Interior finish shall consist of 0.005 mm dry film thickness backer coat. Provide exterior coating meeting test requirements specified below. Tests shall have been performed on the same factory finish and thickness provided. Provide clear factory edge coating on all factory cut or unfinished edges. SRI to be 29 or greater.

2.2 ATTACHMENT CLIPS

Fabricate clips from ASTM A1011/A1011M, or ASTM A1008/A1008M steel hot-dip galvanized in accordance with ASTM A653/A653M, Z275, or Series 300

stainless steel. Size, shape, thickness and capacity as required to meet the load, insulation thickness and deflection criteria specified.

2.3 ACCESSORIES

Sheet metal flashings, gutters, downspouts, trim, moldings, closure strips, pre-formed crickets, caps, equipment curbs, and other similar sheet metal accessories used in conjunction with preformed metal panels shall be of the same material as used for the panels. Provide metal accessories with a factory color finish to match the roofing panels, except that such items which will be concealed after installation may be provided without the finish if they are stainless steel. Metal shall be of a thickness not less than that used for the panels. Thermal spacer blocks and other thermal barriers at concealed clip fasteners shall be as recommended by the manufacturer except that wood spacer blocks are not allowed.

2.3.1 Closures

2.3.1.1 Rib Closures

Corrosion resisting steel, closed-cell or solid-cell synthetic rubber, neoprene or polyvinyl chloride pre-molded to match configuration of rib opening. Material for closures shall not absorb water.

2.3.1.2 Ridge Closures

Metal-clad foam or metal closure with foam secondary closure matching panel configuration for installation on surface of roof panel between panel ribs at ridge and headwall roof panel flashing conditions and terminations. Foam material shall not absorb water.

2.3.2 Fasteners

Zinc-coated steel, corrosion resisting steel, zinc cast head, or nylon capped steel, type and size specified below or as otherwise approved for the applicable requirements. Design the fastening system to withstand the design loads specified. Exposed fasteners shall be gasketed or have gasketed washers on the exterior side of the covering to waterproof the penetration. Washer material shall be compatible with the covering; have a minimum diameter of 10 mm for structural connections; and gasketed portion of fasteners or washers shall be neoprene or other equally durable elastomeric material approximately 3 mm thick.

2.3.2.1 Screws

Not smaller than 4.75 mm diameter if self-tapping type and not smaller than 4 mm diameter if self-drilling and self-tapping.

2.3.2.2 Bolts

Not smaller than 6 mm diameter, shouldered or plain shank as required, with proper nuts.

2.3.2.3 Automatic End-Welded Studs

Automatic end-welded studs shall be shouldered type with a shank diameter of not smaller than 5 mm and cap or nut for holding covering against the shoulder.

2.3.2.4 Explosive Driven Fasteners

Fasteners for use with explosive actuated tools shall have a shank diameter of not smaller than 4 mm with a shank length of not smaller than 13 mm for fastening to steel and not smaller than 25 mm for fastening to concrete.

2.3.2.5 Rivets

Blind rivets shall be stainless steel with 3 mm nominal diameter shank. Rivets shall be threaded stem type if used for other than the fastening of trim. Rivets with hollow stems shall have closed ends.

2.3.3 Sealants

Elastomeric type containing no oil or asphalt. Exposed sealant shall cure to a rubberlike consistency. Concealed sealant shall be the non-hardening type. Seam sealant shall be factory-applied, non-skinning, non-drying, and shall conform to the roofing manufacturer's recommendations. Silicone-based sealants shall not be used in contact with finished metal panels and components unless approved otherwise by the Contracting Officer.

2.3.4 GASKETS AND INSULATING COMPOUNDS

Nonabsorptive and suitable for insulating contact points of incompatible materials. Insulating compounds shall be nonrunning after drying.

PART 3 EXECUTION

3.1 EXAMINATION

Examine surfaces to receive standing seam metal roofing and flashing. Ensure that surfaces are plumb and true, clean, even, smooth, as dry and free from defects and projections which might affect the installation.

3.2 PROTECTION FROM CONTACT WITH DISSIMILAR MATERIALS

3.2.1 Cementitious Materials

Paint metal surfaces which will be in contact with mortar, concrete, or other masonry materials with one coat of alkali-resistant coating such as heavy-bodied bituminous paint.

3.2.2 Contact with Wood

Where metal will be in contact with wood or other absorbent material subject to wetting, seal joints with sealing compound and apply one coat of heavy-bodied bituminous paint.

3.3 INSTALLATION

Install in accordance with the approved manufacturer's erection instructions, shop drawings, and diagrams. Panels shall be in full and firm contact with attachment clips. Where prefinished panels are cut in the field, or where any of the factory applied coverings or coatings are abraded or damaged in handling or installation, they shall, after necessary repairs have been made with material of the same color as the weather coating, be approved before being installed. Seal completely

openings through panels. Correct defects or errors in the materials. Replace materials which cannot be corrected in an approved manner with nondefective materials. Provide molded closure strips where indicated and where necessary to provide weathertight construction. Use shims as required to ensure attachment clip line is true. Use a spacing gage at each row of panels to ensure that panel width is not stretched or shortened.

3.3.1 Roof Panels

Apply roofing panels with the standing seams parallel to the slope of the roof. Provide roofing panels in longest practical lengths from ridge to eaves (top to eaves on shed roofs), with no transverse joints except at the junction of ventilators, curbs, skylights, chimneys, and similar openings. Install flashing to assure positive water drainage away from roof penetrations. Locate panel end laps such that fasteners do not engage supports or otherwise restrain the longitudinal thermal movement of panels. Form field-formed seam type system seams in the field with an automatic mechanical seamer approved by the manufacturer. Attach panels to the structure with concealed clips incorporated into panel seams. Clip attachment shall allow roof to move independently of the structure, except at fixed points as indicated.

3.3.2 Flashings

Provide flashing, related closures and accessories as indicated and as necessary to provide a weathertight installation. Install flashing to ensure positive water drainage away from roof penetrations. Flash and seal the roof at the ridge, eaves and rakes, and projections through the roof. Place closure strips, flashing, and sealing material in an approved manner that will assure complete weathertightness. Details of installation which are not indicated shall be in accordance with the SMACNA 1793, panel manufacturer's approved printed instructions and details, or the approved shop drawings. Allow for expansion and contraction of flashing.

3.3.3 Flashing Fasteners

Fastener spacings shall be in accordance with the panel manufacturer's recommendations and as necessary to withstand the design loads indicated. Install fasteners in roof valleys as recommended by the manufacturer of the panels. Install fasteners in straight lines within a tolerance of 13 mm in the length of a bay. Drive exposed penetrating type fasteners normal to the surface and to a uniform depth to seat gasketed washers properly and drive so as not to damage factory applied coating. Exercise extreme care in drilling pilot holes for fastenings to keep drills perpendicular and centered. Do not drill through sealant tape. After drilling, remove metal filings and burrs from holes prior to installing fasteners and washers. Torque used in applying fasteners shall not exceed that recommended by the manufacturer. Remove panels deformed or otherwise damaged by over-torqued fastenings, and provide new panels.

3.3.4 Rib and Ridge Closure/Closure Strips

Set closure/closure strips in joint sealant material and apply sealant to mating surfaces prior to adding panel.

3.4 PROTECTION OF APPLIED ROOFING

Do not permit storing, walking, wheeling, and trucking directly on applied roofing materials. Provide temporary walkways, runways, and platforms of smooth clean boards or planks as necessary to avoid damage to applied roofing materials, and to distribute weight to conform to indicated live load limits of roof construction.

3.5 CLEANING

Clean exposed sheet metal work at completion of installation. Remove metal shavings, filings, nails, bolts, and wires from roofs. Remove grease and oil films, excess sealants, handling marks, contamination from steel wool, fittings and drilling debris and scrub the work clean. Exposed metal surfaces shall be free of dents, creases, waves, scratch marks, solder or weld marks and damage to the finish coating.

3.6 COMPLETED WORK

Completed work shall be plumb and true without oil canning, dents, ripples, abrasion, rust, staining, or other damage detrimental to the performance or aesthetics of the completed roof assembly.

3.7 INFORMATION CARD

For each roof, provide a typewritten card, laminated in plastic and framed for interior display or a photoengraved 0.8 mm thick thick aluminum card for exterior display. Card to be 220 by 280 mm minimum and contain the information listed on Form 1 at end of this section. Install card near point of access to roof, or where indicated. Send a photostatic paper copy to LANTNAVFACENGCOM, Code 1613, 1510 Gilbert Street, Norfolk, VA 23511-2699.

3.8 SCHEDULE

Some metric measurements in this section are based on mathematical conversion of English unit measurements, and not on metric measurement commonly agreed to by the manufacturers or other parties. The English and metric units for the measurements shown are as follows:

PRODUCTS	ENGLISH UNITS	METRIC UNITS
a. Steel sheets	0.023 inch	0.6 mm
	0.030 inch	0.8 mm
b. Gasket washers	3/8 inch	10 mm
	1/8 inch	3 mm
c. Screws	No. 14	4.75 mm
	No. 12	4 mm
d. Bolts	1/4 inch	6 mm

e. Studs	3/16 inch	5 mm
f. Fasteners	0.145 inch by 1/2 inch	4 mm by 13 mm
	One inch	25 mm
g. Rivets	1/8 inch	3 mm

3.9 FORM ONE

FORM 1 - PREFORMED STEEL STANDING SEAM ROOFING SYSTEM COMPONENTS

1. Contract Number:

2. Building Number & Location:

3. NAVFAC Specification Number:

4. Deck/Substrate Type:

5. Slopes of Deck/Roof Structure:

6. Insulation Type & Thickness:

7. Insulation Manufacturer:

8. Vapor Retarder: ( )Yes ( )No

9. Vapor Retarder Type:

10. Preformed Steel Standing Seam Roofing Description:

a. Manufacturer (Name, Address, & Phone No.):
b. Product Name: c. Width: d. Gage:
e. Base Metal: f. Method of Attachment:

11. Repair of Color Coating:

a. Coating Manufacturer (Name, Address & Phone No.):
b. Product Name:
c. Surface Preparation:
d. Recoating Formula:
e. Application Method:

12. Statement of Compliance or Exception:_____
_____
_____

13. Date Roof Completed:

14. Warranty Period: From_____ To_____

15. Roofing Contractor (Name & Address):

16. Prime Contractor (Name & Address):

Contractor's Signature _____ Date:

Inspector's Signature _____ Date:

-- End of Section --

THIS PAGE HAS BEEN INTENTIONALLY LEFT BLANK

SECTION 07 84 00

FIRESTOPPING
05/10

PART 1 GENERAL

1.1 REFERENCES

The publications listed below form a part of this specification to the extent referenced. The publications are referred to within the text by the basic designation only.

ASTM INTERNATIONAL (ASTM)

ASTM E119	(2012a) Standard Test Methods for Fire Tests of Building Construction and Materials
ASTM E1399/E1399M	(1997; E 2013;R 2013) Cyclic Movement and Measuring the Minimum and Maximum Joint Widths of Architectural Joint Systems
ASTM E1966	(2007; R 2011) Fire-Resistive Joint Systems
ASTM E2174	(2014) Standard Practice for On-Site Inspection of Installed Fire Stops
ASTM E2307	(2010) Standard Test Method for Determining Fire Resistance of Perimeter Fire Barrier Systems Using Intermediate-Scale, Multi-story Test Apparatus
ASTM E2393	(2010a) Standard Practice for On-Site Inspection of Installed Fire Resistive Joint Systems and Perimeter Fire Barriers
ASTM E814	(2013a) Standard Test Method for Fire Tests of Through-Penetration Fire Stops
ASTM E84	(2014) Standard Test Method for Surface Burning Characteristics of Building Materials

FM GLOBAL (FM)

FM 4991	(2013) Approval of Firestop Contractors
FM APP GUIDE	(updated on-line) Approval Guide http://www.approvalguide.com/

INTERNATIONAL CODE COUNCIL (ICC)

ICC IBC	(2012) International Building Code

UNDERWRITERS LABORATORIES (UL)

UL 1479	(2003; Reprint Oct 2012) Fire Tests of Through-Penetration Firestops
UL 2079	(2004; Reprint Dec 2012) Tests for Fire Resistance of Building Joint Systems
UL 723	(2008; Reprint Aug 2013) Test for Surface Burning Characteristics of Building Materials
UL Fire Resistance	(2012) Fire Resistance Directory

1.2 SYSTEM DESCRIPTION

1.2.1 General

Furnish and install tested and listed firestopping systems, combination of materials, or devices to form an effective barrier against the spread of flame, smoke and gases, and maintain the integrity of fire resistance rated walls, partitions, floors, and ceiling-floor assemblies, including through-penetrations and construction joints and gaps.

a. Through-penetrations include the annular space around pipes, tubes, conduit, wires, cables and vents.

b. Construction joints include those used to accommodate expansion, contraction, wind, or seismic movement; firestopping material shall not interfere with the required movement of the joint.

Gaps requiring firestopping include gaps between the curtain wall and the floor slab and between the top of the fire-rated walls and the roof or floor deck above and at the intersection of shaft assemblies and adjoining fire resistance rated assemblies.

1.2.2 Sequencing

Coordinate the specified work with other trades. Apply firestopping materials, at penetrations of pipes and ducts, prior to insulating, unless insulation meets requirements specified for firestopping. Apply firestopping materials. at building joints and construction gaps, prior to completion of enclosing walls or assemblies. Cast-in-place firestop devices shall be located and installed in place before concrete placement. Pipe, conduit or cable bundles shall be installed through cast-in-place device after concrete placement but before area is concealed or made inaccessible. Firestop material shall be inspected and approved prior to final completion and enclosing of any assemblies that may conceal installed firestop.

1.2.3 Submittals Requirements

a. Submit detail drawings including manufacturer's descriptive data, typical details conforming to UL Fire Resistance or other details certified by another nationally recognized testing laboratory, installation instructions or UL listing details for a firestopping assembly in lieu of fire-test data or report. For those firestop applications for which no UL tested system is available through a manufacturer, a manufacturer's engineering judgment, derived from

similar UL system designs or other tests, shall be submitted for review and approval prior to installation. Submittal shall indicate the firestopping material to be provided for each type of application. When more than a total of 5 penetrations and/or construction joints are to receive firestopping, provide drawings that indicate location, "F" "T" and "L" ratings, and type of application.

b. Submit certificates attesting that firestopping material complies with the specified requirements. For all intumescent firestop materials used in through penetration systems, manufacturer shall provide certification of compliance with UL 1479.

c. Submit documentation of training and experience for Installer.

d. Submit inspection report stating that firestopping work has been inspected and found to be applied according to the manufacturer's recommendations and the specified requirements.

e. VOC Content.

1.3 SUBMITTALS

Government approval is required for submittals with a "G" designation; submittals not having a "G" designation are for Contractor Quality Control approval. Submittals with an "S" are for inclusion in the Sustainability Notebook, in conformance to Section 01 33 29SUSTAINABILITY REQUIREMENTS. Submit the following in accordance with Section 01 33 00 SUBMITTAL PROCEDURES:

SD-02 Shop Drawings

Firestopping Materials; G

SD-06 Test Reports

Inspection; G

1.4 QUALITY ASSURANCE

1.4.1 Installer

Engage an experienced Installer who is:

a. FM Research approved in accordance with FM 4991, operating as a UL Certified Firestop Contractor, or

b. Certified, licensed, or otherwise qualified by the firestopping manufacturer as having the necessary staff, training, and a minimum of 3 years experience in the installation of manufacturer's products in accordance with specified requirements. A manufacturer's willingness to sell its firestopping products to the Contractor or to an installer engaged by the Contractor does not in itself confer installer qualifications on the buyer. The Installer shall have been trained by a direct representative of the manufacturer (not distributor or agent) in the proper selection and installation procedures. The installer shall obtain from the manufacturer written certification of training, and retain proof of certification for duration of firestop installation.

1.4.2 Inspector Qualifications

The inspector shall have a minimum of two years experience in construction field inspections of firestopping systems, products, and assemblies. The inspector shall be completely independent of, and divested from, the installer, the manufacturer, and the supplier of any material or item being inspected. The inspector shall not be a competitor of the installer, the contractor, the manufacturer, or supplier of any material or item being inspected. Include in the qualifications submittal a notarized statement assuring compliance with the requirements stated herein.

1.5 DELIVERY, STORAGE, AND HANDLING

Deliver materials in the original unopened packages or containers showing name of the manufacturer and the brand name. Store materials off the ground, protected from damage and exposure to elements and temperatures in accordance with manufacturer requirements. Remove damaged or deteriorated materials from the site. Use materials within their indicated shelf life.

PART 2 PRODUCTS

2.1 FIRESTOPPING MATERIALS

Provide firestopping materials, supplied from a single domestic manufacturer, consisting of commercially manufactured, asbestos-free, nontoxic products FM APP GUIDE approved, or UL listed, for use with applicable construction and penetrating items, complying with the following minimum requirements: VOC content of firestop materials installed on project is limited to < 250 g/l as calculated by EPA method 24.

2.1.1 Fire Hazard Classification

Material shall have a flame spread of 25 or less, and a smoke developed rating of 50 or less, when tested in accordance with ASTM E84 or UL 723. Material shall be an approved firestopping material as listed in UL Fire Resistance or by a nationally recognized testing laboratory.

2.1.2 Toxicity

Material shall be nontoxic and carcinogen free to humans at all stages of application or during fire conditions and shall not contain hazardous chemicals or require harmful chemicals to clean material or equipment. Firestop material must be free from Ethylene Glycol, PCB, MEK, or other types of hazardous chemicals.

2.1.3 Fire Resistance Rating

Firestop systems shall be UL Fire Resistance listed or FM APP GUIDE approved with "F" rating at least equal to fire-rating of fire wall or floor in which penetrated openings are to be protected. Where required, firestop systems shall also have "T" rating at least equal to the fire-rated floor in which the openings are to be protected.

2.1.3.1 Through-Penetrations

Firestopping materials for through-penetrations, as described in paragraph

SYSTEM DESCRIPTION, shall provide "F", "T" and "L" fire resistance ratings in accordance with ASTM E814 or UL 1479. Fire resistance ratings shall be as follows:

2.1.3.1.1 Penetrations of Fire Resistance Rated Walls and Partitions

F Rating = Rating of wall or partition being penetrated.

2.1.3.1.2 Penetrations of Fire Resistance Rated Floors, Floor-Ceiling Assemblies and the Ceiling Membrane of Roof-Ceiling Assemblies

F Rating = 2 hour, T Rating = 2 hour. Where the penetrating item is outside of a wall cavity the F rating must be equal to the fire resistance rating of the floor penetrated, and the T rating shall be in accordance with the requirements of ICC IBC.

2.1.3.1.3 Penetrations of Fire and Smoke Resistance Rated Walls, Floors, Floor-Ceiling Assemblies, and the ceiling membrane of Roof-Ceiling Assemblies

F Rating = 2 hour, T Rating = 2 hour and L Rating = 2<102 cfm/sf Where L rating is required.

2.1.3.2 Construction Joints and Gaps

Fire resistance ratings of construction joints, as described in paragraph SYSTEM DESCRIPTION, and gaps such as those between floor slabs and curtain walls shall be the same as the construction in which they occur. Construction joints and gaps shall be provided with firestopping materials and systems that have been tested in accordance with ASTM E119, ASTM E1966 or UL 2079 to meet the required fire resistance rating. Curtain wall joints shall be provided with firestopping materials and systems that have been tested in accordance with ASTM E2307 to meet the required fire resistance rating. Systems installed at construction joints shall meet the cycling requirements of ASTM E1399/E1399M or UL 2079. All joints at the intersection of the top of a fire resistance rated wall and the underside of a fire-rated floor, floor ceiling, or roof ceiling assembly shall provide a minimum class II movement capability.

PART 3 EXECUTION

3.1 PREPARATION

Areas to receive firestopping shall be free of dirt, grease, oil, or loose materials which may affect the fitting or fire resistance of the firestopping system. For cast-in-place firestop devices, formwork or metal deck to receive device prior to concrete placement shall be sound and capable of supporting device. Prepare surfaces as recommended by the manufacturer.

3.2 INSTALLATION

Completely fill void spaces with firestopping material regardless of geometric configuration, subject to tolerance established by the manufacturer. Firestopping systems for filling floor voids 100 mm or more in any direction shall be capable of supporting the same load as the floor is designed to support or shall be protected by a permanent barrier to prevent loading or traffic in the firestopped area. Install firestopping in accordance with manufacturer's written instructions. Provide tested and listed firestop systems in the following locations, except in floor

slabs on grade:

a. Penetrations of duct, conduit, tubing, cable and pipe through floors and through fire-resistance rated walls, partitions, and ceiling-floor assemblies.

b. Gaps at perimeter of fire-resistance rated walls and partitions, such as between the top of the walls and the bottom of roof decks.

c. Construction joints in floors and fire rated walls and partitions.

d. Other locations where required to maintain fire resistance rating of the construction.

3.2.1 Insulated Pipes and Ducts

Thermal insulation shall be cut and removed where pipes or ducts pass through firestopping, unless insulation meets requirements specified for firestopping. Replace thermal insulation with a material having equal thermal insulating and firestopping characteristics.

3.2.2 Fire Dampers

Install and firestop fire dampers in accordance with Section 23 00 00 AIR SUPPLY, DISTRIBUTION, VENTILATION, AND EXHAUST SYSTEM. Firestop installed with fire damper must be tested and approved for use in fire damper system. Firestop installed with fire damper must be tested and approved for use in fire damper system.

3.2.3 Data and Communication Cabling

Cabling for data and communication applications shall be sealed with re-enterable firestopping products and devices as indicated.

3.2.3.1 Re-Enterable Devices

Firestopping devices shall be pre-manufactured modular devices, containing built-in self-sealing intumescent inserts. Firestopping devices shall allow for cable moves, additions or changes without the need to remove or replace any firestop materials. Devices must be capable of maintaining the fire resistance rating of the penetrated membrane at 0 percent to 100 percent visual fill of penetrants; while maintaining "L" rating of <10 cfm/sf measured at ambient temperature and 205 degrees C at 0 percent to 100 percent visual fill.

3.2.3.2 Re-Sealable Products

Provide firestopping pre-manufactured modular products, containing self-sealing intumescent inserts. Firestopping products shall allow for cable moves, additions or changes. Devices shall be capable of maintaining the fire resistance rating of the penetrated membrane at 0 percent to 100 percent visual fill of penetrants.

3.3 INSPECTION

3.3.1 General Requirements

For Navy projects, install one of each type of penetration and have it

inspected and accepted by the Contractor's Fire Protection Engineer prior to the installation of the remainder of the penetrations. At this inspection, the manufacturer's technical representative of the firestopping material shall be present. For all projects, the remainder of the firestopped areas shall not be covered or enclosed until inspection is complete and approved by the Contractor's Fire Protection Engineer and the Contracting Officer. The inspector shall inspect the applications initially to ensure adequate preparations (clean surfaces suitable for application, etc.) and periodically during the work to assure that the completed work has been accomplished according to the manufacturer's written instructions and the specified requirements. Submit written reports indicating locations of and types of penetrations and types of firestopping used at each location; type shall be recorded by UL listed printed numbers.

3.3.2 Inspection Standards

Inspect all firestopping in accordance to ASTM E2393 and ASTM E2174 for firestop inspection, and document inspection results to be submitted.

-- End of Section --

THIS PAGE HAS BEEN INTENTIONALLY LEFT BLANK

SECTION 07 92 00

JOINT SEALANTS
01/07

PART 1 GENERAL

1.1 REFERENCES

The publications listed below form a part of this specification to the extent referenced. The publications are referred to within the text by the basic designation only.

ASTM INTERNATIONAL (ASTM)

ASTM C1311	(2014) Standard Specification for Solvent Release Agents
ASTM C509	(2006; R 2011) Elastomeric Cellular Preformed Gasket and Sealing Material
ASTM C834	(2014) Latex Sealants
ASTM C920	(2014a) Standard Specification for Elastomeric Joint Sealants
ASTM D1056	(2014) Standard Specification for Flexible Cellular Materials - Sponge or Expanded Rubber
ASTM D2452	(2003; R 2009) Standard Test Method for Extrudability of Oil- and Resin-Base Caulking Compounds
ASTM D2453	(2003; R 2009) Standard Test Method for Shrinkage and Tenacity of Oil- and Resin-Base Caulking Compounds

1.2 SUBMITTALS

Government approval is required for submittals with a "G" designation; submittals not having a "G" designation are for Contractor Quality Control approval. Submittals with an "S" are for inclusion in the Sustainability Notebook, in conformance to Section 01 33 29SUSTAINABILITY REQUIREMENTS. Submit the following in accordance with Section 01 33 00 SUBMITTAL PROCEDURES:

SD-03 Product Data

Sealants; G

Primers; G

Bond breakers

Backstops

Manufacturer's descriptive data including storage requirements,

shelf life, curing time, instructions for mixing and application, V.O.C. content and primer data (if required). Provide a copy of the Material Safety Data Sheet for each solvent, primer or sealant material.

SD-07 Certificates

Sealant; G

Certificates of compliance stating that the materials conform to the specified requirements.

1.3 ENVIRONMENTAL CONDITIONS

Apply sealant when the ambient temperature is between 4 and 32 degrees C.

1.4 DELIVERY AND STORAGE

Deliver materials to the job site in unopened manufacturers' external shipping containers, with brand names, date of manufacture, color, and material designation clearly marked thereon. Label elastomeric sealant containers to identify type, class, grade, and use. Carefully handle and store materials to prevent inclusion of foreign materials or subjection to sustained temperatures exceeding 32 degrees C or less than 4 degrees C.

1.5 QUALITY ASSURANCE

1.5.1 Compatibility with Substrate

Verify that each of the sealants are compatible for use with joint substrates.

1.5.2 Joint Tolerance

Provide joint tolerances in accordance with manufacturer's printed instructions.

1.5.3 Mock-Up

Project personnel is responsible for installing sealants in mock-up prepared by other trades, using materials and techniques approved for use on the project.

1.6 SPECIAL WARRANTY

Guarantee sealant joint against failure of sealant and against water penetration through each sealed joint for five years.

PART 2 PRODUCTS

2.1 SEALANTS

Provide sealant that has been tested and found suitable for the substrates to which it will be applied.

2.1.1 Interior Sealant

Interior sealants shall have a V.O.C. content of 250 g/L or less and comply with SCAQMD Rule No. 1168. Provide ASTM C834. Location(s) and

color(s) of sealant for the following:

LOCATION	COLOR
a. Small voids between walls or partitions and adjacent lockers, casework, shelving, door frames, built-in or surface-mounted equipment and fixtures, and similar items.	White
b. Perimeter of frames at doors, windows, and access panels which adjoin exposed interior concrete and masonry surfaces.	White
c. Joints of interior masonry walls and partitions which adjoin columns, pilasters, concrete walls, and exterior walls unless otherwise detailed.	White
d. Joints between edge members for acoustical tile and adjoining vertical surfaces.	White
e. Interior locations, not otherwise indicated or specified, where small voids exist between materials specified to be painted.	White
f. Joints between bathtubs and ceramic tile; joints between shower receptors and ceramic tile; joints formed where nonplaner tile surfaces meet.	White
g. Joints formed between tile floors and tile base cove; joints between tile and dissimilar materials; joints occurring where substrates change.	White
h. Behind escutcheon plates at valve pipe penetrations and showerheads in showers.	White

2.1.2 Exterior Sealant

For joints in vertical surfaces, provide ASTM C920, Type S or M, Grade NS, Class 25, Use NT. For joints in horizontal surfaces, provide ASTM C920, Type S or M, Grade P, Class 25, Use T. If used inside of the Operations Building weatherproofing barrier, VOC content shall be less than 250 g/L. Provide location(s) and color(s) of sealant as follows:

LOCATION	COLOR
a. Joints and recesses formed where frames and subsills of windows, doors, louvers, and vents adjoin masonry, concrete, or metal frames. Use sealant at both exterior and interior surfaces of exterior wall penetrations.	Match adjacent wall color
c. Expansion and control joints.	Match stucco

LOCATION	COLOR
d. Interior face of expansion joints in exterior concrete or masonry walls where metal expansion joint covers are not required.	Match concrete
e. Voids where items pass through exterior walls.	Match wall
f. Metal reglets, where flashing is inserted into joints, and where flashing is penetrated by coping dowels.	Match adjacent surface color
g. Metal-to-metal joints where sealant is indicated or specified.	Match adjacent surface color
h. Joints between ends of gravel stops, fascias, copings, and adjacent walls.	Match adjacent surface color

2.1.3 Floor Joint Sealant

ASTM C920, Type S or M, Grade P, Class 25, Use T. If used inside of the Operations Building weather barrier, VOC content to be less than 250 g/L. Provide location(s) and color(s) of sealant as follows:

LOCATION	COLOR
a. Seats of metal thresholds for exterior doors.	Gray
b. Control and expansion joints in floors, slabs, ceramic tile, and walkways.	Match concrete floor finish where exposed or ceramic tile grout

2.2 PRIMERS

Provide a nonstaining, quick-drying type and consistency recommended by the sealant manufacturer for the particular application. VOC content shall be less than 250 if used inside the Operations Building.

2.3 BOND BREAKERS

Provide the type and consistency recommended by the sealant manufacturer to prevent adhesion of the sealant to backing or to bottom of the joint.

2.4 BACKSTOPS

Provide glass fiber roving or neoprene, butyl, polyurethane, or polyethylene foams free from oil or other staining elements as recommended by sealant manufacturer. Provide 25 to 33 percent oversized backing for closed cell and 40 to 50 percent oversized backing for open cell material,

unless otherwise indicated. Make backstop material compatible with sealant. Do not use oakum and other types of absorptive materials as backstops.

2.4.1 Rubber

Conform to ASTM D1056, Type 2, closed cell, Class A in the Operations Building and Class B in the Pumphouses and Filter Building, round cross section for cellular rubber sponge backing.

2.4.2 Synthetic Rubber

Conform to ASTM C509, Option I, Type I preformed rods for Synthetic rubber backing.

2.4.3 Neoprene

Conform to ASTM D1056, closed cell expanded neoprene cord Type 2, Class C, Grade 2C2.

2.4.4 Butyl Rubber Based

Provide Butyl Rubber Based Sealants of single component, solvent release, color as selected, conforming to ASTM C1311.

2.4.5 Silicon Rubber Base

Provide Silicon Rubber Based Sealants of single component, solvent release, color as selected, conforming to ASTM C920, Non-sag, Type S, Grade as indicated, Class 25.

2.5 CAULKING

Conform to ASTM D2452 and ASTM D2453, Type S, for Oil- and resin-based caulking.

2.6 CLEANING SOLVENTS

Provide type(s) recommended by the sealant manufacturer.

PART 3 EXECUTION

3.1 SURFACE PREPARATION

Clean surfaces from dirt frost, moisture, grease, oil, wax, lacquer, paint, or other foreign matter that would tend to destroy or impair adhesion. Remove oil and grease with solvent. Surfaces must be wiped dry with clean cloths. When resealing an existing joint, remove existing caulk or sealant prior to applying new sealant. For surface types not listed below, contact sealant manufacturer for specific recommendations.

3.1.1 Steel Surfaces

Remove loose mill scale by sandblasting or, if sandblasting is impractical or would damage finish work, scraping and wire brushing. Remove protective coatings by sandblasting or using a residue-free solvent.

3.1.2 Aluminum or Bronze Surfaces

Remove temporary protective coatings from surfaces that will be in contact with sealant. When masking tape is used as a protective coating, remove tape and any residual adhesive just prior to sealant application. For removing protective coatings and final cleaning, use nonstaining solvents recommended by the manufacturer of the item(s) containing aluminum or bronze surfaces.

3.1.3 Concrete and Masonry Surfaces

Where surfaces have been treated with curing compounds, oil, or other such materials, remove materials by sandblasting or wire brushing. Remove laitance, efflorescence and loose mortar from the joint cavity.

3.1.4 Wood Surfaces

Keep wood surfaces to be in contact with sealants free of splinters and sawdust or other loose particles.

3.2 SEALANT PREPARATION

Do not add liquids, solvents, or powders to the sealant. Mix multicomponent elastomeric sealants in accordance with manufacturer's instructions.

3.3 APPLICATION

3.3.1 Joint Width-To-Depth Ratios

a. Acceptable Ratios:

JOINT WIDTH	JOINT DEPTH	
	Minimum	Maximum
For metal, glass, or other nonporous surfaces:		
6 mm (minimum)	6 mm	6 mm
over 6 mm	1/2 of width	Equal to width
For wood, concrete, masonry, stone, or stucco:		
6 mm (minimum)	6 mm	6 mm
over 6 mm to 13 mm	6 mm	Equal to width
over 13 mm to 50 mm	50 mm	16 mm
Over 50 mm	As recommended by sealant manufacturer	

b. Unacceptable Ratios: Where joints of acceptable width-to-depth ratios have not been provided, clean out joints to acceptable depths and grind or cut to acceptable widths without damage to the adjoining work. Grinding is not required on metal surfaces.

3.3.2 Masking Tape

Place masking tape on the finish surface on one or both sides of a joint cavity to protect adjacent finish surfaces from primer or sealant smears. Remove masking tape within 10 minutes after joint has been filled and tooled.

3.3.3 Backstops

Install backstops dry and free of tears or holes. Tightly pack the back or bottom of joint cavities with backstop material to provide a joint of the depth specified. Install backstops in the following locations:

a. Where indicated.

b. Where backstop is not indicated but joint cavities exceed the acceptable maximum depths specified in paragraph entitled, "Joint Width-to-Depth Ratios".

3.3.4 Primer

Immediately prior to application of the sealant, clean out loose particles from joints. Where recommended by sealant manufacturer, apply primer to joints in concrete masonry units, wood, and other porous surfaces in accordance with sealant manufacturer's instructions. Do not apply primer to exposed finish surfaces.

3.3.5 Bond Breaker

Provide bond breakers to the back or bottom of joint cavities, as recommended by the sealant manufacturer for each type of joint and sealant used, to prevent sealant from adhering to these surfaces. Carefully apply the bond breaker to avoid contamination of adjoining surfaces or breaking bond with surfaces other than those covered by the bond breaker.

3.3.6 Sealants

Provide a sealant compatible with the material(s) to which it is applied. Do not use a sealant that has exceeded shelf life or has jelled and can not be discharged in a continuous flow from the gun. Apply the sealant in accordance with the manufacturer's printed instructions with a gun having a nozzle that fits the joint width. Force sealant into joints to fill the joints solidly without air pockets. Tool sealant after application to ensure adhesion. Make sealant uniformly smooth and free of wrinkles. Upon completion of sealant application, roughen partially filled or unfilled joints, apply sealant, and tool smooth as specified. Apply sealer over the sealant when and as specified by the sealant manufacturer.

3.4 PROTECTION AND CLEANING

3.4.1 Protection

Protect areas adjacent to joints from sealant smears. Masking tape may be used for this purpose if removed 5 to 10 minutes after the joint is filled.

3.4.2 Final Cleaning

Upon completion of sealant application, remove remaining smears and stains

and leave the work in a clean and neat condition.

a. Masonry and Other Porous Surfaces: Immediately scrape off fresh sealant that has been smeared on masonry and rub clean with a solvent as recommended by the sealant manufacturer. Allow excess sealant to cure for 24 hour then remove by wire brushing or sanding.

b. Metal and Other Non-Porous Surfaces: Remove excess sealant with a solvent-moistened cloth.

-- End of Section --

SECTION 08 11 13

STEEL DOORS AND FRAMES
02/10

PART 1 GENERAL

1.1 REFERENCES

The publications listed below form a part of this specification to the extent referenced. The publications are referred to in the text by the basic designation only.

AMERICAN WELDING SOCIETY (AWS)

AWS D1.1/D1.1M	(2010; Errata 2011) Structural Welding Code - Steel

ASTM INTERNATIONAL (ASTM)

ASTM A653/A653M	(2013) Standard Specification for Steel Sheet, Zinc-Coated (Galvanized) or Zinc-Iron Alloy-Coated (Galvannealed) by the Hot-Dip Process
ASTM A879/A879M	(2012) Standard Specification for Steel Sheet, zinc Coated by the Electrolytic Process for Applications Requiring Designation of the Coating Mass on Each Surface
ASTM A924/A924M	(2013) Standard Specification for General Requirements for Steel Sheet, Metallic-Coated by the Hot-Dip Process

BUILDERS HARDWARE MANUFACTURERS ASSOCIATION (BHMA)

ANSI/BHMA A156.115	(2006) Hardware Preparation in Steel Doors and Steel Frames

STEEL DOOR INSTITUTE (SDI/DOOR)

SDI/DOOR 111	(2009) Recommended Selection and Usage Guide for Standard Steel Doors, Frames and Accessories
SDI/DOOR A250.11	(2001) Recommended Erection Instructions for Steel Frames
SDI/DOOR A250.6	(2003; R2009) Recommended Practice for Hardware Reinforcing on Standard Steel Doors and Frames
SDI/DOOR A250.8	(2003; R2008) Recommended Specifications for Standard Steel Doors and Frames

1.2 SUBMITTALS

Government approval is required for submittals with a "G" designation; submittals not having a "G" designation are for Contractor Quality Control approval. Submittals with an "S" are for inclusion in the Sustainability Notebook, in conformance to Section 01 33 29SUSTAINABILITY REQUIREMENTS. Submit the following in accordance with Section 01 33 00 SUBMITTAL PROCEDURES:

SD-02 Shop Drawings

Doors; G

Frames; G

Accessories

Show elevations, construction details, metal gages, hardware provisions, method of glazing, and installation details.

Schedule of doors; G

Schedule of frames; G

Submit door and frame locations.

SD-03 Product Data

Doors; G

Frames; G

Accessories

Submit manufacturer's descriptive literature for doors, frames, and accessories. Include data and details on door construction, panel (internal) reinforcement, insulation, and door edge construction. When "custom hollow metal doors" are provided in lieu of "standard steel doors," provide additional details and data sufficient for comparison to SDI/DOOR A250.8 requirements.

1.3 DELIVERY, STORAGE, AND HANDLING

Deliver doors, frames, and accessories undamaged and with protective wrappings or packaging. Strap knock-down frames in bundles. Provide temporary steel spreaders securely fastened to the bottom of each welded frame. Store doors and frames on platforms under cover in clean, dry, ventilated, and accessible locations, with 6 mm airspace between doors. Remove damp or wet packaging immediately and wipe affected surfaces dry. Replace damaged materials with new.

PART 2 PRODUCTS

2.1 STANDARD STEEL DOORS

SDI/DOOR A250.8, except as specified otherwise. Prepare doors to receive door hardware as specified in Section 08 71 00. Undercut where indicated. Exterior doors shall have top edge closed flush and sealed to prevent water intrusion. Doors shall be 44.5 mm thick, unless otherwise

indicated.

2.1.1 Classification - Level, Performance, Model

2.1.1.1 Maximum Duty Doors

SDI/DOOR A250.8, Level 4, physical performance Level A, Model 1 with core construction as required by the manufacturer for interior doors and mineral board insulation for exterior doors, of size(s) and design(s) indicated. Where vertical stiffener cores are required, the space between the stiffeners shall be filled with mineral board insulation.

2.2 ACCESSORIES

2.2.1 Moldings

Provide moldings around glass of interior and exterior doors and louvers of interior doors. Provide nonremovable moldings on outside of exterior doors and on corridor side of interior doors. Other moldings may be stationary or removable. Secure inside moldings to stationary moldings, or provide snap-on moldings. Muntins shall interlock at intersections and shall be fitted and welded to stationary moldings.

2.3 STANDARD STEEL FRAMES

SDI/DOOR A250.8, Level 4, except as otherwise specified. Form frames to sizes and shapes indicated, with welded corners at exterior doors and knock-down field-assembled corners at interior doors. Provide steel frames for doors, sidelights, and interior glazed panels, unless otherwise indicated.

2.3.1 Welded Frames

Continuously weld frame faces at corner joints. Mechanically interlock or continuously weld stops and rabbets. Grind welds smooth.

Weld frames in accordance with the recommended practice of the Structural Welding Code Sections 1 through 6, AWS D1.1/D1.1M and in accordance with the practice specified by the producer of the metal being welded.

2.3.2 Knock-Down Frames

Design corners for simple field assembly by concealed tenons, splice plates, or interlocking joints that produce square, rigid corners and a tight fit and maintain the alignment of adjoining members. Provide locknuts for bolted connections.

2.3.3 Stops and Beads

Form stops and beads from 0.9 mm thick steel. Provide for glazed and other openings in standard steel frames. Secure beads to frames with oval-head, countersunk Phillips self-tapping sheet metal screws or concealed clips and fasteners. Space fasteners approximately 300 to 400 mm on center. Miter molded shapes at corners. Butt or miter square or rectangular beads at corners.

2.3.4 Anchors

Provide anchors to secure the frame to adjoining construction. Provide

steel anchors, zinc-coated or painted with rust-inhibitive paint, not lighter than 1.2 mm thick.

2.3.4.1 Wall Anchors

Provide at least three anchors for each jamb. For frames which are more than 2285 mm in height, provide one additional anchor for each jamb for each additional 760 mm or fraction thereof.

a. Stud partitions: Weld or otherwise securely fasten anchors to backs of frames. Design anchors to be fastened to closed steel studs with sheet metal screws, and to open steel studs by wiring or welding;

b. Completed openings: Secure frames to previously placed concrete or masonry with expansion bolts in accordance with SDI/DOOR 111; and

2.4 WEATHERSTRIPPING

As specified in Section 08 71 00 DOOR HARDWARE.

2.5 HARDWARE PREPARATION

Provide minimum hardware reinforcing gages as specified in SDI/DOOR A250.6. Drill and tap doors and frames to receive finish hardware. Prepare doors and frames for hardware in accordance with the applicable requirements of SDI/DOOR A250.8 and SDI/DOOR A250.6. For additional requirements refer to ANSI/BHMA A156.115. Drill and tap for surface-applied hardware at the project site. Build additional reinforcing for surface-applied hardware into the door at the factory. Locate hardware in accordance with the requirements of SDI/DOOR A250.8, as applicable. Punch door frames , with the exception of frames that will have weatherstripping to receive a minimum of two rubber or vinyl door silencers on lock side of single doors and one silencer for each leaf at heads of double doors. Set lock strikes out to provide clearance for silencers.

2.6 FINISHES

2.6.1 Hot-Dip Zinc-Coated and Factory-Primed Finish

Fabricate exterior and interior doors and frames from hot dipped zinc coated steel, alloyed type, that complies with ASTM A924/A924Mand ASTM A653/A653M. The coating weight shall meet or exceed the minimum requirements for coatings having 122 grams per square meter, total both sides, i.e., ZF120. Repair damaged zinc-coated surfaces by the application of zinc dust paint. Thoroughly clean and chemically treat to insure maximum paint adhesion. Factory prime as specified in SDI/DOOR A250.8. Provide for exterior doors and interior doors.

2.6.2 Electrolytic Zinc-Coated Anchors and Accessories

Provide electrolytically deposited zinc-coated steel in accordance with ASTM A879/A879M, Commercial Quality, Coating Class A. Phosphate treat and factory prime zinc-coated surfaces as specified in SDI/DOOR A250.8.

2.7 FABRICATION AND WORKMANSHIP

Finished doors and frames shall be strong and rigid, neat in appearance, and free from defects, waves, scratches, cuts, dents, ridges, holes, warp, and buckle. Molded members shall be clean cut, straight, and true, with joints coped or mitered, well formed, and in true alignment. Dress exposed welded and soldered joints smooth. Design door frame sections for use with the wall construction indicated. Corner joints shall be well formed and in true alignment. Conceal fastenings where practicable. On wraparound frames for masonry partitions, provide a throat opening 3 mm larger than the actual masonry thickness. Design other frames in exposed masonry walls or partitions to allow sufficient space between the inside back of trim and masonry to receive caulking compound.

2.7.1 Grouted Frames

For frames to be installed in exterior walls and to be filled with mortar or grout, fill the stops with strips of rigid insulation to keep the grout out of the stops and to facilitate installation of stop-applied head and jamb seals.

2.8 PROVISIONS FOR GLAZING

Materials are specified in Section 08 81 00, GLAZING.

PART 3 EXECUTION

3.1 INSTALLATION

3.1.1 Frames

Set frames in accordance with SDI/DOOR A250.11. Plumb, align, and brace securely until permanent anchors are set. Anchor bottoms of frames with expansion bolts or powder-actuated fasteners. Build in or secure wall anchors to adjoining construction. Backfill frames with mortar. Coat inside of frames with corrosion-inhibiting bituminous material. For frames in exterior walls, ensure that stops are filled with rigid insulation before grout is placed.

3.1.2 Doors

Hang doors in accordance with clearances specified in SDI/DOOR A250.8. After erection and glazing, clean and adjust hardware.

3.2 PROTECTION

Protect doors and frames from damage. Repair damaged doors and frames prior to completion and acceptance of the project or replace with new, as directed. Wire brush rusted frames until rust is removed. Clean thoroughly. Apply an all-over coat of rust-inhibitive paint of the same type used for shop coat.

3.3 CLEANING

Upon completion, clean exposed surfaces of doors and frames thoroughly. Remove mastic smears and other unsightly marks.

3.4 SCHEDULE

Some metric measurements in this section are based on mathematical conversion of inch-pound measurements, and not on metric measurement commonly agreed to by the manufacturers or other parties. The inch-pound and metric measurements are as follows:

PRODUCTS	INCH-POUND	METRIC
Door thickness	1-3/4 inch	44.5 mm
Steel channels	16 gage	1.5 mm
Steel Sheet	23 gage	0.7 mm
	16 gage	1.5 mm
	20 gage	0.9 mm
	18 gage	1.2 mm
Anchor bolts	3/8 inch	10 mm

-- End of Section --

SECTION 08 11 16

ALUMINUM DOORS AND FRAMES
08/08

PART 1 GENERAL

1.1 REFERENCES

The publications listed below form a part of this specification to the extent referenced. The publications are referred to in the text by the basic designation only.

ALUMINUM ASSOCIATION (AA)

AA DAF45	(2003; Reaffirmed 2009) Designation System for Aluminum Finishes

ASTM INTERNATIONAL (ASTM)

ASTM A36/A36M	(2012) Standard Specification for Carbon Structural Steel
ASTM B209M	(2014) Standard Specification for Aluminum and Aluminum-Alloy Sheet and Plate (Metric)
ASTM B221M	(2013) Standard Specification for Aluminum and Aluminum-Alloy Extruded Bars, Rods, Wire, Profiles, and Tubes (Metric)
ASTM E1300	(2012a; E 2012) Determining Load Resistance of Glass in Buildings
ASTM E283	(2004; R 2012) Determining the Rate of Air Leakage Through Exterior Windows, Curtain Walls, and Doors Under Specified Pressure Differences Across the Specimen
ASTM E331	(2000; R 2009) Water Penetration of Exterior Windows, Skylights, Doors, and Curtain Walls by Uniform Static Air Pressure Difference
ASTM F1642	(2012) Standard Test Method for Glazing and Glazing Systems Subject to Airblast Loadings
ASTM F2248	(2012) Standard Practice for Specifying an Equivalent 3-Second Duration Design Loading for Blast Resistant Glazing Fabricated with Laminated Glass
ASTM F2927	(2012) Standard Test Methods for Door Systems for Airblast Loadings

1.2 PERFORMANCE REQUIREMENTS

1.2.1 1.1 REFERENCES

The publications listed below form a part of this section to the extent referenced. The publications are referred to within the text by the basic designation only.

NATIONAL FENESTRATION RATING COUNCIL (NFRC)

NFRC 100	(2014) Procedure for Determining Fenestration Product U-Factors

1.2.2 Structural

Exterior doors, frames and hardware shall be designed to resist equivalent static design loads in accordance with ASTM F1642 and ASTM F2927. Frame deflections shall not exceed L/160 of the unsupported member lengths. Equivalent static design loads for connections of window or door frame to the surrounding walls or hardware and associated connections, and glazing stop connections shall be in accordance with ASTM F2248 and ASTM E1300. Design supporting elements and their connections based on their ultimate capacities. Provide calculations of a Professional Engineer that substantiates compliance with these requirements. Use frames that provide an equivalent level of performance. Shapes and thicknesses of framing members shall be sufficient to withstand a design wind load of not less than 1.9 kPa of supported area with a deflection of not more than 1/175 times the length of the member and a safety factor of not less than 1.65. Provide glazing beads, moldings, and trim of not less than 1.25 mm nominal thickness.

1.2.3 Minimum Antiterrorism Performance

Glazed doors and side lights shall meet the minimum antiterrorism performance as specified in the paragraphs below. Conformance to the performance requirements shall be validated by one of the following methods.

1.2.3.1 Computational Design Analysis Method

Doors and side lights shall be designed to the criteria listed herein. Computational design analysis shall include calculations verifying the structural performance of each window proposed for use, under the given static equivalent loads.

Framing members shall restrict deflections of the edges of glazing they support to L/60 under two times (2X) the glazing resistance per the requirements of ASTM F2248 and ASTM E1300. Glazing resistance shall be greater than equivalent 3-second duration loading of 7200 pascal (where indicated per Window Schedule indicated on the drawings). L denotes the length of the glazing supported edge. (L is to be based on edge length of glazing in frame and not on the distance between anchors that fasten frame to the structure.)

The glazing frame bite for the window frames shall be in accordance with ASTM F2248.

Window frames shall be anchored to the supporting structure with anchors designed to resist two times (2X) the glazing resistance in accordance with ASTM F2248 and ASTM E1300.

1.2.3.2 Alternate Dynamic Design Analysis Method

As an alternative to the static equivalent load design approach described above, window framing members, anchors, and glazing may be designed using a dynamic analysis to prove the window system will provide performance equivalent to or better than a very low hazard rating in accordance with ASTM F1642 associated with the applicable low level of protection for the project.

1.2.3.3 Standard Airblast Test Method

As an alternative to either of the Computational Design Analysis Methods, each Minimum Antiterrorism window type shall be tested for evaluation of hazards generated from airblast loading in accordance with ASTM F1642 by an independent testing agency regularly engaged in blast testing. For proposed window systems that are of the same type as the tested system but of different size, the test results may be accepted provided the proposed window size is within the range from 25 percent smaller to 10 percent larger in area, than the tested window. Proposed windows of a size outside this range shall require testing to evaluate their hazard rating. Testing may be by shocktube or arena test. The test shall be performed on the entire proposed window system, which shall include, but not be limited to, the glazing, its framing system, operating devices, and all anchorage devices. Anchorage of the window frame or subframe shall replicate the method of installation to be used for the project. The minimum airblast loading parameters for the test shall be as follows: Peak positive pressure of 5.8 psi and positive phase impulse of 41.1 psi-msec. The hazard rating for the proposed window systems, as determined by the rating criteria of ASTM F1642, shall not exceed the "Very Low Hazard" rating (i.e. the "No Break", "No Hazard", "Minimal Hazard" and "Very Low Hazard" ratings are acceptable. "Low Hazard" and "High Hazard" ratings are unacceptable). Results of window systems previously tested by test protocols other than ASTM F1642 may be accepted provided the required loading, hazard level rating, and size limitations stated herein are met.

1.2.4 Air Infiltration

When tested in accordance with ASTM E283, air infiltration shall not exceed 2.63 by 10-5 cms per square meterof fixed area at a test pressure of 0.30 kPa (80 kilometers per hour wind).

1.2.5 Water Penetration

When tested in accordance with ASTM E331, there shall be no water penetration at a pressure of 0.38 kPa of fixed area.

1.2.6 Thermal Performance

Non-residential aluminum windows (including frames and glass) shall be certified by the National Fenestration Rating Council with a whole-window U-factor maximum of .35 W/m^2K in accordance with NFRC 100.

1.3 SUBMITTALS

Government approval is required for submittals with a "G" designation;

submittals not having a "G" designation are for Contractor Quality Control approval. Submittals with an "S" are for inclusion in the Sustainability Notebook, in conformance to Section 01 33 29 SUSTAINABILITY REPORTING. Submit the following in accordance with Section 01 33 00 SUBMITTAL PROCEDURES:

SD-02 Shop Drawings

Doors, windows and frames; G

Show elevations of each door type, size of doors and frames, metal gages, details of door and frame construction, methods of anchorage, glazing details, weatherstripping, provisions for and location of hardware, and details of installation.

SD-04 Samples

Finish sample

SD-05 Design Data

Standard Airblast Test

Structural calculations for deflection; G

SD-08 Manufacturer's Instructions

Doors and frames

Submit detail specifications and instructions for installation, adjustments, cleaning, and maintenance.

1.4 DELIVERY, STORAGE, AND HANDLING

Inspect materials delivered to the site for damage. Unload and store with minimum handling. Provide storage space in dry location with adequate ventilation, free from dust or water, and easily accessible for inspection and handling. Stack materials on nonabsorptive strips or wood platforms. Do not cover doors and frames with tarps, polyethylene film, or similar coverings. Protect finished surfaces during shipping and handling using manufacturer's standard method, except that no coatings or lacquers shall be applied to surfaces to which caulking and glazing compounds must adhere.

1.5 QUALITY CONTROL

1.5.1 Shop Drawing Requirements

Drawings shall indicate elevations of doors, windows and frames, full-size sections, thickness and gages of metal, fastenings, proposed method of anchoring, size and spacing of anchors, details of construction, method of glazing, details of operating hardware, mullion details, method and materials for weatherstripping, material and method of attaching subframes, installation details, and other related items.

1.5.2 Sample Requirements

1.5.2.1 Finish Sample Requirements

Submit color chart of standard factory-finish color coatings.

PART 2 PRODUCTS

2.1 DOORS AND FRAMES

Swing-type aluminum doors and frames of size, design, and location indicated. Provide doors complete with frames, framing members , subframes, transoms, adjoining sidelights, and accessories.

2.2 MATERIALS

2.2.1 Anchors

Stainless steel.

2.2.2 Weatherstripping

Continuous wool pile, silicone treated, or type recommended by door manufacturer.

2.2.3 Aluminum Alloy for Doors and Frames

ASTM B221M, Alloy 6063-T5 for extrusions. ASTM B209M, alloy and temper best suited for aluminum sheets and strips.

2.2.4 Fasteners

Hard aluminum or stainless steel.

2.2.5 Structural Steel

ASTM A36/A36M.

2.3 FABRICATION

2.3.1 Aluminum Frames

Extruded aluminum shapes with contours approximately as indicated. Provide removable glass stops and glazing beads for frames accommodating fixed glass. Use countersunk stainless steel Phillips screws for exposed fastenings, and space not more than 300 mm on center. Mill joints in frame members to a hairline fit, reinforce, and secure mechanically.

2.3.2 Aluminum Doors

Of type, size, and design indicated and not less than 45 mm thick. Minimum wall thickness, 3 mm, except beads and trim, 1.25 mm. Door sizes shown are nominal and shall include standard clearances as follows: 2.5 mm at hinge and lock stiles, 3 mm between meeting stiles, 3 mm at top rails, 5 mm between bottom and threshold, and 17 mm between bottom and floor. Bevel single-acting doors 2 or 3 mm at lock, hinge, and meeting stile edges.

2.3.2.1 Full Glazed Stile and Rail Doors

Doors shall have medium stiles and rails as indicated. Fabricate from extruded aluminum hollow seamless tubes or from a combination of open-shaped members interlocked or welded together. Fasten top and bottom rail together by means of welding or by 10 or 13 mm diameter

cadmium-plated tensioned steel tie rods. Provide an adjustable mechanism of jack screws or other methods in the top rail to allow for minor clearance adjustments after installation.

2.3.3 Welding and Fastening

Where possible, locate welds on unexposed surfaces. Dress welds on exposed surfaces smoothly. Select welding rods, filler wire, and flux to produce a uniform texture and color in finished work. Remove flux and spatter from surfaces immediately after welding. Exposed screws or bolts will be permitted only in inconspicuous locations, and shall have countersunk heads. Weld concealed reinforcements for hardware in place.

2.3.4 Weatherstripping

Provide on stiles and rails of exterior doors. Fit into slots which are integral with doors or frames. Weatherstripping shall be replaceable without special tools, and adjustable at meeting rails of pairs of doors. Installation shall allow doors to swing freely and close positively. Air leakage of a single leaf weatherstripped door shall not exceed 5.48 by 10-5 cubic meter per second of air per square meter of door area when tested in accordance with ASTM E283.

2.3.5 Anchors

On the backs of subframes, provide anchors of the sizes and shapes indicated for securing subframes to adjacent construction. Anchor transom bars at ends and mullions at head and sill. Reinforce and anchor freestanding door frames to floor construction as indicated on approved shop drawings and in accordance with manufacturer's recommendation. Place anchors near top and bottom of each jamb and at intermediate points not more than 635 mm apart.

2.3.6 Provisions for Hardware

Coordinate with Section 08 71 00 DOOR HARDWARE. Deliver hardware templates and hardware (except field-applied hardware) to the door manufacturer for use in fabrication of aluminum doors and frames. Cut, reinforce, drill, and tap doors and frames at the factory to receive template hardware. Provide doors to receive surface-applied hardware, except push plates, kick plates, and mop plates, with reinforcing only; drill and tap in the field. Provide hardware reinforcements of stainless steel or steel with hot-dipped galvanized finish, and secure with stainless steel screws.

2.3.7 Provisions for Glazing

Provide extruded aluminum snap-in glazing beads on interior side of doors. Provide extruded aluminum, theft-proof, snap-in glazing beads or fixed glazing beads on exterior or security side of doors. Glazing beads shall have vinyl insert glazing gaskets. Design glazing beads to receive glass of thickness indicated or specified.

2.3.8 Finishes

Provide exposed aluminum surfaces with factory finish of anodic coating.

2.3.8.1 Anodic Coating

Clean exposed aluminum surfaces and provide an anodized finish conforming to AA DAF45. Finish shall be clear (natural), designation AA-M10-C22-A31, Architectural Class II 0.01 to 0.0175 mm.

PART 3 EXECUTION

3.1 INSTALLATION

Plumb, square, level, and align frames and framing members to receive doors , adjoining sidelights. Anchor frames to adjacent construction as indicated and in accordance with manufacturer's printed instructions. Anchor bottom of each frame to rough floor construction with 2.4 mm thick stainless steel angle clips secured to back of each jamb and to floor construction; use stainless steel bolts and expansion rivets for fastening clip anchors. Hang doors to produce clearances specified in paragraph entitled "Aluminum Doors," of this section. After erection and glazing, adjust doors and hardware to operate properly.

3.2 PROTECTION FROM DISSIMILAR MATERIALS

3.2.1 Dissimilar Metals

Where aluminum surfaces come in contact with metals other than stainless steel, zinc, or small areas of white bronze, protect from direct contact to dissimilar metals.

3.2.1.1 Protection

Provide one of the following systems to protect surfaces in contact with dissimilar metals:

a. Paint the dissimilar metal with one coat of heavy-bodied bituminous paint.

b. Apply a good quality elastomeric sealant between the aluminum and the dissimilar metal.

c. Paint the dissimilar metal with one coat of primer and one coat of aluminum paint.

d. Use a nonabsorptive tape or gasket in permanently dry locations.

3.2.2 Drainage from Dissimilar Metals

In locations where drainage from dissimilar metals has direct contact with aluminum, provide protective paint to prevent aluminum discoloration.

3.2.3 Masonry and Concrete

Provide aluminum surfaces in contact with mortar, concrete, or other masonry materials with one coat of heavy-bodied bituminous paint.

3.2.4 Wood or Other Absorptive Materials

Provide aluminum surfaces in contact with absorptive materials subject to frequent moisture, and aluminum surfaces in contact with treated wood, with two coats of aluminum paint or one coat of heavy-bodied bituminous

paint. In lieu of painting the aluminum, the Contractor shall have the option of painting the wood or other absorptive surface with two coats of aluminum paint and sealing the joints with elastomeric sealant.

3.3 CLEANING

Upon completion of installation, clean door and frame surfaces in accordance with door manufacturer's written recommended procedure. Do not use abrasive, caustic, or acid cleaning agents.

3.4 PROTECTION

Protect doors and frames from damage and from contamination by other materials such as cement mortar. Prior to completion and acceptance of the work, restore damaged doors and frames to original condition, or replace with new ones.

-- End of Section --

SECTION 08 34 19.10 20

ROLLING SERVICE AND FIRE DOORS
02/12

PART 1 GENERAL

1.1 REFERENCES

The publications listed below form a part of this specification to the extent referenced. The publications are referred to within the text by the basic designation only.

ASTM INTERNATIONAL (ASTM)

ASTM A123/A123M	(2013) Standard Specification for Zinc (Hot-Dip Galvanized) Coatings on Iron and Steel Products
ASTM A653/A653M	(2013) Standard Specification for Steel Sheet, Zinc-Coated (Galvanized) or Zinc-Iron Alloy-Coated (Galvannealed) by the Hot-Dip Process
ASTM A780/A780M	(2009) Standard Practice for Repair of Damaged and Uncoated Areas of Hot-Dip Galvanized Coatings

NATIONAL FIRE PROTECTION ASSOCIATION (NFPA)

NFPA 80	(2013) Standard for Fire Doors and Other Opening Protectives

1.2 SUBMITTALS

Government approval is required for submittals with a "G" designation; submittals not having a "G" designation are for Contractor Quality Control approval. Submittals with an "S" are for inclusion in the Sustainability Notebook, in conformance to Section 01 33 29 SUSTAINABILITY REPORTING. Submit the following in accordance with Section 01 33 00 SUBMITTAL PROCEDURES:

SD-02 Shop Drawings

Rolling fire doors; G

Submit drawings for doors showing types, sizes, locations, metal gages, hardware provisions, installation details, and other details of construction.

SD-03 Product Data

Rolling fire doors; G

SD-08 Manufacturer's Instructions

Rolling fire doors

Submit manufacturer's currently recommended installation procedures for doors with the shop drawings.

SD-10 Operation and Maintenance Data

Rolling fire doors, Data Package 2.

Submit in accordance with Section 01 78 23 OPERATION AND MAINTENANCE DATA.

1.3 DELIVERY AND STORAGE

Protect doors and accessories from damage during delivery, storage, and handling. Clearly mark manufacturer's brand name. Store doors in dry locations with adequate ventilation, free from dust and water, and in such a manner as to permit access for inspection and handling. Handle doors carefully to prevent damage. Remove damaged items that cannot be restored to like-new condition and provide new items.

PART 2 PRODUCTS

2.1 ROLLING SERVICE DOORS

Shall be spring counterbalanced, rolling type, and shall be designed for use on interior openings, as indicated. Doors shall be operated by means of lifting handles. Doors shall be complete with guides, hardware, fastenings, operating mechanisms, and accessories. Doors shall be surface-mounted type with guides at jambs set back a sufficient distance to provide a clear opening when door is in open position.

2.1.1 Operational Cycle Life

All portions of the door, hardware and operating mechanism that is subject to movement, wear or stress fatigue must be designed to operate through a minimum number of 10 cycles per day.

2.2 FABRICATION

2.2.1 Curtains

Shall be formed of interlocking galvanized steel slats of shapes standard with the manufacturer, except that slats for exterior doors shall be flat type. Curtain shall roll up on a barrel supported at head of opening on brackets and be balanced by a torsion spring system in the barrel. Slats shall be of the gage required for the width indicated and the wind pressure specified above.

2.2.2 Endlocks

The ends of each slat or each alternate slat shall have malleable iron or galvanized steel endlocks of manufacturer's stock design.

2.2.3 Bottom Bar

The curtain shall have a steel bottom bar consisting of two angles of equal weight, one on each side, or an equivalent extruded aluminum

section, fastened to bottom of curtain.

2.2.4 Guides

Steel structural shapes or formed steel shapes fastened to wall with steel shapes not less than 5 mm thick. Guides shall be of sufficient depth or shall incorporate a steel locking bar to retain the curtain in place under the wind pressure specified. Securely attach guides to adjoining construction with not less than 10 mm diameter bolts, spaced near each end and not over 762 mm apart.

2.2.5 Barrel

Steel pipe or commercial welded steel tubing of proper diameter and thickness for the size of curtain. Deflection shall not exceed .76 mm per 305 mm of span. Close ends of barrel with cast-iron plugs, machined to fit the pipe and either pinned or attached with screws or welded in the spring barrel, except that drive end plug may be steel welded in place. Install within the barrel an oil-tempered, stress relieved, helical, counterbalancing steel spring, capable of producing sufficient torque to assure easy operation of the door curtain from any position. At least 80 percent of the door weight shall be counterbalanced at any position. Spring-tension shall be adjustable without removing the hood.

2.2.6 Brackets

Fabricate of steel plate to support the barrel, curtain, and operator and to form a supporting ring and end closure for the hood. Provide prelubricated, self-aligning ball bearings, shielded or sealed.

2.2.7 Hoods

Steel, not lighter than 0.531 mm thick formed to fit contour of end brackets and reinforced with rolled beads at top and bottom edges.

2.3 MANUAL OPERATION

2.3.1 Manual Push-Up Operation

Provide lifting handles on both sides of door and counterbalance in a manner to provide easy operation while raising or lowering the curtain by hand. The force required to operate the door shall not exceed 14 kgs. Provide pull-down straps or pole hooks on bottom rail of doors over 2134 mm high.

2.4 FINISHES

Slats and hoods shall be hot-dip galvanized, shop primed and factory painted. Finish other parts of coiling doors, except faying surfaces.

2.4.1 Primed Finish

Clean surfaces thoroughly, treat to assure maximum paint adherence, and provide a factory dip or spray coat of rust-inhibitive metallic oxide or synthetic resin primer on exposed surfaces.

2.4.2 Galvanized and Shop-Primed Finish

Surfaces specified shall have a zinc coating, a phosphate treatment, and a

shop prime coat of rust-inhibitive paint. The galvanized coating shall conform to ASTM A653/A653M, coating designation Z275, for steel sheets, except that hoods located on interior of the building may be Z180, and ASTM A123/A123M for iron and steel products. The weight of coatings for products shall be as designated in Table I of ASTM A123/A123M for the thickness of base metal to be coated. The prime coat shall be a type especially developed for materials treated by phosphates and adapted to application by dipping or spraying. Repair damaged zinc-coated surfaces by the materials and methods conforming to ASTM A780/A780M and spot prime. At the option of the Contractor, a two-part system including bonderizing, baked-on epoxy primer, and baked-on enamel top coat may be applied to slats and hoods before forming, in lieu of prime coat specified.

2.5 ROLLING FIRE DOORS

Shall conform to the requirements specified herein and to NFPA 80 for the class indicated. Doors shall bear labels of Underwriters Laboratories, or another independent testing agency which has follow-up service and which uses equivalent standards, indicating the applicable fire rating. The construction details necessary for labeled doors shall take precedence over details indicated or specified for service doors. Fire doors shall be equipped with automatic closing mechanism. Doors shall be forced into a closed position at a rate of descent of not more than 0.61 meters per second and not less than 0.15 meters per second without impact. The curtain shall be held against the sill until the release mechanism has been reset. The automatic closing mechanism shall not interfere with normal operation of the door. Fire doors shall be complete with hardware, accessories, and automatic closing device as required by NFPA 80.

PART 3 EXECUTION

3.1 INSTALLATION

Install doors in accordance with approved detail drawings and manufacturer's directions. Locate anchors and inserts for guides, brackets, hardware, and other accessories accurately. Upon completion, doors shall be weathertight and shall be free from warp, twist, or distortion.

3.2 FINAL ADJUSTMENT

Doors shall be lubricated and properly adjusted to operate freely.

-- End of Section --

SECTION 08 51 13

ALUMINUM WINDOWS
05/11

PART 1 GENERAL

1.1 REFERENCES

The publications listed below form a part of this specification to the extent referenced. The publications are referred to within the text by the basic designation only.

ALUMINUM ASSOCIATION (AA)

AA DAF45	(2003; Reaffirmed 2009) Designation System for Aluminum Finishes

AMERICAN ARCHITECTURAL MANUFACTURERS ASSOCIATION (AAMA)

AAMA 1503	(2009) Voluntary Test Method for Thermal Transmittance and Condensation Resistance of Windows, Doors and Glazed Wall Sections
AAMA 611	(1998; R 2004) Voluntary Specification for Anodized Architectural Aluminum
AAMA 701/702	(2004) Voluntary Specification for Pile Weatherstripping and Replaceable Fenestration Weatherseals
AAMA WSG.1	(1995) Window Selection Guide
AAMA/WDMA/CSA 101/I.S.2/A440	(2011) Standard/Specification for Windows, Doors, and Skylights

ASTM INTERNATIONAL (ASTM)

ASTM E1300	(2012a; E 2012) Determining Load Resistance of Glass in Buildings
ASTM F1642	(2012) Standard Test Method for Glazing and Glazing Systems Subject to Airblast Loadings
ASTM F2248	(2012) Standard Practice for Specifying an Equivalent 3-Second Duration Design Loading for Blast Resistant Glazing Fabricated with Laminated Glass

GREEN SEAL (GS)

GS-36	(2011) Commercial Adhesives

NATIONAL FENESTRATION RATING COUNCIL (NFRC)

NFRC 100	(2014) Procedure for Determining

	Fenestration Product U-Factors

SOUTH COAST AIR QUALITY MANAGEMENT DISTRICT (SCAQMD)

SCAQMD Rule 1168	(1989; R 2005) Adhesive and Sealant Applications

U.S. GREEN BUILDING COUNCIL (USGBC)

LEED NC	(2009) Leadership in Energy and Environmental Design(tm) New Construction Rating System

1.2 CERTIFICATION

Each prime window unit must bear the AAMA Label warranting that the product complies with AAMA/WDMA/CSA 101/I.S.2/A440. Certified test reports attesting that the prime window units meet the requirements of AAMA/WDMA/CSA 101/I.S.2/A440, including test size, will be acceptable in lieu of product labeling.

1.3 SUBMITTALS

Government approval is required for submittals with a "G" designation; submittals not having a "G" designation are for Contractor Quality Control approval. When used, a designation following the "G" designation identifies the office that will review the submittal for the Government. Submit the following in accordance with Section 01 33 00 SUBMITTAL PROCEDURES:

SD-02 Shop Drawings

Windows; G

Fabrication Drawings

SD-03 Product Data

Windows; G

Hardware; G

Fasteners; G; (LEED NC)

Window performance; G

Thermal-Barrier Windows; G

Submit documentation indicating percentage of post-industrial and post-consumer recycled content per unit of product. Indicate relative dollar value of recycled content products to total dollar value of products included in project.

Accessories; G

Adhesives; (LEED NC)

Submit manufacturer's product data, indicating VOC content.

Thermal performance
Environmental Data

SD-04 Samples

Finish Sample

SD-05 Design Data

Structural calculations for deflection; G

Design Analysis; G

Submit design analysis with calculations showing that the design of each different size and type of aluminum window unit and its anchorage to the structure meets the minimum antiterrorism standards required by paragraph "Minimum Antiterrorism Performance", unless conformance is demonstrated by Standard Airblast Test results. Calculations verifying the structural performance of each window proposed for use, under the given loads, shall be prepared and signed by a registered Professional Engineer. The window components and anchorage devices to the structure, as determined by the design analysis, shall be reflected in the shop drawings.

SD-06 Test Reports

Minimum condensation resistance factorStandard Airblast Test; G

For Minimum Antiterrorism windows, in lieu of a Design Analysis, results of airblast testing, whether by arena test or shocktube, shall be included in a test report, providing information in accordance with ASTM F1642, as prepared by the independent testing agency performing the test. The test results shall demonstrate the ability of each window proposed for use to withstand the airblast loading parameters and achieve the hazard level rating specified in paragraph "Standard Airblast Test Method".

SD-10 Operation and Maintenance Data

Windows, Data Package 1; G

Submit in accordance with Section 01 78 23 OPERATION AND MAINTENANCE DATA.

1.4 QUALITY ASSURANCE

1.4.1 Shop Drawing Requirements

Provide drawings that indicate elevations of windows, full-size sections, thickness and gages of metal, fastenings, proposed method of anchoring, size and spacing of anchors, details of construction, method of glazing, details of operating hardware, mullion details, method and materials for weatherstripping, installation details, and other related items.

1.4.2 Sample Requirements

1.4.2.1 Finish Sample Requirements

Submit color chart of standard factory color coatings when factory-finish color coating is to be provided.

1.4.3 Design Data Requirements

Submit calculations to substantiate compliance with deflection requirements and Minimum Antiterrorism Performance criteria. A registered Professional Engineer must provide calculations.

Submit design analysis with calculations showing that the design of each different size and type of aluminum window unit and its anchorage to the structure meets the requirements of paragraph "Minimum Antiterrorism Performance Criteria". Calculations verifying the structural performance of each window proposed for use, under the given loads, must be prepared and signed by a registered professional engineer. Reflect the window components and anchorage devices to the structure, as determined by the design analysis, in the shop drawings.

1.4.4 Test Report Requirements

Submit test reports for each type of window attesting that identical windows have been tested and meet the requirements specified herein for conformance to AAMA/WDMA/CSA 101/I.S.2/A440 including test size, and minimum condensation resistance factor (CRF), and, for Minimum Antiterrorism windows, in lieu of a Design Analysis, results of a Standard Airblast Test.

1.5 DELIVERY AND STORAGE

Deliver windows to project site in an undamaged condition. Use care in handling and hoisting windows during transportation and at the jobsite. Store windows and components out of contact with the ground, under a weathertight covering, so as to prevent bending, warping, or otherwise damaging the windows. Repair damaged windows to an "as new" condition as approved. If windows can not be repaired, provide a new unit.

1.6 PROTECTION

Protect finished surfaces during shipping and handling using the manufacturer's standard method. Do not apply coatings or lacquers to surfaces to which caulking and glazing compounds must adhere.

1.7 SUSTAINABLE DESIGN REQUIREMENTS

1.7.1 Environmental Data

Recycled Content

1.8 FIELD MEASUREMENTS

Take field measurements prior to preparation of the drawings and fabrication.

1.9 PERFORMANCE REQUIREMENTS

1.9.1 Wind Loading Design Pressure

Design window components, including mullions, hardware, and anchors, to withstand a wind-loading design pressure of at least 1.9 pascal.

1.9.2 Tests

Test windows proposed for use in accordance with AAMA/WDMA/CSA 101/I.S.2/A440 for the particular type and quality window specified.

Perform tests by a nationally recognized independent testing laboratory equipped and capable of performing the required tests. Submit the results of the tests as certified laboratory reports required herein.

Minimum design load for a uniform-load structural test must be 2400 pascal.

Test projected windows in accordance with the applicable portions of the AAMA WSG.1 for air infiltration, water resistance, uniform-load deflection, and uniform-load structural test.

1.10 DRAWINGS

Submit the Fabrication Drawings for aluminum window units showing complete window assembly including hardware, weatherstripping, and subframe assembly details.

1.11 WINDOW PERFORMANCE

Aluminum windows must meet the following performance requirements. Perform testing requirements by an independent testing laboratory or agency.

1.11.1 Structural Performance

Structural test pressures on window units must be for positive load (inward) and negative load (outward). After testing, there will be no glass breakage, permanent damage to fasteners, hardware parts, support arms or actuating mechanisms or any other damage which could cause window to be inoperable. There must be no permanent deformation of any main frame, sash or ventilator member in excess of the requirements established by AAMA/WDMA/CSA 101/I.S.2/A440 for the window types and classification specified in this section.

1.11.2 Minimum Antiterrorism Performance

Windows shall meet the minimum antiterrorism performance as specified in the paragraphs below. Conformance to the performance requirements shall be validated by one of the following methods.

1.11.2.1 Computational Design Analysis Method

Window frames, mullions, and sashes shall be designed to the criteria listed herein. Computational design analysis shall include calculations verifying the structural performance of each window proposed for use, under the given static equivalent loads.

Aluminum window framing members shall restrict deflections of the edges of glazing they support to L/60 under two times (2X) the glazing resistance per the requirements of ASTM F2248 and ASTM E1300. Glazing resistance shall be greater than equivalent 3-second duration loading of 7200 pascal (where indicated per Window Schedule indicated on the drawings). L denotes the length of the glazing supported edge. (L is to be based on edge length of glazing in frame and not on the distance between anchors that fasten frame to the structure.)

The glazing frame bite for the window frames shall be in accordance with ASTM F2248.

Window frames shall be anchored to the supporting structure with anchors designed to resist two times (2X) the glazing resistance in accordance with ASTM F2248 and ASTM E1300.

1.11.2.2 Alternate Dynamic Design Analysis Method

As an alternative to the static equivalent load design approach described above, window framing members, anchors, and glazing may be designed using a dynamic analysis to prove the window system will provide performance equivalent to or better than a very low hazard rating in accordance with ASTM F1642 associated with the applicable low level of protection for the project.

1.11.2.3 Standard Airblast Test Method

As an alternative to either of the Computational Design Analysis Methods, each Minimum Antiterrorism window type shall be tested for evaluation of hazards generated from airblast loading in accordance with ASTM F1642 by an independent testing agency regularly engaged in blast testing. For proposed window systems that are of the same type as the tested system but of different size, the test results may be accepted provided the proposed window size is within the range from 25 percent smaller to 10 percent larger in area, than the tested window. Proposed windows of a size outside this range shall require testing to evaluate their hazard rating. Testing may be by shocktube or arena test. The test shall be performed on the entire proposed window system, which shall include, but not be limited to, the glazing, its framing system, operating devices, and all anchorage devices. Anchorage of the window frame or subframe shall replicate the method of installation to be used for the project. The minimum airblast loading parameters for the test shall be as follows: Peak positive pressure of 5.8 psi and positive phase impulse of 41.1 psi-msec. The hazard rating for the proposed window systems, as determined by the rating criteria of ASTM F1642, shall not exceed the "Very Low Hazard" rating (i.e. the "No Break", "No Hazard", "Minimal Hazard" and "Very Low Hazard" ratings are acceptable. "Low Hazard" and "High Hazard" ratings are unacceptable). Results of window systems previously tested by test protocols other than ASTM F1642 may be accepted provided the required loading, hazard level rating, and size limitations stated herein are met.

1.11.3 Air Infiltration

Air infiltration must not exceed the amount established by AAMA/WDMA/CSA 101/I.S.2/A440 for each window type.

1.11.4 Water Penetration

Water penetration must not exceed the amount established by AAMA/WDMA/CSA 101/I.S.2/A440 for each window type.

1.11.5 Thermal Performance

Non-residential aluminum windows (including frames and glass) shall be certified by the National Fenestration Rating Council with a whole-window U-factor maximum of .35 W/m^2K in accordance with NFRC 100.

1.12 WARRANTY

Provide Manufacturer's standard performance guarantees or warranties that extend beyond a 1 year period.

PART 2 PRODUCTS

2.1 WINDOWS

Provide prime windows that comply with AAMA/WDMA/CSA 101/I.S.2/A440 and the requirements specified herein. In addition to compliance with AAMA/WDMA/CSA 101/I.S.2/A440, window framing members for each individual light of glass must not deflect to the extent that deflection perpendicular to the glass light exceeds L/175 of the glass edge length when subjected to uniform loads at specified design pressures. Provide Structural calculations for deflection to substantiate compliance with deflection requirements. Provide windows of types, performance classes, performance grades, combinations, and sizes indicated or specified. See Section 01 33 29 LEED(tm) DOCUMENTATION for cumulative total recycled content requirements for Operations Building. Window materials may contain post-consumer or post-industrial recycled content. Design windows to accommodate hardware, glass, weatherstripping, screens, and accessories to be furnished. Each window must be a complete factory assembled unit with or without glass installed. Dimensions shown are minimum. Provide windows with insulating glass and thermal break necessary to achieve a minimum Condensation Resistance Factor (CRF) of 50 when tested in accordance with AAMA 1503.

2.1.1 Window Materials

Window frames and sash members, mullions, mullion covers, and glazing beads shall be fabricated in accordance with AAMA/WDMA/CSA 101/I.S.2/A440.

Weatherstripping will be woven wool pile weatherstripping 5.3 millimeter thick, conforming to AAMA 701/702, or polypropylene multifilament fiber weatherstripping installed in an integral weatherstripping groove in the sash or frame, and flexible polyvinylchloride weatherstripping installed in the sill member.

2.1.2 Fixed Windows (F)

Type F-CW30 (Optional Performance Grade).

2.1.3 Glass and Glazing

Materials are specified in Section 08 81 00 GLAZING.

2.1.4 Caulking and Sealing

Are specified in Section 07 92 00 JOINT SEALANTS.

2.1.5 Weatherstripping

AAMA/WDMA/CSA 101/I.S.2/A440.

2.2 FABRICATION

Fabrication of window units must comply with AAMA/WDMA/CSA 101/I.S.2/A440.

2.2.1 Provisions for Glazing

Design windows and rabbets suitable for glass thickness shown or specified. For minimum antiterrorism windows, attach glazing to its supporting frame using structural silicone sealant or adhesive glazing tape in accordance with ASTM F2248. Design sash for double glazing and for securing glass with glazing channels, or glazing compound.

2.2.2 Weatherstripping

Provide for ventilating sections of all windows to ensure a weather-tight seal meeting the infiltration requirements specified in AAMA/WDMA/CSA 101/I.S.2/A440. Provide easily replaceable factory-applied weatherstripping. Use molded vinyl, molded or molded-expanded neoprene or molded or expanded Ethylene Propylene Diene Terpolymer (EPDM) compression-type weatherstripping for compression contact surfaces. Use treated woven pile or wool, or polypropylene or nylon pile bonded to nylon fabric and metal or plastic backing strip weatherstripping for sliding surfaces. Do no use neoprene or polyvinylchloride weatherstripping where they will be exposed to direct sunlight.

2.2.3 Fasteners

Fabricated from 100 percent re-melted steel. Use fasteners as standard with the window manufacturer for windows, trim, and accessories. Self-tapping sheet-metal screws are not acceptable for material more than 2 mm thick.

2.2.4 Adhesives

Comply with applicable regulations regarding toxic and hazardous materials, GS-36, SCAQMD Rule 1168, and as specified in Section 07 92 00 JOINT SEALANTS.

2.2.5 Drips and Weep Holes

Provide continuous drips over heads of top ventilators. Where fixed windows adjoin ventilators, drips must be continuous across tops of fixed windows. Provide drips and weep holes as required to return water to the outside.

2.2.6 Combination Windows

Windows used in combination must be the same class and grade and will be factory assembled. Where factory assembly of individual windows into larger units is limited by transportation considerations, prefabricate, match mark, transport, and field assemble.

2.2.7 Mullions and Transom Bars

Provide mullions between multiple window units to resist two times (2X) glazing resistance in accordance with ASTM F2248 and ASTM E1300 at Operations Building. Provide mullions with a thermal break. Secure mullions and transom bars to adjoining construction and window units in such a manner as to permit expansion and contraction and to form a weathertight joint. Provide mullion covers on the interior and exterior to completely close exposed joints and recesses between window units and to present a neat appearance.

2.2.8 Accessories

Provide windows complete with necessary hardware, fastenings, clips, fins, anchors, glazing beads, and other appurtenances necessary for complete installation and proper operation. Furnish extruded aluminum subframe receptors and subsill with each window unit.

2.2.8.1 Hardware

AAMA/WDMA/CSA 101/I.S.2/A440. The item, type, and functional characteristics must be the manufacturer's standard for the particular window type. Provide hardware of suitable design and of sufficient strength to perform the function for which it is used. Equip all operating ventilators with a lock or latching device which can be secured from the inside.

2.2.8.2 Fasteners

Provide concealed anchors of the type recommended by the window manufacturer for the specific type of construction. Anchors and fasteners must be compatible with the window and the adjoining construction. Provide a minimum of three anchors for each jamb located approximately 150 mm from each end and at midpoint.

2.2.8.3 Window Anchors

Anchoring devices for installing windows must be made of aluminum, cadmium-plated steel, stainless steel, or zinc-plated steel conforming to AAMA/WDMA/CSA 101/I.S.2/A440.

2.2.9 Finishes

Exposed aluminum surfaces must be factory finished with an anodic coating. All windows for each building will have the same finish.

2.2.9.1 Anodic Coating

Clean exposed aluminum surfaces and provide an anodized finish conforming to AA DAF45 and AAMA 611. Finish must be:

a. Architectural Class I (0.0175 mm or thicker), designation AA-M10-C22-A41, clear (natural) anodized.

2.3 THERMAL-BARRIER WINDOWS

Provide thermal-barrier windows, complete with accessories and fittings,

where indicated at the Operations Building.

Specify material and construction except as follows:

a. Aluminum alloy must be 6063-T6.

b. Frame construction, including operable sash, must be factory-assembled and factory-sealed inner and outer aluminum completely separated from metal-to-metal contact. Join assembly by a continuous, concealed, low conductance divider housed in an interlocking extrusion of the inner frame. Metal fasteners, straps, or anchors will not bridge the connection between the inner and outer frame.

c. Operating hardware for each sash must consist of spring-loaded nylon cushion blocks and pin locks designed to lock in predetermined locations.

d. Sash must be completely separated from metal-to-metal contact by means of woven-pile weatherstripping, plastic, or elastomeric separation members.

e. Operating and storm sash will be factory-glazed with the type of glass indicated and of the quality specified in Section 08 81 00 GLAZING.

PART 3 EXECUTION

3.1 SCHEDULE

Some metric measurements in this section are based on mathematical conversion of inch-pound measurements, and not on metric measurement commonly agreed to by the manufacturers or other parties. The inch-pound and metric measurements are as follows:

PRODUCTS	INCH-POUND	METRIC
Metal Casing	0.0625 inch	1.59 mm
Aluminum Tube (Diameter)	0.0625 inch	1.59 mm
	1 inch	25 mm

3.2 INSTALLATION

3.2.1 Method of Installation

Install in accordance with the window manufacturer's printed instructions and details. Build in windows as the work progresses or install without forcing into prepared window openings. Set windows at proper elevation, location, and reveal; plumb, square, level, and in alignment; and brace, strut, and stay properly to prevent distortion and misalignment. Protect ventilators and operating parts against accumulation of dirt and building materials by keeping ventilators tightly closed and locked to frame. Bed screws or bolts in sill members, joints at mullions, contacts of windows with sills, built-in fins, and subframes in mastic sealant of a type recommended by the window manufacturer. Install and caulk windows in a manner that will prevent entrance of water and wind. Fasten insect screens securely in place.

3.2.2 Dissimilar Materials

Where aluminum surfaces are in contact with, or fastened to masonry, concrete, wood, or dissimilar metals, except stainless steel or zinc, protect the aluminum surface from dissimilar materials as recommended in the Appendix to AAMA/WDMA/CSA 101/I.S.2/A440. Do not coat surfaces in contact with sealants after installation with any type of protective material.

3.2.3 Anchors and Fastenings

Make provision for securing units to each other, to masonry, and to other adjoining construction. Windows installed in masonry walls must have head and jamb members designed to recess into masonry wall not less than 11 mm.

3.2.4 Adjustments After Installation

After installation of windows and completion of glazing and field painting, adjust all ventilators and hardware to operate smoothly and to provide weathertight sealing when ventilators are closed and locked. Lubricate hardware and operating parts as necessary. Verify that products are properly installed, connected, and adjusted.

3.3 CLEANING

Clean interior and exterior surfaces of window units of mortar, plaster, paint spattering spots, and other foreign matter to present a neat appearance, to prevent fouling of weathering surfaces and weather-stripping, and to prevent interference with the operation of hardware. Replace all stained, discolored, or abraded windows that cannot be restored to their original condition with new windows.

3.4 WASTE MANAGEMENT

Separate corrugated cardboard and protective materials in accordance with the Waste Management Plan and place in designated areas for reuse or recycling. Place materials defined as hazardous or toxic waste in designated containers. Close and seal tightly all partly used sealant containers and store protected in well ventilated fire-safe area at moderate temperature. Place used sealant tubes and containers in areas designated for hazardous materials.

-- End of Section --

THIS PAGE HAS BEEN INTENTIONALLY LEFT BLANK

SECTION 08 71 00

DOOR HARDWARE
08/08

PART 1 GENERAL

1.1 REFERENCES

The publications listed below form a part of this specification to the extent referenced. The publications are referred to in the text by the basic designation only.

ASTM INTERNATIONAL (ASTM)

ASTM E283	(2004; R 2012) Determining the Rate of Air Leakage Through Exterior Windows, Curtain Walls, and Doors Under Specified Pressure Differences Across the Specimen

BUILDERS HARDWARE MANUFACTURERS ASSOCIATION (BHMA)

ANSI/BHMA A156.1	(2013) Butts and Hinges
ANSI/BHMA A156.16	(2013) Auxiliary Hardware
ANSI/BHMA A156.18	(2012) Materials and Finishes
ANSI/BHMA A156.2	(2011) Bored and Preassembled Locks and Latches
ANSI/BHMA A156.21	(2009) Thresholds
ANSI/BHMA A156.3	(2014) Exit Devices
ANSI/BHMA A156.4	(2013) Door Controls - Closers
ANSI/BHMA A156.6	(2010) Architectural Door Trim
ANSI/BHMA A156.7	(2003; R 2009) Template Hinge Dimensions
BHMA A156.22	(2012) Door Gasketing and Edge Seal Systems

NATIONAL FIRE PROTECTION ASSOCIATION (NFPA)

NFPA 101	(2012; Amendment 1 2012) Life Safety Code
NFPA 80	(2013) Standard for Fire Doors and Other Opening Protectives

STEEL DOOR INSTITUTE (SDI/DOOR)

SDI/DOOR A250.8	(2003; R2008) Recommended Specifications for Standard Steel Doors and Frames

UNDERWRITERS LABORATORIES (UL)

UL Bld Mat Dir (2012) Building Materials Directory

1.2 SUBMITTALS

Submittals with an "S" are for inclusion in the Sustainability Notebook, in conformance to Section 01 33 29SUSTAINABILITY REQUIREMENTS. Submit the following in accordance with Section 01 33 00 SUBMITTAL PROCEDURES.

SD-02 Shop Drawings

Hardware schedule; G

Keying system; G

SD-03 Product Data

Hardware items; G

SD-08 Manufacturer's Instructions

Installation

SD-10 Operation and Maintenance Data

Hardware Schedule items, Data Package 1; G

Submit data package in accordance with Section 01 78 23 OPERATION AND MAINTENANCE DATA.

SD-11 Closeout Submittals

Key Bitting

1.3 HARDWARE SCHEDULE

Prepare and submit hardware schedule in the following form:

Hardware Item	Quantity	Size	Reference Publi-cation Type No.	Finish	Mfr Name and Catalog No.	Key Control Symbols	UL Mark (If fire rated and listed)	BHMA Finish Desig-nation

1.4 KEY BITTING CHART REQUIREMENTS

Submit key bitting charts to the Contracting Officer prior to completion of the work. Include:

a. Complete listing of all keys (AA1, AA2, etc.).

b. Complete listing of all key cuts (AA1-123456, AA2-123458).

c. Tabulation showing which key fits which door.

d. Copy of floor plan showing doors and door numbers.

e. Listing of 20 percent more key cuts than are presently required in each master system.

1.5 QUALITY ASSURANCE

1.5.1 Hardware Manufacturers and Modifications

Provide, as far as feasible, locks, hinges, pivots, and closers of one lock, hinge, pivot, or closer manufacturer's make. Modify hardware as necessary to provide features indicated or specified.

1.5.2 Key Shop Drawings Coordination Meeting

Prior to the submission of the key shop drawing, the Contracting Officer, Contractor, Door Hardware subcontractor, using Activity and Base Locksmith shall meet to discuss key requirements for the facility.

1.6 DELIVERY, STORAGE, AND HANDLING

Deliver hardware in original individual containers, complete with necessary appurtenances including fasteners and instructions. Mark each individual container with item number as shown in hardware schedule. Deliver permanent keys to the Contracting Officer, either directly or by certified mail. Deliver construction master keys with the locks.

PART 2 PRODUCTS

2.1 TEMPLATE HARDWARE

Provide hardware to be applied to metal or to prefinished doors manufactured to template. Promptly furnish template information or templates to door and frame manufacturers. Conform to ANSI/BHMA A156.7 for template hinges. Coordinate hardware items to prevent interference with other hardware.

2.2 HARDWARE FOR FIRE DOORS AND EXIT DOORS

Provide all hardware necessary to meet the requirements of NFPA 80 for fire doors and NFPA 101 for exit doors, as well as to other requirements indicated, even if such hardware is not specifically mentioned under paragraph entitled "Hardware Schedule." Provide the label of Underwriters Laboratories, Inc. for such hardware listed in UL Bld Mat Dir or labeled and listed by another testing laboratory acceptable to the Contracting Officer.

2.3 HARDWARE ITEMS

Clearly and permanently mark with the manufacturer's name or trademark, hinges, pivots, locks, latches, exit devices, bolts and closers where the identifying mark will be visible after the item is installed. For closers with covers, the name or trademark may be beneath the cover.

2.3.1 Hinges

ANSI/BHMA A156.1, 114 by 114 mm unless otherwise indicated. Construct

loose pin hinges for exterior doors and reverse-bevel interior doors so that pins will be nonremovable when door is closed. Other antifriction bearing hinges may be provided in lieu of ball-bearing hinges.

2.3.2 Pivots

ANSI/BHMA A156.4.

2.3.3 Locks and Latches

2.3.3.1 Bored Locks and Latches

ANSI/BHMA A156.2, Series 4000, Grade 1.

2.3.3.2 High Security Combination Locks

Kaba Mas LLC, model CDX-10 high security lock, battery powered, combination deadbolt with 25 mm throw and life safety feature which allows egress from interior side. Compliant with Federal Specificaitons FF-L-2890.

2.3.4 Exit Devices

ANSI/BHMA A156.3, Grade 1. Provide adjustable strikes for rim type and vertical rod devices. Provide open back strikes for pairs of doors with mortise and vertical rod devices. Provide touch bars in lieu of conventional crossbars and arms. Provide escutcheons, not less than 178 by 57 mm.

2.3.5 Cylinders and Cores

Provide cylinders and cores for new locks, including locks provided under other sections of this specification. Provide cylinders and cores with six pin tumblers. Provide cylinders from products of one manufacturer, and provide cores from the products of one manufacturer. Rim cylinders, mortise cylinders, and knobs of bored locksets have interchangeable cores which are removable by special control keys. Stamp each interchangeable core with a key control symbol in a concealed place on the core.

2.3.6 Keying System

Provide a master keying system Provide construction interchangeable cores.

2.3.7 Keys

Furnish one file key, one duplicate key, and one working key for each key change and for each master keying system. Furnish one additional working key for each lock of each keyed-alike group. Furnish 2 control keys for removable cores. Stamp each key with appropriate key control symbol and "U.S. property - Do not duplicate." Do not place room number on keys.

2.3.8 Closers

ANSI/BHMA A156.4, Series C02000, Grade 1, with PT 4C. Provide with brackets, arms, mounting devices, fasteners, full size covers, except at storefront mounting, pivots, and other features necessary for the particular application. Size closers in accordance with manufacturer's recommendations, or provide multi-size closers, Sizes 1 through 6, and

list sizes in the Hardware Schedule. Provide manufacturer's 10 year warranty.

2.3.8.1 Identification Marking

Engrave each closer with manufacturer's name or trademark, date of manufacture, and manufacturer's size designation located to be visible after installation.

2.3.9 Door Protection Plates

ANSI/BHMA A156.6.

2.3.9.1 Sizes of Mop and Kick Plates

50 mm less than door width for single doors; 25 mm less than door width for pairs of doors. Provide 200 mm kick plates for flush doors. Provide 100 mm mop plates.

2.3.10 Door Stops and Silencers

ANSI/BHMA A156.16. Silencers Type L03011. Provide three silencers for each single door, two for each pair.

2.3.11 Thresholds

ANSI/BHMA A156.21. Use J35100, with vinyl or silicone rubber insert in face of stop, for exterior doors opening out, unless specified otherwise.

2.3.12 Weather Stripping Gasketing

BHMA A156.22. Provide the type and function designation where specified in paragraph entitled "Hardware Schedule". Provide a set to include head and jamb seals, sweep strips, and, for pairs of doors, astragals. Astragals to be non-overlapping. Air leakage of weather stripped doors not to exceed 5.48 by 10-5 cms per minute of air per square meter of door area when tested in accordance with ASTM E283. Provide weather stripping with one of the following:

2.3.12.1 Extruded Aluminum Retainers

Extruded aluminum retainers not less than 1.25 mm wall thickness with vinyl, neoprene, silicone rubber, or polyurethane inserts. Provide clear (natural) anodized aluminum.

2.3.13 Special Tools

Provide special tools, such as spanner and socket wrenches and dogging keys, required to service and adjust hardware items.

2.4 FASTENERS

Provide fasteners of proper type, quality, size, quantity, and finish with hardware. Provide stainless steel or nonferrous metal fasteners that are exposed to weather. Provide fasteners of type necessary to accomplish a permanent installation.

2.5 FINISHES

ANSI/BHMA A156.18. Provide hardware in BHMA 630 finish (satin stainless steel), unless specified otherwise. Provide items not manufactured in stainless steel in BHMA 626 finish (satin chromium plated) over brass or bronze, except aluminum paint finish for surface door closers, and except BHMA 652 finish (satin chromium plated) for steel hinges. Provide hinges for exterior doors in stainless steel with BHMA 630 finish or chromium plated brass or bronze with BHMA 626 finish. Furnish exit devices in BHMA 626 finish in lieu of BHMA 630 finish. Match exposed parts of concealed closers to lock and door trim. Match hardware finish for aluminum doors to the doors.

PART 3 EXECUTION

3.1 INSTALLATION

Install hardware in accordance with manufacturers' printed installation instructions. Fasten hardware to wood surfaces with full-threaded wood screws or sheet metal screws. Provide machine screws set in expansion shields for fastening hardware to solid concrete and masonry surfaces. Provide toggle bolts where required for fastening to hollow core construction. Provide through bolts where necessary for satisfactory installation.

3.1.1 Weather Stripping Installation

Handle and install weather stripping to prevent damage. Provide full contact, weather-tight seals. Operate doors without binding.

3.1.1.1 Stop-Applied Weather Stripping

Fasten in place with color-matched sheet metal screws not more than 225 mm on center after doors and frames have been finish painted.

3.1.2 Threshold Installation

Extend thresholds the full width of the opening and notch end for jamb stops. Set thresholds in a full bed of sealant and anchor to floor with cadmium-plated, countersunk, steel screws in expansion sleeves.

3.2 FIRE DOORS AND EXIT DOORS

Install hardware in accordance with NFPA 80 for fire doors, NFPA 101 for exit doors.

3.3 HARDWARE LOCATIONS

SDI/DOOR A250.8, unless indicated or specified otherwise.

a. Kick and Armor Plates: Push side of single-acting doors. Both sides of double-acting doors.

b. Mop Plates: Bottom flush with bottom of door.

3.4 FIELD QUALITY CONTROL

After installation, protect hardware from paint, stains, blemishes, and

other damage until acceptance of work. Submit notice of testing 15 days before scheduled, so that testing can be witnessed by the Contracting Officer. Adjust hinges, locks, latches, bolts, holders, closers, and other items to operate properly. Demonstrate that permanent keys operate respective locks, and give keys to the Contracting Officer. Correct, repair, and finish, as directed, errors in cutting and fitting and damage to adjoining work.

3.5 HARDWARE SETS

HW-01 (Doors P101.1, F101.1, F101.2, F102.1, each pair)	
3 Pair Hinges	A5112 x 630 NRP
1 Exit Device	Type 2, Function 08 x 626
1 Exit Device	Type 2, Function 02 x 626
2 Closers	C02061 PT4G
2 Kick Plates	J102 x 630
1 Set Weatherstripping Sweeps and Astragals	As Specified
1 Threshold	J35100, Barrier Free
HW-02 (Doors P101.2, F102.2, F104.1, 110.1 each leaf)	
1 1/2 Pair Hinges	A5112 x 630 NRP
1 Exit Device with lever	Type 1, Function 08 x 626
1 Closer	C02021 PT4G
1 Kick Plate	J102 x 630
1 Set Weatherstripping	As Specified
1 Threshold	J35100, Barrier Free
HW-03 (Doors F103.1, 111.1, 112.1 each leaf)	
1 1/2 Pair Hinges	A8112 x 626
1 Privacy Lockset	F76 x 626
1 Mop Plate	J103
1 Wall Stop	L02251
HW-04 (Doors 102.1, 108.1, 115.2)	
2 Top and Bottom Pivots	C07131
1 Deadbolt lock with thumb turn	E1251 x 626

1 Closer	C02021 with O.F. PT-4G
1 Pull, 1" dia. x 12"	J402 x 626
1 Pushbar, 1" dia.	J501 x 626
1 Set Weatherstripping	As specified
1 Threshold	J35100, barrier free
HW-05, (Doors 101.1, 101.2, each leaf)	
2 Top and Bottom Pivots	C07131
1 Rim Exit Device with Lever and Entrance Function	Type 4, function 08 x 626
1 Closer	C02021 with O.F. PT-4G
1 Set Weatherstripping	As Specified
1 Threshold	J35100, barrier free
HW-06 (Door 103.1, each leaf)	
2 Top and Bottom Pivots	C07131
1 Passage Lockset	F75 x 626
1 Closer	C02021 with O.F. PT-4G
1 Wall Stop	L02251
HW-07 (Doors 104.1, 105.1, 106.1, each leaf)	
1 1/2 Pair Hinges	A8112 x 626
1 Entrance/Office Lockset	F82 x 626
1 Wall Stop	L02251
HW-08 (Door 109.1, each leaf)	
1 1/2 Pair Hinges	A8112 x 626
1 Passage Lockset	F75 x 626

1 Wall Stop	L02251
HW-09 (Door 115.1, each leaf)	
1 1/2 Pair Hinges	A5112 x 626
1 Passage Lockset	F75 x 626
1 Closer	C02021 PT-4G
1 Wall Stop	L02251
HW-10 (Doors 116.1, 117.1, each leaf)	
1 1/2 Pair Hinges	A5112 x 626
1 Storeroom Lockset	F86 x 626
1 Closer	C02021 PT-4G
1 Wall Stop	L02251
HW-11 (Doors 113.1, 114.1, each leaf)	
1 1/2 Pair Hinges	A5112 x 626
1 Pull 20 mm dia. x 200 mm Long with Plate	J405 x 630
1 Push Plate	J301 x 630
1 Closer	C0221 PT-4G
1 Wall Stop	L02251
1 Mop Plate	J103 x 630
HW-12 (Doors 107.1, each leaf)	
1 1/2 Pair Hinges	A5112 x 626
1 High Security Combination Lock	FFL-L-2890
1 Strike	To Suit Lock
1 Closer	C02021 PT-4

1 Pull 20mm dia x 200 mm Long with Plate	J405 x 630
1 Push Plate	J301 x 630
1 Wall Stop	L02251

Provide hardware for aluminum doors under this section. Deliver Hardware templates and hardware, except field-applied hardware to the aluminum door and frame manufacturer for use in fabricating the doors and frames.

-- End of Section --

SECTION 08 81 00

GLAZING
08/11

PART 1 GENERAL

1.1 REFERENCES

The publications listed below form a part of this specification to the extent referenced. The publications are referred to within the text by the basic designation only.

AMERICAN NATIONAL STANDARDS INSTITUTE (ANSI)

ANSI Z97.1	(2009; Errata 2010) Safety Glazing Materials Used in Buildings - Safety Performance Specifications and Methods of Test

ASTM INTERNATIONAL (ASTM)

ASTM C1036	(2010; E 2012) Standard Specification for Flat Glass
ASTM C1048	(2012; E 2012) Standard Specification for Heat-Treated Flat Glass - Kind HS, Kind FT Coated and Uncoated Glass
ASTM C1172	(2009; E 2011) Standard Specification for Laminated Architectural Flat Glass
ASTM C1184	(2014) Standard Specification for Structural Silicone Sealants
ASTM C509	(2006; R 2011) Elastomeric Cellular Preformed Gasket and Sealing Material
ASTM C864	(2005; R 2011) Dense Elastomeric Compression Seal Gaskets, Setting Blocks, and Spacers
ASTM C920	(2014a) Standard Specification for Elastomeric Joint Sealants
ASTM D2287	(2012) Nonrigid Vinyl Chloride Polymer and Copolymer Molding and Extrusion Compounds
ASTM D395	(2014) Standard Test Methods for Rubber Property - Compression Set
ASTM E1300	(2012a; E 2012) Determining Load Resistance of Glass in Buildings
ASTM E413	(2010) Rating Sound Insulation
ASTM E90	(2009) Standard Test Method for Laboratory Measurement of Airborne Sound Transmission

	Loss of Building Partitions and Elements
ASTM F2248	(2012) Standard Practice for Specifying an Equivalent 3-Second Duration Design Loading for Blast Resistant Glazing Fabricated with Laminated Glass

GLASS ASSOCIATION OF NORTH AMERICA (GANA)

GANA Glazing Manual	(2004) Glazing Manual
GANA Sealant Manual	(2008) Sealant Manual

INSULATING GLASS MANUFACTURERS ALLIANCE (IGMA)

IGMA TB-3001	(2001) Guidelines for Sloped Glazing
IGMA TM-3000	(1990; R 2004) North American Glazing Guidelines for Sealed Insulating Glass Units for Commercial & Residential Use
IGMA TR-1200	(1983; R 2007) Guidelines for Commercial Insulating Glass Dimensional Tolerances

1.2 SUBMITTALS

Government approval is required for submittals with a "G" designation; submittals not having a "G" designation are for Contractor Quality Control approval. Submittals with an "S" are for inclusion in the Sustainability Notebook, in conformance to Section 01 33 29 SUSTAINABILITY REQUIREMENTS. Submit the following in accordance with Section 01 33 00 SUBMITTAL PROCEDURES:

SD-02 Shop Drawings

Drawings showing complete details of the proposed setting methods, mullion details, edge blocking, size of openings, frame details, materials, and types and thickness of glass.

Drawings showing complete details of the proposed setting methods, mullion details, edge blocking, size of openings, frame details, materials, and types and thickness of glass.

SD-03 Product Data

Insulating Glass; G

Glazing Accessories; G

Manufacturer's descriptive product data, handling and storage recommendations, installation instructions, and cleaning instructions.

Environmental Data

SD-04 Samples

Insulating Glass

Glazing TapeSealant

Two 203 by 254 mm samples of each of the following: tinted glass, and insulating glass units.

SD-07 Certificates

Insulating Glass; G

Certificates stating that the glass meets the specified requirements. Labels or manufacturers marking affixed to the glass will be accepted in lieu of certificates.

Glazing Accessories; G

Certificates from the manufacturer attesting that the units meet the luminous and solar radiant transmission requirements for heat absorbing glass.

SD-08 Manufacturer's Instructions

Setting and sealing materials

Glass setting

Submit glass manufacturer's recommendations for setting and sealing materials and for installation of each type of glazing material specified. Include cleaning instructions for plastic sheets.

SD-11 Closeout Submittals

1.3 SYSTEM DESCRIPTION

Glazing systems shall be fabricated and installed watertight and airtight to withstand thermal movement and wind loading without glass breakage, gasket failure, deterioration of glazing accessories, and defects in the work. Glazed panels shall comply with the safety standards, as indicated in accordance with ANSI Z97.1. Glazed panels shall comply with indicated wind/snow loading in accordance with ASTM E1300.

1.4 DELIVERY, STORAGE, AND HANDLING

Deliver products to the site in unopened containers, labeled plainly with manufacturers' names and brands. Store glass and setting materials in safe, enclosed dry locations and do not unpack until needed for installation. Handle and install materials in a manner that will protect them from damage.

1.5 ENVIRONMENTAL REQUIREMENTS

Do not start glazing work until the outdoor temperature is above 4 degrees C and rising, unless procedures recommended by the glass manufacturer and approved by the Contracting Officer are made to warm the glass and rabbet surfaces. Provide ventilation to prevent condensation of moisture on glazing work during installation. Do not perform glazing work during damp or rainy weather.

1.6 SUSTAINABLE DESIGN REQUIREMENTS

1.6.1 Environmental Data

1.7 WARRANTY

1.7.1 Warranty for Insulating Glass Units

Warranty insulating glass units against development of material obstruction to vision (such as dust, fogging, or film formation on the inner glass surfaces) caused by failure of the hermetic seal, other than through glass breakage, for a 10-year period following acceptance of the work. Provide new units for any units failing to comply with terms of this warranty within 45 working days after receipt of notice from the Government. For control tower units, the warranty period shall be 10 years; warranty shall be signed by the manufacturer.

PART 2 PRODUCTS

2.1 GLASS

2.1.1 Clear Glass

Type I, Class 1 (clear), Quality q4 (A). Provide for glazing openings not indicated or specified otherwise. Use double-strength sheet glass or 3 mm float glass for openings up to and including 1.39 square meters, 4.5 mm for glazing openings over 1.39 square meters but not over 2.79 square meters, and 6 mm for glazing openings over 2.79 square meters but not over 4.18 square meters.

2.1.2 Laminated Glass

ASTM C1172, Kind LA fabricated from two nominal 3 mm pieces of Type I, Class 1, Quality q3, flat annealed transparent glass conforming to ASTM C1036. Flat glass shall be laminated together with a minimum of 0.75 mm thick, clear polyvinyl butyral interlayer. The total thickness shall be nominally 6 mm. Color shall be gray. The total thickness shall be nominally 25 mm. Glazing and frames shall be designed and tested in accordance with ASTM F2248and ASTM E1300 by the manufacaturer.

2.1.3 Tempered Glass

ASTM C1048, Kind FT (fully tempered), Condition A (uncoated), Type I, Class 1 (transparent) or 2 (tinted heat absorbing), Quality q3, 6 mm thick, Color shall be clear or gray. Provide wherever safety glazing material is indicated or specified.

2.1.4 Tinted (Light-Reducing) Glass

Tinted (light-reducing) glass shall be Type I transparent flat type, Class 3-tinted, Quality q3 - glazing select, 40 percent light transmittance, 25 percent shading coefficient, conforming to ASTM C1036. Color shall be gray, ultra violet transmittance of 3 percent.

2.2 INSULATING GLASS UNITS

2.2.1 Buildings

Two panes of glass separated by a dehydrated airspace, filled with argon gas and hermetically sealed.

Insulated glass units shall have a Solar Heat Gain Coefficient (SHGC) maximum of .21 and a U-factor maximum of .28. Provide low emissivity coating on inside surface of exterior pane (No. 2 Surface). Color shall be gray.

Glazing shall meet or exceed a luminous efficacy of 1.0. Glazed panels shall be rated for not less than 26 Sound Transmission Class (STC) when tested for laboratory sound transmission loss according to ASTM E90 and determined by
ASTM E413.

Dimensional tolerances shall be as specified in IGMA TR-1200. Spacer shall be black, roll-formed,
steel-reinforced butyl rubber, with bent or tightly welded or keyed and sealed joints to completely seal the spacer periphery and eliminate moisture and hydrocarbon vapor transmission into airspace through the corners. Primary seal shall be compressed polyisobutylene and the secondary seal shall be a specially formulated silicone.

The inner light shall be ASTM C1172, clear annealed flat laminated glass Type I, Class I, Quality q3 . The outer light shall be ASTM C1036, Type I, Class 2 (tinted heat absorbing), Quality q4, 1/4 thick.
Both lights shall be fully tempered where indicated on the drawings or required by building codes.

2.3 SETTING AND SEALING MATERIALS

Provide as specified in the GANA Glazing Manual, IGMA TM-3000, IGMA TB-3001, and manufacturer's recommendations, unless specified otherwise herein. Do not use metal sash putty, nonskinning compounds, nonresilient preformed sealers, or impregnated preformed gaskets. Materials exposed to view and unpainted shall be gray or neutral color. Use structural silicone sealant at windows and doors required to meet antiterrorism standards (exterior of operations building) in accordance with ASTM F2248

2.3.1 Sealants

Provide elastomeric and structural sealants.

2.3.1.1 Elastomeric Sealant

ASTM C920, Type S, Grade NS, Class 12.5, Use G. Use for channel or stop glazing metal sash. Sealant shall be chemically compatible with setting blocks, edge blocks, and sealing tapes, with sealants used in manufacture of insulating glass units. Color of sealant shall match adjacent materials.

2.3.1.2 Structural Sealant

ASTM C1184, Type S.

2.3.2 Joint Backer

Joint backer shall have a diameter size at least 25 percent larger than joint width; type and material as recommended in writing by glass and sealant manufacturer.

2.3.3 Preformed Channels

Neoprene, vinyl, or rubber, as recommended by the glass manufacturer for the particular condition.

2.3.4 Sealing Tapes

Preformed, semisolid, PVC-based material of proper size and compressibility for the particular condition, complying with ASTM D2287. Use only where glazing rabbet is designed for tape and tape is recommended by the glass or sealant manufacturer. Provide spacer shims for use with compressible tapes. Tapes shall be chemically compatible with the product being set.

2.3.5 Setting Blocks and Edge Blocks

Closed-cell neoprene setting blocks shall be dense extruded type conforming to ASTM C509 and ASTM D395, Method B, Shore A durometer between 70 and 90. Edge blocking shall be Shore A durometer of 50 (plus or minus 5). Silicone setting blocks shall be required when blocks are in contact with silicone sealant. Profiles, lengths and locations shall be as required and recommended in writing by glass manufacturer. Block color shall be black.

2.3.6 Glazing Gaskets

Glazing gaskets shall be extruded with continuous integral locking projection designed to engage into metal glass holding members to provide a watertight seal during dynamic loading, building movements and thermal movements. Glazing gaskets for a single glazed opening shall be continuous one-piece units with factory-fabricated injection-molded corners free of flashing and burrs. Glazing gaskets shall be in lengths or units recommended by manufacturer to ensure against pull-back at corners. Glazing gasket profiles shall be as recommended by the manufacturer for the intended application.

2.3.6.1 Fixed Glazing Gaskets

Fixed glazing gaskets shall be closed-cell (sponge) smooth extruded compression gaskets of cured elastomeric virgin neoprene compounds conforming to ASTM C509, Type 2, Option 1.

2.3.6.2 Wedge Glazing Gaskets

Wedge glazing gaskets shall be high-quality extrusions of cured elastomeric virgin neoprene compounds, ozone resistant, conforming to ASTM C864, Option 1, Shore A durometer between 65 and 75.

2.3.6.3 Aluminum Framing Glazing Gaskets

Glazing gaskets for aluminum framing shall be permanent, elastic, non-shrinking, non-migrating, watertight and weathertight.

2.3.7 Accessories

Provide as required for a complete installation, including glazing points, clips, shims, angles, beads, and spacer strips. Provide noncorroding metal accessories. Provide primer-sealers and cleaners as recommended by the glass and sealant manufacturers.

PART 3 EXECUTION

3.1 PREPARATION

Preparation, unless otherwise specified or approved, shall conform to applicable recommendations in the GANA Glazing Manual, GANA Sealant Manual, IGMA TB-3001, IGMA TM-3000, and manufacturer's recommendations. Determine the sizes to provide the required edge clearances by measuring the actual opening to receive the glass. Grind smooth in the shop glass edges that will be exposed in finish work. Leave labels in place until the installation is approved, except remove applied labels on heat-absorbing glass and on insulating glass units as soon as glass is installed. Securely fix movable items or keep in a closed and locked position until glazing compound has thoroughly set.

3.2 GLASS SETTING

Shop glaze or field glaze items to be glazed using glass of the quality and thickness specified or indicated. Glazing, unless otherwise specified or approved, shall conform to applicable recommendations in the GANA Glazing Manual, GANA Sealant Manual, IGMA TB-3001, IGMA TM-3000, and manufacturer's recommendations. Aluminum windows, wood doors, and wood windows may be glazed in conformance with one of the glazing methods described in the standards under which they are produced, except that face puttying with no bedding will not be permitted. Handle and install glazing materials in accordance with manufacturer's instructions. Use beads or stops which are furnished with items to be glazed to secure the glass in place. Verify products are properly installed, connected, and adjusted.

3.2.1 Sheet Glass

Cut and set with the visible lines or waves horizontal.

3.2.2 Insulating Glass Units

Do not grind, nip, or cut edges or corners of units after the units have left the factory. Springing, forcing, or twisting of units during setting will not be permitted. Handle units so as not to strike frames or other objects. Installation shall conform to applicable recommendations of IGMA TB-3001 and IGMA TM-3000.

3.2.3 Installation of Heat-Absorbing Glass

Glass shall have clean-cut, factory-fabricated edges. Field cutting will not be permitted.

3.2.4 Installation of Laminated Glass

Sashes which are to receive laminated glass shall be weeped to the outside to allow water drainage into the channel. Install in accordance with ASTM F2248.

3.3 CLEANING

Clean glass surfaces and remove labels, paint spots, putty, and other defacement as required to prevent staining. Glass shall be clean at the time the work is accepted.

3.4 PROTECTION

Glass work shall be protected immediately after installation. Glazed openings shall be identified with suitable warning tapes, cloth or paper flags, attached with non-staining adhesives. Reflective glass shall be protected with a protective material to eliminate any contamination of the reflective coating. Protective material shall be placed far enough away from the coated glass to allow air to circulate to reduce heat buildup and moisture accumulation on the glass. Upon removal, separate protective materials for reuse or recycling. Glass units which are broken, chipped, cracked, abraded, or otherwise damaged during construction activities shall be removed and replaced with new units.

3.5 WASTE MANAGEMENT

Disposal and recycling of waste materials, including corrugated cardboard recycling, shall be in accordance with the Waste Management Plan. Upon removal, separate protective materials and reuse or recycle. Close and seal tightly all partly used sealant containers and store protected in well-ventilated, fire-safe area at moderate temperature.

3.6 SCHEDULE

Some metric measurements in this section are based on mathematical conversion of inch-pound measurements, and not on metric measurement commonly agreed to by the manufacturers or other parties. The inch-pound and metric measurements are as follows:

PRODUCTS	INCH-POUND	METRIC
Glass	1/8 inch	3 mm
	3/16 inch	4.5 mm
	7/32 inch	6 mm
	1/4 inch	6 mm
	3/8 inch	10 mm
Interlayer	0.015 inch	0.38 mm
Glazing Channels	1/4 inch	6 mm

-- End of Section --

SECTION 08 91 00

METAL WALL LOUVERS
05/11

PART 1 GENERAL

1.1 REFERENCES

The publications listed below form a part of this specification to the extent referenced. The publications are referred to within the text by the basic designation only.

AIR MOVEMENT AND CONTROL ASSOCIATION INTERNATIONAL (AMCA)

AMCA 500-D	(2012) Laboratory Methods of Testing Dampers for Rating
AMCA 511	(2013) Certified Ratings Program for Air Control Devices

ASTM INTERNATIONAL (ASTM)

ASTM A653/A653M	(2013) Standard Specification for Steel Sheet, Zinc-Coated (Galvanized) or Zinc-Iron Alloy-Coated (Galvannealed) by the Hot-Dip Process

1.2 SUBMITTALS

Government approval is required for submittals with a "G" designation; submittals not having a "G" designation are for Contractor Quality Control approval. Submittals with an "S" are for inclusion in the Sustainability Notebook, in conformance to Section 01 33 29SUSTAINABILITY REQUIREMENTS. Submit the following in accordance with Section 01 33 00 SUBMITTAL PROCEDURES:

SD-02 Shop Drawings

Wall louvers; G

SD-03 Product Data

Metal Wall Louvers; G

1.3 DELIVERY, STORAGE, AND PROTECTION

Deliver materials to the site in an undamaged condition. Carefully store materials off the ground to provide proper ventilation, drainage, and protection against dampness. Louvers shall be free from nicks, scratches, and blemishes. Replace defective or damaged materials with new.

1.4 DETAIL DRAWINGS

Show all information necessary for fabrication and installation of wall louvers. Indicate materials, sizes, thicknesses, fastenings, and profiles.

1.5 COLOR SAMPLES

Colors of finishes for wall louvers shall closely approximate colors indicated. Where color is not indicated, submit the manufacturer's standard colors to the Contracting Officer for selection.

PART 2 PRODUCTS

2.1 MATERIALS

2.1.1 Galvanized Steel Sheet

ASTM A653/A653M, coating designation Z275.

2.2 METAL WALL LOUVERS

Weather resistant type, with bird screens and made to withstand a wind load of not less than 1.44 kilopascals. Wall louvers shall bear the AMCA certified ratings program seal for air performance and water penetration in accordance with AMCA 500-D and AMCA 511. The rating shall show a water penetration of 0.06 kilograms or less per square meter of free area at a free velocity of 244 meters per minute.

2.2.1 Formed Metal Louvers

Formed of zinc-coated steel sheet not thinner than 16 U.S. gage, or aluminum sheet not less than 2 mm thick.

2.2.2 Mullions and Mullion Covers

Same material and finish as louvers. Provide mullions for all louvers more than 1500 mm in width at not more than 1500 mm on centers. Provide mullions covers on both faces of joints between louvers.

2.2.3 Screens and Frames

For aluminum louvers, provide 12.5 mm square mesh, 1.8 or 1.5 mm aluminum or 6 mm square mesh, 1.5 mm aluminum bird screening. For steel louvers, provide 12.5 mm square mesh, 2.5 or 1.5 mm zinc-coated steel; 12.5 mm square mesh, 1.5 mm copper; or 6 mm square mesh, 1.5 mm thick zinc-coated steel or copper bird screening. Mount screens in removable, rewirable frames of same material and finish as the louvers.

2.3 FASTENERS AND ACCESSORIES

Provide stainless steel screws and fasteners for aluminum louvers and zinc-coated or stainless steel screws and fasteners for steel louvers. Provide other accessories as required for complete and proper installation.

2.4 FINISHES

2.4.1 Steel

Provide factory-applied coating. Clean and phosphate treat exposed surfaces and apply rust-inhibitive primer and baked enamel finish coat, 0.025 mm minimum total dry film thickness, color as indicated.

PART 3 EXECUTION

3.1 INSTALLATION

3.1.1 Wall Louvers

Install using stops or moldings, flanges, strap anchors, or jamb fasteners as appropriate for the wall construction and in accordance with manufacturer's recommendations.

3.1.2 Screens and Frames

Attach frames to louvers with screws or bolts.

3.2 PROTECTION FROM CONTACT OF DISSIMILAR MATERIALS

3.2.1 Copper or Copper-Bearing Alloys

Paint copper or copper-bearing alloys in contact with dissimilar metal with heavy-bodied bituminous paint or separate with inert membrane.

3.2.2 Aluminum

Where aluminum contacts metal other than zinc, paint the dissimilar metal with a primer and two coats of aluminum paint.

3.2.3 Metal

Paint metal in contact with mortar, concrete, or other masonry materials with alkali-resistant coatings such as heavy-bodied bituminous paint.

-- End of Section --

THIS PAGE HAS BEEN INTENTIONALLY LEFT BLANK

SECTION 09 22 00

SUPPORTS FOR PLASTER AND GYPSUM BOARD
02/10

PART 1 GENERAL

1.1 REFERENCES

The publications listed below form a part of this specification to the extent referenced. The publications are referred to within the text by the basic designation only.

ASTM INTERNATIONAL (ASTM)

ASTM A463/A463M	(2010) Standard Specification for Steel Sheet, Aluminum-Coated, by the Hot-Dip Process
ASTM A653/A653M	(2013) Standard Specification for Steel Sheet, Zinc-Coated (Galvanized) or Zinc-Iron Alloy-Coated (Galvannealed) by the Hot-Dip Process
ASTM C645	(2013) Nonstructural Steel Framing Members
ASTM C754	(2011) Installation of Steel Framing Members to Receive Screw-Attached Gypsum Panel Products

UNDERWRITERS LABORATORIES (UL)

UL Fire Resistance	(2012) Fire Resistance Directory

1.2 SUBMITTALS

Government approval is required for submittals with a "G" designation; submittals not having a "G" designation are for Contractor Quality Control approval. Submittals with an "S" are for inclusion in the Sustainability Notebook, in conformance to Section 01 33 29SUSTAINABILITY REQUIREMENTS. Submit the following in accordance with Section 01 33 00 SUBMITTAL PROCEDURES:

SD-02 Shop Drawings

Metal support systems; G

Submit for the erection of metal framing, furring, and ceiling suspension systems. Indicate materials, sizes, thicknesses, and fastenings.

1.3 DELIVERY, STORAGE, AND HANDLING

Deliver materials to the job site and store in ventilated dry locations. Storage area shall permit easy access for inspection and handling. If materials are stored outdoors, stack materials off the ground, supported on a level platform, and fully protected from the weather. Handle materials carefully to prevent damage. Remove damaged items and provide

new items.

PART 2 PRODUCTS

2.1 MATERIALS

Provide steel materials for metal support systems with galvanized coating ASTM A653/A653M, Z180; aluminum coating ASTM A463/A463M, T1-75; or a 55-percent aluminum-zinc coating. Provide support systems and attachments per UFC 3-310-04, "Seismic Design for Buildings" in seismic zones.

2.1.1 Materials for Attachment of Gypsum Wallboard

2.1.1.1 Suspended and Furred Ceiling Systems

ASTM C645.

2.1.1.2 Nonload-Bearing Wall Framing and Furring

ASTM C645, but not thinner than 0.45 mm thickness, with 0.85 mm minimum thickness supporting wall hung items such as cabinetwork, equipment and fixtures.

2.1.1.3 Furring Structural Steel Columns

ASTM C645. Steel (furring) clips and support angles listed in UL Fire Resistance may be provided in lieu of steel studs for erection of gypsum wallboard around structural steel columns.

2.1.1.4 Z-Furring Channels with Wall Insulation

Not lighter than 0.5 mm thick galvanized steel, Z-shaped, with 32 mm and 19 mm flanges and depth as required by the insulation thickness provided.

PART 3 EXECUTION

3.1 INSTALLATION

3.1.1 Systems for Attachment of Gypsum Wallboard

3.1.1.1 Suspended and Furred Ceiling Systems

ASTM C754, except provide framing members 400 mm o.c. unless indicated otherwise.

3.1.1.2 Non-loadbearing Wall Framing and Furring

ASTM C754, except as indicated otherwise.

3.1.1.3 Furring Structural Steel Columns

Install studs or galvanized steel clips and support angles for erection of gypsum wallboard around structural steel columns.

3.1.1.4 Z-Furring Channels with Wall Insulation

Install Z-furring channels vertically spaced not more than 600 mm o.c. Locate Z-furring channels at interior and exterior corners in accordance with manufacturer's printed erection instructions. Fasten furring

channels to concrete walls with powder-driven fasteners or hardened concrete steel nails through narrow flange of channel. Space fasteners not more than 600 mm o.c.

3.2 ERECTION TOLERANCES

Provide framing members which will be covered by finish materials such as wallboard, plaster, or ceramic tile set in a mortar setting bed, within the following limits:

a. Layout of walls and partitions: 6 mm from intended position;

b. Plates and runners: 5 mm in 1.9 meters from a straight line;

c. Studs: 5 mm in 1.9 meters out of plumb, not cumulative; and

d. Face of framing members: 5 mm in 1.9 meters from a true plane.

Provide framing members which will be covered by ceramic tile set in dry-set mortar, latex-portland cement mortar, or organic adhesive within the following limits:

a. Layout of walls and partitions: 6 mm from intended position;

b. Plates and runners: 5 mm in 3.8 meters from a straight line;

c. Studs: 5 mm in 3.8 meters out of plumb, not cumulative; and

d. Face of framing members: 5 mm in 3.8 meters from a true plane.

-- End of Section --

THIS PAGE HAS BEEN INTENTIONALLY LEFT BLANK

SECTION 09 24 23

STUCCO
05/09

PART 1 GENERAL

1.1 REFERENCES

The publications listed below form a part of this specification to the extent referenced. The publications are referred to within the text by the basic designation only.

ASTM INTERNATIONAL (ASTM)

ASTM A1064/A1064M	(2014) Standard Specification for Carbon-Steel Wire and Welded Wire Reinforcement, Plain and Deformed, for Concrete
ASTM C1032	(2014) Standard Specification for Woven Wire Plaster Base
ASTM C1063	(2014d) Standard Practice for Installation of Lathing and Furring to Receive Interior and Exterior Portland Cement-Based Plaster
ASTM C150/C150M	(2012) Standard Specification for Portland Cement
ASTM C206	(2014) Standard Specification for Finishing Hydrated Lime
ASTM C841	(2003; R 2013) Installation of Interior Lathing and Furring
ASTM C847	(2014a) Standard Specification for Metal Lath
ASTM C897	(2005; R 2014) Aggregate for Job-Mixed Portland Cement-Based Plasters
ASTM C926	(2015) Application of Portland Cement-Based Plaster
ASTM C933	(2014) Welded Wire Lath
ASTM D1784	(2011) Standard Specification for Rigid Poly(Vinyl Chloride) (PVC) Compounds and Chlorinated Poly(Vinyl Chloride) (CPVC) Compounds

U.S. GREEN BUILDING COUNCIL (USGBC)

LEED BD+C	(2009; R 2010) Leadership in Energy and Environmental Design(tm) Building Design and Construction (LEED-NC)

1.2 SUSTAINABILITY REPORTING

Materials in this technical specification may contribute towards contract compliance with sustainability requirements. See Section 01 33 29 SUSTAINABILITY REPORTING for project LEED BD+C recycled content and LEED documentationrequirements.

1.3 SUBMITTALS

Government approval is required for submittals with a "G" designation; submittals not having a "G" designation are for Contractor Quality Control approval. Submittals with an "S" are for inclusion in the Sustainability Notebook, in conformance to Section 01 33 29 SUSTAINABILITY REPORTING. Submit the following in accordance with Section 01 33 00 SUBMITTAL PROCEDURES:

SD-02 Shop Drawings

Lath; G

SD-03 Product Data

Proportions and Mixing; G

SD-04 Samples

Colored Stucco Finish Coat; G
Sample Panel; G

SD-11 Closeout Submittals

LEED Documentation; G

1.4 QUALITY ASSURANCE

Submit a SAMPLE PANEL as follows: One 300 mm square stucco panel showing finish texture and color and exposed reinforcement at the edges, one 300 mm square of reinforcement, and a 300 mm length of each accessory proposed, prior to proceeding with stucco work.

1.5 DELIVERY, STORAGE, AND HANDLING

Deliver packaged materials to the site in the original packages and containers with labels intact and seals unbroken. Keep cementitious materials dry and stored off the ground, under cover and away from damp surfaces until ready to be used. Aggregate shall be covered to prevent the absorption or loss of moisture.

1.6 ENVIRONMENTAL REQUIREMENTS

Do not apply stucco when the ambient temperature is 4 degrees C or lower, or when a drop in temperature below 4 degrees C is expected within 48 hours after application.

PART 2 PRODUCTS

2.1 PORTLAND CEMENT

Portland cement shall conform to ASTM C150/C150M, white portland cement, Type II.

2.2 COLORED STUCCO FINISH COAT

Colored stucco finish coat shall be a mill mixed product using white portland cement and requiring only the addition of and mixing with water for application. Color shall be as indicated on the drawings. Submit samples including both a fabricated portion of unit of work and color samples.

2.3 LIME

Lime shall conform to ASTM C206, Type S.

2.4 SAND

Sand aggregate for job-mixed base coat and job-mixed finish coat stucco shall conform to ASTM C897.

2.5 ACCESSORIES

Accessories shall be roll formed galvanized steel, or rigid polyvinyl chloride (PVC), except that cornerite and striplath shall be formed from steel sheets with manufacturer's standard galvanized coating. Vinyl members shall be in accordance with ASTM D1784. Welded wire corner reinforcements shall be zinc coated, galvanized 1.4 mm steel wire conforming to ASTM A1064/A1064M. Furring shall include hangers, bolts, inserts, clips, fastenings, and attachments of number, size, and design to develop the full strength of the members.

2.6 STEEL FRAMING

Steel framing shall be as shown and shall be manufacturers standard products with shop applied protective coating.

2.7 METAL LATH

Metal lath shall conform to ASTM C847, types and weights in accordance with the various spacing shown in ASTM C841. Lath for vertical application on steel and wood framing supports shall be expanded metal or welded or woven wire and shall have paper backing with a minimum vapor permeance of 287.2 ng per Pa per second per square meter. Woven wire lath shall be a maximum 38 x 38 mm mesh wire of not less than 1.37 mm nominal diameter and shall conform to ASTM C1032. Welded wire lath shall conform to ASTM C933, with openings not to exceed 50 x 50 mm. Expanded metal or wire lath shall be fabricated in a manner to provide not less than 6 mm keying between wire and paper backing and keying shall be obtained by a uniform series of slots in a perforated face paper woven between the wires.

2.8 WATER

Provide clean, fresh, potable water, free from amounts of oils, acids, alkalis and organic matter that would be injurious to the stucco.

PART 3 EXECUTION

3.1 FRAMING

Framing shall be installed as indicated.

3.2 CONTROL JOINTS

Control joints shall be located as indicated on the drawings. Prefabricated control joint members shall be installed prior to the application of the stucco. Control joints shall be cleared of all stucco within the control area after stucco application and prior to final stucco set.

3.3 LATH

Install lath in accordance with ASTM C841 or ASTM C1063 except as otherwise specified. Metal and wire lath shall be applied straight, without buckles and with joints staggered. End laps of metal lath shall be not less than 25 mm. When paper-backed lath is used, the paper shall be split from the lath at all lap areas to provide a paper to paper and lath to lath lap. Horizontal joints shall be shiplapped. Lath shall be interrupted at all control joints. Submit drawings showing details of construction for reinforcement, furring, and grounds; including manufacturer's installation instructions for stucco materials, and locations where each mix and coating thickness will be used.

3.3.1 Steel and Wood Supports

Apply metal lath over vertical open or solid wood and steel backing frame construction only after sheathing and air barrier has been applied to the area to receive the stucco. Fasten lath every 200 mm vertically and every 400 mm horizontally; and where sheets of lath are lapped. Drive fasteners to hold both lapped edges securely in place.

3.3.2 On Concrete and Masonry

Fasten lath every 200 mm vertically and every 400 mm horizontally. Where wood supports adjoin masonry or concrete in the same direction, provide casing bead, control joints, or reinforcement as indicated.

3.3.3 Over Metal Lintels and Flashings

Lath over metal lintels shall be extended vertically over the angles to a height of not less than 150 mm and horizontally across the underside of the lintels and shall be secured in an approved manner. Lath over metal flashings shall lap the flashings not less than 50 mm and shall be extended vertically for a height of not less than 150 mm.

3.3.4 Special Shapes, Profiles, and Contours

Special shapes, profiles, and contours shall be formed with wood, metal or aluminum furring and reinforcing.

3.4 FURRING

Furring shall be installed to true lines and surfaces and shall be rigidly supported and secured in place.

3.5 PREPARATION OF SURFACES

Preparation of surfaces for application of stucco to solid bases such as stone, masonry or concrete shall conform to the applicable requirements of ASTM C926.

3.6 PROPORTIONS AND MIXING

Proportions and mixing for job-mixed base coat and finish coat shall conform to the applicable requirements of ASTM C926. Mixing of mill-mixed finish coat shall be in accordance with the manufacturer's directions. Submit detailed description of the proposed job-mix proportions for base and finish coats; including identification of thickness of coats.

3.7 STUCCO APPLICATION

Stucco shall be applied in three coats to a thickness of not less than 25 mm as measured from the back plane of metal reinforcement, exclusive of ribs or dimples or from the face of solid backing or support, with or without metal reinforcement, to the finished stucco surface, including moderate texture variations. Stucco application shall conform to the applicable requirements of ASTM C926 and the following:

3.7.1 Workmanship

Items or features of the work in connection with or adjoining the stucco shall be in place, plumb, straight, and true prior to beginning the stucco work. Metal and wire lath, where required, shall be in place and positioned to provide a good key at back of lath. Where lath is applied over copper, the copper shall be given a heavy coat of bituminous paint. Masonry surfaces to receive stucco shall be evenly dampened immediately prior to application of stucco. Each stucco coat shall be applied continuously in one general direction, without allowing mortar to dry at edges. Where it is impossible to work the full dimension of a wall surface in a continuous operation, jointing shall be made at a break, opening, or other natural division of the surface. Edges to be joined shall be dampened slightly to produce a smooth confluence. Exterior corners of stucco shall be slightly rounded. Stucco on soffit surfaces shall be pitched forward to form a drip.

3.7.2 Scratch Coat

Apply scratch coat not less than 10 mm thick under sufficient pressure to form good keys and to completely embed the reinforcement. Before the scratch coat has set, it shall be lightly scratched in one direction and vertical surfaces shall be scratched in the horizontal direction only. The scratch coat shall be fog cured for a minimum of 72 hours.

3.7.3 Brown Coat

Evenly dampen the scratch coat to obtain uniform suction before the brown coat is applied. There shall be no visible water on the surface when the brown coat is applied. The brown coat shall be applied to the scratch coat with sufficient pressure to force the stucco into the scratches and shall be brought to a plumb, true, even plane with rod or straightedge. When set sufficiently, the brown coat shall be uniformly floated with a dry float to promote densification of the coat and to provide a surface receptive to bonding of the finish coat. Brown coat shall be fog cured for a minimum of 72 hours.

3.7.4 Finish Coat

Dampen surfaces of the brown coat not more than 1 hour before the finish coat is to be applied to a uniform wetness with no free-standing water on the surface. The finish coat shall have a float finish and shall conform to the approved sample. Fog cure the finish coat for a minimum of 48 hours. Take care to prevent staining.

3.7.5 Surface Tolerance

When a 3 m straightedge is placed at any location on the finished surface of the stucco, excluding rough-textured finish, the surface shall not vary more than 3 mm from the straightedge.

3.8 CURING AND PROTECTION

Perform fog curing by applying a fine mist of water to the stucco. Exercise care during fog curing to avoid erosion damage of the stucco surfaces. Do not use a solid stream of water. Fognot less than three times daily. Protect the stucco from the direct rays of the sun during severe drying conditions using canvas, cloth or other approved sheet material.

3.9 PATCHING AND POINTING

Replace or patch loose, cracked, damaged or defective work as directed. Patching shall match existing work in texture and color and shall be finished flush.

-- End of Section --

SECTION 09 29 00

GYPSUM BOARD
05/11

PART 1 GENERAL

1.1 REFERENCES

The publications listed below form a part of this specification to the extent referenced. The publications are referred to within the text by the basic designation only.

AMERICAN NATIONAL STANDARDS INSTITUTE (ANSI)

ANSI A108.11	(1992; Reaffirmed 2005) Specifications for Interior Installation of Cementitious Backer Units

ASTM INTERNATIONAL (ASTM)

ASTM C1002	(2007; R 2013) Standard Specification for Steel Self-Piercing Tapping Screws for the Application of Gypsum Panel Products or Metal Plaster Bases to Wood Studs or Steel Studs
ASTM C1047	(2014a) Standard Specification for Accessories for Gypsum Wallboard and Gypsum Veneer Base
ASTM C1396/C1396M	(2014) Standard Specification for Gypsum Board
ASTM C475/C475M	(2012) Joint Compound and Joint Tape for Finishing Gypsum Board
ASTM C840	(2013) Application and Finishing of Gypsum Board
ASTM C954	(2011) Steel Drill Screws for the Application of Gypsum Panel Products or Metal Plaster Bases to Steel Studs from 0.033 in. (0.84 mm) to 0.112 in. (2.84 mm) in Thickness

GYPSUM ASSOCIATION (GA)

GA 214	(2010) Recommended Levels of Gypsum Board Finish
GA 216	(2010) Application and Finishing of Gypsum Panel Products

SCIENTIFIC CERTIFICATION SYSTEMS (SCS)

SCS	Scientific Certification Systems (SCS)Indoor Advantage

U.S. GREEN BUILDING COUNCIL (USGBC)

LEED NC	(2009) Leadership in Energy and Environmental Design(tm) New Construction Rating System

UL ENVIRONMENT (ULE)

ULE Greenguard	UL Greenguard Certification Program

UNDERWRITERS LABORATORIES (UL)

UL Fire Resistance	(2012) Fire Resistance Directory

1.2 SUBMITTALS

Government approval is required for submittals with a "G" designation; submittals not having a "G" designation are for Contractor Quality Control approval. Submittals with an "S" are for inclusion in the Sustainability Notebook, in conformance to Section 01 33 29SUSTAINABILITY REQUIREMENTS. Submit the following in accordance with Section 01 33 00 SUBMITTAL PROCEDURES:

SD-03 Product Data

Cementitious backer units; G

Accessories

Submit for each type of gypsum board and for cementitious backer units.

Certification

Gypsum Board; (LEED NC); G

Submit documentation indicating percentage of post-industrial and post-consumer recycled content per unit of product. Indicate relative dollar value of recycled content products to total dollar value of products included in project.

Adhesives; (LEED NC); G
Joint Treatment Materials; G

Submit manufacturer's product data, indicating VOC content.

SD-07 Certificates

Asbestos Free Materials; G

Certify that gypsum board types, gypsum backing board types, cementitious backer units, and joint treating materials do not contain asbestos.

SD-08 Manufacturer's Instructions

Material Safety Data Sheets

SD-10 Operation and Maintenance Data

Manufacturer maintenance instructions

Waste Management

SD-11 Closeout Submittals

Gypsum Board; (LEED)

LEED documentation relative to recycled content credit in accordance with LEED Reference Guide. Include in LEED Documentation Notebook.

Adhesives; (LEED)

LEED documentation relative to low emitting materials credit in accordance with LEED Reference Guide. Include in LEED Documentation Notebook.

1.3 SUSTAINABLE DESIGN CERTIFICATION

Product shall be third party certified in accordance with ULE Greenguard Gold, SCS Scientific Certification Systems Indoor Advantage Gold or equal. Certification shall be performed annually and shall be current.

1.4 DELIVERY, STORAGE, AND HANDLING

1.4.1 Delivery

Deliver materials in the original packages, containers, or bundles with each bearing the brand name, applicable standard designation, and name of manufacturer, or supplier.

1.4.2 Storage

Keep materials dry by storing inside a sheltered building. Where necessary to store gypsum board and cementitious backer units outside, store off the ground, properly supported on a level platform, and protected from direct exposure to rain, snow, sunlight, and other extreme weather conditions. Provide adequate ventilation to prevent condensation. Store per manufacturer's recommendations for allowable temperature and humidity range. Gypsum wallboard shall not be stored with materials which have high emissions of volatile organic compounds (VOCs) or other contaminants. Do not store panels near materials that may offgas or emit harmful fumes, such as kerosene heaters, fresh paint, or adhesives.

1.4.3 Handling

Neatly stack gypsum board and cementitious backer units flat to prevent sagging or damage to the edges, ends, and surfaces.

1.5 ENVIRONMENTAL CONDITIONS

1.5.1 Temperature

Maintain a uniform temperature of not less than 10 degrees C in the structure for at least 48 hours prior to, during, and following the application of gypsum board, cementitious backer units, and joint treatment materials, or the bonding of adhesives.

1.5.2 Exposure to Weather

Protect gypsum board and cementitious backer unit products from direct exposure to rain, snow, sunlight, and other extreme weather conditions.

1.5.3 Temporary Ventilation

Provide temporary ventilation for work of this section.

1.6 SUSTAINABLE DESIGN REQUIREMENTS

1.7 QUALIFICATIONS

Furnish type of gypsum board work specialized by the installer with a minimum of 3 years of documented successful experience.

1.8 SCHEDULING

The gypsum wallboard shall be taped, spackled and primed before the installation of the highly-emitting materials.

PART 2 PRODUCTS

2.1 MATERIALS

Conform to specifications, standards and requirements specified. Provide gypsum board types, gypsum backing board types, cementitious backing units, and joint treating materials manufactured from asbestos free materials only. Submit Material Safety Data Sheets and manufacturer maintenance instructions for gypsum materials including adhesives.

2.1.1 Gypsum Board

ASTM C1396/C1396M. See Section 01 33 29 LEED(tm) DOCUMENTATION for cumulative total recycled content requirements. Gypsum board may contain post-consumer or post-industrial recycled content.

2.1.1.1 Regular

1200 mm wide, 15.9 mm thick, tapered edges.

2.1.1.2 Type X (Special Fire-Resistant)

1200 mm wide, 15.9 mm thick, tapered edges.

2.1.2 Cementitious Backer Units

In accordance with the Tile Council of America (TCA) Handbook.

2.1.3 Joint Treatment Materials

ASTM C475/C475M. Use all purpose joint and texturing compound containing inert fillers and natural binders, including lime compound. Pre-mixed compounds shall be free of antifreeze, vinyl adhesives, preservatives, biocides and other slow releasing compounds.

2.1.3.1 Embedding Compound

Specifically formulated and manufactured for use in embedding tape at gypsum board joints and compatible with tape, substrate and fasteners.

2.1.3.2 Finishing or Topping Compound

Specifically formulated and manufactured for use as a finishing compound.

2.1.3.3 All-Purpose Compound

Specifically formulated and manufactured to serve as both a taping and a finishing compound and compatible with tape, substrate and fasteners.

2.1.3.4 Setting or Hardening Type Compound

Specifically formulated and manufactured for use with fiber glass mesh tape.

2.1.3.5 Joint Tape

Use cross-laminated, tapered edge, reinforced paper, or fiber glass mesh tape recommended by the manufacturer.

2.1.4 Fasteners

2.1.4.1 Screws

ASTM C1002, Type "G", Type "S" or Type "W" steel drill screws for fastening gypsum board to gypsum board, wood framing members and steel framing members less than 0.84 mm thick. ASTM C954 steel drill screws for fastening gypsum board to steel framing members 0.84 to 2.84 mm thick. Provide cementitious backer unit screws with a polymer coating.

2.1.5 Adhesives

Do not use adhesive containing benzene, carbon tetrachloride, or trichloroethylene. Adhesive must meet the requirements of LEED low emitting materials credit.

2.1.5.1 Adhesive for Fastening Gypsum Board to Metal Framing

Not permitted.

2.1.5.2 Adhesive for Laminating

Adhesive attachment is not permitted for multi-layer gypsum boards. For laminating gypsum studs to face panels, provide adhesive recommended by gypsum board manufacturer.

2.1.6 Accessories

ASTM C1047. Fabricate from corrosion protected steel or plastic designed for intended use. Accessories manufactured with paper flanges are not acceptable. Flanges shall be free of dirt, grease, and other materials that may adversely affect bond of joint treatment. Provide prefinished or job decorated materials.

2.1.7 Water

Provide clean, fresh, and potable water.

PART 3 EXECUTION

3.1 EXAMINATION

3.1.1 Framing and Furring

Verify that framing and furring are securely attached and of sizes and spacing to provide a suitable substrate to receive gypsum board and cementitious backer units. Verify that all blocking, headers and supports are in place to support plumbing fixtures and to receive soap dishes, grab bars, towel racks, and similar items. Do not proceed with work until framing and furring are acceptable for application of gypsum board and cementitious backer units.

3.1.2 Gypsum Board

Verify that surfaces of gypsum board to be bonded with an adhesive are free of dust, dirt, grease, and any other foreign matter. Do not proceed with work until surfaces are acceptable for application of gypsum board with adhesive.

3.1.3 Concrete Walls

Verify that surfaces of concrete walls to receive gypsum board applied with adhesive are dry, free of dust, oil, form release agents, protrusions and voids, and any other foreign matter. Do not proceed with work until surfaces are acceptable for application of gypsum board with adhesive.

3.2 APPLICATION OF GYPSUM BOARD

Apply gypsum board to framing and furring members in accordance with ASTM C840 or GA 216 and the requirements specified. Apply gypsum board with separate panels in moderate contact; do not force in place. Stagger end joints of adjoining panels. Neatly fit abutting end and edge joints. Use gypsum board of maximum practical length; select panel sizes to minimize waste. Cut out gypsum board to make neat, close, and tight joints around openings. In vertical application of gypsum board, provide panels in lengths required to reach full height of vertical surfaces in one continuous piece. Lay out panels to minimize waste; reuse cutoffs whenever feasible. Surfaces of gypsum board and substrate members may not be bonded together with an adhesive. Treat edges of cutouts for plumbing pipes, screwheads, and joints with water-resistant compound as recommended by the gypsum board manufacturer. Minimize framing by floating corners with single studs and drywall clips. Install 16 mm gypsum or 13 mm ceiling board over framing at 610 mm on center. Provide type of gypsum board for use in each system specified herein as indicated.

3.2.1 Adhesive Application to Interior Masonry or Concrete Walls

Apply in accordance with ASTM C840, System VI or GA 216.

3.2.2 Application of Gypsum Board to Steel Framing and Furring

Apply in accordance with ASTM C840, System VIII or GA 216.

3.2.3 Arches and Bending Radii

Apply gypsum board in accordance with ASTM C840, System IX or GA 216.

3.2.4 Control Joints

Install expansion and contraction joints in ceilings and walls in accordance with ASTM C840, System XIII or GA 216. Fill control joints between studs in fire-rated construction with firesafing insulation to match the fire-rating of construction.

3.3 APPLICATION OF CEMENTITIOUS BACKER UNITS

3.3.1 Application

In wet areas (tubs, shower enclosures, saunas, steam rooms, gang shower rooms), apply cementitious backer units in accordance with ANSI A108.11. Place a 7.6 kg asphalt impregnated, continuous felt paper membrane behind cementitious backer units, between backer units and studs or base layer of gypsum board. Place membrane with a minimum 150 mm overlap of sheets laid shingle style.

3.3.2 Joint Treatment

ANSI A108.11.

3.4 FINISHING OF GYPSUM BOARD

Tape and finish gypsum board in accordance with ASTM C840, GA 214 and GA 216. Finish plenum areas above ceilings to Level 1 in accordance with GA 214. Finish water resistant gypsum backing board, ASTM C1396/C1396M, to receive ceramic tile to Level 2 in accordance with GA 214. Finish walls and ceilings to receive a heavy-grade wall covering or heave textured finish before painting to Level 3 in accordance with GA 214. Finish walls and ceilings without critical lighting to receive flat paints, light textures, or wall coverings to Level 4 in accordance with GA 214. Provide joint, fastener depression, and corner treatment. Tool joints as smoothly as possible to minimize sanding and dust. Do not use fiber glass mesh tape with conventional drying type joint compounds; use setting or hardening type compounds only. Provide treatment for water-resistant gypsum board as recommended by the gypsum board manufacturer. Protect workers, building occupants, and HVAC systems from gypsum dust.

3.5 FIRE-RESISTANT ASSEMBLIES

Wherever fire-rated construction is indicated, provide materials and application methods, including types and spacing of fasteners, wall and ceiling framing in accordance with the specifications contained in UL Fire Resistance for the Design Number(s) indicated. Joints of fire-rated gypsum board enclosures shall be closed and sealed in

accordance with UL test requirements or GA requirements. Seal penetrations through rated partitions and ceilings tight in accordance with tested systems.

3.6 PATCHING

Patch surface defects in gypsum board to a smooth, uniform appearance, ready to receive finishes.

3.7 WASTE MANAGEMENT

As specified in Waste Management Plan and as follows. Separate clean waste gypsum products from contaminants. Do not include wood, plastic, metal, asphalt-impregnated gypsum board, or any gypsum board coated with glass fiber, vinyl, decorative paper, or other finish. Place in designated area and protect from moisture and contamination.

Identify manufacturer's policy for collection or return of remaining construction scrap, unused material, and packaging material. Institute demolition and construction recycling to take advantage of manufacturer's programs. When such a service is not available, seek local recyclers to reclaim the materials.

-- End of Section --

SECTION 09 30 13

CERAMIC TILING
11/13

PART 1 GENERAL

1.1 REFERENCES

The publications listed below form a part of this specification to the extent referenced. The publications are referred to within the text by the basic designation only.

AMERICAN NATIONAL STANDARDS INSTITUTE (ANSI)

ANSI A137.1	(2012) American National Standards Specifications for Ceramic Tile

ASTM INTERNATIONAL (ASTM)

ASTM C1027	(2009) Standard Test Method for Determining Visible Abrasion Resistance of Glazed Ceramic Tile
ASTM C144	(2011) Standard Specification for Aggregate for Masonry Mortar
ASTM C150/C150M	(2012) Standard Specification for Portland Cement
ASTM C206	(2003; R 2009) Standard Specification for Finishing Hydrated Lime
ASTM C207	(2006; R 2011) Standard Specification for Hydrated Lime for Masonry Purposes
ASTM C33/C33M	(2013) Standard Specification for Concrete Aggregates
ASTM C373	(2014) Water Absorption, Bulk Density, Apparent Porosity, and Apparent Specific Gravity of Fired Whiteware Products
ASTM C648	(2004; R 2009) Breaking Strength of Ceramic Tile
ASTM E2129	(2010) Standard Practice for Data Collection for Sustainability Assessment of Building Products

BAY AREA AIR QUALITY MANAGEMENT DISTRICT (Bay Area AQMD)

Bay Area AQMD Rule 8-51	(1992; R 2001) Adhesive and Sealant Products

GREEN SEAL (GS)

GS-36	(2011) Commercial Adhesives

SOUTH COAST AIR QUALITY MANAGEMENT DISTRICT (SCAQMD)

SCAQMD Rule 1168	(1989; R 2005) Adhesive and Sealant Applications

TILE COUNCIL OF NORTH AMERICA (TCNA)

TCNA Hdbk	(2013) Handbook for Ceramic, Glass, and Stone Tile Installation

U.S. GREEN BUILDING COUNCIL (USGBC)

LEED BD+C	(2009; R 2010) Leadership in Energy and Environmental Design(tm) Building Design and Construction (LEED-NC)
LEED GBDC Ref Guide	(2009; R 2010) LEED Reference Guide for Green Building Design, Construction and Major Renovations of Commercial and Institutional Buildings including Core & Shell and K-12 Projects

1.2 SUSTAINABILITY REPORTING

Materials in this technical specification may contribute towards contract compliance with sustainability requirements. See Section 01 33 29 SUSTAINABILITY REPORTING for project LEED BD+C low-emitting materials, recycled content, and LEED documentation requirements.

1.3 SUBMITTALS

Government approval is required for submittals with a "G" designation; submittals not having a "G" designation are for Contractor Quality Control approval. Submittals with an "S" are for inclusion in the Sustainability Notebook, in conformance to Section 01 33 29 SUSTAINABILITY REPORTING. Submit the following in accordance with Section 01 33 00 SUBMITTAL PROCEDURES:

SD-02 Shop Drawings

Detail Drawings; G

SD-03 Product Data
Environmental Data
Tile; G
Setting-Bed; G
Mortar, Grout, and Adhesive; (LEED); G
Tile; (LEED BD+C)

SD-04 Samples

Tile; G
Accessories; G
Transition Strips
Grout; G

SD-07 Certificates

Tile
Mortar, Grout, and Adhesive

SD-08 Manufacturer's Instructions

Maintenance Instructions

SD-10 Operation and Maintenance Data

Installation; G

SD-11 Closeout Submittals

LEED Documentation
Tile; (LEED)
Adhesives; (LEED)

1.4 OTHER SUBMITTAL REQUIREMENTS

1.4.1 Environmental Data

Submit Table 1 of ASTM E2129 for the following products: porcelain tile, mortar and grout.

1.5 QUALITY ASSURANCE

Installers to be from a company specializing in performing this type of work and have a minimum of two years experience. Each type and color of tile to be provided from a single source. Each type and color of mortar, adhesive, and grout to be provided from the same source.

1.6 DELIVERY, STORAGE, AND HANDLING

Ship tiles in sealed packages and clearly marked with the grade, type of tile, producer identification, and country of origin. Deliver materials to the project site in manufacturer's original unopened containers with seals unbroken and labels and hallmarks intact. Protect materials from weather, and store them under cover in accordance with manufacturer's printed instructions.

1.7 ENVIRONMENTAL REQUIREMENTS

Do not perform ceramic tile work unless the substrate and ambient temperature is at least 10 degrees C and rising. Maintain temperature above 10 degrees C while the work is being performed and for at least 7 days after completion of the work. When temporary heaters are used, ventilate the area to the outside to avoid carbon dioxide damage to new tilework.

1.8 WARRANTY

Provide manufacturer's standard performance guarantees or warranties that extend beyond a 1-year period.

1.9 EXTRA MATERIALS

Supply an extra 2 percent of each type tile used in clean and marked cartons.

PART 2 PRODUCTS

2.1 TILE

Furnish tiles that comply with ANSI A137.1 and are standard grade tiles. Provide a minimum breaking strength of 57 kg for wall tile and 113 kg for floor tile in accordance with ASTM C648. Provide floor tiles with a wet dynamic coefficient of friction (DCOF) value of 0.42 or greater when tested in accordance with ANSI A137.1 requirements. Provide glazed floor tile with a Class IV-Commercial classification as rated by the manufacturer when tested in accordance with ASTM C1027 for visible abrasion resistance as related to foot traffic. For materials like tile, accessories, and transition strips submit samples of sufficient size to show color range, pattern, type and joints. Submit manufacturer's catalog data.

2.1.1 Porcelain Tile

Furnish unglazed porcelain tile, covebullnose base and trim pieces with color extending uniformly through the body of the tile. Provide tile with a V1 aesthetic classification. Blend tiles in factory and in a packages to have same color range and continuous blend for installation. Provide nominal tile size(s) of 300 by 300 and 200 by 200 mm and 8 mm thick. Provide a 0.20 percent maximum water absorption in accordance with ASTM C373.

2.2 SETTING-BED

Submit manufacturer's catalog data. Compose the setting-bed of the following materials:

2.2.1 Aggregate for Concrete Fill

Conform to ASTM C33/C33M for aggregate fill. Do not exceed one-half the thickness of concrete fill for maximum size of coarse aggregate.

2.2.2 Portland Cement

Conform to ASTM C150/C150M for cement, Type I, white for wall mortar and gray for other uses.

2.2.3 Sand

Conform to ASTM C144 for sand.

2.2.4 Hydrated Lime

Conform to ASTM C206 for hydrated lime, Type S or ASTM C207, Type S.

2.3 WATER

Provide potable water.

2.4 MORTAR, GROUT, AND ADHESIVE

Submit certificates indicating conformance with specified requirements. Submit LEED documentation relative to low-emitting materials credit in accordance with LEED GBDC Ref Guide. Include in LEED Documentation Notebook. Interior adhesives, sealants, primers and sealants used as filler must meet the requirements of LEED low emitting materials credit. Submit manufacturer's catalog data. Conform to SCAQMD Rule 1168 and Bay Area AQMD Rule 8-51, and to the following for mortar, grout, adhesive, and sealant:

2.4.1 Latex-Portland Cement Mortar

TCNA Hdbk.

2.4.2 Ceramic Tile Grout

TCNA Hdbk; petroleum-free and plastic-free latex-portland cement grout.

2.4.3 Organic Adhesive

TCNA Hdbk, Type I. Water-resistant. Comply with applicable regulations regarding toxic and hazardous materials, GS-36, and as specified.

2.4.4 Sealants

Comply with applicable regulations regarding toxic and hazardous materials and as specified. Grout sealant must not change the color or alter the appearance of the grout.

2.4.5 Cementitious Backer Board

Provide cementitious backer units, for use as tile substrate over wood sub-floors, in accordance with TCNA Hdbk. Furnish 12.7 mm thick cementitious backer units.

2.5 TRANSITION STRIPS

Provide clear anodized aluminum transitions between tile and carpet or resilient flooring. Provide types as recommended by flooring manufacturer for both edges and transitions of flooring materials specified.

2.6 COLOR, TEXTURE, AND PATTERN

Provide color, pattern and texture in accordance with as indicated on the drawings. Color listed is not intended to limit the selection of equal colors from other manufacturers. Provide floor patterns as specified on the drawings.

PART 3 EXECUTION

3.1 PREPARATORY WORK AND WORKMANSHIP

Inspect surface to receive tile in conformance to the requirements of TCNA Hdbk for surface conditions for the type setting bed specified and for workmanship. Provide variations of tiled surfaces that fall within maximum values shown below:

TYPE	WALLS	FLOORS
Dry-Set Mortar	3 mm in 2.4 meter	3.0 mm in 3 meter
Organic Adhesives	3 mm in 2.4 meter	1.5 mm in 1 meter
Latex Portland Cement Mortar	3 mm in 2.4 meter	3.0 mm in 3 meter
Epoxy	3 mm in 2.4 meter	3.0 mm in 3 meter

3.2 GENERAL INSTALLATION REQUIREMENTS

Do not start tile work until roughing in for mechanical and electrical work has been completed and tested, and built-in items requiring membrane waterproofing have been installed and tested. Close space, in which tile is being set, to traffic and other work. Keep closed until tile is firmly set. Do not start floor tile installation in spaces requiring wall tile until after wall tile has been installed. Apply tile in colors and patterns indicated in the area shown on the drawings. Install tile with the respective surfaces in true even planes to the elevations and grades shown. Provide special shapes as required for sills, jambs, recesses, offsets, external corners, and other conditions to provide a complete and neatly finished installation. Solidly back tile bases and coves with mortar. Do not walk or work on newly tiled floors without using kneeling boards or equivalent protection of the tiled surface. Keep traffic off horizontal portland cement mortar installations for at least 72 hours. Keep all traffic off epoxy installed floors for at least 40 hours after grouting, and heavy traffic off for at least 7 days, unless otherwise specifically authorized by manufacturer. Dimension and draw detail drawings at a minimum scale of 6 mm = 300 mm. Include drawings of pattern at inside corners, outside corners, termination points and location of all equipment items such as thermostats, switch plates, mirrors and toilet accessories mounted on surface. Submit drawings showing ceramic tile pattern. Submit manufacturer's preprinted installation instructions.

3.3 INSTALLATION OF WALL TILE

Install wall tile in accordance with the TCNA Hdbk, method W244C and with grout joints as recommended by the manufacturer for the type of tile. Install thinner wall tile flush with thicker wall tile applied on same wall and provide installation materials as recommended by the tile and setting materials manufacturer's to achieve flush installation.

3.3.1 Dry-Set Mortar and Latex-Portland Cement Mortar

Use Latex-Portland Cement to install tile in accordance with TCNA Hdbk. Use Latex Portland Cement when installing porcelain ceramic tile.

3.3.2 Ceramic Tile Grout

Prepare and install ceramic tile grout in accordance with TCNA Hdbk. Provide and apply manufacturer's standard product for sealing grout joints in accordance with manufacturer's recommendations.

3.4 INSTALLATION OF FLOOR TILE

Install floor tile in accordance with TCNA Hdbk method F113 and with

grout joints as recommended by the manufacturer for the type of tile.

3.4.1 Dry-Set and Latex-Portland Cement

Use Latex-Portland cement mortar to install tile directly over properly cured, plane, clean concrete slabs in accordance with TCNA Hdbk. Use Latex Portland cement when installing porcelain ceramic tile.

3.4.2 Ceramic Tile Grout

Prepare and install ceramic tile grout in accordance with TCNA Hdbk. Provide and apply manufacturer's standard product for sealing grout joints in accordance with manufacturer's recommendations.

3.4.3 Waterproofing

Shower pans are specified in Section 22 00 00 PLUMBING, GENERAL PURPOSE.

3.5 INSTALLATION OF TRANSITION STRIPS

Install transition strips where indicated, in a manner similar to that of the ceramic tile floor and as recommended by the manufacturer. Provide thresholds full width of the opening. Install head joints at ends not exceeding 6 mm in width and grouted full.

3.6 EXPANSION JOINTS

Form and seal joints as specified in Section 07 92 00 JOINT SEALANTS.

3.6.1 Walls

Provide expansion joints at control joints in backing material. Wherever backing material changes, install an expansion joint to separate the different materials.

3.6.2 Floors

Provide expansion joints over construction joints, control joints, and expansion joints in concrete slabs. Extend expansion joints through setting-beds and fill.

3.7 CLEANING AND PROTECTING

Upon completion, thoroughly clean tile surfaces in accordance with manufacturer's approved cleaning instructions. Do not use acid for cleaning glazed tile. Clean floor tile with resinous grout or with factory mixed grout in accordance with printed instructions of the grout manufacturer. After the grout has set, provide a protective coat of a noncorrosive soap or other approved method of protection for tile wall surfaces. Cover tiled floor areas with building paper before foot traffic is permitted over the finished tile floors. Provide board walkways on tiled floors that are to be continuously used as passageways by workmen. Replace damaged or defective tiles. Submit copy of manufacturer's printed maintenance instructions.

-- End of Section --

THIS PAGE HAS BEEN INTENTIONALLY LEFT BLANK

SECTION 09 51 00

ACOUSTICAL CEILINGS
08/10

PART 1 GENERAL

1.1 REFERENCES

The publications listed below form a part of this specification to the extent referenced. The publications are referred to within the text by the basic designation only.

ASTM INTERNATIONAL (ASTM)

ASTM A641/A641M	(2009a) Standard Specification for Zinc-Coated (Galvanized) Carbon Steel Wire
ASTM C423	(2009a) Sound Absorption and Sound Absorption Coefficients by the Reverberation Room Method
ASTM C635/C635M	(2013a) Manufacture, Performance, and Testing of Metal Suspension Systems for Acoustical Tile and Lay-In Panel Ceilings
ASTM C636/C636M	(2013) Standard Practice for Installation of Metal Ceiling Suspension Systems for Acoustical Tile and Lay-In Panels
ASTM E1264	(2008; E 2010) Acoustical Ceiling Products
ASTM E1477	(1998a; R 2013) Luminous Reflectance Factor of Acoustical Materials by Use of Integrating-Sphere Reflectometers
ASTM E580/E580M	(2014) Application of Ceiling Suspension Systems for Acoustical Tile and Lay-In Panels in Areas Requiring Moderate Seismic Restraint

SCIENTIFIC CERTIFICATION SYSTEMS (SCS)

SCS	Scientific Certification Systems (SCS)Indoor Advantage

U.S. DEPARTMENT OF DEFENSE (DOD)

UFC 3-310-04	(2013) Seismic Design for Buildings

UL ENVIRONMENT (ULE)

ULE Greenguard	UL Greenguard Certification Program

1.2 SYSTEM DESCRIPTION

Provide sound controlling units mechanically mounted on a ceiling

suspension system for acoustical treatment. The unit size, texture, finish, and color must be as specified. The Contractor has the option to substitute inch-pound (I-P) Recessed Light Fixtures (RLF) for metric RLF. If the Contractor opts to furnish I-P RLF, other ceiling elements like acoustical ceiling tiles, air diffusers, air registers and grills, shall also be I-P products. Coordinate the whole ceiling system with other details, like the location of access panels and ceiling penetrations, etc., shown on the drawings. The Contractor is responsible for all associated labor and materials and for the final assembly and performance of the specified work and products if I-P products are used. The location and extent of acoustical treatment shall be as shown on the approved detail drawings. Submit drawings showing suspension system, method of anchoring and fastening, details, and reflected ceiling plan. Coordinate with paragraph RECLAMATION PROCEDURES for reclamation of mineral fiber acoustical ceiling panels to be removed from the job site.

1.2.1 Ceiling Sound Absorption

Determine the Noise Reduction Coefficient (NRC) in accordance with ASTM C423 Test Method.

1.2.2 Light Reflectance

Determine light reflectance factor in accordance with ASTM E1477 Test Method.

1.2.3 Other Submittals Requirements

The following shall be submitted:

a. Manufacturer's data indicating percentage of recycle material in acoustic ceiling tiles to verify affirmative procurement compliance.

b. Total weight and volume quantities of acoustic ceiling tiles with recycle material.

c. Certificate attesting that the mineral based acoustical units furnished for the project contain recycled material and showing an estimated percent of such material.

1.3 SUBMITTALS

Government approval is required for submittals with a "G" designation; submittals not having a "G" designation are for Contractor Quality Control approval. Submittals with an "S" are for inclusion in the Sustainability Notebook, in conformance to Section 01 33 29SUSTAINABILITY REQUIREMENTS. Submit the following in accordance with Section 01 33 00 SUBMITTAL PROCEDURES:

SD-02 Shop Drawings

Approved Detail Drawings

SD-03 Product Data

Certification; G

SD-04 Samples

Acoustical UnitsAcoustic Ceiling Tiles; G

SD-07 CertificatesAcoustical UnitsAcoustic Ceiling Tiles

1.4 SUSTAINABLE DESIGN CERTIFICATION

Product shall be third party certified in accordance with ULE Greenguard Gold, SCS Scientific Certification Systems Indoor Advantage Gold or equal. Certification shall be performed annually and shall be current.

1.5 DELIVERY, STORAGE. AND HANDLING

Deliver materials to the site in the manufacturer's original unopened containers with brand name and type clearly marked. Carefully handle and store materials in dry, watertight enclosures. Immediately before installation, store acoustical units for not less than 24 hours at the same temperature and relative humidity as the space where they will be installed in order to assure proper temperature and moisture acclimation.

1.6 ENVIRONMENTAL REQUIREMENTS

Maintain a uniform temperature of not less than 16 degrees C nor more than 29 degrees C and a relative humidity of not more than 70 percent for 24 hours before, during, and 24 hours after installation of acoustical units.

1.7 SCHEDULING

Complete and dry interior finish work such as plastering, concrete and terrazzo work before ceiling installation. Complete mechanical, electrical, and other work above the ceiling line; install and start operating heating, ventilating, and air conditioning systems in order to maintain temperature and humidity requirements.

1.8 WARRANTY

Provide manufacturer's standard performance guarantees or warranties that extend beyond a one year period. Include an agreement to repair or replace acoustical panels that fail within the warranty period in the standard performance guarantee or warranty. Failures include, but are not limited to, sagging and warping of panels; rusting and manufacturers defects of grid system.

1.9 EXTRA MATERIALS

Furnish spare tiles, from the same lot as those installed, of each color at the rate of 5 tiles for each 1000 tiles installed.

PART 2 PRODUCTS

2.1 ACOUSTICAL UNITS

Submit two samples of each type of acoustical unit and each type of suspension grid tee section showing texture, finish, and color. Conform acoustical units to ASTM E1264, Class A, and the following requirements:

2.1.1 Affirmative Procurement

Mineral Wool, Cellulose, and Laminated Paperboard used in acoustic ceiling

tiles are materials listed in the EPA's Comprehensive Procurement Guidelines (CPG) (http://www.epa.gov/cpg/). EPA's recommended Recovered Materials Content Levels for Mineral Wool, Cellulose, Structural Fiberboard and Laminated Paperboard are:

Product	Material	Percent of Post Consumer Materials	Percent of Total Recovered Materials
Laminate Paperboard	Post Consumer Paper	100	100
Rock Wool	Slag	75	
Cellulose	Post Consumer Paper	75	75

a. The recommended recovered materials content levels are based on the weight (not volume) of materials in the insulating core only.

b. Submit recycled material content data for acoustic ceiling tiles indicating compliance with affirmative procurement.

c. Submit total weight and volume quantities of acoustic ceiling tiles with recycle material.

2.1.2 Units for Exposed-Grid System

See interior design drawings for product.

2.1.2.1 Type

III (non-asbestos mineral fiber with painted finish)

2.1.2.2 Flame Spread

Class A, 25 or less

2.1.2.3 Pattern

C, E, K

2.1.2.4 Minimum NRC

0.5

2.1.2.5 Minimum Light Reflectance Coefficient
LR-1, 0.85 or greater

2.1.2.6 Nominal Size

600 by 600 mm

2.1.2.7 Edge Detail

Angled tegular

2.1.2.8 Finish

Factory-applied standard finish.

2.1.2.9 Minimum CAC

35

2.2 SUSPENSION SYSTEM

Provide standardexposed-grid standard width flange suspension system conforming to ASTM C635/C635M for intermediate-duty systems. Provide surfaces exposed to view of aluminum or steel with a factory-applied white baked-enamel finish. Provide wall molding having a flange of not less than 23 mm. Provide standard corners. Suspended ceiling framing system must have the capability to support the finished ceiling, light fixtures, air diffusers, and accessories, as shown. Provide a suspension system with a maximum deflection of 1/360 of the span length. Conform seismic details to the guidance in UFC 3-310-04 and ASTM E580/E580M. See drawings for product.

2.3 HANGERS

Provide hangers and attachment capable of supporting a minimum 1330 N ultimate vertical load without failure of supporting material or attachment.

2.3.1 Wires

Conform wires to ASTM A641/A641M, Class 1, 2.0 mm

2.4 FINISHES

Use manufacturer's standard textures, patterns and finishes as specified for acoustical units and suspension system members. Treat ceiling suspension system components to inhibit corrosion.

2.5 COLORS AND PATTERNS

Use colors and patterns for acoustical units and suspension system components white. See drawings.

PART 3 EXECUTION

3.1 INSTALLATION

Examine surfaces to receive directly attached acoustical units for unevenness, irregularities, and dampness that would affect quality and execution of the work. Complete and dry interior finish work such as plastering, concrete, and terrazzo work before installation. Complete and approve mechanical, electrical, and other work above the ceiling line prior to the start of acoustical ceiling installation. Provide acoustical work complete with necessary fastenings, clips, and other accessories required for a complete installation. Do not expose mechanical fastenings in the finished work. Lay out hangers for each individual room or space. Provide hangers to support framing around beams, ducts, columns, grilles, and other penetrations through ceilings. Keep main runners and carrying channels clear of abutting walls and partitions. Provide at least two main runners for each ceiling span. Wherever required to bypass an object with the hanger wires, install a subsuspension system so that all hanger wires will be plumb.

3.1.1 Suspension System

Install suspension system in accordance with ASTM C636/C636M and as specified herein. Do not suspend hanger wires or other loads from underside of steel decking.

3.1.1.1 Plumb Hangers

Install hangers plumb and not pressing against insulation covering ducts and pipes. Where lighting fixtures are supported from the suspended ceiling system, provide hangers at a minimum of four hangers per fixture and located not more than 150 mm from each corner of each fixture.

3.1.2 Wall Molding

Provide wall molding where ceilings abut vertical surfaces. Miter corners where wall moldings intersect or install corner caps. Secure wall molding not more than 75 mm from ends of each length and not more than 400 mm on centers between end fastenings. Provide wall molding springs at each acoustical unit in semi-exposed or concealed systems.

3.1.3 Acoustical Units

Install acoustical units in accordance with the approved installation instructions of the manufacturer. Ensure that edges of acoustical units are in close contact with metal supports, with each other, and in true alignment. Arrange acoustical units so that units less than one-half width are minimized. Hold units in exposed-grid system in place with manufacturer's standard hold-down clips, if units weigh less than 5 kg/square meter or if required for fire resistance rating.

3.1.4 Caulking

Seal all joints around pipes, ducts or electrical outlets penetrating the ceiling.

3.2 CEILING ACCESS PANELS

Locate ceiling access panels directly under the items which require access.

3.3 CLEANING

Following installation, clean dirty or discolored surfaces of acoustical units and leave them free from defects. Remove units that are damaged or improperly installed and provide new units as directed.

-- End of Section --

SECTION 09 90 00

PAINTS AND COATINGS
05/11

PART 1 GENERAL

1.1 REFERENCES

The publications listed below form a part of this specification to the extent referenced. The publications are referred to within the text by the basic designation only.

AMERICAN CONFERENCE OF GOVERNMENTAL INDUSTRIAL HYGIENISTS (ACGIH)

ACGIH 0100	(2001; Supplements 2002-2008) Documentation of the Threshold Limit Values and Biological Exposure Indices

ASTM INTERNATIONAL (ASTM)

ASTM D4263	(1983; R 2012) Indicating Moisture in Concrete by the Plastic Sheet Method
ASTM D4444	(2013) Use and Calibration of Hand-Held Moisture Meters
ASTM D523	(2014) Standard Test Method for Specular Gloss
ASTM D6386	(2010) Standard Practice for Preparation of Zinc (Hot-Dip Galvanized) Coated Iron and Steel Product and Hardware Surfaces for Painting
ASTM E2129	(2010) Standard Practice for Data Collection for Sustainability Assessment of Building Products
ASTM F1869	(2011) Measuring Moisture Vapor Emission Rate of Concrete Subfloor Using Anhydrous Calcium Chloride

MASTER PAINTERS INSTITUTE (MPI)

MPI 101	(Oct 2009) Epoxy Anti-Corrosive Metal Primer
MPI 107	(Oct 2009) Rust Inhibitive Primer (Water-Based)
MPI 108	(Oct 2009) High Build Epoxy Coating, Low Gloss
MPI 141	(Oct 2009) Interior High Performance Latex MPI Gloss Level 5
MPI 145	(Oct 2009) Institutional Low Odor / VOC

	Interior Latex, MPI Gloss Level 3
MPI 50	(Oct 2009) Interior Latex Primer Sealer
MPI 72	(Oct 2009) Polyurethane, Two Component, Pigmented, Gloss
MPI 79	(Oct 2009) Alkyd Anti-Corrosive Metal Primer
MPI 95	(Oct 2009) Quick Drying Primer for Aluminum

SCIENTIFIC CERTIFICATION SYSTEMS (SCS)

SCS	Scientific Certification Systems (SCS)Indoor Advantage
SCS SP-01	(2000) Environmentally Preferable Product Specification for Architectural and Anti-Corrosive Paints

SOCIETY FOR PROTECTIVE COATINGS (SSPC)

SSPC 7/NACE No.4	(2007; E 2004) Brush-Off Blast Cleaning
SSPC PA 1	(2000; E 2004) Shop, Field, and Maintenance Painting of Steel
SSPC PA Guide 3	(1982; E 1995) A Guide to Safety in Paint Application
SSPC SP 1	(1982; E 2004) Solvent Cleaning
SSPC SP 10/NACE No. 2	(2007) Near-White Blast Cleaning
SSPC SP 12/NACE No.5	(2002) Surface Preparation and Cleaning of Metals by Waterjetting Prior to Recoating
SSPC SP 2	(1982; E 2000; E 2004) Hand Tool Cleaning
SSPC SP 3	(1982; E 2004) Power Tool Cleaning
SSPC SP 6/NACE No.3	(2007) Commercial Blast Cleaning
SSPC VIS 1	(2002; E 2004) Guide and Reference Photographs for Steel Surfaces Prepared by Dry Abrasive Blast Cleaning
SSPC VIS 3	(2004) Guide and Reference Photographs for Steel Surfaces Prepared by Hand and Power Tool Cleaning
SSPC VIS 4/NACE VIS 7	(1998; E 2000; E 2004) Guide and Reference Photographs for Steel Surfaces Prepared by Waterjetting

U.S. ARMY CORPS OF ENGINEERS (USACE)

EM 385-1-1	(2008; Errata 2011) Safety and Health

	Requirements Manual
U.S. ENVIRONMENTAL PROTECTION AGENCY (EPA)	
EPA Method 24	(2000) Determination of Volatile Matter Content, Water Content, Density, Volume Solids, and Weight Solids of Surface Coatings
U.S. GENERAL SERVICES ADMINISTRATION (GSA)	
FED-STD-313	(2014; Rev E) Material Safety Data, Transportation Data and Disposal Data for Hazardous Materials Furnished to Government Activities
U.S. GREEN BUILDING COUNCIL (USGBC)	
LEED NC	(2009) Leadership in Energy and Environmental Design(tm) New Construction Rating System
U.S. NATIONAL ARCHIVES AND RECORDS ADMINISTRATION (NARA)	
29 CFR 1910.1000	Air Contaminants
UL ENVIRONMENT (ULE)	
ULE Greenguard	UL Greenguard Certification Program

1.2 SUBMITTALS

Government approval is required for submittals with a "G" designation; submittals not having a "G" designation are for Contractor Quality Control approval. Submittals with an "S" are for inclusion in the Sustainability Notebook, in conformance to Section 01 33 29SUSTAINABILITY REQUIREMENTS. Submit the following in accordance with Section 01 33 00 SUBMITTAL PROCEDURES:

The current MPI, "Approved Product List" which lists paint by brand, label, product name and product code as of the date of contract award, will be used to determine compliance with the submittal requirements of this specification. The Contractor may choose to use a subsequent MPI "Approved Product List", however, only one list may be used for the entire contract and each coating system is to be from a single manufacturer. All coats on a particular substrate must be from a single manufacturer. No variation from the MPI Approved Products List is acceptable.

Samples of specified materials may be taken and tested for compliance with specification requirements.

In keeping with the intent of Executive Order 13101, "Greening the Government through Waste Prevention, Recycling, and Federal Acquisition", products certified by SCS as meeting SCS SP-01 shall be given preferential consideration over registered products. Products that are registered shall be given preferential consideration over products not carrying any EPP designation.

SD-03 Product Data

Certification

Environmental Data

Materials; (LEED NC)

Submit documentation indicating percentage of post-industrial and post-consumer recycled content per unit of product. Indicate relative dollar value of recycled content products to total dollar value of products included in project.

Coating; G

Manufacturer's Technical Data Sheets; (LEED)

Indicate VOC content.

SD-04 Samples

Color; G

Submit manufacturer's samples of paint colors. Cross reference color samples to color scheme as indicated.

Applicator's qualificationsSD-08 Manufacturer's Instructions

Mixing

Detailed mixing instructions, minimum and maximum application temperature and humidity, potlife, and curing and drying times between coats.

Manufacturer's Material Safety Data Sheets

Submit manufacturer's Material Safety Data Sheets for coatings, solvents, and other potentially hazardous materials, as defined in FED-STD-313.

SD-10 Operation and Maintenance Data

Coatings:; G

Preprinted cleaning and maintenance instructions for all coating systems shall be provided.

SD-11 Closeout Submittals

Materials; (LEED)

LEED documentation relative to recycled content credit in accordance with LEED Reference Guide. Include in LEED Documentation Notebook.

LEED documentation relative to low emitting materials credit in accordance with LEED Reference Guide. Include in LEED

Documentation Notebook.

1.3 APPLICATOR'S QUALIFICATIONS

1.3.1 Contractor Qualification

Submit the name, address, telephone number, FAX number, and e-mail address of the contractor that will be performing all surface preparation and coating application. Submit evidence that key personnel have successfully performed surface preparation and application of coatings on on a minimum of three similar projects within the past three years. List information by individual and include the following:

a. Name of individual and proposed position for this work.

b. Information about each previous assignment including:

Position or responsibility

Employer (if other than the Contractor)

Name of facility owner

Mailing address, telephone number, and telex number (if non-US) of facility owner

Name of individual in facility owner's organization who can be contacted as a reference

Location, size and description of structure

Dates work was carried out

Description of work carried out on structure

1.4 QUALITY ASSURANCE

1.4.1 Sustainable Design Certification

Product shall be third party certified in accordance with ULE Greenguard Gold, SCS Scientific Certification Systems Indoor Advantage Gold or equal. Certification shall be performed annually and shall be current.

1.5 REGULATORY REQUIREMENTS

1.5.1 Environmental Protection

In addition to requirements specified elsewhere for environmental protection, provide coating materials that conform to the restrictions of the local Air Pollution Control District and regional jurisdiction. Notify Contracting Officer of any paint specified herein which fails to conform.

1.5.2 Lead Content

Do not use coatings having a lead content over 0.06 percent by weight of nonvolatile content.

1.5.3 Chromate Content

Do not use coatings containing zinc-chromate or strontium-chromate.

1.5.4 Asbestos Content

Materials shall not contain asbestos.

1.5.5 Mercury Content

Materials shall not contain mercury or mercury compounds.

1.5.6 Silica

Abrasive blast media shall not contain free crystalline silica.

1.5.7 Human Carcinogens

Materials shall not contain ACGIH 0100 confirmed human carcinogens (A1) or suspected human carcinogens (A2).

1.6 PACKAGING, LABELING, AND STORAGE

Paints shall be in sealed containers that legibly show the contract specification number, designation name, formula or specification number, batch number, color, quantity, date of manufacture, manufacturer's formulation number, manufacturer's directions including any warnings and special precautions, and name and address of manufacturer. Pigmented paints shall be furnished in containers not larger than 20 liters. Paints and thinners shall be stored in accordance with the manufacturer's written directions, and as a minimum, stored off the ground, under cover, with sufficient ventilation to prevent the buildup of flammable vapors, and at temperatures between 4 to 35 degrees C. Do not store paint, polyurethane, varnish, or wood stain products with materials that have a high capacity to adsorb VOC emissions, including ceilings, gypsum board or carpets. Do not store paint, polyurethane, varnish, or wood stain products in occupied spaces.

1.7 SAFETY AND HEALTH

Apply coating materials using safety methods and equipment in accordance with the following:

Work shall comply with applicable Federal, State, and local laws and regulations, and with the ACCIDENT PREVENTION PLAN, including the Activity Hazard Analysis as specified in Section 01 35 26 GOVERNMENT SAFETY REQUIREMENTS and in Appendix A of EM 385-1-1. The Activity Hazard Analysis shall include analyses of the potential impact of painting operations on painting personnel and on others involved in and adjacent to the work zone.

1.7.1 Safety Methods Used During Coating Application

Comply with the requirements of SSPC PA Guide 3.

1.7.2 Toxic Materials

To protect personnel from overexposure to toxic materials, conform to the

most stringent guidance of:

a. The applicable manufacturer's Material Safety Data Sheets (MSDS) or local regulation.

b. 29 CFR 1910.1000.

c. ACGIH 0100, threshold limit values.

1.8 ENVIRONMENTAL CONDITIONS

Comply, at minimum, with manufacturer recommendations for space ventilation during and after installation.

1.8.1 Coatings

Do not apply coating when air or substrate conditions are:

a. Less than 3 degrees C above dew point;

b. Below 10 degrees C or over 35 degrees C, unless specifically pre-approved by the Contracting Officer and the product manufacturer. Under no circumstances shall application conditions exceed manufacturer recommendations.

1.8.2 Post-Application

Vacate space for as long as possible after application. Wait a minimum of 48 hours before occupying freshly painted rooms. Maintain one of the following ventilation conditions during the curing period, or for 72 hours after application:

a. Supply 100 percent outside air 24 hours a day.

b. Supply airflow at a rate of 6 air changes per hour, when outside temperatures are between 13 degrees C and 29 degrees C and humidity is between 30 percent and 60 percent.

c. Supply airflow at a rate of 1.5 air changes per hour, when outside air conditions are not within the range stipulated above.

1.9 SUSTAINABLE DESIGN REQUIREMENTS

1.9.1 Environmental Data

Submit Table 1 of ASTM E2129 for the following products: coatings and thinners.

1.10 SCHEDULING

Allow paint, polyurethane, varnish, and wood stain installations to cure prior to the installation of materials that adsorb VOCs.

1.11 COLOR SELECTION

Colors of finish coats shall be as indicated or specified. Where not indicated or specified, colors shall be selected by the Contracting Officer. Manufacturers' names and color identification are used for the purpose of color identification only. Named products are acceptable for

use only if they conform to specified requirements. Products of other manufacturers are acceptable if the colors approximate colors indicated and the product conforms to specified requirements.

Tint each coat progressively darker to enable confirmation of the number of coats.

Color, texture, and pattern of wall coating systems shall be as indicated.

1.12 LOCATION AND SURFACE TYPE TO BE PAINTED

1.12.1 Painting Included

Where a space or surface is indicated to be painted, include the following unless indicated otherwise.

a. Surfaces behind portable objects and surface mounted articles readily detachable by removal of fasteners, such as screws and bolts.

b. New factory finished surfaces that require identification or color coding and factory finished surfaces that are damaged during performance of the work.

c. Existing coated surfaces that are damaged during performance of the work.

1.12.1.1 Exterior Painting

Includes new surfaces of the buildings and appurtenances. Also included are existing coated surfaces made bare by cleaning operations.

1.12.1.2 Interior Painting

Includes new surfaces of the buildings and appurtenances as indicated and existing coated surfaces made bare by cleaning operations. Where a space or surface is indicated to be painted, include the following items, unless indicated otherwise.

b. Other contiguous surfaces.

1.12.2 Painting Excluded

Do not paint the following unless indicated otherwise.

a. Surfaces concealed and made inaccessible by panelboards, fixed ductwork, machinery, and equipment fixed in place.

b. Surfaces in concealed spaces. Concealed spaces are defined as enclosed spaces above suspended ceilings, furred spaces, attic spaces, crawl spaces, elevator shafts and chases.

c. Steel to be embedded in concrete.

d. Copper, stainless steel, aluminum, brass, and lead except existing coated surfaces.

e. Hardware, fittings, and other factory finished items.

1.12.3 Mechanical and Electrical Painting

See Section 09 97 13.27 EXTERIOR COATING OF STEEL STRUCTURES for painting of fuel piping. See section 09 97 13.15 LOW VOC POLYSULFIDE INTERIOR COATING OF WELDED STEEL PETROLEUM FUEL TANKS for tank interior and Section 09 97 13.27 EXTERIOR COATING OF STEEL STRUCTURES for exterior coating of steel structures.

1.12.3.1 Fire Extinguishing Sprinkler Systems

Clean, pretreat, prime, and paint new fire extinguishing sprinkler systems including valves, piping, conduit, hangers, supports, miscellaneous metalwork, and accessories. Apply coatings to clean, dry surfaces, using clean brushes. Clean the surfaces to remove dust, dirt, rust, and loose mill scale. Immediately after cleaning, provide the metal surfaces with one coat primer per schedules. Shield sprinkler heads with protective covering while painting is in progress. Upon completion of painting, remove protective covering from sprinkler heads. Remove sprinkler heads which have been painted and replace with new sprinkler heads. Provide primed surfaces with the following:

a. Piping in Unfinished Areas: Provide primed surfaces with one coat of red alkyd gloss enamel applied to a minimum dry film thickness of 0.025 mm in attic spaces, spaces above suspended ceilings, crawl spaces, pipe chases, mechanical equipment room, and spaces where walls or ceiling are not painted or not constructed of a prefinished material. In lieu of red enamel finish coat, provide piping with 50 mm wide red enamel bands or self-adhering red plastic bands spaced at maximum of 6 meters intervals.

b. Piping in Finished Areas: Provide primed surfaces with two coats of paint to match adjacent surfaces, except provide valves and operating accessories with one coat of red alkyd gloss enamel applied to a minimum dry film thickness of 0.025 mm. Provide piping with 50 mm wide red enamel bands or self-adhering red plastic bands spaced at maximum of 6 meters intervals throughout the piping systems.

1.12.4 Definitions and Abbreviations

1.12.4.1 Qualification Testing

Qualification testing is the performance of all test requirements listed in the product specification. This testing is accomplished by MPI to qualify each product for the MPI Approved Product List, and may also be accomplished by Contractor's third party testing lab if an alternative to Batch Quality Conformance Testing by MPI is desired.

1.12.4.2 Batch Quality Conformance Testing

Batch quality conformance testing determines that the product provided is the same as the product qualified to the appropriate product specification. This testing shall only be accomplished by MPI testing lab.

1.12.4.3 Coating

A film or thin layer applied to a base material called a substrate. A coating may be a metal, alloy, paint, or solid/liquid suspensions on various substrates (metals, plastics, wood, paper, leather, cloth, etc.). They may be applied by electrolysis, vapor deposition, vacuum, or

mechanical means such as brushing, spraying, calendaring, and roller coating. A coating may be applied for aesthetic or protective purposes or both. The term "coating" as used herein includes emulsions, enamels, stains, varnishes, sealers, epoxies, and other coatings, whether used as primer, intermediate, or finish coat. The terms paint and coating are used interchangeably.

1.12.4.4 DFT or dft

Dry film thickness, the film thickness of the fully cured, dry paint or coating.

1.12.4.5 DSD

Degree of Surface Degradation, the MPI system of defining degree of surface degradation. Five (5) levels are generically defined under the Assessment sections in the MPI Maintenance Repainting Manual.

1.12.4.6 EPP

Environmentally Preferred Products, a standard for determining environmental preferability in support of Executive Order 13101.

1.12.4.7 EXT

MPI short term designation for an exterior coating system.

1.12.4.8 INT

MPI short term designation for an interior coating system.

1.12.4.9 micron / microns

The metric measurement for 0.001 mm or one/one-thousandth of a millimeter.

1.12.4.10 mil / mils

The English measurement for 0.001 in or one/one-thousandth of an inch, equal to 25.4 microns or 0.0254 mm.

1.12.4.11 mm

The metric measurement for millimeter, 0.001 meter or one/one-thousandth of a meter.

1.12.4.12 MPI Gloss Levels

MPI system of defining gloss. Seven (7) gloss levels (G1 to G7) are generically defined under the Evaluation sections of the MPI Manuals. Traditionally, Flat refers to G1/G2, Eggshell refers to G3, Semigloss refers to G5, and Gloss refers to G6.

Gloss levels are defined by MPI as follows:

Gloss Level	Description	Units at 60 degrees	Units at 85 degrees
G1	Matte or Flat	0 to 5	10 max
G2	Velvet	0 to 10	10 to 35

Gloss Level	Description	Units at 60 degrees	Units at 85 degrees
G3	Eggshell	10 to 25	10 to 35
G4	Satin	20 to 35	35 min
G5	Semi-Gloss	35 to 70	
G6	Gloss	70 to 85	
G7	High Gloss		

Gloss is tested in accordance with ASTM D523. Historically, the Government has used Flat (G1 / G2), Eggshell (G3), Semi-Gloss (G5), and Gloss (G6).

1.12.4.13 MPI System Number

The MPI coating system number in each Division found in either the MPI Architectural Painting Specification Manual or the Maintenance Repainting Manual and defined as an exterior (EXT/REX) or interior system (INT/RIN). The Division number follows the CSI Master Format.

1.12.4.14 Paint

See Coating definition.

PART 2 PRODUCTS

2.1 MATERIALS

Conform to the coating specifications and standards referenced in PART 3. Submit manufacturer's technical data sheets for specified coatings and solvents.

PART 3 EXECUTION

3.1 PROTECTION OF AREAS AND SPACES NOT TO BE PAINTED

Prior to surface preparation and coating applications, remove, mask, or otherwise protect, hardware, hardware accessories, machined surfaces, radiator covers, plates, lighting fixtures, public and private property, and other such items not to be coated that are in contact with surfaces to be coated. Following completion of painting, workmen skilled in the trades involved shall reinstall removed items. Restore surfaces contaminated by coating materials, to original condition and repair damaged items.

3.2 SURFACE PREPARATION

Remove dirt, splinters, loose particles, grease, oil, and other foreign matter and substances deleterious to coating performance as specified for each substrate before application of paint or surface treatments. Oil and grease shall be removed prior to mechanical cleaning. Cleaning shall be programmed so that dust and other contaminants will not fall on wet, newly painted surfaces. Exposed ferrous metals such as nail heads on or in contact with surfaces to be painted with water-thinned paints, shall be spot-primed with a suitable corrosion-inhibitive primer capable of preventing flash rusting and compatible with the coating specified for the adjacent areas.

3.3 PREPARATION OF METAL SURFACES

3.3.1 Existing and New Ferrous Surfaces

a. Ferrous Surfaces including Shop-coated Surfaces and Small Areas That Contain Rust, Mill Scale and Other Foreign Substances: detergent wash in accordance with SSPC SP 1 to remove oil and grease. Water jetting to SSPC SP 12/NACE No.5 WJ-4 may be used to remove loose coating and other loose materials. Use inhibitor as recommended by coating manufacturer to prevent premature rusting. Shop-coated ferrous surfaces shall be protected from corrosion by treating and touching up corroded areas immediately upon detection.

b. Surfaces With More Than 20 Percent Rust, Mill Scale, and Other Foreign Substances: Clean entire surface in accordance with SSPC SP 6/NACE No.3/SSPC SP 12/NACE No.5 WJ-3.

3.3.2 Final Ferrous Surface Condition:

For tool cleaned surfaces, the requirements are stated in SSPC SP 2 and SSPC SP 3. As a visual reference, cleaned surfaces shall be similar to photographs in SSPC VIS 3.

For abrasive blast cleaned surfaces, the requirements are stated in SSPC 7/NACE No.4, SSPC SP 6/NACE No.3, and SSPC SP 10/NACE No. 2. As a visual reference, cleaned surfaces shall be similar to photographs in SSPC VIS 1.

For waterjet cleaned surfaces, the requirements are stated in SSPC SP 12/NACE No.5. As a visual reference, cleaned surfaces shall be similar to photographs in SSPC VIS 4/NACE VIS 7.

3.3.3 Galvanized Surfaces

a. New or Existing Galvanized Surfaces With Only Dirt and Zinc Oxidation Products: Clean with non-alkaline detergent solution in accordance with SSPC SP 1. If the galvanized metal has been passivated or stabilized, the coating shall be completely removed by brush-off abrasive blast. New galvanized steel to be coated shall not be "passivated" or "stabilized" If the absence of hexavalent stain inhibitors is not documented, test as described in ASTM D6386, Appendix X2, and remove by one of the methods described therein.

3.3.4 Non-Ferrous Metallic Surfaces

Aluminum and aluminum-alloy, lead, copper, and other nonferrous metal surfaces.

Surface Cleaning: Solvent clean in accordance with SSPC SP 1 and wash with mild non-alkaline detergent to remove dirt and water soluble contaminants.

3.4 PREPARATION OF CONCRETE AND CEMENTITIOUS SURFACE

3.4.1 Concrete and Masonry

a. Curing: Concrete, stucco and masonry surfaces shall be allowed to cure at least 30 days before painting, except concrete slab on grade,

which shall be allowed to cure 90 days before painting.

b. Surface Cleaning: Remove the following deleterious substances.

(1) Dirt, Grease, and Oil: Wash new surfaces with a solution composed of 0.2 liter trisodium phosphate, 0.1 liter household detergent, and 6.4 liters of warm water. Then rinse thoroughly with fresh water.

(2) Fungus and Mold: Wash new surfaces with a solution composed of 0.2 liter trisodium phosphate, 0.1 liter household detergent, 1.6 liters 5 percent sodium hypochlorite solution and 4.8 liters of warm water. Rinse thoroughly with fresh water.

(3) Paint and Loose Particles: Remove by wire brushing.

(4) Efflorescence: Remove by scraping or wire brushing followed by washing with a 5 to 10 percent by weight aqueous solution of hydrochloric (muriatic) acid. Do not allow acid to remain on the surface for more than five minutes before rinsing with fresh water. Do not acid clean more than 0.4 square meter of surface, per workman, at one time.

c. Cosmetic Repair of Minor Defects: Repair or fill mortar joints and minor defects, including but not limited to spalls, in accordance with manufacturer's recommendations and prior to coating application.

d. Allowable Moisture Content: Latex coatings may be applied to damp surfaces, but not to surfaces with droplets of water. Do not apply epoxies to damp vertical surfaces as determined by ASTM D4263 or horizontal surfaces that exceed 3 lbs of moisture per 1000 square feet in 24 hours as determined by ASTM F1869. In all cases follow manufacturers recommendations. Allow surfaces to cure a minimum of 30 days before painting.

3.4.2 Gypsum Board, Plaster, and Stucco

a. Surface Cleaning: Plaster and stucco shall be clean and free from loose matter; gypsum board shall be dry. Remove loose dirt and dust by brushing with a soft brush, rubbing with a dry cloth, or vacuum-cleaning prior to application of the first coat material. A damp cloth or sponge may be used if paint will be water-based.

b. Repair of Minor Defects: Prior to painting, repair joints, cracks, holes, surface irregularities, and other minor defects with patching plaster or spackling compound and sand smooth.

c. Allowable Moisture Content: Latex coatings may be applied to damp surfaces, but not surfaces with droplets of water. Do not apply epoxies to damp surfaces as determined by ASTM D4263. New plaster to be coated shall have a maximum moisture content of 8 percent, when measured in accordance with ASTM D4444, Method A, unless otherwise authorized. In addition to moisture content requirements, allow new plaster to age a minimum of 30 days before preparation for painting.

3.5 APPLICATION

3.5.1 Coating Application

Painting practices shall comply with applicable federal, state and local laws enacted to insure compliance with Federal Clean Air Standards. Apply coating materials in accordance with SSPC PA 1. SSPC PA 1 methods are applicable to all substrates, except as modified herein.

At the time of application, paint shall show no signs of deterioration. Uniform suspension of pigments shall be maintained during application.

Unless otherwise specified or recommended by the paint manufacturer, paint may be applied by brush, roller, or spray. Use trigger operated spray nozzles for water hoses. Rollers for applying paints and enamels shall be of a type designed for the coating to be applied and the surface to be coated. Wear protective clothing and respirators when applying oil-based paints or using spray equipment with any paints.

Paints, except water-thinned types, shall be applied only to surfaces that are completely free of moisture as determined by sight or touch.

Thoroughly work coating materials into joints, crevices, and open spaces. Special attention shall be given to insure that all edges, corners, crevices, welds, and rivets receive a film thickness equal to that of adjacent painted surfaces.

Each coat of paint shall be applied so dry film shall be of uniform thickness and free from runs, drops, ridges, waves, pinholes or other voids, laps, brush marks, and variations in color, texture, and finish. Hiding shall be complete.

Touch up damaged coatings before applying subsequent coats. Interior areas shall be broom clean and dust free before and during the application of coating material.

Apply paint to new fire extinguishing sprinkler systems including valves, piping, conduit, hangers, supports, miscellaneous metal work, and accessories. Shield sprinkler heads with protective coverings while painting is in progress. Remove sprinkler heads which have been painted and replace with new sprinkler heads. For piping in unfinished spaces, provide primed surfaces with one coat of red alkyd gloss enamel to a minimum dry film thickness of 0.025 mm. Unfinished spaces include attic spaces, spaces above suspended ceilings, crawl spaces, pipe chases, mechanical equipment room, and space where walls or ceiling are not painted or not constructed of a prefinished material. For piping in finished areas, provide prime surfaces with two coats of paint to match adjacent surfaces, except provide valves and operating accessories with one coat of red alkyd gloss enamel. Upon completion of painting, remove protective covering from sprinkler heads.

a. Drying Time: Allow time between coats, as recommended by the coating manufacturer, to permit thorough drying, but not to present topcoat adhesion problems. Provide each coat in specified condition to receive next coat.

b. Primers, and Intermediate Coats: Do not allow primers or intermediate coats to dry more than 30 days, or longer than recommended by manufacturer, before applying subsequent coats. Follow manufacturer's

recommendations for surface preparation if primers or intermediate coats are allowed to dry longer than recommended by manufacturers of subsequent coatings. Each coat shall cover surface of preceding coat or surface completely, and there shall be a visually perceptible difference in shades of successive coats.

c. Finished Surfaces: Provide finished surfaces free from runs, drops, ridges, waves, laps, brush marks, and variations in colors.

d. Thermosetting Paints: Topcoats over thermosetting paints (epoxies and urethanes) should be applied within the overcoating window recommended by the manufacturer.

3.5.2 Mixing and Thinning of Paints

Reduce paints to proper consistency by adding fresh paint, except when thinning is mandatory to suit surface, temperature, weather conditions, application methods, or for the type of paint being used. Obtain written permission from the Contracting Officer to use thinners. The written permission shall include quantities and types of thinners to use.

When thinning is allowed, paints shall be thinned immediately prior to application with not more than 0.125 L of suitable thinner per liter. The use of thinner shall not relieve the Contractor from obtaining complete hiding, full film thickness, or required gloss. Thinning shall not cause the paint to exceed limits on volatile organic compounds. Paints of different manufacturers shall not be mixed.

3.5.3 Two-Component Systems

Two-component systems shall be mixed in accordance with manufacturer's instructions. Any thinning of the first coat to ensure proper penetration and sealing shall be as recommended by the manufacturer for each type of substrate.

3.5.4 Coating Systems

a. Systems by Substrates: Apply coatings that conform to the respective specifications listed in the following Tables:

Table

Division 5. Exterior Metal, Ferrous and Non-Ferrous Paint Table

Division 4. Interior Concrete Masonry Units Paint Table
Division 5. Interior Metal, Ferrous and Non-Ferrous Paint Table

Division 9: Interior Plaster, Gypsum Board, Textured Surfaces Paint Table

b. Minimum Dry Film Thickness (DFT): Apply paints, primers, varnishes, enamels, undercoats, and other coatings to a minimum dry film thickness of 0.038 mm each coat unless specified otherwise in the Tables. Coating thickness where specified, refers to the minimum dry film thickness.

c. Coatings for Surfaces Not Specified Otherwise: Coat surfaces which

have not been specified, the same as surfaces having similar conditions of exposure.

d. Existing Surfaces Damaged During Performance of the Work, Including New Patches In Existing Surfaces: Coat surfaces with the following:

(1) One coat of primer.

(2) One coat of undercoat or intermediate coat.

(3) One topcoat to match adjacent surfaces.

e. Existing Coated Surfaces To Be Painted: Apply coatings conforming to the respective specifications listed in the Tables herein, except that pretreatments, sealers and fillers need not be provided on surfaces where existing coatings are soundly adhered and in good condition. Do not omit undercoats or primers.

3.6 COATING SYSTEMS FOR METAL

Apply coatings of Tables in Division 5 for Exterior and Interior.

a. Apply specified ferrous metal primer on the same day that surface is cleaned, to surfaces that meet all specified surface preparation requirements at time of application.

b. Inaccessible Surfaces: Prior to erection, use one coat of specified primer on metal surfaces that will be inaccessible after erection.

c. Shop-primed Surfaces: Touch up exposed substrates and damaged coatings to protect from rusting prior to applying field primer.

e. Pipes and Tubing: The semitransparent film applied to some pipes and tubing at the mill is not to be considered a shop coat, but shall be overcoated with the specified ferrous-metal primer prior to application of finish coats.

f. Exposed Nails, Screws, Fasteners, and Miscellaneous Ferrous Surfaces. On surfaces to be coated with water thinned coatings, spot prime exposed nails and other ferrous metal with latex primer MPI 107.

3.7 PIPING IDENTIFICATION

See Section 09 97 13.27 EXTERIOR COATING OF STEEL STRUCTURES for painting of fuel piping. See section 09 97 13.15 LOW VOC POLYSULFIDE INTERIOR COATING OF WELDED STEEL PETROLEUM FUEL TANKS for tank interior and Section 09 97 13.27 EXTERIOR COATING OF STEEL STRUCTURES for exterior coating of steel structures.

3.8 INSPECTION AND ACCEPTANCE

In addition to meeting previously specified requirements, demonstrate mobility of moving components, including swinging and sliding doors, cabinets, and windows with operable sash, for inspection by the Contracting Officer. Perform this demonstration after appropriate curing and drying times of coatings have elapsed and prior to invoicing for final payment.

3.9 WASTE MANAGEMENT

As specified in the Waste Management Plan and as follows. Do not use kerosene or any such organic solvents to clean up water based paints. Properly dispose of paints or solvents in designated containers. Close and seal partially used containers of paint to maintain quality as necessary for reuse. Store in protected, well-ventilated, fire-safe area at moderate temperature. Place materials defined as hazardous or toxic waste in designated containers. Coordinate with manufacturer for take-back program. Set aside scrap to be returned to manufacturer for recycling into new product. When such a service is not available, local recyclers shall be sought after to reclaim the materials. Set aside extra paint for future color matches or reuse by the Government. Where local options exist for leftover paint recycling, collect all waste paint by type and provide for delivery to recycling or collection facility for reuse by local organizations.

3.10 PAINT TABLES

All DFT's are minimum values. Use only materials with a GPS green check mark having a minimum MPI "Environmentally Friendly" E2 rating based on VOC (EPA Method 24) content levels. Use only interior paints and coatings that meet VOC requirements of LEED low emitting materials credit in the Operations Building. Acceptable products are listed in the MPI Green Approved Products List, available at http://www.specifygreen.com/APL/ProductIdxByMPInum.asp.

3.10.1 EXTERIOR PAINT TABLES

DIVISION 5: EXTERIOR METAL, FERROUS AND NON-FERROUS PAINT TABLE
STEEL / FERROUS SURFACES

A. New steel blast cleaned to SSPC SP 10/NACE No. 2:

1. Pigmented Polyurethane
   MPI EXT 5.1J-G6 (Gloss)

Primer:	Intermediate:	Topcoat:
MPI 101	MPI 108	MPI 72

System DFT: 212 microns

EXTERIOR GALVANIZED SURFACES, To be painted where indicated.

B. New Galvanized surfaces:

1. Pigmented Polyurethane
   MPI EXT 5.3L-G6 (Gloss)

Primer:	Intermediate:	Topcoat:
MPI 101	N/A	MPI 72

System DFT: 125 microns

3.10.2 INTERIOR PAINT TABLES

DIVISION 5: INTERIOR METAL, FERROUS AND NON-FERROUS PAINT TABLE

INTERIOR STEEL / FERROUS SURFACES

A. Metal, Fire extinguishing sprinkler systems including valves, conduit, hangers, supports, and miscellaneous metal items not otherwise specified except floors, hot metal surfaces, and new prefinished equipment:

1. High Performance Architectural Latex
   MPI INT 5.1R-G5 (Semigloss)

Primer:	Intermediate:	Topcoat:
MPI 79	MPI 141	MPI 141

   System DFT: 125 microns

E. Miscellaneous non-ferrous metal items not otherwise specified except floors, hot metal surfaces, and new prefinished equipment. Match surrounding finish:

1. High Performance Architectural Latex
   MPI INT 5.4F-G5 (Semigloss)

Primer:	Intermediate:	Topcoat:
MPI 95	MPI 141	MPI 141

   System DFT: 125 microns

DIVISION 9: INTERIOR PLASTER, GYPSUM BOARD, TEXTURED SURFACES PAINT TABLE

A. New Wallboard not otherwise specified:

1. Institutional Low Odor / Low VOC Latex

   New; MPI INT 9.2M-G3 (Eggshell) / Existing; MPI RIN 9.2M-G3 (Eggshell)

Primer:	Intermediate:	Topcoat:
MPI 50	MPI 145	MPI 145

   System DFT: 100 microns

-- End of Section --

SECTION 09 97 13.15

LOW VOC POLYSULFIDE INTERIOR COATING OF WELDED STEEL PETROLEUM FUEL TANKS
02/15

PART 1 GENERAL

1.1 REFERENCES

The publications listed below form a part of this specification to the extent referenced. The publications are referred to in the text by the basic designation only.

AMERICAN PETROLEUM INSTITUTE (API)

API Std 653	(2014) Tank Inspection, Repair, Alteration, and Reconstruction

ASTM INTERNATIONAL (ASTM)

ASTM D1141	(1998; R 2013) Standard Practice for the Preparation of Substitute Ocean Water
ASTM D1210	(2005; R 2014) Fineness of Dispersion of Pigment-Vehicle Systems by Hegman-Type Gage
ASTM D1475	(2013) Standard Test Method for Density of Liquid Coatings, Inks, and Related Products
ASTM D1640/D1640M	(2014) Standard Test Methods for Drying, Curing, or Film Formation of Organic Coatings
ASTM D185	(2007; R 2012) Standard Test for Coarse Particles in Pigments
ASTM D2196	(2010) Standard Test Methods for Rheological Properties of Non-Newtonian Materials by Rotational (Brookfield type) Viscometer
ASTM D2240	(2005; R 2010) Standard Test Method for Rubber Property - Durometer Hardness
ASTM D2369	(2010; E 2011) Volatile Content of Coatings
ASTM D2370	(1998; R 2010) Tensile Properties of Organic Coatings
ASTM D2698	(2005) Standard Test Method for Determination of the Pigment Content of Solvent-Reducible Paints by High-Speed Centrifuging
ASTM D2794	(1993; R 2010) Resistance of Organic Coatings to the Effects of Rapid Deformation (Impact)

ASTM D2805	(2011) Standard Test Method for Hiding Power of Paints by Reflectometry
ASTM D3276	(2007) Painting Inspectors (Metal Substrates)
ASTM D3278	(1996; R 2011) Flash Point of Liquids by Small Scale Closed-Cup Apparatus
ASTM D3335	(1985a; R 2014) Low Concentrations of Lead, Cadmium, and Cobalt in Paint by Atomic Absorption Spectroscopy
ASTM D3718	(1985a; R 2010) Low Concentrations of Chromium in Paint by Atomic Absorption Spectroscopy
ASTM D3925	(2002; R 2010) Sampling Liquid Paints and Related Pigmented Coatings
ASTM D3960	(2005; R 2013) Determining Volatile Organic Compound (VOC) Content of Paints and Related Coatings
ASTM D4285	(1983; R 2012) Indicating Oil or Water in Compressed Air
ASTM D4400	(1999; E 2012; R 2012) Sag Resistance of Paints Using a Multinotch Applicator
ASTM D4417	(2014) Field Measurement of Surface Profile of Blast Cleaned Steel
ASTM D4541	(2009; E 2010) Pull-Off Strength of Coatings Using Portable Adhesion Testers
ASTM D476	(2013) Dry Pigmentary Titanium Dioxide Pigments
ASTM D523	(2014) Standard Test Method for Specular Gloss
ASTM D56	(2005; R 2010) Flash Point by Tag Closed Cup Tester
ASTM D7127	(2013) Measurement of Surface Roughness of Abrasive Blast Cleaned Metal Surfaces using a Portable Stylus Instrument
ASTM D714	(2002; R 2009) Evaluating Degree of Blistering of Paints
ASTM D7334	(2008; R 2013) Standard Practice for Surface Wettability of Coatings, Substrates and Pigments by Advancing Contact Angle Measurement
ASTM D7588	(2011) Standard Guide for FT-IR Fingerprinting of a Non-Aqueous Liquid

	Paint as Supplied in the Manufacturer’s Container
ASTM D93	(2015) Flash-Point by Pensky-Martens Closed Cup Tester

INTERNATIONAL ORGANIZATION FOR STANDARDIZATION (ISO)

ISO 9001	(2008; Corr 1 2009) Quality Management Systems- Requirements

NACE INTERNATIONAL (NACE)

NACE SP0178	(2007) Design, Fabrication, and Surface Finish Practices for Tanks and Vessels to be for Immersion Service
NACE SP0188	(1999; R 2006) Discontinuity (Holiday) Testing of New Protective Coatings on Conductive Substrates
NACE TM0174	(2002) Laboratory Methods for the Evaluation of Protective Coatings and Lining Materials on Metallic Substrates in Immersion Service - Item No:21206

SOCIETY FOR PROTECTIVE COATINGS (SSPC)

SSPC 7/NACE No.4	(2007; E 2004) Brush-Off Blast Cleaning
SSPC AB 2	(1996; E 2004) Cleanliness of Recycled Ferrous Metallic Abrasive
SSPC AB 3	(2003; E 2004) Ferrous Metallic Abrasive
SSPC Guide 12	(1998; E 2004) Guide for Illumination of Industrial Painting Projects
SSPC PA 1	(2000; E 2004) Shop, Field, and Maintenance Painting of Steel
SSPC PA 2	(2015) Measurement of Dry Coating Thickness With Magnetic Gages
SSPC QP 1	(2012; E 2012) Standard Procedure for Evaluating Painting Contractors (Field Application to Complex Industrial Structures)
SSPC QP 5	(2012) Standard Procedure for Evaluating the Qualifications of Coating and Lining Inspection Companies
SSPC QS 1	(2004) Standard Procedure for Evaluating a Contractor's Advanced Quality Management System
SSPC SP 1	(1982; E 2004) Solvent Cleaning

SSPC SP 10/NACE No. 2	(2007) Near-White Blast Cleaning
SSPC SP COM	(2004) Surface Preparation Commentary for Steel and Concrete Substrates
SSPC VIS 1	(2002; E 2004) Guide and Reference Photographs for Steel Surfaces Prepared by Dry Abrasive Blast Cleaning

U.S. DEPARTMENT OF DEFENSE (DOD)

MIL-A-22262	(1993; Rev B; Am 2 1996) Abrasive Blasting Media Ship Hull Blast Cleaning

U.S. GENERAL SERVICES ADMINISTRATION (GSA)

FED-STD-595	(Rev C; Notice 1) Colors Used in Government Procurement

U.S. NATIONAL ARCHIVES AND RECORDS ADMINISTRATION (NARA)

29 CFR 1910.1000	Air Contaminants
29 CFR 1910.134	Respiratory Protection
29 CFR 1926.59	Hazard Communication

1.2 DEFINITIONS

Definitions are provided throughout this Section, generally in the paragraph where used, and denoted by capital letters. The following definitions are used throughout this Section:

a. CEILING - interior tank surfaces that extend from the horizontal plane at the designated maximum fuel line upward, including the upper portion of the tank shell (walls), columns, structural steel, the underside of the roof plates and other steel components in this area.

b. SHELL - interior tank surfaces that extend along the vertical tank walls between the horizontal planes approximately 1 meter above the shell to bottom joint upward to the horizontal plane at the designated fuel line, including columns, wall plates, and other steel components in this area.

c. FLOOR - interior tank surfaces below the horizontal plane approximately 1 meter above the shell to bottom joint, including columns, wall plates, piping, pipe supports, bottom plates, and other steel components in this area.

1.3 SUBMITTALS

Government approval is required for submittals with a "G" designation; submittals not having a "G" designation are for Contractor QC approval. Submittals with an "S" are for inclusion in the Sustainability Notebook, in conformance to Section 01 33 29, SUSTAINABITY REPORTING. Submit the following in accordance with Section 01 33 00 SUBMITTAL PROCEDURES:

SD-05, Design Data

Environmental Control System; G

SD-06 Test Reports

Coatings Qualification Inspection Reports; G

Metallic Abrasive Qualification Test Reports; G

Coating Sample Test Reports; G

Abrasive Sample Test Reports; G

Inspection Report Forms; G

Daily Inspection Reports; G

Recycled Metallic Abrasive Field Test Reports (Daily and Weekly); G

SD-07 Certificates

Contract Errors, Omissions, and Other Discrepancies; G

Corrective Action Procedures; G

Coating Work Plan; G

Qualifications of Certified Industrial Hygienist (CIH); G

Qualifications of Individuals Performing Abrasive Blasting; G

Qualifications of Individuals Applying Coatings; G

Qualifications of Individuals Operating Plural Component Equipment; G

Qualifications of Certified Protective Coatings Specialist (PCS); G

Qualifications of Coating Inspection Company; G

Qualifications of QC Specialist Coating Inspector; G

Qualifications of Testing Laboratory for Coatings; G

Qualifications of Testing Laboratory for Abrasive; G

Qualifications of Coating Contractors; G

Roof Joint Sealant Materials; G

Roof Joint Sealant Compatibility; G

Coating Materials; G

Non-metallic Abrasive; G

Metallic Abrasive; G

SD-08 Manufacturer's Instructions

Roof Joint Sealant Instructions; G

Coating System Instructions; G

SD-11 Closeout Submittals

Disposal of Used Abrasive; G

Inspection Logbook; G

1.4 QUALITY ASSURANCE

1.4.1 Contract Errors, Omissions, and Other Discrepancies

Submit all errors, omissions, and other discrepancies in contract documents to the Contracting Officer within 30 days of contract award for all work covered in this Section, other than the work that will not be uncovered until a later date. All such discrepancies must be addressed and resolved, and the Coating Work Plan modified, prior to beginning the Initial and Follow-Up phases of work. Discrepancies that become apparent only after work is uncovered must be identified at the earliest discoverable time and submitted for resolution. Schedule time (Float) should be built into the project schedule at those points where old work is to be uncovered or where access is not available during the first 30 days after award, to allow for resolution of contract discrepancies.

1.4.2 Corrective Action (CA)

CA must be included in the Quality Control Plan.

1.4.2.1 Corrective Action Procedures

Develop procedures for determining the root cause of each non-compliance, developing a plan to eliminate the root cause so that the non-compliance does not recur, and following up to ensure that the root cause was eliminated. Develop Corrective Action Request (CAR) forms for initiating CA, and for tracking and documenting each step.

1.4.2.2 Implement Corrective Action

The Contractor must take action to identify and eliminate the root cause of each non-compliance so as to prevent recurrence. These procedures must apply to non-compliance in the work, and to non-compliance in the QC System. Corrective actions must be appropriate to the effects of the non-compliance encountered. Each CAR must be serialized, tracked in a Log to completion and acceptance by the Contracting Officer, and retained in project records. The Corrective Action Log, showing status of each CAR, must be submitted to the Contracting Officer monthly. A CAR may be initiated by either the Contractor or the Contracting Officer. The Contracting Officer must approve each CAR at the root cause identification stage, the plan for elimination stage, and the close out stage after verification that the root cause has been eliminated.

1.4.3 Coating Work Plan

a. This work plan must be considered as part of the Quality Control Plan.

b. Provide procedures for reviewing contract documents immediately after award to identify errors, omissions, and discrepancies so that any such issues can be resolved prior to project planning and development of detailed procedures.

c. Provide procedures for verification of key processes during Initial Phase to ensure that contract requirements can be met. Key processes must include surface preparation, coating application and curing, inspection, and documentation, and any other process that might adversely impact orderly progression of work.

d. Provide procedures for all phases of coating operations, including planned work, rework, repair, inspection, and documentation. Address mobilization and setup, surface preparation, coating application, coating initial cure, tracking and correction of non-compliant work, and demobilization. Coordinate work processes with health and safety plans and confined space entry plans. For each process, provide procedures that include appropriate work instructions, material and equipment requirements, personnel qualifications, controls, and process verification procedures. Provide procedures for inspecting work to verify and document compliance with contract requirements, including inspection forms and checklists, and acceptance and rejection criteria.

e. Provide procedures for correcting non-compliant work. Detailed procedures are required in advance to avoid delays in meeting overcoat windows as well as to avoid delays in production. Provide procedures for repairing defects in the coating film, such as runs, drips, sags, holidays, overspray, as well as how to correct coating thickness non-compliance, any other areas of repair or rework that might be adversely affected by delays in preparing and approving new procedures.

f. If a procedure is based on a proposed or approved request for deviation, the deviation must be referenced. Changes to procedures must be noted by submittal number and date approved, clearly delineating old requirements and new requirements, so that the records provide a continuous log of requirements and procedures.

1.4.4 Design Data

1.4.4.1 Environmental Control System

Submit design details of the proposed environmental control system to include ventilation, humidity control, and temperature regulation. Provide calculations for humidity control during separate surface preparation and coating application procedures, ventilation requirements during coating application, and maximum allowable coating application rates to coincide with ventilation. Include basis of design data on local conditions. Provide equipment layout sketches and procedures showing function of each piece of equipment and fail-safe measures. A Certified Industrial Hygienist must approve calculations, work procedures and personal protective equipment.

1.4.5 Test Reports

1.4.5.1 Coatings Qualification Inspection Reports

Submit test results from independent laboratory for material required in paragraph COATING MATERIALS. Samples must have been tested within the last two years. Note that this testing is for the purpose of prequalifying the coating material.

1.4.5.2 Metallic Abrasive Qualification Test Reports

Submit results for abrasive as required in paragraph 4 REQUIREMENTS of SSPC AB 3. Submit test results from independent laboratory of representative samples of each abrasive to be used on the jobsite. Samples must have been tested within the last three years. Note that this testing is for the purpose of prequalifying the abrasive.

1.4.5.3 Recycled Metallic Abrasive Field Test Reports (Daily and Weekly)

Submit test results from independent laboratory of daily and weekly Quality Control testing required by SSPC AB 2, as modified in paragraph ABRASIVE.

1.4.6 Qualifications

1.4.6.1 Qualifications of Certified Industrial Hygienist (CIH)

Submit name, address, telephone number, FAX number, and e-mail address of the independent third party CIH. Submit documentation that hygienist is certified by the American Board of Industrial Hygiene in comprehensive practice, including certification number and date of certification/recertification. Provide evidence of experience with hazards involved in industrial coating application work.

1.4.6.2 Qualifications of Certified Protective Coatings Specialist (PCS)

Submit name, address, telephone number, FAX number, and e-mail address of the independent third party PCS. Submit documentation that the specialist is certified by SSPC: The Society for Protective Coatings (SSPC) as a PCS, including certification number and date of certification/recertification. If the PCS is employed by the same coating inspection company to which the coating inspector is employed, this does not violate the independent third-party requirements. The PCS must remain certified during the entire project, and the Contracting Officer must be notified of any change in certification status within 10 days of the change. The PCS must not be the designated coating inspector.

1.4.6.3 Qualifications of Coating Inspection Company

Submit documentation that the coating inspection company performing all coating inspection functions is certified by SSPC to the requirements of SSPC QP 5 prior to contract award. The coating inspection company submitted and approved must remain and not changed through completion of the contract. The coating inspection company must remain so certified for the duration of the coating work. If a coating inspection company's certification expires, the firm will not be allowed to perform any inspection functions, and all surface preparation and coating application work must stop, until the certification is reissued. Requests for extension of time for any delay to the completion of the project due to an

inactive certification will not be considered and liquidated damages will apply. Notify the Contracting Officer of any change in coating inspection company certification status. Notify the Contracting Officer of all scheduled and unannounced on site inspections from SSPC and furnish a copy of all inspection reports.

1.4.6.4 Qualifications of QC Specialist Coating Inspector

Submit documentation that each coating inspector is employed, and qualified to SSPC QP 5, Level III, by the selected coating inspection company. Each inspector must remain employed by the coating inspection company while performing any coating inspection functions. In addition to the handwritten records, the inspector must employ the electronic reporting program TruQC or equivalent as outlined in Table III. The Administrator must be the designated Government Representative for the project.

1.4.6.5 Qualifications of Individuals Performing Abrasive Blasting

Submit name, address, and telephone number of each person that will be performing abrasive blasting. Submit documentation that each blaster is qualified by SSPC to the SSPC CAS Coating Application Specialist Level 2 Certification Program (Interim Status). Each blaster must remain certified during the entire period of abrasive blasting, and the Contracting Officer must be notified of any change in qualification status. NOTE: Interim status will be acceptable up to 30 Sep 2017. After 30 Sep 2017 Full Status is required.

1.4.6.6 Qualifications of Individuals Applying Coatings

Submit name, address, and telephone number of each person that will be applying coatings. Submit documentation that each applicator is qualified by SSPC to the SSPC CAS Coating Application Specialist Level 2 Certification Program (Interim Status). Each applicator must remain certified during the entire period of coating application, and the Contracting Officer must be notified of any change in qualification status. NOTE: Interim status will be acceptable up to 30 Sep 2017. After 30 Sep 2017 Full Status is required.

1.4.6.7 Qualifications of Individuals Operating Plural Component Equipment

Submit name, address, and telephone number of each person that will be operating plural component equipment. Submit documentation that each operator is qualified by SSPC C 14 Marine Plural Component Program (MPCAC-C14). Each operator must remain certified during the entire period of coating application, and the Contracting Officer must be notified of any change in qualification status.

1.4.6.8 Qualifications of Testing Laboratory for Coatings

Submit name, address, telephone number, FAX number, and e-mail address of the independent third party laboratory selected to perform testing of coating samples for compliance with specification requirements. Submit documentation that laboratory is regularly engaged in testing of paint samples for conformance with specifications, and that employees performing testing are qualified.

1.4.6.9 Qualifications of Testing Laboratory for Abrasive

Submit name, address, telephone number, FAX number, and e-mail address of the independent third party laboratory selected to perform testing of abrasive for compliance with specification requirements. Submit documentation that laboratory has experience in testing samples of abrasive for conformance with specifications, and that employees performing testing are qualified.

1.4.6.10 Qualifications of Coating Contractors

All Contractors and Subcontractors that perform surface preparation or coating application must be certified to SSPC QP 1 and SSPC QS 1 prior to contract award, and must remain certified while accomplishing any surface preparation or coating application. The painting Contractors and painting Subcontractors must remain so certified for the duration of the project. If a Contractor's or Subcontractor's certification expires, the firm will not be allowed to perform any work until the certification is reissued. Requests for extension of time for any delay to the completion of the project due to an inactive certification will not be considered and liquidated damages will apply. Notify the Contracting Officer of any change in Contractor certification status. Notify the Contracting Officer of all scheduled and unannounced on site audits from SSPC and furnish a copy of all audit reports.

For OCONUS, non-US territories where documentation is provided that SSPC QP 1 and SSPC QS 1 certified contractors did not bid and are not available, all Contractors and Subcontractors that perform surface preparation or coating application must be certified to ISO 9001 prior to contract award, and must remain certified while accomplishing any surface preparation or coating application. The painting Contractors and painting Subcontractors must remain so certified for the duration of the project. If a Contractor's or Subcontractor's certification expires, the firm will not be allowed to perform any work until the certification is reissued. Requests for extension of time for any delay to the completion of the project due to an inactive certification will not be considered and liquidated damages will apply. Notify the Contracting Officer of any change in Contractor certification status. Notify the Contracting Officer of all scheduled and unannounced on site inspections from the ISO certifying organization and furnish a copy of all inspection reports.

1.4.6.11 Roof Joint Sealant Materials

Provide manufacturer's certification of conformance to contract requirements.

1.4.6.12 Roof Joint Sealant Compatibility

Provide manufacturer's certification that the selected joint sealant is compatible with the coating materials.

1.4.6.13 Coating Materials

Provide manufacturer's certification of conformance to contract requirements.

1.4.6.14 Non-metallic Abrasive

Provide manufacturer's certification that the materials are currently

approved by the Naval Sea Systems Command and listed on the Qualified Products List (QPL) for the specified materials.

1.4.6.15 Metallic Abrasive

Provide manufacturer's certification of conformance to contract requirements and provide copies of test results.

1.4.7 Protective Coating Specialist (PCS)

The PCS must be considered a QC Specialist and must report to the QC Manager, as specified in Section 01 45 00.00 20 QUALITY CONTROL. The PCS must approve all submittals prior to submission to the QC Manager for approval or submission to the government for approval.

1.4.8 Pre-Application Meeting

After approval of submittals but prior to the initiation of coating work, Contractor representatives, including at a minimum, project superintendent and QC manager, paint foreman, coating inspector, and PCS must have a pre-application coating preparatory meeting. This meeting must be in addition to the pre-construction conference. Specific items addressed must include: corrective action requirements and procedures, coating work plan, safety plan, coordination with other Sections, inspection standards, inspection requirements and tools, test procedures, environmental control system, safety plan, and test logs. Notify Contracting Officer at least ten days prior to meeting.

1.5 PRODUCT DATA

1.5.1 Roof Joint Sealant Instructions

Submit manufacturer's printed instructions including detailed mixing and application procedures, minimum and maximum application temperatures, and curing procedures. Include Materials Safety Data Sheets (MSDS) for materials to be used at the job site in accordance with 29 CFR 1926.59.

1.5.2 Coating System Instructions

Submit manufacturer's printed instructions including detailed mixing and application procedures, number and types of coats required, minimum and maximum application temperatures, and curing procedures. Include Materials Safety Data Sheets (MSDS) for materials to be used at the job site in accordance with 29 CFR 1926.59.

1.6 DELIVERY AND STORAGE

Ship, store, and handle materials in accordance with SSPC PA 1, and as modified in this Section. Maintain temperature in storage spaces between 5 and 29 degrees C, and air temperature more than 3 degrees C above the dew-point at all times. Inspect materials for damage prior to use and return non-compliant materials to manufacturer. Remove materials with expired shelf life from government property immediately and notify the Contracting Officer.

If materials are approaching shelf life expiration and an extension is desired, samples may be sent to the manufacturer, along with complete records of storage conditions, with a request for shelf life extension. If the manufacturer finds the samples and storage data suitable for shelf

life extension, the manufacturer may issue an extension, referencing the product evaluation and the review of storage records.

1.7 COATING HAZARDS

Ensure that employees are trained in all aspects of the safety plan. Specified coatings may have potential health hazards if ingested or improperly handled. The coating manufacturer's written safety precautions must be followed throughout mixing, application, and curing of the coatings. During tank cleaning, cleanup, surface preparation, and paint application phases, ensure that employees are protected from toxic and hazardous chemical agents which exceed concentrations in 29 CFR 1910.1000. Comply with respiratory protection requirements in 29 CFR 1910.134. The CIH must approve work procedures and personal protective equipment.

1.8 WORK SEQUENCE

Coat tank interior following tank tightness testing.

1.9 JOB SITE REFERENCES

Make available to the Contracting Officer at least one copy each of API Std 653, ASTM D3276, ASTM D3925, ASTM D4285, ASTM D7127, NACE SP0178 and companion visual comparator, NACE SP0188, SSPC SP COM, SSPC SP 1, SSPC 7/NACE No.4, SSPC SP 10/NACE No. 2, SSPC PA 1, SSPC PA 2, SSPC Guide 12, SSPC VIS 1, SSPC CAS, SSPC C 14, SSPC QP 1, SSPC QS 1, and an SSPC Certified Contractor Evaluation Form where applicable (ISO 9001 where applicable) at the job site.

PART 2 PRODUCTS

2.1 ROOF JOINT SEALANT

Industrial grade, two component, minimum 95 percent solids by volume, polysulfide type caulking material that has a minimum history of 10 years acceptable service in fuel tanks. Sealant must be compatible with the coating and suitable for direct application to prepared steel surfaces. Sealant must contain no more than 0.06 percent by dry weight Lead, no more than 0.06 percent by dry weight Cadmium, and no more than 0.00 percent by dry weight Chromium.

2.2 COATING SYSTEM

Alternate systems or products will not be considered. All coating materials must be supplied by one supplier. The entire coating system is intended to be applied in the field. Alternatively, surface preparation may be accomplished in the shop, following all temperature, humidity, and testing requirements listed herein, followed by an application of a hold-primer. Upon completion of field fabrication, all shop-applied coatings must be removed, surfaces prepared to SSPC SP 10/NACE No. 2, and the specified coating system applied. Adjust all shop preparation to avoid conflicts with final surface preparation requirements.

2.2.1 Coating Materials

Modified epoxy novolac polysulfide coating materials complying with Table I and Table II. The first and finish coat materials are identical except that the coats must be in contrasting colors to allow identification. Note that the qualification testing requires immersion testing for six

months.

2.3 COATING SAMPLE COLLECTION AND SHIPPING KIT

Provide a kit that contains one liter can for the base of each coating material, an appropriately sized can for each activator, dipping cups for each component to be sampled, a shipping box sized for the samples to to be shipped, and packing material. Mark cans for the appropriate component. Provide shipping documents, including either pre-paid shipping or a shipper number that can be used by the QC Manager to arrange pickup, addressed to the approved coating testing laboratory.

2.4 ABRASIVE SAMPLE COLLECTION AND SHIPPING KIT

Provide a kit that contains one suitable plastic bag or container for each sample to be collected. Mark containers for the appropriate component. Provide shipping documents, including either pre-paid shipping or a shipper number that can be used by the QC Manager to arrange pickup, addressed to the approved coating testing laboratory.

2.5 TEST KITS

2.5.1 Test Kit for Measuring Chloride, Sulfate and Nitrate Ions on Steel and Coated Surfaces

Provide test kits called CHLOR*TEST CSN Salts, as manufactured by CHLOR*RID International Inc. of Chandler, Arizona (www.chlor-rid.com) or equal. An "equal" test kit must meet the following requirements:

a. Kit contains all materials,supplies, tools and instructions for field testing and on-site quantitative evaluation of chloride, sulfate and nitrate ions;

b. Kit extract solution is acidic, factory pre-measured, pre-packaged, and of uniform concentration;

c. Kit components and solutions are mercury free and environmentally friendly;

d. Kit contains new materials and solutions for each test extraction;

e. Extraction test container (vessel, sleeve, cell) creates a sealed, encapsulated environment during salt ion extraction;

f. Test extract container is suitable for testing the following steel surfaces: horizontal (up/down configuration), vertical, flat, curved, smooth, pitted, and rough;

g. All salt ion concentrations are directly measured in micrograms per square centimeter.

2.5.2 Test Kit for Identifying Amine Blush on Epoxy Surfaces

Test kit must meet the following requirements:

a. Be a completely self-contained field test kit with all materials, supplies, tools and instructions to perform tests and indicate the presence of unreacted amines;

b. Use an identifiable, consistent, uniform, pre-packaged, factory pre-measured indicating solution;

c. Kit contains no mercury or lead and is environmentally friendly;

d. Kit contains a solution of an unreacted amine for the purpose of "self checking" the indicator solution;

2.6 ABRASIVE

The referenced abrasive specifications have maximum limits for soluble salts contamination, however, this maximum level of contamination does not guarantee that contamination will not be transferred to the steel surface during abrasive blasting. Other factors such as on-site handling and recycling can allow contamination of abrasive. Contractors are cautioned to verify that the chosen abrasive, along with work and storage processes, allow the final surface cleanliness requirements to be achieved. Successful testing of chlorides in abrasive does not negate the final acceptance testing of steel surfaces.

2.6.1 Non-metallic Abrasive

Conform to MIL-A-22262, Type I (Inorganic materials) except that the gross gamma radioactivity must not exceed 5 picocuries per gram. Abrasive must be approved by the Naval Sea Systems Command and listed on the appropriate Qualified Products List (QPL) for the specified materials. Use sampling procedures and testing frequencies as prescribed in MIL-A-22262. Use abrasive that is specifically selected and graded to provide a sharp, angular profile to the specified depth. Do not use ungraded abrasive. Make adjustments to processes or abrasive gradation to achieve specified surface profile. Recycled non-metallic abrasive must meet all requirements of the specification each time that it is placed in the blast pot.

2.6.2 Metallic Abrasive

2.6.2.1 New and Remanufactured Steel Grit

Conform to the chemical and physical properties of SSPC AB 3 Class 1 (Steel) only, except that the gross gamma radioactivity must not exceed 5 picocuries per gram. Class 2 (Iron) abrasive must not be used.

To develop a suitable work mix from new steel abrasive, a minimum of 200 to 400 recycles is required, therefore, it is advantageous for a Contractor to use remanufactured steel grit or grit reclaimed from a previous project. Such grit must be considered to conform if it can be traced to new grit conforming to SSPC AB 3 Class 1 and it meets all cleanliness requirements of SSPC AB 3 Class 1 when brought to the current jobsite. Submit one representative sample of this work mix to the laboratory for testing, along with samples of new material. Acceptance and use of this work mix must not be used to justify any deviation from surface preparation requirements.

2.6.2.2 Recycled Steel Grit

Conform to the chemical and physical properties of SSPC AB 2

PART 3 EXECUTION

Perform all work, rework, and repair in accordance with approved procedures in the Coating Work Plan.

3.1 COATING AND ABRASIVE SAMPLE COLLECTION AND TESTING

Sample and test materials delivered to the jobsite. Notify Contracting Officer three days in advance of sampling. The QC Manager, and either the PCS or coating inspector, must witness all sampling.

3.1.1 Coating Sample Collection

Provide a sample collection kit as required in paragraph COATING SAMPLE COLLECTION AND SHIPPING KIT. From each lot, obtain a one liter sample of each base material, and proportional samples of each activator based on mix ratio, by random selection from sealed containers in accordance with ASTM D3925. Prior to sampling, mix contents of each sealed container to ensure uniformity. As an alternative to collecting small samples from kits, entire kits may be randomly selected and shipped to laboratory, observing all requirements for witnessing and traceability. For purposes of quality conformance inspection, a lot is defined as that quantity of materials from a single, uniform batch produced and offered for delivery at one time. A batch is defined as that quantity of material processed by the manufacturer at one time and identified by number on the label. Identify samples by designated name, specification number, batch number, project contract number, sample date, intended use, and quantity involved. The QC Manager will take possession of the packaged samples, contact the shipping company to arrange for pickup, and relinquish the samples only to the shipping representative for shipment to the approved laboratory for testing as required by paragraph COATING SAMPLE TEST REPORTS.

3.1.2 Abrasive Sample Collection

Provide a sample collection kit as required in paragraph ABRASIVE SAMPLE COLLECTION AND SHIPPING KIT. For purposes of quality conformance inspection, a lot must consist of all abrasive materials of the same type from a single, uniform batch produced and offered for delivery at one time. Obtain samples of each abrasive lot using the sampling techniques and schedule of MIL-A-22262. The addition of any substance to a batch must constitute a new lot. Identify samples by designated name, specification number, lot number, project contract number, sample date, intended use, and quantity involved. The QC Manager will take possession of the packaged samples, contact the shipping company to arrange for pickup, and relinquish the samples only to the shipping representative for shipment to the approved laboratory for testing as required by paragraph ABRASIVE SAMPLE TEST REPORTS.

3.1.3 Coating Sample Test Reports

Submit test results for each lot of coating material delivered to the jobsite. Test samples of coating material for compliance with requirements of Table I. Reject entire batch represented by samples that fail one or more tests, select new lots, and test samples.

3.1.4 Abrasive Sample Test Reports

Submit test results for each lot of abrasive delivered to the jobsite.

Test samples of metallic abrasive to the requirements of paragraph REQUIREMENTS of SSPC AB 3, except paragraph 4.1.5 DURABILITY. Test samples of non-metallic abrasive as required in paragraph QUALITY CONFORMANCE INSPECTION of MIL-A-22262. Reject entire lot represented by samples that fail one or more tests, select new lots, and test samples.

3.2 LIGHTING

Provide lighting for all work areas as prescribed in SSPC Guide 12.

3.3 ENVIRONMENTAL CONDITIONS

3.3.1 Tank Containment

Maintain exterior tank containment in full working condition during interior surface preparation, coating application, and initial curing to aid in maintaining interior environmental conditions.

3.3.2 Control System Requirements

Provide and utilize dehumidification and ventilation equipment to control humidity, temperature, and vapor levels in tank from beginning of abrasive blasting through coating application and for 16 hours after the last coating is applied. System must maintain vapor concentrations at or below 10 percent of Lower Explosive Limit (LEL). System may incorporate any combination of solid desiccant and direct expansion refrigeration equipment. No liquid, granular, calcium chloride, or lithium chloride drying systems will be accepted. Use only electric, indirect fired combustion, indirect friction, or steam coil auxiliary heaters. System must be compatible with removal of dust and solvent vapors, and must have fail-safe measures to ensure reliability during operations.

3.3.3 Automated Monitoring Requirements

Provide continuous monitoring of DH equipment, and temperature, relative humidity, and dew point data at pertinent points on the structure, during surface preparation, coating application, and initial cure. This data does not suffice for documentation of conformity to surface conditions during application and cure of coating. Locate sensors to provide pertinent data for the surface preparation and coat application being performed, as well as the temperature extremes on the structure. Describe the location plan, including required moves, in the Work Plan. Make data available to the Contracting Officer through Internet access. Provide monitoring equipment to perform as follows:

a. Data is collected in the field unit in one minute increments, and available for download (on-site) in a standard format. Contractor must collect this data and make available to the Contracting Officer;

b. Monitoring equipment must have backup power such that data collection and transmission to web server will be uninterrupted during the entire period of the dehumidification requirement;

c. Monitoring equipment must have capability to measure surface temperatures at a minimum of four locations anywhere on a structure, regardless of size of structure;

d. Monitoring equipment must have capability to measure interior and

exterior dry bulb temperature (DB), relative humidity (RH), and dewpoint temperature (DP);

e. Data must be available continuously through secure Internet connection, using widely available web browsers;

f. Internet accessible data must be collected and stored in maximum 15 minute increments, and lag time between data collection and online availability must be no greater than 70 minutes;

g. Internet accessible data must be available for viewing online in tabular format, and graphical format using selected data;

h. Internet accessible data must be available for download in user-defined segments, or entire project to date, in a standard format usable by Microsoft Excel and other spreadsheet programs.

i. Internet-based controls must provide alerts to pre-designated parties through email messaging;

j. Internet-based controls must monitor data uploads from field unit and issue alert if data not initiated within 60 minutes of last upload;

k. Internet-based controls must monitor operation of DH equipment and issues alert when power remains off for more than 15 minutes, or if pre-determined temperature, RH, or DP conditions are exceeded;

There is no requirement for connectivity of the monitoring system to control the DH equipment, therefore, any combination of equipment having the required functionality will be accepted.

3.3.4 Humidity Control for Surface Preparation and First Coat Application

Provide and utilize dehumidification equipment to maintain relative humidity at appropriate level to prevent prepared steel surfaces from corroding at all times during abrasive blasting through coating application. Failure of humidity control system, or failure to maintain proper conditions, during surface preparation stage may allow surface rusting, which will be rejected and require rework. All surfaces to be coated must meet all requirements at time of coating application. Failure of humidity control system during coating application stage will be cause for removal and replacement of all materials applied and cured while conditions were not as prescribed above.

Note that reduction of relative humidity below approximately 25 percent may affect application and curing characteristics. Contact coating manufacturer for appropriate limitations on lower relative humidity levels.

3.3.5 Humidity Control for Application of Finish Coat and Initial Curing

Provide and utilize dehumidification equipment to maintain relative humidity at the coldest steel surface in tank below 55 percent at all times during coating application, and initial curing. This measurement is not the same as measuring the relative humidity of ambient air in the tank, and will require either electronic equipment to monitor relative humidity at the steel surface, or complex calculations to convert relative humidity of air in tank to relative humidity at steel surface. An approved alternative method of monitoring dehumidification that requires less sophisticated equipment or calculations is to maintain a minimum dew

point depression of 10 degrees C below coldest steel surface temperature. This is in lieu of specific relative humidity and dew point requirements in this Section. Failure to maintain specified humidity control during application may cause formation of condensation during the coating application stages prior to the indicated dry-hard period and will be cause for removal and replacement of all materials contacted by condensation.

3.4 EQUIPMENT USED IN TANK

Equipment used in the tank after surface preparation begins must not leave any oily residue from exhaust or other sources. Internal combustion driven equipment, other than that powered by natural or bottled gas, must not be used.

3.5 SURFACES TO BE COATED

Prepare and coat interior tank surfaces, including FLOOR, SHELL, and CEILING. Remove interior piping to ensure complete coverage of floor and underside of pipe supports.

3.6 SURFACE PREPARATION

3.6.1 Abrasive Blasting Equipment

Use abrasive blasting equipment of conventional air, force-feed, or pressure type. Maintain a minimum pressure of 650 kPa at nozzle. Confirm that air supply for abrasive blasting is free of oil and moisture when tested in accordance with ASTM D4285. Test air quality at each startup, but in no case less often than every five operating hours.

3.6.2 Operational Evaluation of Abrasive

Test abrasive for salt contamination and oil contamination as required by the appropriate abrasive specification daily at startup and every five operating hours thereafter.

3.6.3 Surface Standard

Inspect surfaces to be coated, and select plate with similar properties and surface characteristics for use as a surface standard. Blast clean one or more 300 mm square steel panels as specified in paragraph SURFACE PREPARATION. Record blast nozzle type and size, air pressure at nozzle and compressor, distance of nozzle from panel, and angle of blast to establish procedures for blast cleaning. Measure surface profile in accordance with ASTM D7127. When the surface standard complies with all specified requirements, seal with a clearcoat protectant. Use the surface standard for comparison to abrasive blasted surfaces throughout the course of work.

3.6.4 Pre-Preparation Testing for Surface Contamination

Perform testing, abrasive blasting, and testing in the prescribed order.

3.6.4.1 Pre-Preparation Testing for Oil and Grease Contamination

a. Inspect all surfaces for oil and grease contamination using two or more of the following inspection techniques: 1) Visual inspection, 2) WATER BREAK TEST, 3) BLACK LIGHT TEST, and 4) CLOTH RUB TEST.

Reject oil or grease contaminated surfaces, clean using a water based pH neutral degreaser in accordance with SSPC SP 1, and recheck for contamination until surfaces are free of oil and grease.

b. WATER BREAK TEST - Spray atomized mist of distilled water onto surface, and observe for water beading. If water "wets" surface rather than beading up, surface can be considered free of oil or grease contamination. Beading of water (water forms droplets) is evidence of oil or grease contamination.

c. BLACK LIGHT TEST - Inspect surfaces for oil and grease contamination using the light specified in paragraph BLACK LIGHT. Use light no more than 381 mm from surface unless testing indicates that the specific oil or grease found in tank fluoresce at a greater distance. Use light in tank that is completely sealed from light infiltration, under a hood, or at night. Any fluorescing on steel surfaces is indication of petroleum oil/grease contamination. Use either WATER BREAK TEST or CLOTH RUB TEST to confirm both contaminated and non-contaminated areas detected by BLACK LIGHT TEST. The BLACK LIGHT TEST may not be used during inspection of prepared surfaces for oil and grease contamination unless proven to fluoresce the oil and grease found in the specific tank and documented during testing prior to abrasive blasting. Generally, only petroleum oil/grease will fluoresce, however, some may not fluoresce sufficiently to be recognized and other methods, such as the WATER BREAK TEST or CLOTH RUB TEST, must be used to confirm findings of the BLACK LIGHT TEST.

d. CLOTH RUB TEST - Rub a clean, white, lint free, cotton cloth onto surface and observe for discoloration. To confirm oil or grease contamination in lightly stained areas, a non-staining solvent may be used to aid in oil or grease extraction. Any visible discoloration is evidence of oil or grease contamination.

3.6.4.2 Pre-Preparation Testing for Soluble Salts Contamination

Test surfaces for soluble salts, and wash as required, prior to abrasive blasting. Soluble salt testing is also required in paragraph PRE-APPLICATION TESTING FOR SOLUBLE SALTS CONTAMINATION as a final acceptance test of prepared surfaces after abrasive blasting, and successful completion of this phase does not negate that requirement. This phase is recommended since pre-preparation testing and washing are generally more advantageous than attempting to remove soluble salt contamination after abrasive blasting. Effective removal of soluble salts will require removal of any barrier to the steel surface, including rust. This procedure may necessitate combinations of wet abrasive blasting, high pressure water rinsing, and cleaning using a solution of water washing and soluble salts remover. The soluble salts remover must be acidic, biodegradable, nontoxic, noncorrosive, and after application, will not interfere with coating adhesion. Delays between testing and preparation, or testing and coating application, may allow for the formation of new contamination. Use potable water, or potable water modified with a soluble salt remover, for all washing or wet abrasive blasting. Test methods and equipment used in this phase are selected at the Contractor's discretion.

3.6.5 Abrasive Blasting

a. Prepare steel surfacs in accordance with SSPC PA 1 and as specified herein.

b. On new surfaces abrasive blast steel surfaces to near-white metal in accordance with SSPC SP 10/NACE No. 2. Prepared surfaces must conform to SSPC VIS 1 and must match the prepared test-panels. Provide a 50 to 75 micron surface profile. Reject profile greater than 75 microns, discontinue abrasive blasting, and modify processes and materials to provide the specified profile. Measure surface profile in accordance with ASTM D7127, using Rmax as the measure of profile height. Record all measurements required in this standard. Measure profile at rate of three test areas for the first 100 square meters plus one test area for each additional 100 square meters or part thereof. When surfaces are reblasted for any reason, retest profile as specified. Following abrasive blasting, remove dust and debris by vacuum cleaning. Do not attempt to wipe surface clean.

c. On previously coated and prepared surfaces determine and establish the average blast profile existing. If existing blast profile is greater than the required 75 microns established for new surfaces this average profile must be reported and a mutual agreement by the government and contractor at the pre-application meeting must be detemined to not increase the existing profile. Abrasive blast the steel surfaces to near-white metal in accordance with SSPC SP 10/NACE No. 2 using abrasive and technique which does notincrease the existing profile. Provide a minimum 75 microns surface profile but no additional profile than that existing. Reject profile greater than existing, discontinue abrasive blasting, and modify processes and materials to provide the specified agreed existing profile. Prepared surfaces must conform to SSPC VIS 1 and must match the prepared test-panels. Measure surface profile in accordance with ASTM D4417 or ASTM D7127, using Rmax as the measure of profile height. Record all measurements required in this standard. Measure profile at rate of three test areas for the first 100 square meters plus one test area for each additional 100 square meters or part thereof. Provide two additional measurements for each non-compliant measurement. When surfaces are reblasted for any reason, retest profile as specified. Following abrasive blasting, remove dust and debris by vacuum cleaning. Do not attempt to wipe surface clean.

3.6.6 Disposal of Used Abrasive

Dispose of used abrasive off Government property in accordance with Federal, State and Local mandated regulations.

3.6.7 Pre-Application Testing For Surface Contamination

3.6.7.1 Pre-Application Testing for Oil and Grease Contamination

Ensure tank surfaces are free of contamination as described in paragraph PRE-PREPARATION TESTING FOR OIL AND GREASE CONTAMINATION.

3.6.7.2 Pre-Application Testing for Soluble Salts Contamination

Test surfaces for chloride contamination using the Test Kit described in

paragraph TEST KIT FOR MEASURING CHLORIDE, SULFATE AND NITRATE IONS ON STEEL SURFACES. Test all surfaces at rate of three tests for the first 100 square meters plus one test for each additional 200 square meters or part thereof. Perform 30 percent of tests on bare steel at welds, divided equally between horizontal and vertical welds. One or more readings greater than nondetectable for chlorides, sulfates, or nitrates is evidence of soluble salt contamination. Reject contaminated surfaces, wash as discussed in paragraph PRE-PREPARATION TESTING FOR SOLUBLE SALTS CONTAMINATION, allow to dry, and re-test until all required tests show allowable results. Reblast tested areas using vacuum equipped blast equipment. Label all test tubes and retain for test verification.

3.6.7.3 Pre-Application Testing for Surface Cleanliness

Apply coatings to dust free surfaces. To test surfaces, apply strip of 3M Scotch Magic Tape #810 to surface and rub with fingernail or rounded object until clear. Remove tape and apply to white paper. The tape should show little or no dust, blast abrasive, or other contaminant. Reject contaminated surfaces, clean by vacuum cleaning, and retest. Test surfaces at rate of three tests for the first 100 square meters plus one test for each additional 100 square meters or part thereof. Provide two additional tests for each failed test or questionable test. Attach test tapes to Daily Inspection Reports.

3.7 MIXING AND APPLICATION OF ROOF JOINT SEALANT AND COATING SYSTEM

Mix and apply in accordance with approved procedures, which may differ for each product. Do not mix partial kits or alter mix ratios.

3.7.1 Mixing Roof Joint Sealant and Coating Materials

Each of the products are a two-component material supplied in separate containers. Mix materials in same temperature and humidity conditions specified in paragraph DELIVERY AND STORAGE. Allow mixed material to stand for the required induction time.

3.7.1.1 Pot Life

Apply mixed products within stated pot life for each product. Stop applying when material becomes difficult to apply in a smooth, uniform wet film. Pot life is based on standard conditions at 21 degrees C and 50 percent relative humidity. For every 10 degrees C rise in temperature, pot life is reduced by approximately half, and for every 10 degrees C drop, it is approximately doubled. Usable pot life depends on the temperature of the material at the time of mixing and the sustained temperature at the time of application. Other factors such as the shape of the container and volume of mixed material may also affect pot life. In hot climates, precooling or exterior icing of components for at least 24 hours to a minimum of 10 degrees C will extend pot life.

3.7.1.2 Application Conditions and Recoat Windows

a. The application condition requirements for the coating system are time and temperature sensitive, and are intended to avoid the delamination problems frequently found on industrial structures. Plan coating application to ensure that specified temperature, humidity, and condensation conditions are met. If conditions do not allow for orderly application of sealant and coating materials, use appropriate means of controlling air and surface

temperatures, as required. Partial or total enclosures, insulation, heating or cooling, or other appropriate measures may be required to control conditions to allow for orderly application of all required coats.

b. Maintain air and steel surface temperature between 16 and 48 degrees C during application and the first four hours of cure.

c. Use Table entitled RECOAT WINDOWS to determine appropriate recoat windows for each coat after the initial coat. Apply each coat during appropriate RECOAT WINDOW of preceding coat. If a RECOAT WINDOW is missed, the minimum and maximum finish coat thickness may be adjusted to accommodate the total film thickness requirement, however, requirements for total coating thickness will not be modified. Missing more than one RECOAT WINDOWS may require complete removal of coating if maximum total coating thickness requirements cannot be achieved.

d. If coating is not applied during RECOAT WINDOW, or if surface temperature exceeds 49 degrees C between applications, provide GLOSS REMOVAL, apply next coat within 24 hours. If next planned coat is finish coat, apply additional material to achieve the minimum and maximum total coating thickness requirement. Sanding or abrasive marks from GLOSS REMOVAL reflecting through finish coat will be considered as non-compliant. Apply finish coat within 24 hours of GLOSS REMOVAL.

RECOAT WINDOWS						
Temperature degrees C	16-21	22-27	28-32	33-38	39-43	44-49

All coats

RECOAT WINDOW (Hrs.)	36-336	36-240	24-168	24-96	16-48	16-48

The temperature ranges shown in the table above are for determining recoat windows. Choose recoat window based on the highest surface temperature that was sustained for one or more hours between coats. This applies to the entire time between coats. Measure and record air and surface temperatures on hourly basis to determine appropriate recoat windows. If surface temperature goes above 38 degrees C, measure and record temperatures every half hour.

GLOSS REMOVAL - Where required, hand sand in a linear fashion to remove gloss using 120-200 grit wet/dry sandpaper, vacuum-remove all dust, and solvent wipe with a clean rag soaked with denatured alcohol. GLOSS REMOVAL of the first coat is to scarify the surface and must consist of removal of approximately 75-100 microns of coating. If steel is exposed during GLOSS REMOVAL, repair in accordance with paragraph PROCEDURE FOR HOLIDAY AND SPOT REPAIRS OF NEWLY APPLIED COATING. GLOSS REMOVAL of the first coat is to scarify the surface completely and may include removal of up to 250 microns of coating to avoid excess thickness.

3.7.2 Amine Blush Testing of Coating Prior to Overcoating

Test coating surfaces prior to application of any subsequent coat, for amine blush contamination using the Test Kit described in paragraph TEST KIT FOR IDENTIFYING AMINE BLUSH ON EPOXY SURFACES. Test all surfaces at a rate of three tests for the first 100 square meters plus one test for each additional 200 square meters or part thereof. If one or more tests show positive results for amine blush contamination, either treat all surfaces using the approved amine blush removal procedure or increase testing to ensure that all contamination is located, and then treat identified contamination using the approved procedure.

3.7.3 Application of Coating System and Roof Joint Sealant

a. Apply coatings in accordance with SSPC PA 1 and as specified herein. Apply sealant and coatings to surfaces that meet all stated surface preparation requirements.

b. After surface preparation and prior to application of each subsequent coat, perform testing prescribed in paragraph PRE-APPLICATION TESTING FOR SURFACE CONTAMINATION, as necessary, to ensure minimal intercoat contamination. This testing may be reduced to one half of the prescribed rate for bare steel if the testing indicates no contamination when sampling is evenly distributed over surfaces being tested. If contamination is found between coats, revert to the specified testing rate. Generally, oil and grease contamination and soluble salts contamination are not encountered if subsequent coats are applied within specified recoat windows and the quality of air entering tank is controlled. Concern for intercoat contamination should be continually prevalent, and spot testing should be accomplished to verify satisfactory conditions. Where visual examination or spot testing indicates contamination, perform sufficient testing to verify non-contamination, or to define extent of contamination for appropriate treatment.

c. Apply each coat in a consistent wet film, at 90 degrees to previous coat. Ensure that coating "cold joints" are no less than 150 mm from welds. Apply stripe coat by brush. For convenience, stripe coat material may be delivered by spray if followed immediately with brush-out and approved procedures include appropriate controls on thickness. Apply all other coats by spray application. Use appropriate controls to prevent airborne coating fog from drifting beyond 3 meters from the tank perimeter. The cleanliness, temperature, recoat windows, and airborne paint containment requirements may necessitate the use of portable shelters or other appropriate controls.

Apply coatings at the following specified thickness:

Coat	Minimum DFT (Microns)	Maximum DFT (Microns)
Stripe Coat (not included in total)	125	200

Coat	Minimum DFT (Microns)	Maximum DFT (Microns)
First coat	300	375
Finish coat	300	375
Total system	600	750

Measure coating thickness in accordance with SSPC PA 2 to confirm that coating application is within the specified range and within the tolerances of that standard. For non-compliant areas, increase number of test areas to identify all non-compliant application as required by SSPC PA 2.

3.7.3.1 Application of Roof Joint Sealant

Apply sealant to the roof-to-shell joint, to all roof plate lap joints, and to roof-to-rafter joints up to 25 mm gap to exclude moisture from these marginally prepared crevice areas. Allow sealant to cure according to manufacturer's instructions prior to application of the stripe coat.

3.7.3.2 Application of Stripe Coat

Apply stripe coat of finish coat material within RECOAT WINDOW of roof joint sealant. Apply stripe coat by brush, working the material into corners, crevices, pitted areas, and welds, and onto outside corners and angles. Where roof-to-rafter joints exceed 25 mm gap and roof joint sealant was not applied, use appropriate application tools to provide "best effort" coating of all exposed steel surfaces in the gap. Mini-rollers or other tools may be required.

3.7.3.3 Application of First Coat

Apply first coat to all bare surfaces and stripe coat areas within RECOAT WINDOW of stripe coat.

3.7.3.4 Application of Finish Coat

Make all required repairs to first coat as specified in paragraph PROCEDURE FOR HOLIDAY AND SPOT REPAIRS OF NEWLY APPLIED COATING prior to applying finish coat. Apply finish coat within RECOAT WINDOW of first coat. Touch-up blemishes and defects within recoat window of finish coat.

3.7.4 Holiday Testing

No sooner than 24 hours after application of the first coat, and normally 36 hours, perform holiday testing in accordance with the low voltage wet sponge method of NACE SP0188, with no added surfactants. Repair holidays per paragraph PROCEDURE FOR HOLIDAY AND SPOT REPAIRS OF NEWLY APPLIED COATING. Do not allow moisture from sponge to remain on the coated surfaces more than ten minutes. Remove excess moisture with a clean rag.

3.7.5 Procedure for Holiday and Spot Repairs of Newly Applied Coating

Repair coating film defects at the earliest practicable time, and before application of the succeeding coat. Any Holiday found should have a coat

brush applied in the area prior to application of the finish coat. Observe all requirements for soluble salts contamination, cleanliness between coats, and application conditions. Any signs of steel corrosion must be prepared in accordance with SSPC SP 10/NACE No. 2, to leave 150 mm of each succeeding coat feathered and abraded. Protect adjacent areas from damage and overspray. Remove dust and solvent wipe the prepared area plus any additional 150 mm beyond the prepared area with clean denatured alcohol. Apply each coat within RECOAT WINDOW of preceeding coat. Apply first coat to prepared steel within four hours of preparation and feather onto prepared coating. Apply each repair coat to approximate thickness of surrounding coating system.

3.7.6 Tank Occupancy After Coating Application

Verify the coating has reached a cured state that will allow foot traffic. Use clean canvas, or other approved, shoe covers when walking on coated surfaces, regardless of curing time allowed. Provide cushioned mats for all traffic areas.

3.7.7 Extended Cure of Coating System Prior to Immersion Service

Allow a cure time of at least 14 days after the final coating material has been applied before introducing water or fuel into tank.

3.8 PROJECT IDENTIFICATION

At the completion of the tank work, stencil the following information on the exterior of the tank adjacent to the main manway opening in 3/4 to one inch Helvetica style letters of contrasting color using acrylic stencil paint:

Date Interior Coated:
Project Number:
Contractor:
Address:
Coating System
  Surface Prep: SSPC SP __ Profile: ____
  First Coat: _____ Thickness: ____
  Finish Coat: _____ Thickness: ____
  Total Thickness: ____

3.9 FIELD QUALITY CONTROL

Project documentation, including inspection and testing records, must be used to determine the Contractor's compliance with contract requirements and approved procedures. The Contractor's certifications of completion, for both invoices and for project completion, must be based on documented evidence of compliance with all requirements and approved Coating Work Plan procedures. Track inspections and tests in the Test Plan & Log.

3.9.1 Coating Inspector

The coating inspector must be considered a QC Specialist and must report to the QC Manager, as specified in Section 01 45 00.00 20 QUALITY CONTROL. The Coating Inspector must be present during all pre-preparation testing, surface preparation, coating application, initial cure of the coating system, during all coating repair work, and during completion activities as specified in Section 01 45 00.00 20 QUALITY CONTROL. The Coating Inspector must provide complete documentation of conditions and

occurrences on the job site, and be aware of conditions and occurrences that are potentially detrimental to the coating system. The requirements for inspection listed in this Section are in addition to the QC inspection and reporting requirements specified in Section 01 45 00.00 20 QUALITY CONTROL.

3.9.2 Field Inspection

3.9.2.1 Inspection and Documentation Requirements

a. Perform field inspection in accordance with ASTM D3276 and the approved Coating Work Plan. Document Contractor's compliance with the approved Coating Work Plan.

b. Provide all tools and instruments required to perform the required testing, as well as any tools or instruments that the inspector considers necessary to perform the required inspections and tests. Document each inspection and test, including required hold points and other required inspections and tests, as well as those inspections and tests deemed prudent from on-site evaluation to document a particular process or condition, as follows:

   (1) Location or area;
   (2) Purpose (required or special);
   (3) Method;
   (4) Criteria for evaluation;
   (5) Results;
   (6) Determination of compliance;
   (7) List of required rework;
   (8) Observations.

c. Collect and record Environmental Conditions as described in ASTM D3276 on a 24 hour basis, as follows:

   (1) During surface preparation, every hour or when changes occur;
   (2) During coating application and the first four days of initial cure, every hour or when changes occur;
   (3) Note location, time, and temperature of the highest and lowest surface temperatures each day;
   (4) Use a non-contact thermometer to locate temperature extremes, then verify with contact thermometers.

d. NOTE: Data collected on Environmental conditions in paragraph AUTOMATED MONITORING REQUIREMENTS may be used for overnight data, however, the data must be constantly verified as to location of sensors and validity of data with respect to the coating work being accomplished.

e. Document all equipment used in inspections and testing, including manufacturer, model number, serial number, last calibration date and future calibration date, and results of on-site calibration performed. Work documented using data from equipment found to be out of calibration must be considered as non-compliant since last calibration or calibration check, as required.

3.9.2.2 Inspection Report Forms

Develop project-specific report forms as required to report measurement and test results and observations being complete and compliant with

contract requirements. This includes all direct requirements of the contract documents and indirect requirements of referenced documents. Show acceptance criteria with each requirement and indication of compliance of each inspected item. Annotation of non-compliance must be conspicuous so as to facilitate identification and transfer to the Rework Log. Report forms must include requirements and acceptance and rejection criteria, and must be legible and presented so that entered data can be quickly compared to the appropriate requirement.

3.9.2.3 Daily Inspection Reports

Submit one copy of daily inspection report completed each day when performing work under this Section, to the Contracting Officer. Note all non-compliance issues, and all issues that were reported for rework in accordance with QC procedures of Section 01 45 00.00 20 QUALITY CONTROL. Each report must be signed by the coating inspector and the QC Manager. Submit hardcopy report within 24 hours of date recorded on the report.

3.9.2.4 Inspection Logbook

A continuous record of all activity related to this Section must employ the electronic reporting program TruQC or equivalent as outlined in Table III and be maintained on a daily basis. The computer / software package must be used to record all information provided in the Daily Inspection Reports, as well as other pertinent observations and information including photo documentation where appropriate. The designated Government Representative for the project is assigned the highest level Administrator privilages and only the Administrator must be able to modify reports.

In areas where photography is not allowed the computer must come with verification that the camera / photo capability has been removed. Alternatively, a continuous record of all activity related to this Section must be maintained in an Inspection Logbook on a daily basis. The logbook must be hard or spiral bound with consecutively numbered pages, and must be used to record all information provided in the Daily Inspection Reports, as well as other pertinent observations and information. The Coating Inspector's Logbook that is sold by NACE is satisfactory. Submit the original Inspection Logbook to the Contracting Officer upon completion of the of the project and prior to final payment.

3.9.3 Inspection Equipment

All equipment must be in good condition, operational within its design range, and calibrated as required by the specified standard for use of each device.

3.9.3.1 Black Light

Use a black light having a 365 nanometer intensity of 4,000 microwatts per square centimeter minimum at 380 mm. The Spectroline BIB-150P from Spectronics Corporation satisfies this requirement.

3.10 FINAL CLEANUP

Following completion of the work, remove debris, equipment, and materials from the site. Remove temporary connections to Government or Contractor furnished water and electrical services. Restore existing facilities in and around the work areas to their original condition.

TABLE I

COATING QUALITY CONFORMANCE INSPECTION REQUIREMENTS

Polysulfide Modified Novolac Epoxy Coating

Test	Componenent A		Component B		Mixed	
	Min.	Max.	Min.	Max.	Min.	Max.
Viscosity, Brookfield, mPa-s (cp) (ASTM D2196), Test Method A, 20 rpm, Spindle 5	6000	18000	3000	18000	2000	11000
Weight ASTM D1475						
Kilograms / liter	1.09	1.26	1.18	1.56	1.18	1.38
Pounds / gallon	9.10	10.50	9.80	13.00	9.80	11.50
Dry Time (ASTM D1640/D1640M), at 23 degrees C 73 degrees F						
Set to touch, hours	---	---	---	---	---	16
Dry-hard time, hours	---	---	---	---	---	36
Fineness of grind, Hegman (ASTM D1210)	5	---	5	---	---	---
Sag resistance (ASTM D4400)						
Micrometers	---	---	---	---	508	---
Mils	---	---	---	---	20	---
Pot life, minutes 600 grams at 73 degrees F (via x2 viscosity)	---	---	---	---	30	---
Color of dry film Approximate FED-STD-595 Off White, and be no darker than color 27778	---	---	---	---	Conform	

TABLE I

COATING QUALITY CONFORMANCE INSPECTION REQUIREMENTS

Polysulfide Modified Novolac Epoxy Coating

Test	Componenent A		Component B		Mixed	
	Min.	Max.	Min.	Max.	Min.	Max.
Contrast ratio, White (ASTM D2805) at 127 micrometers, 5 mils DFT	---	---	---	---	0.97	+/-.01
DFT Gloss, (ASTM D523) 60 degree specular	---	---	---	---	85	---
VOC * (ASTM D3960)						
Grams / liter	---	---	---	---	< 50	
Pounds / gallon	---	---	---	---	<.42	
Total Lead & Cadmium (ASTM D3335)	---	---	---	---	<.0006 percent	
Total Chromium (ASTM D3718)	---	---	---	---	<.0006 percent	
Fourier tansform infrared spectroscopy (FTIR)					Conform +/- 10 percent	
Match Manufacturer's Qualification FTIR test scans to Component "A" Liquid (ASTM D7588) Component "B" Liquid (ASTM D7588)						

Table II	
COATING QUALIFICATION INSPECTION REQUIREMENTS	
Polysulfide Modified Novolac Epoxy Coating System	
Physical Properties	Acceptance Criteria
Solids, by weight(ASTM D2369), Method E	100 percent
Mix Ratio (by volume) (Components A and B)	1:1
Pigment content, percent wt (ASTM D2698)	
Component A	25.0 max.
Component B	24.0 min.
Total Components A and B	35.0 max.
Titanium dioxide content, percent of pigment, Type IV, V (ASTM D476)	> 80
Volatiles, percent wt (ASTM D2369)	
Component A	0.2 max.
Component B	0.2 max.
Mixed	0.4 max.
Non-volatile vehicle, percent wt	
Component A	93.0 min. 98.0 max
Component B	66.0 min. 71.0 max.
Coarse particles, percent (ASTM D185)	
Component A & B	0.3 max.
Pot Life (600 grams at 73 degrees F), Minimum (via x2 viscosity)	30 minutes
Sag resistance, minimum (ASTM D4400)	
Micrometers	508
Mils	20
Color of dry film Approximate FED-STD-595 Off White, and be no darker than color 27778	Conform

Table II	
COATING QUALIFICATION INSPECTION REQUIREMENTS	
Polysulfide Modified Novolac Epoxy Coating System	
Physical Properties	Acceptance Criteria
Contrast ratio, White (ASTM D2805) at 127 micrometers, 5 mils	0.97 +/- .01
Gloss, (ASTM D523) at 127 micrometers, 5 mils DFT	85 min.
Flash Point, Components A & B, Degrees F, (Degrees C), by one of the following methods: (ASTM D3278), (ASTM D93) or (ASTM D56)	>200(93.3)
VOC * (ASTM D3960)	
Grams / liter	< 50 max.
Pounds / gallon	<.42 max.
Viscosity, Brookfield mPa-s (cp) (ASTM D2196), Test Method A, 20 rpm, Spindle 5	
Component A at 77 degrees F (25 degrees C)	6000 - 18000
Component B at 77 degrees F (25 degrees C)	3000 - 15000
Mixed (Components A and B) at 77 degrees F (25 degrees C)	2000 - 11000
Total Lead & Cadmium (ASTM D3335)	<.0006 percent
Total Chromium (ASTM D3718)	<.0006 percent
Weight (ASTM D1475)	
Component A, Kilograms / liter	1.09 - 1.26
Component B, Kilograms / liter	1.18 - 1.56
Mixed, Kilograms / liter	1.18 - 1.38
Component A, Pounds per gallon	9.1 - 10.5
Component B Pounds per gallon	9.8 - 13.0
Mixed, Pounds per gallon	9.8 - 11.5
Dry Time, (ASTM D1640/D1640M), at 23 degrees C, 73 degrees F	
Set to touch, hours	16 max.

Table II	
COATING QUALIFICATION INSPECTION REQUIREMENTS	
Polysulfide Modified Novolac Epoxy Coating System	
Physical Properties	Acceptance Criteria
Dry-hard time, hours	36 max.
Fineness of grind, Hegman (ASTM D1210)	
Component A	5 min.
Component B	5 min.
Tensile Strength (psi) (ASTM D2370)	> 800
Elongation at break (ASTM D2370)	> 50
Hardness (Shore D), 14 Days Cure (ASTM D2240)	> 30
Adhesion, Steel (ASTM D4541), Test Method E, psi	> 2,000
Direct Impact Resistance, in/lbs (ASTM D2794)	> 100
Contact Angle (ASTM D7334), degrees Average of 10 Droplets 1-3 microliters Distilled Water	>/= 90
Immersion Testing Per IMMERSION TESTING PROCEDURES shown below	Conform
FTIR - upon confirmation of product conformity to requirements, produce a set of three FTIR scans to be used to assess conformity of all subsequent batches of this material, as follows: (1) Component A Liquid, (ASTM D7588) (2) Component B Liquid, (ASTM D7588) (3) Mixed (Components A and B) Dry Film (0.01 - 0.03g coating in 0.5 g KBr)	

IMMERSION TESTING PROCEDURE

Perform Immersion Test in accordance with NACE TM0174, revised as follows:

- Use Procedure B
- Test solutions - 1/3 reagent, 1/3 water, 1/3 air, by volume
- Constant-temperature bath at 60 degrees C
- Pre-exposure conditioning - cure coating at 25 degrees C for 14 days
- Exposure period - 6 months with inspections at 90 Days and 180 Days
- Panels -two panels for each test - one for test and one for control
    - Carbon steel approximately 13 cm long, 3 cm wide and a minimum of 5 mm thick.
    - Round edges to minimum 1.6 mm radius.
    - SSPC SP 10/NACE No. 2 "Near White Blast Profile" with a 50 to 75 micron surface profile.
    - Two coats of coating at approx. 12 to 15 mils, total 24 mils minimum, 30 mils maximum.

Inspection
- Initial inspection before testing - per NACE TM0174, paragraph 6.1 and record weight of each panel in grams
- Interim and final inspections - Condition panels per NACE TM0174, paragraph 6.2.1, 6.2.1.1, 6.2.1.2, 6.2.2, 6.2.2.1, 6.2.2.1.1, 6.2.2.1.2, 6.2.2.2, and ASTM D714, and record weight of each panel in grams

Report - per NACE TM0174, Section 7

Acceptance criteria
- Allowable weight gain/loss is +/- 5 percent
- Allowable blistering - ASTM D714, No. 10 (no visible blisters)
- Allowable color change - see following table

List of test solutions and allowable color change

Reagent	Type Water	Allowable Color Change
JP-5 w/.20 percent deicing	Deionized water	Discoloration
JP-5 w/.20 percent deicing	Seawater	Discoloration
JP-8 w/.20 percent deicing	Deionized water	Discoloration
JP-8 w/.20 percent deicing	Seawater	Discoloration
F-76	Deionized water	Discoloration
F-76	Seawater	Discoloration

Deicing Agent - Diethylene Glycol Monomethyl Ether

Synthetic seawater (Sea H2O) (ASTM D1141), Formula A, Table X1.1, Section 6

* The Volatile Organic Compound (VOC) content must be determined in accordance with ASTM D3960. Multi-Component coatings will be blended together in the specified mixing ratios prior to testing.

Any products may be qualified by providing independent testing results to the requirements in this table. Coating Systems that currently meet these requirements and do not require COATING QUALIFICATION INSPECTION testing until January 31, 2016 include the following products only:

Premier Coating Systems, Inc (904)824-1799 Phone, (904)403-6113 Cell
PCS-#1100 Modified Epoxy Novolac Polysulfide Coating

Polyspec-Thiokol (281)397-0033 Phone, (281)703-8417 Cell
Thiokol FNEC 2515 Flexible Novolac Epoxy

Table III
QA/QC Reporting Program Requirements

Administrative Controls:

Administrators must be able to turn on and off unique access to specific jobs and contracts.

Administrators must be able to remotely enable / disable access for users.

All enabled users must view the same active report in real time. There must be no opportunity for multiple versions of the same report to exist.

Administrators must be able to setup unique approval processes for each project and promote or remove unique people from this process at any time.

Administrators must be able to associate contract specific documents and specification limits quickly and easily.

Administrators must be able to associate PDS, MSDS, blueprints, scope of work and contracts uniquely to each job.

Objectivity Controls:

Data Entry fields must be by multi-selectable choices, numeric keypads, pickers and skip logic to ensure repeatable data entry in a way that makes running analytics and metrics easy and objective.

The program / hardware package must be able to communicate with inspection devices that provide (batch) data export capability such as Elcometer and Defelsko gages.

Must automatically time, date and GPS stamp all reports without input or interference from the inspector.

Real Time Syncing:

Forms must be available for approved associates to view at all times.

Retrievable storage must be provided for all job related reports and documents for a minimum time of 5 years from completion of the job or project. Archiving of the documents after 5 years will be the responsibility of the Government.

Document Library:

All reports must be in searchable and annotatable PDF format.

The Administrator must be able to upload and annotate job specific reports in real time. Examples include but not limited to Material Safety Data Sheets, Product Data Sheets and Blueprints.

Annotations / modifications must be locked and associated with the document. Only the Administrator has rights to modify or delete annotations or allow modifications to the document library especially all related inspection reports.

Customization:

The program must be capable of being customized to specific jobs, contracts or specifications.

-- End of Section --

THIS PAGE HAS BEEN INTENTIONALLY LEFT BLANK

SECTION 09 97 13.27

EXTERIOR COATING OF STEEL STRUCTURES
02/10

PART 1 GENERAL

1.1 REFERENCES

The publications listed below form a part of this specification to the extent referenced. The publications are referred to within the text by the basic designation only.

ASTM INTERNATIONAL (ASTM)

ASTM C920	(2014a) Standard Specification for Elastomeric Joint Sealants
ASTM D1200	(2010; R 2014) Viscosity by Ford Viscosity Cup
ASTM D1640/D1640M	(2014) Standard Test Methods for Drying, Curing, or Film Formation of Organic Coatings
ASTM D3276	(2007) Painting Inspectors (Metal Substrates)
ASTM D3925	(2002; R 2010) Sampling Liquid Paints and Related Pigmented Coatings
ASTM D4285	(1983; R 2012) Indicating Oil or Water in Compressed Air
ASTM D7127	(2013) Measurement of Surface Roughness of Abrasive Blast Cleaned Metal Surfaces using a Portable Stylus Instrument
ASTM E11	(2013) Wire Cloth and Sieves for Testing Purposes

INTERNATIONAL ORGANIZATION FOR STANDARDIZATION (ISO)

ISO 9001	(2008; Corr 1 2009) Quality Management Systems- Requirements

SOCIETY FOR PROTECTIVE COATINGS (SSPC)

SSPC 7/NACE No.4	(2007; E 2004) Brush-Off Blast Cleaning
SSPC AB 2	(1996; E 2004) Cleanliness of Recycled Ferrous Metallic Abrasive
SSPC AB 3	(2003; E 2004) Ferrous Metallic Abrasive
SSPC Guide 12	(1998; E 2004) Guide for Illumination of Industrial Painting Projects

SSPC Guide 6	(2004) Guide for Containing Surface Preparation Debris Generated During Paint Removal Operations
SSPC PA 1	(2000; E 2004) Shop, Field, and Maintenance Painting of Steel
SSPC PA 2	(2015) Measurement of Dry Coating Thickness With Magnetic Gages
SSPC QP 1	(2012; E 2012) Standard Procedure for Evaluating Painting Contractors (Field Application to Complex Industrial Structures)
SSPC QP 5	(2012) Standard Procedure for Evaluating the Qualifications of Coating and Lining Inspection Companies
SSPC QS 1	(2004) Standard Procedure for Evaluating a Contractor's Advanced Quality Management System
SSPC SP 1	(1982; E 2004) Solvent Cleaning
SSPC SP 10/NACE No. 2	(2007) Near-White Blast Cleaning
SSPC SP COM	(2004) Surface Preparation Commentary for Steel and Concrete Substrates
SSPC VIS 1	(2002; E 2004) Guide and Reference Photographs for Steel Surfaces Prepared by Dry Abrasive Blast Cleaning

U.S. DEPARTMENT OF DEFENSE (DOD)

MIL-A-22262	(1993; Rev B; Am 2 1996) Abrasive Blasting Media Ship Hull Blast Cleaning
MIL-DTL-24441	(2009; Rev D) Paint, Epoxy-Polyamide, General Specification for
MIL-DTL-24441/19	(2009; Rev C) Paint, Epoxy-Polyamide, Zinc Primer, Formula 159, Type III
MIL-DTL-24441/31	(2009; Rev B) Paint, Epoxy-Polyamide, White, Formula 152, Type IV
MIL-PRF-85285	(2012; Rev E) Coating: Polyurethane Aircraft and Support Equipment
MIL-STD-161	(2005; Rev G; Notice 1 2010) Identification Methods for Bulk Petroleum Products Systems Including Hydrocarbon Missile Fuels

U.S. GENERAL SERVICES ADMINISTRATION (GSA)

FED-STD-595	(Rev C; Notice 1) Colors Used in Government Procurement

U.S. NATIONAL ARCHIVES AND RECORDS ADMINISTRATION (NARA)

29 CFR 1910.1000	Air Contaminants
29 CFR 1910.134	Respiratory Protection
29 CFR 1926.59	Hazard Communication

1.2 DEFINITIONS

Definitions are provided throughout this Section, generally in the paragraph where used, and denoted by capital letters.

1.3 SUBMITTALS

Government approval is required for submittals with a "G" designation; submittals not having a "G" designation are for Contractor Quality Control approval. Submittals with an "S" are for inclusion in the Sustainability Notebook, in conformance to Section 01 33 29 SUSTAINABILITY REPORTING. Submit the following in accordance with Section 01 33 00 SUBMITTAL PROCEDURES:

SD-05, Design Data

Containment System

SD-06 Test Reports

Joint Sealant Qualification Test Reports; G

Coatings Qualification Test Reports; G

Metallic Abrasive Qualification Test Reports; G

Coating Sample Test Reports; G

Abrasive Sample Test Reports; G

Inspection Report Forms; G

Daily Inspection Reports; G

Recycled Metallic Abrasive Field Test Reports (Daily and Weekly)

SD-07 Certificates

Contract Errors, Omissions, and Other Discrepancies; G

Corrective Action Procedures; G

Coating Work Plan; G

Qualifications of Certified Industrial Hygienist (CIH); G

Qualifications Of Individuals Performing Abrasive Blasting; G

Qualifications of Certified Protective Coatings Specialist (PCS); G

Qualifications of Coating Inspection Company; G

Qualifications of QC Specialist Coating Inspector; G

Qualifications of Testing Laboratory for Coatings; G

Qualifications of Testing Laboratory for Abrasive; G

Qualifications of Coating Contractors; G

Joint Sealant Materials; G

Coating Materials; G

Coating System Component Compatibility; G

Non-metallic Abrasive; G

Metallic Abrasive; G

SD-08 Manufacturer's Instructions

Joint Sealant Instructions; G

Coating System Instructions; G

SD-11 Closeout Submittals

Disposal of Used Abrasive; G

Inspection Logbook; G

1.4 QUALITY ASSURANCE

1.4.1 Contract Errors, Omissions, and Other Discrepancies

Submit all errors, omissions, and other discrepancies in contract documents the Contracting Officer within 30 days of contract award for all work covered in this Section, other than the work that will not be uncovered until a later date. All such discrepancies shall be addressed and resolved, and the Coating Work Plan modified, prior to beginning the Initial and Follow-Up phases of work. Discrepancies that become apparent only after work is uncovered shall be identified at the earliest discoverable time and submitted for resolution. Schedule time (Float) should be built into the project schedule at those points where old work is to be uncovered or where access is not available during the first 30 days after award, to allow for resolution of contract discrepancies.

1.4.2 Corrective Action (CA)

CA shall be included in the Quality Control Plan.

1.4.2.1 Corrective Action Procedures

Develop procedures for determining the root cause of each non-compliance,

developing a plan to eliminate the root cause so that the non-compliance does not recur, and following up to ensure that the root cause was eliminated. Develop Corrective Action Request (CAR) forms for initiating CA, and for tracking and documenting each step.

1.4.2.2 Implement Corrective Action

The Contractor shall take action to identify and eliminate the root cause of each non-compliance so as to prevent recurrence. These procedures shall apply to non-compliance in the work, and to non-compliance in the QC System. Corrective actions shall be appropriate to the effects of the non-compliance encountered. Each CAR shall be serialized, tracked in a Log to completion and acceptance by the Contracting Officer, and retained in project records. The Corrective Action Log, showing status of each CAR, shall be submitted to the Contracting Officer monthly. A CAR may be initiated by either the Contractor or the Contracting Officer. The Contracting Officer must approve each CAR at the root cause identification stage, the plan for elimination stage, and the close out stage after verification that the root cause has been eliminated.

1.4.3 Coating Work Plan

This work plan shall be considered as part of the Quality Control Plan.

Provide procedures for reviewing contract documents immediately after award to identify errors, omissions, and discrepancies so that any such issues can be resolved prior to project planning and development of detailed procedures.

Provide procedures for verification of key processes during Initial Phase to ensure that contract requirements can be met. Key processes shall include surface preparation, coating application and curing, inspection, and documentation, and any other process that might adversely impact orderly progression of work.

Provide procedures for all phases of coating operations, including planned work, rework, repair, inspection, and documentation. Address mobilization and setup, surface preparation, coating application, coating initial cure, tracking and correction of noncompliant work, and demobilization. Coordinate work processes with health and safety plans and confined space entry plans. For each process, provide procedures that include appropriate work instructions, material and equipment requirements, personnel qualifications, controls, and process verification procedures. Provide procedures for inspecting work to verify and document compliance with contract requirements, including inspection forms and checklists, and acceptance and rejection criteria.

Provide procedures for correcting noncompliant work. Detailed procedures are required in advance to avoid delays in meeting overcoat windows as well as to avoid delays in production. Provide procedures for repairing defects in the coating film, such as runs, drips, sags, holidays, overspray, as well as how to handle correct coating thickness noncompliance, any other areas of repair or rework that might be adversely affected by delays in preparing and approving new procedures.

If a procedure is based on a proposed or approved request for deviation, the deviation shall be referenced. Changes to procedures shall be noted by submittal number and date approved, clearly delineating old requirements and new requirements, so that the records provide a

continuous log of requirements and procedures.

1.4.4 Design Data

1.4.4.1 Containment System

Submit complete design drawings and calculations for the scaffolding and containment system, including an analysis of the loads which will be added to the structure by the containment system and waste materials. A registered engineer shall approve calculations and scaffold system design.

1.4.5 Test Reports

1.4.5.1 Joint Sealant Qualification Test Reports

Submit test results from independent laboratory of representative samples of joint sealant material. Samples must have been tested within the last three years. Submit results as required in paragraph QUALITY ASSURANCE PROVISIONS of ASTM C920. Note that testing in accordance with QUALITY ASSURANCE PROVISIONS is a pre-qualification requirement.

1.4.5.2 Coatings Qualification Test Reports

Submit test results from independent laboratory of representative samples of each coating material. U.S. Department of Defense laboratories are considered to be independent laboratories for purposes of compliance with "QUALIFICATION INSPECTION" requirements herein. Samples must have been tested within the last three years. Submit results for epoxy materials as required in paragraph QUALIFICATION INSPECTION of MIL-DTL-24441, and as revised by paragraph COATING SYSTEM herein. Submit results for polyurethane materials as required in paragraph QUALIFICATION INSPECTION of MIL-PRF-85285, and as revised by paragraph COATING SYSTEM herein. Note that requirement for QUALIFICATION INSPECTION is a pre-qualification requirement, and involves the same testing required for listing in the Qualified Products List of the respective material. See appropriate Military Specification for specific test requirements.

1.4.5.3 Metallic Abrasive Qualification Test Reports

Submit results for abrasive as required in paragraph 4 REQUIREMENTS of SSPC AB 3. Submit test results from independent laboratory of representative samples of each abrasive to be used on the jobsite. Samples must have been tested within the last three years. Note that this testing is for the purpose of prequalifying the abrasive.

1.4.5.4 Recycled Metallic Abrasive Field Test Reports (Daily and Weekly)

Submit test results from independent laboratory of daily and weekly Quality Control testing required by SSPC AB 2, as modified in paragraph ABRASIVE.

1.4.6 Qualifications

1.4.6.1 Qualifications of Certified Industrial Hygienist (CIH)

Submit name, address, telephone number, FAX number, and e-mail address of the independent third party CIH. Submit documentation that hygienist is certified by the American Board of Industrial Hygiene in comprehensive practice, including certification number and date of

certification/recertification. Provide evidence of experience with hazards involved in industrial coating application work.

1.4.6.2 Qualifications of Certified Protective Coatings Specialist (PCS)

Submit name, address, telephone number, FAX number, and e-mail address of the independent third party PCS. Submit documentation that specialist is certified by SSPC: The Society for Protective Coatings (SSPC) as a PCS, including certification number and date of certification/recertification. If the PCS is employed by the same coating inspection company to which the coating inspector is employed, this does not violate the independent third-party requirements. The PCS shall remain certified during the entire project, and the Contracting Officer shall be notified of any change in certification status within 10 days of the change. The PCS shall not be the designated coating inspector.

1.4.6.3 Qualifications of Coating Inspection Company

Submit documentation that the coating inspection company that will be performing all coating inspection functions is certified by SSPC to the requirements of SSPC QP 5 prior to contract award, and shall remain certified while accomplishing any coating inspection functions. The coating inspection company must remain so certified for the duration of the project. If a coating inspection company's certification expires, the firm will not be allowed to perform any inspection functions, and all surface preparation and coating application work must stop, until the certification is reissued. Requests for extension of time for any delay to the completion of the project due to an inactive certification will not be considered and liquidated damages will apply. Notify the Contracting Officer of any change in coating inspection company certification status.

1.4.6.4 Qualifications of QC Specialist Coating Inspector

Submit documentation that each coating inspector is employed, and qualified to SSPC QP 5, Level III, by the selected coating inspection company. Each inspector shall remain employed by the coating inspection company while performing any coating inspection functions.

1.4.6.5 Qualifications Of Individuals Performing Abrasive Blasting

Submit name, address, and telephone number of each person that will be performing abrasive blasting. Submit documentation that each blaster is qualified by SSPC to the SSPC C-7 Dry Abrasive Blaster Qualification Program. Each blaster shall remain qualified during the entire period of abrasive blasting, and the Contracting Officer shall be notified of any change in qualification status.

1.4.6.6 Qualifications of Testing Laboratory for Coatings

Submit name, address, telephone number, FAX number, and e-mail address of the independent third party laboratory selected to perform testing of coating samples for compliance with specification requirements. Submit documentation that laboratory is regularly engaged in testing of paint samples for conformance with specifications, and that persons performing analyses are qualified.

1.4.6.7 Qualifications of Testing Laboratory for Abrasive

Submit name, address, telephone number, FAX number, and e-mail address of

the independent third party laboratory selected to perform testing of abrasive for compliance with specification requirements. Submit documentation that laboratory has experience in testing samples of abrasive for conformance with specifications, and that persons performing analyses are qualified.

1.4.6.8 Qualifications of Coating Contractors

All Contractors and Subcontractors that perform surface preparation or coating application shall be certified to either ISO 9001 or SSPC QP 1 and SSPC QS 1 prior to contract award, and shall remain certified while accomplishing any surface preparation or coating application. The painting Contractors and painting Subcontractors must remain so certified for the duration of the project. If a Contractor's or Subcontractor's certification expires, the firm will not be allowed to perform any work until the certification is reissued. Requests for extension of time for any delay to the completion of the project due to an inactive certification will not be considered and liquidated damages will apply. Notify the Contracting Officer of any change in Contractor certification status.

1.4.6.9 Joint Sealant Materials

Provide manufacturer's certification of conformance to contract requirements.

1.4.6.10 Coating Materials

Provide manufacturer's certification of conformance to contract requirements.

1.4.6.11 Coating System Component Compatibility

Provide certification from each manufacturer of components of the coating system, epoxy primer, epoxy intermediate, and polyurethane topcoat, that the supplied coating material is suitable for use in the specified coating system. Each manufacturer shall identify the specific products, including manufacturer's name, which their product may be used with. The certification shall provide the name of the manufacturer that will provide technical support for the entire system. When all coating materials are manufactured by one manufacturer, this certification is not required.

1.4.6.12 Non-metallic Abrasive

Provide manufacturer's certification that the materials are currently approved by the Naval Sea Systems Command and listed on the Qualified Products Lists (QPL) for the specified materials.

1.4.6.13 Metallic Abrasive

Provide manufacturer's certification of conformance to contract requirements and provide copies of test results.

1.4.7 Protective Coating Specialist (PCS)

The PCS shall be considered a QC Specialist and shall report to the QC Manager, as specified in Section 01 45 00.00 20 QUALITY CONTROL. The PCS shall approve all submittals prior to submission to the QC Manager for approval or submission to the government for approval.

1.4.8 Pre-Application Meeting

After approval of submittals but prior to the initiation of coating work, Contractor representatives, including at a minimum, project superintendent and QC manager, paint foreman, coating inspector, and PCS shall have a pre-application coating preparatory meeting. This meeting shall be in addition to the pre-construction conference. Specific items addressed shall include: corrective action requirements and procedures, coating work plan, safety plan, coordination with other Sections, inspection standards, inspection requirements and tools, test procedures, environmental control system, safety plan, and test logs. Notify Contracting Officer at least ten days prior to meeting.

1.5 PRODUCT DATA

1.5.1 Joint Sealant Instructions

Submit manufacturer's printed instructions including detailed application procedures, minimum and maximum application temperatures, and curing procedures. Include materials safety data sheets (MSDS) for materials to be used at the job site in accordance with 29 CFR 1926.59.

1.5.2 Coating System Instructions

Submit manufacturer's printed instructions including detailed mixing and application procedures, number and types of coats required, minimum and maximum application temperatures, and curing procedures. Include materials safety data sheets (MSDS) for materials to be used at the job site in accordance with 29 CFR 1926.59.

1.6 DELIVERY AND STORAGE

Ship, store, and handle materials in accordance with SSPC PA 1, and as modified in this Section. Maintain temperature in storage spaces between 5 and 29 degrees C, and air temperature more than 3 degrees C above the dew-point at all times. Inspect materials for damage prior to use and return non-compliant materials to manufacturer. Remove materials with expired shelf life from government property immediately and notify the Contracting Officer.

If materials are approaching shelf life expiration and an extension is desired, samples may be sent to the manufacturer, along with complete records of storage conditions, with a request for shelf life extension. If the manufacturer finds the samples and storage data suitable for shelf life extension, the manufacturer may issue an extension, referencing the product evaluation and the review of storage records. Products may not be extended longer than allowed in the product specification.

1.7 COATING HAZARDS

Ensure that employees are trained in all aspects of the safety plan. Specified coatings may have potential health hazards if ingested or improperly handled. The coating manufacturer's written safety precautions shall be followed throughout mixing, application, and curing of the coatings. During all cleaning, cleanup, surface preparation, and paint application phases, ensure that employees are protected from toxic and hazardous chemical agents which exceed concentrations in 29 CFR 1910.1000. Comply with respiratory protection requirements in 29 CFR 1910.134. The

CIH shall approve work procedures and personal protective equipment.

1.8 JOB SITE REFERENCES

Make available to the Contracting Officer at least one copy each of ASTM D3276, ASTM D3925, ASTM D4285, ASTM D7127, SSPC SP COM, SSPC SP 1, SSPC 7/NACE No.4, SSPC SP 10/NACE No. 2, SSPC PA 1, SSPC PA 2, SSPC Guide 6, SSPC VIS 1, SSPC QP 1, SSPC QS 1, and an SSPC Certified Contractor Evaluation Form at the job site.

PART 2 PRODUCTS

2.1 JOINT SEALANT

TT-S-00230, Type II, Class B

2.2 COATING SYSTEM

Alternate systems or products will not be considered. All primer, intermediate coat and topcoat materials shall be supplied by one supplier. The entire coating system is intended to be applied in the field. Alternatively, surface preparation may be accomplished in the shop, following all temperature, humidity, and testing requirements listed herein, followed by an application of a hold-primer. Remove all shop-applied primer prior to final field surface preparation and coating system application. Adjust all shop preparation to avoid conflicts with final surface preparation requirements.

The Military specification epoxy and polyurethane products specified in this Section do not require approval for listing on the QPL prior to contract award, as indicated in paragraph 3.2 of MIL-DTL-24441 and paragraph 3.1 of MIL-PRF-85285. Testing of products by an independent laboratory to the QUALIFICATION INSPECTION requirements of MIL-DTL-24441 and MIL-PRF-85285 prior to contract award is required. See specific submittal requirements in paragraph QUALITY ASSURANCE.

2.2.1 Zinc-Rich Epoxy Primer Coat

Epoxy polyamide, MIL-DTL-24441/19 (Formula 159, Type III).

2.2.2 Epoxy Intermediate Coat

Epoxy polyamide, MIL-DTL-24441/31 (Formula 152, Type IV, White (Tinted)). Tint to approximately FED-STD-595 color number 27778 parchment using pigment dispersions prepared for epoxy paint tinting. Manufacturer shall tint material and appropriately label. All other requirements of this Military Specification apply.

2.2.3 Polyurethane Topcoat

Polyurethane coating topcoat of MIL-PRF-85285, Type II, White FED-STD-595 color number 17925.

Modify paragraph 3.6.4 of MIL-PRF-85285, Viscosity and Pot Life, as follows:

> The viscosity of the admixed coating, when tested in accordance with ASTM D1200 through a No. 4 Ford cup, shall be as follows:

Time from mix (minimum)	Maximum time through a No. 4 Ford cup
Initially	30 seconds
2 hours	60 seconds
4 hours	No gel

Modify paragraph 3.7.1 of MIL-PRF-85285, Drying Time, as follows:

When applied by spray techniques and when tested in accordance with ASTM D1640/D1640M, the coating shall be set-to-touch within four hours and dry-hard within eight hours (see 4.6 and table I).
Do not provide polyurethane topcoat on the exterior of the operating storage tanks (cut and cover tanks).

2.3 COLOR IDENTIFICATION OF FUEL HANDLING AND STORAGE FACILITIES

Piping, conduit, and tank identification shall be in accordance with MIL-STD-161. Mark direction of fluids in accordance with MIL-STD-161.

2.4 COATING SAMPLE COLLECTION AND SHIPPING KIT

Provide a kit that contains one liter can for the base of each coating material, an appropriately sized can for each activator, dipping cups for each component to be sampled, a shipping box sized for the samples to to be shipped, and packing material. Mark cans for the appropriate component. Provide shipping documents, including either pre-paid shipping or a shipper number that can be used by the QC Manager to arrange pickup, addressed to the approved coating testing laboratory.

2.5 ABRASIVE SAMPLE COLLECTION AND SHIPPING KIT

Provide a kit that contains one suitable plastic bag or container for each sample to be collected. Mark containers for the appropriate component. Provide shipping documents, including either pre-paid shipping or a shipper number that can be used by the QC Manager to arrange pickup, addressed to the approved coating testing laboratory.

2.6 TEST KITS

2.6.1 Test Kit for Measuring Chloride, Sulfate and Nitrate Ions on Steel and Coated Surfaces

Provide test kits called CHLOR*TEST CSN Salts, as manufactured by CHLOR*RID International Inc. of Chandler, Arizona (www.chlor-rid.com) or equal. An "equal" test kit shall meet the following requirements:

a. Kit contains all materials,supplies, tools and instructions for field testing and on-site quantitative evaluation of chloride, sulfate and nitrate ions;

b. Kit extract solution is acidic, factory pre-measured, pre-packaged, and of uniform concentration;

c. Kit components and solutions are mercury free and environmentally friendly;

d. Kit contains new materials and solutions for each test extraction;

e. Extraction test container (vessel, sleeve, cell. etc.) creates a sealed, encapsulated environment during salt ion extraction;

f. Test extract container is suitable for testing the following steel surfaces: horizontal (up/down configuration), vertical, flat, curved, smooth, pitted, and rough;

g. All salt ion concentrations are directly measured in micrograms per square centimeter.

2.6.2 Test Kit for Identifying Amine Blush on Epoxy Surfaces

After coating and/or primer has hardened and prior to applying the next coat, test for unreacted amines using the AMINE BLUSH CHECK, manufactured by Elcometer, Rochester Hills, Michigan, or equal. To be considered for approval as an "equal" test kit it shall meet the following requirements:

a. Be a completely self-contained field test kit with all materials, supplies, tools and instructions to perform tests and indicate the presence of unreacted amines;

b. Use an identifiable, consistent, uniform, pre-packaged, factory pre-measured indicating solution;

c. Kit contains no mercury or lead and is environmentally friendly;

d. Kit contains a solution of an unreacted amine for the purpose of "self checking" the indicator solution;

2.7 ABRASIVE

The referenced abrasive specifications have maximum limits for soluble salts contamination, however, this maximum level of contamination does not guarantee that contamination will not be transferred to the steel surface during abrasive blasting. Other factors such as on-site handling and recycling can allow contamination of abrasive. Contractors are cautioned to verify that the chosen abrasive, along with work and storage processes, allow the final surface cleanliness requirements to be achieved. Successful testing of chlorides in abrasive does not negate the final acceptance testing of steel surfaces.

2.7.1 Non-metallic Abrasive

Conform to MIL-A-22262, Type I (Inorganic materials) except that the gross gamma radioactivity shall not exceed 5 picocuries per gram. Abrasive shall be approved by the Naval Sea Systems Command and listed on the appropriate Qualified Products List (QPL) for the specified materials. Use sampling procedures and testing frequencies as prescribed in MIL-A-22262. Use abrasive that is specifically selected and graded to provide a sharp, angular profile to the specified depth. Do not use ungraded abrasive. Make adjustments to processes or abrasive gradation to achieve specified surface profile. Recycled non-metallic abrasive shall

meet all requirements of the specification each time that it is placed in the blast pot.

2.7.2 Metallic Abrasive

2.7.2.1 New and Remanufactured Steel Grit

Conform to the chemical and physical properties of SSPC AB 3 Class 1 (Steel) only, except that the gross gamma radioactivity shall not exceed 5 picocuries per gram. Class 2 (Iron) abrasive shall not be used.

To develop a suitable work mix from new steel abrasive, a minimum of 200 - 400 recycles is required, therefore, it is advantageous for a Contractor to use remanufactured steel grit or grit reclaimed from a previous project. Such grit shall be considered to conform if it can be traced to new grit conforming to SSPC AB 3 Class 1 and it meets all cleanliness requirements of SSPC AB 3 Class 1 when brought to the current jobsite. Submit one representative sample of this work mix to the laboratory for testing, along with samples of new material. Acceptance and use of this work mix shall not be used to justify any deviation from surface preparation requirements.

2.7.2.2 Recycled Steel Grit

Conform to the chemical and physical properties of SSPC AB 2

2.8 White Aluminum Oxide Non-skid Grit

Size #60, dust free (washed and dry), minimum 99 percent pure, having the following sieve analysis when tested in accordance with ASTM E11 using a 1000 gramsample:

Sieve #	Percent Retained
40	0
50	15-40
60	60-85

PART 3 EXECUTION

Perform all work, rework, and repair in accordance with approved procedures in the Coating Work Plan.

3.1 COATING AND ABRASIVE SAMPLE COLLECTION AND TESTING

Sample and test materials delivered to the jobsite. Notify Contracting Officer three days in advance of sampling. The QC Manager and either the PCS or coating inspector shall witness all sampling.

3.1.1 Coating Sample Collection

Provide a sample collection kit as required in paragraph COATING SAMPLE COLLECTION AND SHIPPING KIT. From each lot, obtain a one liter sample of each base material, and proportional samples of each activator based on mix ratio, by random selection from sealed containers in accordance with ASTM D3925. Prior to sampling, mix contents of each sealed container to

ensure uniformity. As an alternative to collecting small samples from kits, entire kits may be randomly selected and shipped to laboratory, observing all requirements for witnessing and traceability. For purposes of quality conformance inspection, a lot is defined as that quantity of materials from a single, uniform batch produced and offered for delivery at one time. A batch is defined as that quantity of material processed by the manufacturer at one time and identified by number on the label. Identify samples by designated name, specification number, batch number, project contract number, sample date, intended use, and quantity involved. The QC manager will take possession of the packaged samples, contact the shipping company to arrange for pickup, and relinquish the samples only to the shipping representative for shipment to the approved laboratory for testing as required by the paragraph COATING SAMPLE TEST REPORTS.

3.1.2 Abrasive Sample Collection

Provide a sample collection kit as required in paragraph ABRASIVE SAMPLE COLLECTION AND SHIPPING KIT. For purposes of quality conformance inspection, a lot shall consist of all abrasive materials of the same type from a single, uniform batch produced and offered for delivery at one time. Obtain samples of each abrasive lot using the sampling techniques and schedule of MIL-A-22262. The addition of any substance to a batch shall constitute a new lot. Identify samples by designated name, specification number, lot number, project contract number, sample date, intended use, and quantity involved. The QC manager will take possession of the packaged samples, contact the shipping company to arrange for pickup, and relinquish the samples only to the shipping representative for shipment to the approved laboratory for testing as required by the paragraph ABRASIVE SAMPLE TEST REPORTS.

3.1.3 Coating Sample Test Reports

Submit test results for each lot of coating material delivered to the jobsite. Test samples of primer, intermediate, and topcoat materials for compliance with requirements of Table I. Reject entire lot represented by samples that fail one or more tests, select new lots, and test samples.

3.1.4 Abrasive Sample Test Reports

Submit test results for each lot of abrasive delivered to the jobsite. Test samples of metallic abrasive to the requirements of paragraph REQUIREMENTS of SSPC AB 3, except paragraph 4.1.5 DURABILITY. Test samples of non-metallic abrasive as required in paragraph QUALITY CONFORMANCE INSPECTION of MIL-A-22262. Reject entire lot represented by samples that fail one or more tests, select new lots, and test samples.

3.2 SURFACES TO BE COATED

Coat exterior surfaces of tank structure and exterior of aboveground carbon steel piping.

3.3 LIGHTING

Provide lighting for all work areas as prescribed in SSPC Guide 12.

3.4 ENVIRONMENTAL CONDITIONS

3.4.1 Containment

Design and provide a containment system for the capture, containment, collection, storage and disposal of the waste materials generated by the work under this Section, to meet the requirements of SSPC Guide 6, Class 3. Vapor concentrations shall be kept at or below 10 percent of Lower Explosive Limit (LEL) at all times. Containment may be designed as fixed containment for complete structure or portable containment for sections of structure, however, containment shall remain in any one place from beginning of abrasive blasting through initial cure of coating. Waste materials covered by this paragraph shall not include any material or residue from removal of coatings containing lead, chromium, cadmium, PCB, or any other hazardous material.

It is the Contractors responsibility to insure the feasibility and workability of the containment system. The Contractor shall perform his operations and work schedule in a manner as to minimize leakage of the containment system. The containment system shall be properly maintained and shall not deviate from the approved drawings. If the containment system fails to function satisfactorily, the Contractor shall suspend all operations, except those required to minimize adverse impact on the environment or government property. Operations shall not resume until modifications have been made to correct the cause of the failure.

3.4.2 Automated Monitoring Requirements

Provide continuous monitoring of temperature, relative humidity, and dew point data at pertinent points on the structure, during surface preparation, coating application, and initial cure. Locate sensors to provide pertinent data for the surface preparation and coat application being performed. Monitor any heating, cooling, or dehumidification equipment used. Make data available to the Contracting Officer through Internet access. Provide monitoring equipment to perform as follows:

a. Data is collected in the field unit in one minute increments, and available for download (on-site) in a standard format. Contractor shall collect this data and make available to the Contracting Officer;

b. Monitoring equipment shall have backup power such that data collection and transmission to web server will be uninterrupted during the entire period of the dehumidification requirement;

c. Monitoring equipment shall have capability to measure surface temperatures at a minimum of four locations anywhere on a 150 foot diameter by 50 foot high tank;

d. Monitoring equipment shall have capability to measure interior and exterior dry bulb temperature (DB), relative humidity (RH), and dewpoint temperature (DP);

e. Data shall be available continuously through secure Internet connection, using widely available web browsers;

f. Internet accessible data shall be collected and stored in maximum 15 minute increments, and lag time between data collection and online availability shall be no greater than 70 minutes;

g. Internet accessible data shall be available for viewing online in tabular format, and graphical format using selected data;

h. Internet accessible data shall be available for download in user-defined segments, or entire project to date, in a standard format usable by Microsoft Excel and other spreadsheet programs.

i. Internet-based controls shall provide alerts to pre-designated parties through email messaging;

j. Internet-based controls shall monitor data uploads from field unit and issue alert if data not initiated within 60 minutes of last upload;

k. Internet-based controls shall monitor operation of DH equipment and issues alert when power remains off for more than 15 seconds, or if pre-determined temperature, RH, or DP conditions are exceeded;

The requirements listed here were developed around the Munters Exactaire Monitoring System, as this was the only monitoring system having Internet connectivity known to be commercially available. There is no requirement for connectivity of the monitoring system to control the DH equipment, therefore, any combination of equipment having the required functionality will be accepted.

3.5 SURFACE PREPARATION

3.5.1 Abrasive Blasting Equipment

Use abrasive blasting equipment of conventional air, force-feed, or pressure type. Maintain a minimum pressure of 650 kPa at nozzle. Confirm that air supply for abrasive blasting is free of oil and moisture when tested in accordance with ASTM D4285. Test air quality at each startup, but in no case less often than every five operating hours.

3.5.2 Operational Evaluation of Abrasive

Test abrasive for salt contamination and oil contamination as required by the appropriate abrasive specification daily at startup and every five operating hours thereafter.

3.5.3 Surface Standard

Inspect surfaces to be coated, and select plate with similar properties and surface characteristics for use as a surface standard. Blast clean one or more 300 mm square steel panels as specified in paragraph SURFACE PREPARATION. Record blast nozzle type and size, air pressure at nozzle and compressor, distance of nozzle from panel, and angle of blast to establish procedures for blast cleaning. Measure surface profile in accordance with ASTM D7127. When the surface standard complies with all specified requirements, seal with a clearcoat protectant. Use the surface standard for comparison to abrasive blasted surfaces throughout the course of work.

3.5.4 Pre-Preparation Testing for Surface Contamination

Perform testing, abrasive blasting, and testing in the prescribed order.

3.5.4.1 Pre-Preparation Testing for Oil and Grease Contamination

Inspect all surfaces for oil and/or grease contamination using two or more of the following inspection techniques: 1) Visual inspection, 2) WATER BREAK TEST, 3) CLOTH RUB TEST. Reject oil and/or grease contaminated surfaces, clean in accordance with SSPC SP 1, and recheck for contamination until surfaces are free of oil and grease.

WATER BREAK TEST - Spray atomized mist of distilled water onto surface, and observe for water beading. If water "wets" surface rather than beading up, surface can be considered free of oil or grease contamination. Beading of water (water forms droplets) is evidence of oil or grease contamination.

CLOTH RUB TEST - Rub a clean, white, lint free, cotton cloth onto surface and observe for discoloration. To confirm oil or grease contamination in lightly stained areas, a non-staining solvent may be used to aid in oil or grease extraction. Any visible discoloration is evidence of oil or grease contamination.

3.5.4.2 Pre-Preparation Testing for Soluble Salts Contamination

Test surfaces for soluble salts, and wash as required, prior to abrasive blasting. Soluble salt testing is also required in paragraph PRE-APPLICATION TESTING FOR SOLUBLE SALTS CONTAMINATION as a final acceptance test of prepared surfaces after abrasive blasting, and successful completion of this phase does not negate that requirement. This phase is recommended since pre-preparation testing and washing are generally more advantageous than attempting to remove soluble salt contamination after abrasive blasting. Effective removal of soluble salts will require removal of any barrier to the steel surface, including rust. This procedure may necessitate combinations of wet abrasive blasting, high pressure water rinsing, and cleaning using a solution of water washing and soluble salts remover. The soluble salts remover shall be acidic, biodegradable, nontoxic, noncorrosive, and after application, will not interfere with primer adhesion. Delays between testing and preparation, or testing and coating application, may allow for the formation of new contamination. Use potable water, or potable water modified with soluble salt remover, for all washing or wet abrasive blasting. Test methods and equipment used in this phase are selected at the Contractor's discretion.

3.5.5 Abrasive Blasting

Abrasive blast steel surfaces to near-white metal in accordance with SSPC SP 10/NACE No. 2. Prepared surfaces shall conform to SSPC VIS 1 and shall match the prepared test-panels. Provide a 50 to 75 micron surface profile. Reject profile greater than 75 microns, discontinue abrasive blasting, and modify processes and materials to provide the specified profile. Measure surface profile in accordance with ASTM D7127, using Rmax as the measure of profile height. Record all measurements required in this standard. Measure profile at rate of three test areas for the first 100 square meters plus one test area for each additional 100 square meters or part thereof. When surfaces are reblasted for any reason, retest profile as specified. Following abrasive blasting, remove dust and debris by vacuum cleaning. Do not attempt to wipe surface clean.

3.5.6 Disposal of Used Abrasive

Dispose of used abrasive off Government property in accordance with

Federal, State, and Local mandated regulations.

3.5.7 Pre-Application Testing For Surface Contamination

3.5.7.1 Pre-Application Testing for Oil and Grease Contamination

Ensure surfaces are free of contamination as described in paragraph PRE-PREPARATION TESTING FOR OIL AND GREASE CONTAMINATION, except that only questionable areas need be checked for beading of water misted onto surface.

3.5.7.2 Pre-Application Testing for Soluble Salts Contamination

Test surfaces for chloride contamination using the Test Kit described in TEST KIT FOR MEASURING CHLORIDE, SULFATE AND NITRATE IONS ON STEEL AND COATED SURFACES. Test all surfaces at rate of three tests for the first 100 square meters plus one test for each additional 200 square meters or part thereof. Perform 30 percent of tests on bare steel at welds, divided equally between horizontal and vertical welds. One or more readings greater than 3 micrograms per square centimeter of chlorides or 10 micrograms per square centimeter of sulfates or 5 micrograms per square centimeter of nitrates is evidence of soluble salt contamination. Reject contaminated surfaces, wash as discussed in paragraph PRE-PREPARATION TESTING FOR SOLUBLE SALTS CONTAMINATION, allow to dry, and re-test until all required tests show allowable results. Reblast tested and cleaned areas as required. Label all test tubes and retain for test verification.

3.5.7.3 Pre-Application Testing for Surface Cleanliness

Apply coatings to dust free surfaces. To test surfaces, apply strip of clear adhesive tape to surface and rub onto surface with finger. When removed, the tape should show little or no dust, blast abrasive, or other contaminant. Reject contaminated surfaces and retest. Test surfaces at rate of three tests for the first 100 square meters plus one test for each additional 100 square meters or part thereof. Provide two additional tests for each failed test or questionable test. Attach test tapes to Daily Inspection Reports.

3.6 MIXING AND APPLICATION OF SEALANT AND COATING SYSTEM

3.6.1 Preparation of Sealant and Coating Materials for Application

Each of the sealant, primer, intermediate, and topcoat materials is a two-component material supplied in separate containers.

3.6.1.1 Mixing Sealant, Primer and Intermediate Coat Materials

Mix in accordance with manufacturer's instructions, which may differ for each product. Do not mix partial kits, or alter mix ratios. Mix materials in same temperature and humidity conditions specified in paragraph DELIVERY AND STORAGE. Allow mixed material to stand for the required induction time based on its temperature.

3.6.1.2 Mixing Topcoat Material

Do not mix partial kits, or alter mix ratios. Mix polyurethane coating materials in same temperature conditions specified in paragraph DELIVERY AND STORAGE. The polyurethane coating material is moisture sensitive and any introduction of moisture or water into the material during mixing or

application will shorten usable pot life. Use a mixer that does not create a vortex. Do not add solvent without specific written recommendation from the manufacturer. No induction time is required, only thorough agitation of the mixed material.

3.6.1.3 Pot Life

Apply mixed products within stated pot life for each product. Stop applying when material becomes difficult to apply in a smooth, uniform wet film. Add all required solvent at time of mixing. Do not add solvent to extend pot life. Pot life is based on standard conditions at 21 degrees C and 50 percent relative humidity. For every 10 degrees C rise in temperature, pot life is reduced by approximately half, and for every 10 degrees C drop it is approximately doubled. Usable pot life depends on the temperature of the material at the time of mixing and the sustained temperature at the time of application. Other factors such as the shape of the container and volume of mixed material may also affect pot life. Precooling or exterior icing of components for at least 24 hours to a minimum of 10 degrees C in hot climates will extend pot life. High humidity at time of mixing and application shortens pot life of the Polyurethane topcoat material. Following are approximate pot life times:

Sealant	As specified by manufacturer
Epoxy primer and intermediate materials	4 hours
Polyurethane topcoat materials	2 hours.

3.6.1.4 Application Conditions and Recoat Windows

The application condition requirements for the coating system are very time and temperature sensitive, and are intended to avoid the delamination problems frequently found on industrial structures. Plan coating application to ensure that specified temperature, humidity, and condensation conditions are met. If conditions do not allow for orderly application of sealant, primer, stripe coat, intermediate coat and topcoat, use appropriate means of controlling air and surface temperatures, as required. Partial or total enclosures, insulation, heating or cooling, or other appropriate measures may be required to control conditions to allow for orderly application of all required coats.

Maintain air and steel surface temperature between 16 and 38 degrees C during application and the first four hours of cure for epoxy coats and the first eight hours of cure for polyurethane coats. Maintain steel surface temperature more than 3 degrees C above the dew-point of the ambient air for the same period.

Use Table entitled "RECOAT WINDOWS" to determine appropriate recoat windows for each coat after the initial coat. Apply each coat during appropriate RECOAT WINDOW of preceding coat. If a RECOAT WINDOW is missed, the minimum and maximum primer and intermediate coat thickness may be adjusted to accommodate a FILL COAT, however, requirements for total epoxy coating thickness and total coating thickness will not be modified. Missing more than one RECOAT WINDOW may require complete removal of coating if maximum total coating thickness requirements cannot be achieved.

If coating is not applied during RECOAT WINDOW, or if surface temperature exceeds 49 degrees C between applications, provide GLOSS REMOVAL, apply next coat within 24 hours. If next planned coat is topcoat, apply FILL COAT if required to fill sanding marks. Sanding marks from GLOSS REMOVAL of intermediate coat reflecting through topcoat will be considered as

noncompliant. Apply FILL COAT within 24 hours of GLOSS REMOVAL, then apply topcoat within RECOAT WINDOW of FILL COAT.

RECOAT WINDOWS						
EPOXY OVER EPOXY						
Temperature degrees C	16-21	22-27	28-32	33-38	39-43	44-49
RECOAT WINDOW (Hrs.)	24-72	18-60	16-48	12-36	8-18	4-6
POLYURETHANE OVER EPOXY						
Temperature degrees C	16-21	22-27	28-32	33-38	39-43	44-49
RECOAT WINDOW (Hrs.)	24-96	24-72	16-48	12-36	10-24	8-16
POLYURETHANE OVER POLYURETHANE						
Temperature degrees C	16-21	22-27	28-32	33-38	39-43	44-49
RECOAT WINDOW (Hrs.)	8-48	6-48	4-36	3-24	2-12	1-2

The temperature ranges shown in the table above are for determining recoat windows. Choose recoat window based on the highest surface temperature that was sustained for one or more hours between coats. This applies to the entire time between coats. Measure and record air and surface temperatures on hourly basis to determine appropriate recoat windows. If surface temperature goes above 38 degrees C, measure and record temperatures every half hour.

FILL COAT - Where indicated, apply coat of intermediate coat epoxy, at 50 to 75 microns DFT, then apply next specified full coat within recoat

window of FILL COAT. A FILL COAT may be used to adjust coating thickness to comply with requirements or to fill sanding marks in intermediate coat.

GLOSS REMOVAL - Where required, hand sand in a linear fashion to remove gloss using 120-200 grit wet/dry sandpaper, followed by solvent wiping with a clean rag soaked with denatured alcohol to remove all dust. GLOSS REMOVAL of primer coat is to scarify surface and shall consist of removal of approximately 25 microns of coating. If steel is exposed during GLOSS REMOVAL, repair in accordance with paragraph PROCEDURE FOR HOLIDAY AND SPOT REPAIRS OF NEWLY APPLIED COATING. GLOSS REMOVAL of intermediate coat may include removal of up to 75 microns of coating to avoid excess thickness, prior to application of FILL COAT.

3.6.2 Amine Blush Testing of Epoxy Coat Prior to Overcoating

Test epoxy surfaces prior to application of roof joint sealant, epoxy coat, or polyurethane topcoat for amine blush contamination using the Test Kit described in paragraph TEST KIT FOR IDENTIFYING AMINE BLUSH ON EPOXY SURFACES. Test all surfaces at rate of three tests for the first 100 square meters plus one test for each additional 200 square meters or part thereof. Remove any identified contamination using an approved procedure.

3.6.3 Application of Coating System and Joint Sealant

Apply coatings in accordance with SSPC PA 1 and as specified herein. Apply coatings to surfaces that meet all stated surface preparation requirements.

After application of primer coat and prior to application of each subsequent coat, perform testing prescribed in paragraph PRE-APPLICATION TESTING FOR SURFACE CONTAMINATION, as necessary, to ensure minimal intercoat contamination. This testing may be reduced to one half of the prescribed rate for bare steel if the testing indicates no contamination when sampling is evenly distributed over surfaces being tested. If contamination is found between coats, revert to the specified testing rate. Generally, oil and grease contamination and soluble salts contamination are not encountered if subsequent coats are applied within specified recoat windows and unusual atmospheric events do not occur. Such atmospheric events as a coastal storm blowing onshore can bring unusual chloride contamination. Concern for intercoat contamination should be continually prevalent, and spot testing should be accomplished to verify satisfactory conditions. Where visual examination or spot testing indicates contamination, perform sufficient testing to verify non-contamination, or to define extent of contamination for appropriate treatment.

Apply each coat in a consistent wet film, at 90 degrees to previous coat. Ensure that primer and intermediate coat "cold joints" are no less than 150 mm from welds. Apply stripe coat by brush. For convenience, stripe coat material may be delivered by spray if followed immediately with brush-out and approved procedures include appropriate controls on thickness. Apply all other coats by spray application. Use appropriate controls to prevent airborne coating fog from drifting beyond three meters from the structure perimeter. Cover or protect all surfaces that will not be coated. The cleanliness, temperature, recoat windows, and airborne paint containment requirements may necessitate the use of enclosures, portable shelters, or other appropriate controls.

Apply coatings at the following specified thickness:

Coat	Minimum DFT (Microns)	Maximum DFT (Microns)
Primer	75	125
Intermediate	75	125
Top	50	75
Total system	200	325

3.6.3.1 Application of Primer

Apply primer coat, maintaining paint supply container height within 1 meter of the paint nozzle for applying zinc primer. Maintain constant agitation of paint pot to ensure that zinc does not settle in container.

3.6.3.2 Application of Stripe Coat

Apply a stripe coat of intermediate coat epoxy material within RECOAT WINDOW of primer, allowing sufficient dry time to allow application of intermediate coat within RECOAT WINDOW of primer. Apply by brush, working material into corners, crevices, angles, and welds, and onto outside corners and angles.

3.6.3.3 Application of Intermediate Coat

Apply intermediate coat within RECOAT WINDOW of primer coat.

3.6.3.4 Non-skid for Stairs and Top

Where non-skid is required, apply a second intermediate coat, and immediately follow with application of non-skid grit, broadcast at the rate of 2 pounds per 100 square feet, and backroll. Apply topcoat as specified.

3.6.3.5 Application of Topcoat

Make all required repairs to primer and intermediate coats as specified in paragraph entitled "Procedure for Holiday and Spot Repairs of Newly Applied Coating" prior to applying topcoat. Apply topcoat within RECOAT WINDOW of intermediate coat. The polyurethane topcoat may require multiple passes to achieve desired aesthetics and required thickness. Consult manufacturer for thinning and application procedures for anticipated temperature, humidity, and wind conditions. Touch-up blemishes and defects within recoat window of polyurethane topcoat. Retain sample of polyurethane topcoat, from the same batch used to coat structure, to make touch-ups that might be required later.

3.6.3.6 Application of Joint Sealant

Apply joint sealant to back-to-back steel joints that are less that 3/8 inches wide and are not seal welded. Apply sealant to top and bottom, or each side, of narrow joints. Apply sealant within 48 hours of application of the topcoat, and touch-up with topcoat after appropriate cure of the sealant.

3.6.3.7 Procedure for Holiday and Spot Repairs of Newly Applied Coating

Repair coating film defects at the earliest practicable time, preferably before application of the succeeding coat. Observe all requirements for soluble salts contamination, cleanliness between coats, and application conditions. Prepare defective area in accordance with SSPC SP 10/NACE No. 2, and feather coating as required to leave 100 mm of each succeeding coat feathered and abraded. Protect adjacent areas from damage and overspray. Remove dust and solvent wipe the prepared area plus an additional 100 mm beyond the prepared area with clean denatured alcohol. Apply each coat within RECOAT WINDOW of preceeding coat. Within four hours of preparation, apply zinc-rich primer to prepared steel and feather onto prepared primer. Apply intermediate coat to primed area and feather to prepared intermediate area. Apply topcoat to intermediate coat and feather to prepared topcoat. Apply each repair coat to approximate thickness of surrounding coating system.

3.6.3.8 Structure Occupancy After Coating Application

Use clean canvas or other approved shoe covers when walking on coated surfaces, regardless of curing time allowed. For heavily trafficked areas, provide cushioned mats for additional protection.

3.7 PROJECT IDENTIFICATION

At the completion of the work, stencil the following information on the tank exteriorin 3/4 to one inch Helvetica style letters of contrasting color using acrylic stencil paint:

Date exterior coated:
Project Number:
Contractor:
Address:
Coating System
Surface Prep: SSPC SP ____ Profile: _____
Primer: _____ Thickness: ____
Intermediate: _____ Thickness: ____
Topcoat: _____ Thickness: ____
Total Thickness: _____

3.8 FIELD QUALITY CONTROL

For marking of tank surfaces, use chalk for marking bare steel, and water based markers for marking coated surfaces, and remove marks prior to coating. Do not use any wax or grease based markers, or any other markers that leave a residue or stain.

3.8.1 Coating Inspector

The coating inspector shall be considered a QC Specialist and shall report to the QC Manager, as specified in Section 01 45 00.00 20 QUALITY CONTROL. The Coating Inspector shall be present during all pre-preparation testing, surface preparation, coating application, initial cure of the coating system, during all coating repair work, and during completion activities as specified in Section 01 45 00.00 20 QUALITY CONTROL. The Coating Inspector shall provide complete documentation of conditions and occurrences on the job site, and be aware of conditions and occurrences that are potentially detrimental to the coating system. The requirements for inspection listed in this Section are in addition to the

QC inspection and reporting requirements specified in Section 01 45 00.00 20 QUALITY CONTROL.

3.8.2 Field Inspection

3.8.2.1 Inspection Requirements

Perform field inspection in accordance with ASTM D3276 and the approved Coating Work Plan. Document Contractor's compliance with the approved Coating Work Plan.

Provide all tools and instruments required to perform the required testing, as well as any tools or instruments that the inspector considers necessary to perform the required inspections and tests. Document each inspection and test, including required hold points and other required inspections and tests, as well as those inspections and tests deemed prudent from on-site evaluation to document a particular process or condition, as follows:

a. Location or area;
b. Purpose (required or special);
c. Method;
d. Criteria for evaluation;
e. Results;
f. Determination of compliance;
g. List of required rework;
h. Observations.

Collect and record Environmental Conditions as described in ASTM D3276 on a 24 hour basis, as follows:

a. During surface preparation, every two hours or when changes occur;
b. During coating application and the first four days of initial cure, every hour, or when changes occur;
c. Note location, time, and temperature of the highest and lowest surface temperatures each day;
d. Use a non-contact thermometer to locate temperature extremes, then verify with contact thermometers.

Document all equipment used in inspections and testing, including manufacturer, model number, serial number, last calibration date and future calibration date, and results of on-site calibration performed.

Document Contractors compliance with the approved Coating Work Plan.

3.8.2.2 Inspection Report Forms

Develop project-specific report forms as required to report measurements, test results, and observations being complete and and conforming to contract requirements. This includes all direct requirements of the contract documents and indirect requirements of referenced documents. Show acceptance criteria with each requirement and indication of conformity of each inspected item. The data may be in any format, but must be legible and presented so that entered data can be quickly compared to the appropriate requirement.

3.8.2.3 Daily Inspection Reports

Submit one copy of daily inspection report completed each day when

performing work under this Section, to the Contracting Officer. Note all non-compliance issues, and all issues that were reported for rework in accordance with QC procedures of Section 01 45 00.00 20 QUALITY CONTROL. Each report shall be signed by the coating inspector and the QC Manager. Submit report within 24 hours of date recorded on the report.

3.8.2.4 Inspection Logbook

A continuous record of all activity related to this Section shall be maintained in an Inspection Logbook on a daily basis. The logbook shall be hard or spiral bound with consecutively numbered pages, and shall be used to record all information provided in the Daily Inspection Reports, as well as other pertinent observations and information. The Coating Inspector's Logbook that is sold by NACE is satisfactory. Submit the original Inspection Logbook to the Contracting Officer upon completion of the project and prior to final payment.

3.8.2.5 Inspection Equipment

All equipment shall be in good condition, operational within its design range, and calibrated as required by the specified standard for use of each device.

3.9 FINAL CLEANUP

Following completion of the work, remove debris, equipment, and materials from the site. Remove temporary connections to Government or Contractor furnished water and electrical services. Restore existing facilities in and around the work areas to their original condition.

TABLE 1

COATING QUALITY CONFORMANCE INSPECTION REQUIREMENTS

Table Ia - Zinc-rich Epoxy Primer Coat MIL-DTL-24441/19 Formula 159

Test	Componenent A		Component B		Mixed	
	Min.	Max.	Min.	Max.	Min.	Max.
Pigment content, percent (zinc dust)	---	---	81.5	85.5	---	---
Volatiles, percent	42.8	44.3	8.0	8.4	---	---
Non-volatile vehicle percent	53.7	57.7	8.3	8.7	---	---
Weight, Kilograms/liter	0.87	1.01	3.30	3.40	2.80	2.91

TABLE 1

COATING QUALITY CONFORMANCE INSPECTION REQUIREMENTS

Table Ia - Zinc-rich Epoxy Primer Coat MIL-DTL-24441/19 Formula 159

Test	Componenent A		Component B		Mixed	
	Min.	Max.	Min.	Max.	Min.	Max.
Weight, Pounds/gallon	7.3	8.4	27.5	28.4	23.4	24.4
Flashpoint, Degrees C	35.6	---	37.8	---	---	---
Flashpoint, Degrees F	96	---	100	---	---	---
Consistency, grams	---	---	250	500	150	300
Set to touch time, hours at 23 degrees C, 73 degrees F	---	---	---	---	---	2
Dry hard time, hours at 23 degrees C, 73 degrees F	---	---	---	---	---	8
Pot life, hours at 23 degrees C, 73 degrees F	---	---	---	---	4	---
Sag resistance, Micrometers	---	---	---	---	300	---
Sag resistance, Mils	---	---	---	---	12	---
VOC, Grams/liter	---	---	---	---	---	304
VOC, Pounds/gallon	---	---	---	---	---	2.5

NOTES: Test methods as specified in MIL-DTL-24441.

TABLE 1

COATING QUALITY CONFORMANCE INSPECTION REQUIREMENTS

Table Ib. - Epoxy Intermediate Coat MIL-DTL-24441/31 Formula 152 Type IV (White (Tinted))

Test	Componenent A		Component B		Mixed	
	Min.	Max.	Min.	Max.	Min.	Max.
Pigment content, percent	44.0	49.0	33.0	38.0	---	---
Volatiles, percent	29.0	35.0	16.0	21.0	---	---
Non-volatile vehicle percent	17.5	23.5	44.0	49.0	---	---
Coarse particles, percent	---	0.3	---	0.3	---	---
Consistency, grams	180	320	300	470	180	245
Weight, Kilograms/liter	1.39	1.45	1.29	1.35	1.34	1.4
Weight, Pounds/gallon	11.6	12.1	10.8	11.3	11.2	11.7
Set to touch time, hours at 23 degrees C, 73 degrees F	---	---	---	---	---	3
Dry hard time, hours at 23 degrees C, 73 degrees F	---	---	---	---	---	8
Fineness of grind, Hegman	4	---	4	---	---	---
Flashpoint, Degrees C	35.5	---	37.8	---	---	---
Flashpoint, Degrees F	96	---	100	---	---	---
Titanium dioxide, percent of pigment	91	---	---	---	---	---
Pot life, hours at 23 degrees C, 73 degrees F	---	---	---	---	4	---
Sag resistance, Micrometers	---	---	---	---	300	---
Sag resistance, Mils	---	---	---	---	12	---

TABLE 1

COATING QUALITY CONFORMANCE INSPECTION REQUIREMENTS

Table Ib. - Epoxy Intermediate Coat MIL-DTL-24441/31 Formula 152 Type IV (White (Tinted))

Test	Componenent A		Component B		Mixed	
	Min.	Max.	Min.	Max.	Min.	Max.
Color of dry film to approximate color of FED-STD-595 color 27778	---	---	---	---	---	Conform
Contrast ratio, at 75 micrometers, 3 mils DFT	---	---	---	---	.098	---
Gloss, 60 degree specular	---	---	---	---	35	---
VOC, Grams/liter	---	---	---	---	---	340
VOC, Pounds/gallon	---	---	---	---	---	2.8

GENERAL NOTES: Test methods as specified in MIL-DTL-24441.Where "Conform" is indicated, refer to specific requirements of MIL-DTL-24441/31.

TABLE I

COATING QUALITY CONFORMANCE INSPECTION REQUIREMENTS

Table Ic - Polyurethane TopcoatMIL-PRF-85285 Type II (White and Colors)

Test	Componenent A		Component B		Mixed	
	Min.	Max.	Min.	Max.	Min.	Max.
Moisture content, percent	---	2	---	---	---	---
Course particles, percent	---	---	---	---	---	.5
Viscosity	---	---	---	---	---	See Note 1
Fineness of grind, Hegman	---	---	---	---	7	---

TABLE I

COATING QUALITY CONFORMANCE INSPECTION REQUIREMENTS

Table Ic - Polyurethane TopcoatMIL-PRF-85285 Type II (White and Colors)

Test	Componenent A		Component B		Mixed	
	Min.	Max.	Min.	Max.	Min.	Max.
Drying to touch (See Note 2)	---	---	---	---	---	4
Dry-hard (See Note 2)	---	---	---	---	---	8
VOC, grams per liter	---	---	---	---	---	340
Color	---	---	---	---	delta E+-1.0	
Gloss 60 degree specular gloss						
Gloss	---	---	---	---	---	90
Semi-gloss	---	---	---	---	15	45
Opacity	---	---	---	---	0.95	---
Flexibility	---	---	---	---	---	Conform
Fluid resistance	---	---	---	---	---	Conform
Heat resistance (cure)	---	---	---	---	---	Conform
Solvent resistance (cure)	---	---	---	---	---	Conform
Condition in container	---	---	---	---	---	Conform
Odor	---	---	---	---	---	Conform
Lead percent	---	---	---	---	---	0.06
Cadmium percent	---	---	---	---	---	0.06
Chromium percent	---	---	---	---	---	0.00

TABLE I

COATING QUALITY CONFORMANCE INSPECTION REQUIREMENTS

Table Ic - Polyurethane TopcoatMIL-PRF-85285 Type II (White and Colors)

Test	Componenent A		Component B		Mixed	
	Min.	Max.	Min.	Max.	Min.	Max.

NOTES:
(1) Modify paragraph 3.6.4 Viscosity and Pot Life, of MIL-PRF-85285 as follows:

The viscosity of the admixed coating, when tested in accordance with ASTM D1200 through a No. 4 Ford cup, shall be as follows:

Time from mix (minimum)	Maximum time through a No. 4 Ford Cup
Initially	30 seconds
2 hours	60 seconds
4 hours	No gel

(2) Modify paragraph 3.7.1 Drying Time, of MIL-PRF-85285.
When applied by spray techniques and when tested in accordance with ASTM D1640/D1640M, the coating shall be set-to-touch within four hours and dry-hard within eight hours (see 4.6 and table I).

GENERAL NOTES:
Test methods as specified in MIL-PRF-85285, except those marked with "*".
Where "Conform" is indicated, refer to specific requirements of MIL-PRF-85285.

-- End of Section --

SECTION 10 14 00.20

INTERIOR SIGNAGE
11/12

PART 1 GENERAL

1.1 REFERENCES

The publications listed below form a part of this specification to the extent referenced. The publications are referred to in the text by basic designation only.

AMERICAN NATIONAL STANDARDS INSTITUTE (ANSI)

ANSI Z97.1	(2009; Errata 2010) Safety Glazing Materials Used in Buildings - Safety Performance Specifications and Methods of Test

U.S. GREEN BUILDING COUNCIL (USGBC)

LEED NC	(2009) Leadership in Energy and Environmental Design(tm) New Construction Rating System

U.S. NATIONAL ARCHIVES AND RECORDS ADMINISTRATION (NARA)

36 CFR 1191	Americans with Disabilities Act (ADA) Accessibility Guidelines for Buildings and Facilities; Architectural Barriers Act (ABA) Accessibility Guidelines

1.2 SUSTAINABILITY REQUIREMENTS

Materials in this technical specification may contribute towards contract compliance with sustainability requirements.

1.2.1 LEED Requirements

See Section 01 33 29 LEED DOCUMENTATION for project LEED NC recycled content, low emitting materials, optimize energy performanceand requirements.

1.3 SUBMITTALS

Government approval is required for submittals with a "G" designation; submittals not having a "G" designation are for Contractor Quality Control approval. Submittals with an "S" are for inclusion in the Sustainability Notebook, in conformance to Section 01 33 29SUSTAINABILITY REQUIREMENTS. Submit the following in accordance with Section 01 33 00 SUBMITTAL PROCEDURES:

SD-02 Shop Drawings

Detail Drawings; G

SD-03 Product Data

Installation; G
Warranty; G

SD-04 Samples

Interior Signage; G

SD-11 Closeout Submittals

LEED Documentation; S

1.4 QUALITY ASSURANCE

1.4.1 Samples

Submit interior signage samples of each of the following sign types showing typical quality, workmanship and color: Standard Room sign.

1.4.2 Detail Drawings

Submit detail drawings showing elevations of each type of sign, dimensions, details and methods of mounting or anchoring, mounting height, shape and thickness of materials, and details of construction. Include a schedule showing the location, each sign type, and message.

1.5 DELIVERY, STORAGE, AND HANDLING

Materials shall be packaged to prevent damage and deterioration during shipment, handling, storage and installation. Product shall be delivered to the jobsite in manufacturer's original packaging and stored in a clean, dry area in accordance with manufacturer's instructions.

1.6 WARRANTY

Warrant the interior signage for a period of 2 years against defective workmanship and material. Warranties shall be signed by the authorized representative of the manufacturer. Submit warranty accompanied by the document authenticating the signer as an authorized representative of the guarantor. Guarantee that the signage products and the installation are free from any defects in material and workmanship from the date of delivery.

PART 2 PRODUCTS

2.1 STANDARD PRODUCTS

Signs, plaques, directories, and dimensional letters shall be the standard product of a manufacturer regularly engaged in the manufacture of such products that essentially duplicate signs that have been in satisfactory use at least 2 years prior to bid opening. Obtain signage from a single manufacturer with edges and corners of finished letterforms and graphics true and clean.

2.2 ROOM IDENTIFICATION/DIRECTIONAL SIGNAGE SYSTEM

2.2.1 Standard Room Signs

Signs shall consist of acrylic plastic 2 mm thickness minimum conforming to ANSI Z97.1 or laminated thermosetting Type MP plastic (three-ply melamine plastic laminate with phenolic core) and shall conform to the following:

a. Units shall be frameless. Corners of signs shall be rounded to 10 mm radius.

b. Signs shall be approximately 200 mm by 200 mm. Copy shall include room name and number. Provide braille in compliance with ABA.

c. Provide pictographs for toilet room signs.

2.2.2 Type of Mounting For Signs

Surface mounted signs shall be mounted with thick closed cell vinyl foam with adhesive backing. Adhesive shall be transparent, long aging, high tech formulation on two sides of the vinyl foam.

2.2.3 Graphics

Signage graphics for modular signs shall conform to the following:

2.2.3.1 Subsurface Copy

Copy is transferred to the back face of clear acrylic sheeting forming the panel face to produce precisely formed opaque image. This method bonds all sign elements (color, graphics, lettering, Braille and substrate) into a single unit.

2.2.4 Character Proportions and Heights

Letters and numbers on signs conform to 36 CFR 1191.

2.2.5 Tactile Letters, Symbols and Braille

Raised letters and numbers on signs shall conform to 36 CFR 1191.

2.3 FABRICATION AND MANUFACTURE

2.3.1 Factory Workmanship

Holes for bolts and screws shall be drilled or punched. Drilling and punching shall produce clean, true lines and surfaces. Exposed surfaces of work shall have a smooth finish and exposed riveting shall be flush. Fastenings shall be concealed where practicable.

2.4 COLOR, FINISH, AND CONTRAST

Color shall be as indicated. Finish of all signs shall be eggshell, matte, or other non-glare finish as required in handicapped-accessible buildings.

2.5 TYPEFACE

ADA-ABA compliant font for Room Signs.

PART 3 EXECUTION

3.1 INSTALLATION

Signs shall be installed plumb and true and in accordance with approved manufacturer's instructions at locations shown on the schedule below. Mounting height and mounting location shall conform to 36 CFR 1191. Required blocking shall be installed. Signs on doors or other surfaces shall not be installed until finishes on such surfaces have been installed. Signs installed on glass surfaces shall be installed with matching blank back-up plates in accordance with manufacturer's instructions.

3.1.1 Sign Placement Schedule:

Provide a standard room sign at each interior door of the Operations Building. Use room name and number on drawing unless directed otherwise by the Contracting Officer.

3.1.2 Anchorage

Anchorage shall be in accordance with approved manufacturer's instructions. Anchorage not otherwise specified or shown shall include slotted inserts, expansion shields, and powder-driven fasteners when approved for concrete; toggle bolts and through bolts for masonry; machine carriage bolts for steel; lag bolts and screws for wood. Exposed anchor and fastener materials shall be compatible with metal to which applied and shall have matching color and finish.

3.1.3 Protection and Cleaning

Protect the work against damage during construction. Hardware and electrical equipment shall be adjusted for proper operation. Glass, frames, and other sign surfaces shall be cleaned at completion of sign installation in accordance with the manufacturer's approved instructions and the requirements of Section 01 78 23 OPERATION AND MAINTENANCE DATA, Package 1.

-- End of Section --

SECTION 10 21 13

TOILET COMPARTMENTS
01/07

PART 1 GENERAL

1.1 REFERENCES

The publications listed below form a part of this specification to the extent referenced. The publications are referred to within the text by the basic designation only.

ALUMINUM ASSOCIATION (AA)

AA DAF45	(2003; Reaffirmed 2009) Designation System for Aluminum Finishes

ASTM INTERNATIONAL (ASTM)

ASTM A123/A123M	(2013) Standard Specification for Zinc (Hot-Dip Galvanized) Coatings on Iron and Steel Products
ASTM A167	(2011) Standard Specification for Stainless and Heat-Resisting Chromium-Nickel Steel Plate, Sheet, and Strip
ASTM A336/A336M	(2010a) Standard Specification for Alloy Steel Forgings for Pressure and High-Temperature Parts
ASTM A385/A385M	(2011) Standard Practice for Providing High-Quality Zinc Coatings (Hot-Dip)
ASTM A653/A653M	(2013) Standard Specification for Steel Sheet, Zinc-Coated (Galvanized) or Zinc-Iron Alloy-Coated (Galvannealed) by the Hot-Dip Process
ASTM B221M	(2013) Standard Specification for Aluminum and Aluminum-Alloy Extruded Bars, Rods, Wire, Profiles, and Tubes (Metric)
ASTM B36/B36M	(2013) Standard Specification for Brass Plate, Sheet, Strip, and Rolled Bar
ASTM B456	(2011; E 2011) Standard Specification for Electrodeposited Coatings of Copper Plus Nickel Plus Chromium and Nickel Plus Chromium
ASTM B86	(2013) Standard Specification for Zinc and Zinc-Aluminum (ZA) Alloy Foundry and Die Castings

ASTM D6386	(2010) Standard Practice for Preparation of Zinc (Hot-Dip Galvanized) Coated Iron and Steel Product and Hardware Surfaces for Painting

INTERNATIONAL CODE COUNCIL (ICC)

ICC A117.1	(2009) Accessible and Usable Buildings and Facilities

U.S. GENERAL SERVICES ADMINISTRATION (GSA)

CID A-A-60003	(Basic) Partitions, Toilet, Complete

U.S. GREEN BUILDING COUNCIL (USGBC)

LEED BD+C	(2009; R 2010) Leadership in Energy and Environmental Design(tm) Building Design and Construction (LEED-NC)

U.S. NATIONAL ARCHIVES AND RECORDS ADMINISTRATION (NARA)

36 CFR 1191	Americans with Disabilities Act (ADA) Accessibility Guidelines for Buildings and Facilities; Architectural Barriers Act (ABA) Accessibility Guidelines

1.2 SUSTAINABILITY REPORTING

Materials in this technical specification may contribute towards contract compliance with sustainability requirements.

1.2.1 LEED REQUIREMENTS

See Section 01 33 29 SUSTAINABILITY REPORTING for project LEED BD+C low-emitting materials, recycled content, and LEED documentation requirements.

1.2.2 EPA Comprehensive Procurement Guidelines

See Section 01 33 29 SUSTAINABILITY REPORTING for requirements associated with EPA designated products.

1.3 SUBMITTALS

Government approval is required for submittals with a "G" designation; submittals not having a "G" designation are for Contractor Quality Control approval. Submittals with an "S" are for inclusion in the Sustainability Notebook, in conformance to Section 01 33 29 SUSTAINABILITY REPORTING. Submit the following in accordance with Section 01 33 00 SUBMITTAL PROCEDURES:

SD-02 Shop Drawings

Fabrication Drawings; G
Installation Drawings; G

SD-03 Product Data

Cleaning and Maintenance Instructions
Colors And Finishes
Galvanized Steel Sheet
Anchoring Devices and Fasteners
Hardware and Fittings
Brackets
Door Hardware
Environmental Data
Toilet Enclosures; (LEED BD+C)Urinal Screens; (LEED BD+C)
Pilaster Shoes; (LEED BD+C)

SD-04 Samples

Colors and Finishes; G

SD-07 Certificates

Warranty

SD-10 Operation and Maintenance Data

SD-11 Closeout Submittals

LEED Documentation
Toilet Enclosures; (LEED)

Urinal Screens; (LEED)
Pilaster Shoes; (LEED)

1.4 REGULATORY REQUIREMENTS

Conform to ICC A117.1 code for access for the handicapped operation of toilet compartment door and hardware.

1.5 DELIVERY, STORAGE, AND HANDLING

Deliver materials in the manufacturer's original unopened packages with the brand, item identification, and project reference clearly marked. Store components in a dry location that is adequately ventilated; free from dust, water, other contaminants, and damage during delivery, storage, and construction.

1.6 WARRANTY

Provide certification or warranties that metal toilet partitions will be free of defects in materials, fabrication, finish, and installation and will remain so for a period of not less than 3 years after completion.

PART 2 PRODUCTS

2.1 SYSTEM REQUIREMENTS

Provide a complete and usable toilet partition system, including toilet enclosures, room entrance screens, urinal screens, system of panels, hardware, and support components. Comply with EPA requirements in accordance with Section 01 33 29 SUSTAINABILITY REPORTING and Affirmative Procurement guidelines. Furnish the partition system from a single manufacturer, with a standard product as shown in the most recent catalog

data. Submit Fabrication Drawings for metal toilet partitions and urinal screens consisting of fabrication and assembly details to be performed in the factory. Submit manufacturer's Cleaning and Maintenance Instructions with Fabrication Drawings for review.

2.1.1 Sustainable Design Requirements

2.1.1.1 Environmental Data

Submit documentation indicating percentage of post-industrial and post-consumer recycled content per unit of product. Indicate relative dollar value of recycled content products to total dollar value of products included in project.

2.2 MATERIALS

2.2.1 Galvanized Steel Sheet

Provide galvanized steel sheet cold-rolled, stretcher-level, commercial quality material, conforming to ASTM A653/A653M. Conform surface preparation of material for painting to ASTM D6386, Method A.

2.2.2 Sound-Deadening Cores

Provide sound deadening consisting of treated kraft paper honeycomb cores with a cell size of not more than 25 mm. Resin-material content shall weigh not less than 11 percent of the finished core weight. Expanded cores shall be faced on both sides with kraft paper.

2.2.3 Anchoring Devices and Fasteners

Provide steel anchoring devices and fasteners hot-dipped galvanized after fabrication, in conformance with ASTM A385/A385M and ASTM A123/A123M. Conceal all galvanized anchoring devices.

2.2.4 Brackets

Wall brackets shall be two-ear panel brackets, T-style, 25 mm stock. Provide stirrup style panel-to-pilaster brackets.

2.2.5 Hardware and Fittings

2.2.5.1 General Requirements

Conform hardware for the toilet partition system to CID A-A-60003 for the specified type and style of partitions. Provide hardware finish highly resistant to alkalis, urine, and other common toilet room acids. Comply latching devices and hinges for handicap compartments with 36 CFR 1191; provide stainless steel devices and hinges with door latches that operate without either tight grasping or twisting of the wrist of the operator. Submit three samples of each item, including anchoring devices and fasteners. Approved hardware samples may be installed in the work if properly identified.

Material	Conformance Standard

Cold-rolled sheet steel	ASTM A336/A336M, commercial quality
Zinc-base alloy	ASTM B86, Alloy AC41-A
Brass	ASTM B36/B36M, Alloy C26800
Aluminum	ASTM B221M
Corrosion-resistant steel	ASTM A167, Type 304

2.2.5.2 Finishes

a. Chrome plating shall conform to ASTM B456.

d. Corrosion-resistant steel shall have a No. 4 finish.

e. Exposed fasteners shall match the hardware and fittings.

2.2.6 Door Hardware

2.2.6.1 Hinges

Hinges shall be adjustable to hold in-swinging doors open at any angle up to 90 degrees and outswinging doors to 10 degrees. Provide self-lubricating hinges with the indicated swing. Hinges shall be the cutout-insert type and have the following type of return movement:

a. Gravity return movement

2.2.6.2 Latch and Pull

Latch and pull shall be a combination rubber-faced door strike and keeper equipped with emergency access.

2.2.6.3 Coat Hooks

Coat hooks shall be combination units with hooks and rubber tipped pins.

2.3 PARTITION PANELS AND DOORS

Fabricate partition panels and doors not less than 25 mm thick with face sheets not less than 1.006 mm thick.

2.3.1 Toilet Enclosures

Conform toilet enclosures to CID A-A-60003, Type I, Style C, overhead braced. Furnish width, length, and height of toilet enclosures as shown. Provide a width of 25 mm. Finish surface of panels shall be painted metal, Finish 1; water resistant; graffiti resistant; non-absorbent; See Section 01 33 29 SUSTAINABILITY REPORTING for cumulative total recycled content requirements. Reinforce panels indicated to receive toilet paper holders or grab bars for mounting of the items required. Provide grab bars to withstand a bending stress, shear stress, shear force, and a tensile force induced by 1112 N. Grab bars shall not rotate within their fittings.

2.3.2 Urinal Screens

Conform urinal screens to CID A-A-60003, Type III, Style C, overhead braced. Provide finish for surface of screens as painted metal, Finish 1; water resistant; graffiti resistant; non-absorbent; See Section 01 33 29 SUSTAINABILITY REPORTING for cumulative total recycled content requirements. This item may contain post-consumer or post-industrial recycled content. Furnish width and height of urinal screens as shown. Provide thickness of 25 mm. Secure wall hung urinal screens with a minimum of three wall stirrup brackets. Fabricate screens from the same types of panels and pilasters as the toilet partitions. Use corrosion-resistant steel fittings and fasteners.

2.4 OVERHEAD-BRACED PARTITIONS

Pilasters shall be not less than 31.75 mm thick with face sheets not less than 1.0 mm thick. Provide anchoring device at the bottom of the pilaster consisting of a channel-shaped floor stirrup fabricated from not less than 1.6 mm thick material and a leveling bolt. Secure the stirrup to the pilaster with not less than a 4.76 mm bolt and nut after the pilaster is leveled. Secure the stirrup to the floor with not less than two lead expansion shields and sheetmetal screws. Fabricate overhead brace from a continuous extruded aluminum tube not less than 25.4 mm wide by 38.1 mm high, 3.2 mm wall thickness. Finish shall be AA-C22A31 in accordance with AA DAF45. Set and secure brace into the top of each pilaster. Fabricate 76.2 mm high trim piece at the floor from not less than 0.76 mm thick corrosion-resistant steel.

2.5 PILASTER SHOES

Provide shoes at pilasters to conceal floor-mounted anchorage. Pilaster shoes shall be stainless steel. See Section 01 33 29 SUSTAINABILITY REPORTING for cumulative total recycled content requirements. Height shall be 76 mm.

2.6 HARDWARE

Hardware for the toilet partition system shall conform to CID A-A-60003 for the specified type and style of partitions. Hardware shall be pre-drilled by manufacturer. Hardware finish shall be highly resistant to alkalis, urine, and other common toilet room acids. Hardware shall include: chrome plated non ferrous cast pivot hinges, gravity type, adjustable for door close positioning; nylon bearings; black anodized aluminum door latch; door strike and keeper with rubber bumper; and cast alloy chrome plated coat hook and bumper. Latching devices and hinges for handicap compartments shall comply with 36 CFR 1191 and shall be c stainless steel door latches that operate without either tight grasping or twisting of the wrist of the operator. Screws and bolts shall be stainless steel, tamper proof type. Wall mounting brackets shall be continuous, full height, stainless steel, in accordance with toilet compartment manufacturer's instructions. Floor-mounted anchorage shall consist of corrosion-resistant anchoring assemblies with threaded rods, lock washers, and leveling adjustment nuts at pilasters for structural connection to floor.

2.7 COLORS AND FINISHES

2.7.1 Colors

Provide manufacturer's standard color charts for color of finishes for toilet partition system components. Submit three samples showing a finished edge on two adjacent sides and core construction, each not less than 304.8 mm square

2.7.2 Finishes No. 1 Through No. 3

Conform partitions, panels, screen, and door finishes to CID A-A-60003 finished with Finish No. 1, baked enamel.

PART 3 EXECUTION

3.1 PREPARATION

Take field measurements prior to the preparation of drawing and fabrication to ensure proper fits. Verify that field measurements, surfaces, substrates and conditions are as required, and ready to receive work. Verify correct spacing of plumbing fixtures. Verify correct location of built in framing, anchorage, and bracing. Report in writing to Contracting Officer prevailing conditions that will adversely affect satisfactory execution of the work of this section. Do not proceed with work until unsatisfactory conditions have been corrected.

3.2 METAL PARTITION FABRICATION

a. Fabricate metal Partition Panels, doors, screens, and pilasters required for the project from galvanized-steel face sheets with formed edges. Face sheets shall be pressure-laminated to the sound-deadening core with edges sealed with a continuous locking strip and corners mitered and welded. Ground all welds smooth. Provide concealed reinforcement for installation of hardware, fittings, and accessories. Surface of face sheets shall be smooth and free from wave, warp, or buckle.

b. Before application of an enamel coating system, solvent-clean galvanized-steel surfaces to remove processing compounds, oils, and other contaminants harmful to coating-system adhesion. After cleaning,coat the surfaces with a metal-pretreatment phosphate coating. After pretreatment, finish exposed galvanized-steel surfaces with a baked-enamel coating system as specified.

c. Provide an enamel coating system consisting of a factory-applied baked acrylic enamel coating system. Coating system shall be a durable, washable, stain-resistant, mar-resistant finish.

3.3 INSTALLATION

Install partitions rigid, straight, plumb, and level, with the panels centered between the fixtures. Provide a panel clearance of not more than 13 mm and secure the panels to walls and pilasters with not less than two wall brackets attached near the top and bottom of the panel. Locate wall brackets so that holes for wall bolts occur in masonry or tile joints. Secure Panels to pilasters with brackets matching the wall brackets. Provide for adjustment due to minor floor variations. Locate head rail joints at pilaster center lines. Install adjacent components for

consistency of line and plane. Equip each door with hinges, one door latch, and one coat hook and bumper. Align hardware to uniform clearance at vertical edges of doors.

a. Secure panels to hollow plastered walls with toggle bolts using not less than M6x1 screws of the length required for the wall thickness. Toggle bolts shall have a load-carrying strength of not less than 2668.9 N per anchor.

b. Secure panels to ceramic tile on hollow plastered walls or hollow concrete-masonry walls with toggle bolts using not less than M6x1 screws of the length required for the wall thickness. Toggle bolts shall have a load-carrying strength of not less than 2668.9 N per anchor.

c. Secure panels to solid masonry or concrete with lead or brass expansion shields designed for use with not less than M6x1 screws, with a shield length of not less than 38.1 mm. Expansion shields shall have a load-carrying strength of not less than 2668.9 N per anchor.

d. Submit Installation Drawings for metal toilet partitions and urinal screens showing plans, elevations, details of construction, hardware, reinforcing and blocking, fittings, mountings and escutcheons. Indicate on drawings the type of partition, location, mounting height, cutouts, and reinforcement required for toilet-room accessories.

3.4 FLOOR-ANCHORED PARTITIONS

Secure pilasters to the floor with the anchorage device specified. Make all leveling devices readily accessible for leveling, plumbing, and tightening the installation. Level tops of doors with tops of pilasters when doors are in a closed position. Expansion shields shall have a minimum 50.8 mm penetration into the concrete slab.

3.5 OVERHEAD-BRACED PARTITIONS

Secure pilasters to the floor with the anchorage device specified. Make all leveling devices readily accessible for leveling, plumbing, and tightening the installation. Secure overhead brace to the pilaster face with not less than two fasteners per face. Expansion shields shall have a minimum 50.8 mm penetration into the concrete slab. Make tops of doors parallel with the overhead brace when doors are in a closed position.

3.6 FINAL ADJUSTMENT

After completion of the installation, make final adjustments to the pilaster-leveling devices, door hardware, and other working parts of the partition assembly. Doors shall have a uniform vertical edge clearance of approximately 5 mm and shall rest open at approximately 30 degrees when unlatched.

3.7 CLEANING

Baked enamel finish shall be touched up with the same color of paint that was used for the finish. Clean all surfaces of the work, and adjacent surfaces soiled as a result of the work, in an approved manner compliant

with the manufacturer's recommended cleaning and protection from damage procedures until accepted. Remove all equipment, tools, surplus materials, and work debris from the site.

-- End of Section --

THIS PAGE HAS BEEN INTENTIONALLY LEFT BLANK

SECTION 10 28 13

TOILET ACCESSORIES
07/06

PART 1 GENERAL

1.1 REFERENCES

The publications listed below form a part of this specification to the extent referenced. The publications are referred to within the text by the basic designation only.

ASTM INTERNATIONAL (ASTM)

ASTM C1036	(2010; E 2012) Standard Specification for Flat Glass

U.S. GREEN BUILDING COUNCIL (USGBC)

LEED NC	(2009) Leadership in Energy and Environmental Design(tm) New Construction Rating System

1.2 SUSTAINABILITY REQUIREMENTS

Materials in this technical specification may contribute towards contract compliance with sustainability requirements. See Section 01 33 29 LEED DOCUMENTATION for project LEED NC recycled content, and optimizing energy performance requirements.

1.3 SUBMITTALS

Government approval is required for submittals with a "G" designation; submittals not having a "G" designation are for Contractor Quality Control approval. Submittals with an "S" are for inclusion in the Sustainability Notebook, in conformance to Section 01 33 29 SUSTAINABILITY REQUIREMENTS. Submit the following in accordance with Section 01 33 00 SUBMITTAL PROCEDURES:

SD-03 Product Data

Finishes; G
Accessory Items; G

SD-11 Closeout Submittals

LEED Documentation

1.4 DELIVERY, STORAGE, AND HANDLING

Wrap toilet accessories for shipment and storage, then deliver to the jobsite in manufacturer's original packaging, and store in a clean, dry area protected from construction damage and vandalism.

1.5 WARRANTY

Provide manufacturer's standard performance guarantees or warranties that extend beyond a 1 year period.

PART 2 PRODUCTS

2.1 MANUFACTURED UNITS

Provide toilet accessories where indicated in accordance with paragraph SCHEDULE. Provide each accessory item complete with the necessary mounting plates of sturdy construction with corrosion resistant surface.

2.1.1 Anchors and Fasteners

Provide anchors and fasteners capable of developing a restraining force commensurate with the strength of the accessory to be mounted and suited for use with the supporting construction. Provide tamperproof design exposed fasteners with finish to match the accessory.

2.1.2 Finishes

Except where noted otherwise, provide the following finishes on metal:

Metal	Finish
Stainless steel	No. 4 satin finish
Carbon steel, copper alloy, and brass	Chromium plated, bright

2.2 ACCESSORY ITEMS

Conform to the requirements for accessory items specified below. Submit fasteners proposed for use for each type of wall construction, mounting, operation, and cleaning instructions and one sample of each other accessory proposed for use. Incorporate approved samples into the finished work, provided they are identified and their locations noted. Submit certificate for each type of accessory specified, attesting that the items meet the specified requirements.

2.2.1 Grab Bar (GB)

Provide an 18 gauge, 32 mm grab bar OD Type 304 stainless steel. Provide form and length for grab bar as indicated. Provide concealed mounting flange. Provide grab with peened non-slip surface. Furnish installed bars capable of withstanding a 2.225 kN vertical load without coming loose from the fastenings and without obvious permanent deformation. Allow 38 mm space between wall and grab bar.

2.2.2 Mirrors, Glass (MG)

Provide Type I transparent flat type, Class 1-clear glass for mirrors. Glazing Quality q1 6 mm thick conforming to ASTM C1036. Coat glass on one surface with silver coating, copper protective coating, and mirror backing paint. Provide highly adhesive pure silver coating of a thickness which provides reflectivity of 83 percent or more of incident light when viewed through 6 mm thick glass, free of pinholes or other defects. Provide

copper protective coating with pure bright reflective copper, homogeneous without sludge, pinholes or other defects, of proper thickness to prevent "adhesion pull" by mirror backing paint. Provide mirror backing paint with two coats of special scratch and abrasion-resistant paint and baked in uniform thickness to provide a protection for silver and copper coatings which will permit normal cutting and edge fabrication.

2.2.3 Paper Towel Dispenser (PTD)

Provide paper towel dispenser for rolls of paper towels constructed of a minimum Type 304 stainless steel, surface mounted. Furnish tumbler key lock locking mechanism.

2.2.4 Sanitary Napkin Disposer (SND)

Construct a Type 304 stainless steel sanitary napkin disposal with removable leak-proof receptacle for disposable liners. Provide fifty disposable liners of the type standard with the manufacturer. Retain receptacle in cabinet by tumbler lock. Provide disposer with a door for inserting disposed napkins, surface mounted.

2.2.5 Shower Curtain (SC)

Provide shower curtain, size to suit conditions. Provide anti-bacterial nylon/vinyl fabric curtain. Furnish ,as selected, color, white.

2.2.6 Shower Curtain Rods (SCR)

Provide Type 304 stainless steel shower curtain rods 32 mm OD by 1.24 mm minimum straight to meet installation conditions.

2.2.7 Soap Dispenser (SD)

Provide soap dispenser surface mounted, liquid type consisting of a vertical Type 304 stainless steel tank with holding capacity of 1.2 L with a corrosion-resistant all-purpose valve that dispenses liquid soaps, lotions, detergents and antiseptic soaps.

2.2.8 Towel Pin (TP)

Provide towel pin with concealed wall fastenings, and a pin integral with or permanently fastened to wall flange with maximum projection of 100 mm. Provide satin finish.

2.2.9 Toilet Tissue Dispenser (TTD)

Furnish Type II - surface mounted toilet tissue holder with two rolls of standard tissue mounted horizontally . Provide stainless steel, satin finish cabinet.

2.2.10 Folding Shower Seat (FSS)

Folding shower seat shall have a frame constructed of type-304 satin finish stainless steel, 16-gauge, 32 mm square tubing, and 18-gauge, 25 mm diameter seamless tubing. Seat shall be constructed of one-piece, 13 mm thick water-resistant, ivory colored solid phenolic with black edge. Clearance between back of shower seat and wall shall be 38 mm to comply with ADA Accessibility Guidelines (ADAAG). Seat supports shall not come into contact with the floor. Seat shall be able to lock in upright

position when not in use. Seat shall be attached to wall by two 75 mm diameter mounting flanges constructed of type-304, 5 mm thick stainless steel with satin finish. Manufacturer's service and parts manual shall be provided to building owner/manager upon completion of project.

2.2.11 Mop and Broom Holder (MH)

Stainless steel with grip jaw cam mechanism securing 3 mop or broom handles. Also includes hooks and storage shelf.

PART 3 EXECUTION

3.1 INSTALLATION

Provide the same finish for the surfaces of fastening devices exposed after installation as the attached accessory. Provide oval exposed screw heads. Install accessories at the location and height indicated. Protect exposed surfaces of accessories with strippable plastic or by other means until the installation is accepted. After acceptance of accessories, remove and dispose of strippable plastic protection. Coordinate accessory manufacturer's mounting details with other trades as their work progresses. Use sealants for brackets, plates, anchoring devices and similar items in showers (a silicone or polysulfide sealant) as they are set to provide a watertight installation. After installation, thoroughly clean exposed surfaces and restore damaged work to its original condition or replace with new work.

3.1.1 Recessed Accessories

Fasten accessories with wood screws to studs, blocking or rough frame in wood construction. Set anchors in mortar in masonry construction. Fasten to metal studs or framing with sheet metal screws in metal construction.

3.1.2 Surface Mounted Accessories

Mount on concealed backplates, unless specified otherwise. Conceal fasteners on accessories without backplates. Install accessories with sheet metal screws or wood screws in lead-lined braided jute, PTFE or neoprene sleeves, or lead expansion shields, or with toggle bolts or other approved fasteners as required by the construction. Install backplates in the same manner, or provide with lugs or anchors set in mortar, as required by the construction. Fasten accessories mounted on gypsum board and plaster walls without solid backing into the metal or wood studs or to solid wood blocking secured between wood studs, or to metal backplates secured to metal studs.

3.2 CLEANING

Clean material in accordance with manufacturer's recommendations. Do not use alkaline or abrasive agents. Take precautions to avoid scratching or marring exposed surfaces.

3.3 SCHEDULE

On drawings.

-- End of Section --

SECTION 10 44 16

FIRE EXTINGUISHERS
05/12

PART 1 GENERAL

1.1 REFERENCES

The publications listed below form a part of this specification to the extent referenced. The publications are referred to within the text by the basic designation only.

INTERNATIONAL CODE COUNCIL (ICC)

ICC IFC	(2012) International Fire Code

NATIONAL FIRE PROTECTION ASSOCIATION (NFPA)

NFPA 1	(2015) Fire Code
NFPA 10	(2013) Standard for Portable Fire Extinguishers
NFPA 101	(2015) Life Safety Code

U.S. NATIONAL ARCHIVES AND RECORDS ADMINISTRATION (NARA)

29 CFR 1910.157	(2003) Portable Fire Extinguishers

UNDERWRITERS LABORATORIES (UL)

UL 299	(2012) Dry Chemical Fire Extinguishers

1.2 SUBMITTALS

Government approval is required for submittals with a "G" designation; submittals not having a "G" designation are for Contractor Quality Control approval. Submittals with an "S" are for inclusion in the Sustainability Notebook, in conformance to Section 01 33 29 SUSTAINABILITY REPORTING. Submit the following in accordance with Section 01 33 00 SUBMITTAL PROCEDURES:

SD-01 Preconstruction Submittals

Manufacturer's Data; G

SD-02 Shop Drawings

Cabinets; G

SD-03 Product Data

Fire Extinguishers; G

Cabinets; G

SD-07 Certificates

Fire Extinguishers; G

Manufacturer's Warranty with Inspection Tag; G

1.3 DELIVERABLES

1.4 DELIVERY, HANDLING, AND STORAGE

Protect materials from weather, soil, and damage during delivery, storage, and construction.

Deliver materials in their original packages, containers, or bundles bearing the brand name and the name and type of the material.

1.5 WARRANTY

Guarantee that Fire Extinguishers are free of defects in materials, fabrication, finish, and installation and that they will remain so for a period of not less than 2 years after completion.

PART 2 PRODUCTS

Submit fabrication drawings consisting of fabrication and assembly details performed in the factory and product data for the following items: Fire Extinguishers; Accessories, Cabinets, Wall Brackets.

2.1 TYPES

Submit certificates that show Fire Extinguishers comply with local codes and regulations.

Provide Fire Extinguishers conforming to NFPA 10. Provide quantity and placement in compliance with the applicable sections of ICC IFC, Section 1414 and ICC IFC, Section 906, NFPA 1, NFPA 101, and 29 CFR 1910.157.

Provide dry chemical type fire extinguishers compliant with UL 299.

Submit Manufacturer's Data for each type of Fire Extinguisher required, detailing all related Cabinet, Wall Mounting and Accessories information, complete with Manufacturer's Warranty with Inspection Tag.

2.2 MATERIAL

Provide corrosion-resistant steelextinguisher shell.

2.3 SIZE

2.3 kilogram extinguishers.

2.4 CABINETS

2.4.1 Material

Provide enameled steel cabinets.

2.4.2 Type

Provide surface type cabinets where indicated.

2.4.3 Size

Dimension cabinets to accommodate the specified fire extinguishers.

2.5 WALL BRACKETS

Provide wall-hook fire extinguisher wall brackets where indicated.

Provide wall bracket and accessories as approved.

PART 3 EXECUTION

3.1 INSTALLATION

Install Fire Extinguishers where indicated on the drawings. Verify exact locations prior to installation.

Comply with the manufacturer's recommendations for all installations.

Provide extinguishers which are fully charged and ready for operation upon installation. Provide extinguishers complete with Manufacturer's Warranty with Inspection Tag attached.

3.2 ACCEPTANCE PROVISIONS

3.2.1 Repairing

Remove and replace damaged and unacceptable portions of completed work with new work at no additional cost to the Government.

Submit Replacement Parts list indicating specified items replacement part, replacement cost, and name, address and contact for replacement parts distributor.

3.2.2 Cleaning

Clean all surfaces of the work, and adjacent surfaces which are soiled as a result of the work. Remove from the site all construction equipment, tools, surplus materials and rubbish resulting from the work.

-- End of Section --

THIS PAGE HAS BEEN INTENTIONALLY LEFT BLANK

SECTION 10 51 13

METAL LOCKERS
05/11

PART 1 GENERAL

1.1 REFERENCES

The publications listed below form a part of this specification to the extent referenced. The publications are referred to within the text by the basic designation only.

ASTM INTERNATIONAL (ASTM)

ASTM A653/A653M	(2013) Standard Specification for Steel Sheet, Zinc-Coated (Galvanized) or Zinc-Iron Alloy-Coated (Galvannealed) by the Hot-Dip Process
ASTM A924/A924M	(2014) Standard Specification for General Requirements for Steel Sheet, Metallic-Coated by the Hot-Dip Process
ASTM B456	(2011; E 2011) Standard Specification for Electrodeposited Coatings of Copper Plus Nickel Plus Chromium and Nickel Plus Chromium
ASTM D6386	(2010) Standard Practice for Preparation of Zinc (Hot-Dip Galvanized) Coated Iron and Steel Product and Hardware Surfaces for Painting

U.S. GENERAL SERVICES ADMINISTRATION (GSA)

FS AA-L-00486	(Rev J) Lockers, Clothing, Steel

1.2 SUBMITTALS

Government approval is required for submittals with a "G" designation; submittals not having a "G" designation are for Contractor Quality Control approval. Submittals with an "S" are for inclusion in the Sustainability Notebook, in conformance to Section 01 33 29 SUSTAINABILITY REPORTING. Submit the following in accordance with Section 01 33 00 SUBMITTAL PROCEDURES:

SD-02 Shop Drawings

Types; G

Location; G

Installation

Numbering system

SD-03 Product Data

Material; G

FinishColor chips; G1.3 DELIVERY, HANDLING, AND STORAGE

Deliver lockers and associated materials in their original packages, containers, or bundles bearing the manufacturer's name and the name of the material. Protect from weather, soil, and damage during delivery, storage, and construction.

1.4 FIELD MEASUREMENTS

To ensure proper fits, make field measurements prior to the preparation of drawings and fabrication. Verify correct location

1.5 QUALITY ASSURANCE

1.5.1 Color Chips

Provide a minimum of three color chips, not less than 75 mm square, of each color indicated.

Government may request performance-characteristic tests on assembled lockers. Tests and results must conform to FS AA-L-00486. Lockers not conforming will be rejected.

PART 2 PRODUCTS

2.1 TYPES

Locker must have the following type and size in the location and quantities indicated. Locker finish colors will be as scheduled.

2.1.1 Double-Tier

Double-tier lockers must be as follows:

Type DTC-1: Double-tier locker 305 millimeter wide, 305 millimeter deep, and 1830 millimeter high, attached to a 150 millimeter high closed base

2.2 MATERIAL

2.2.1 Galvanized Steel Sheet

ASTM A653/A653M and ASTM A924/A924M, commercial quality, minimized spangle, galvanized steel sheet with not less than Z275 zinc coating. Prepare surface of sheet for painting in accordance with ASTM D6386, Method A. Minimum uncoated sheet thickness as specified.

2.2.2 Chromium Coating

Nickel and chromium electrodeposited on the specified base metal. Conform to ASTM B456, SC-3, as applicable to the base metal.

2.2.3 Finish

FS AA-L-00486.

2.2.3.1 Color

As indicated on drawings.

2.3 COMPONENTS

2.3.1 Built-In Locks

Built-in locks are not required.

2.3.2 Coat Hooks

FS AA-L-00486, chromium plated.

2.3.3 Door Handles

FS AA-L-00486. Provide zinc alloy or steel handles with a chromium coating. Provide ABA compliant handles.

2.3.4 Doors

FS AA-L-00486, not less than 1.5 mm thick steel sheet.

2.3.4.1 Hinges

In addition to the requirements of FS AA-L-00486, provide 5-knuckle hinges, minimum 50 mm high. Fabricate knuckle hinges from not less than 2 mm thick steel sheet. A full height piano hinge may be provided if standard with the manufacturer. Weld or bolt hinges to the door frame. Weld, bolt, or rivet hinges to the door.

2.3.4.2 Latching Mechanisms

FS AA-L-00486.

2.3.5 Latch Strikes

FS AA-L-00486. Fabricate from not less than 2 mm thick steel sheet, except latch strike may be continuous from top to bottom and fabricated as part of the door framing.

2.3.6 Silencers

FS AA-L-00486.

2.3.7 Back and Side Panels, Tops, and Bottoms

FS AA-L-00486, not less than 1.2 mm thick steel sheet.

2.3.8 Shelves

FS AA-L-00486. Fabricate from not less than 1.5 mm thick steel sheet.

2.3.9 Base Panels

FS AA-L-00486.

2.3.10 Number Plates

FS AA-L-00486. Aluminum. Provide consecutive numbers from 1 to total.

2.3.11 Fastening Devices

Provide bolts, nuts, and rivets as specified in FS AA-L-00486.

PART 3 EXECUTION

3.1 ASSEMBLY AND INSTALLATION

Assemble lockers according to the locker manufacturer's instructions. Align lockers horizontally and vertically. Secure lockers to wall and base with screws as indicated. Bolt adjacent lockers together. Adjust doors to operate freely without sticking or binding and to ensure they close tightly.

3.2 NUMBERING SYSTEM

Install number plates on lockers consecutively with odd numbers on top and even numbers on bottom.

3.3 FIELD QUALITY CONTROL

3.3.1 Testing

Government may request performance-characteristic tests on assembled lockers in accordance with FS AA-L-00486. Lockers not conforming will be rejected.

3.3.2 Repairing

Remove and replace damaged and unacceptable portions of completed work with new.

3.3.3 Cleaning

Clean surfaces of the work, and adjacent surfaces soiled as a result of the work, in an approved manner. Remove equipment, surplus materials, and rubbish from the site.

-- End of Section --

SECTION 12 24 13

ROLLER WINDOW SHADES
08/10

PART 1 GENERAL

1.1 GENERAL REQUIREMENTS

Provide roller window shades, complete with necessary brackets, fittings, and hardware at all windows in the operations building. Mount and operate equipment in accordance with manufacturer's instructions. Windows to receive a shade shall be completely covered.

a. Submit drawings showing plans, elevations, sections, product details, installation details, operational clearances, wiring diagrams and relationship to adjacent work. Include the use of same room designations as indicated on the drawings.

b. Provide manufacturer's data composed of catalog cuts, brochures, product information, and operating and maintenance instructions on each product to be used. Include styles, profiles and features.

c. Furnish samples of each type and color of roller shade fabric and roller shade channel. Shade material shall be minimum 150 by 150 mm in size. Mark face of material to indicate interior faces.

d. Submit fire resistance data, flame spread and smoke contribution data.

1.2 REFERENCES

The publications listed below form a part of this specification to the extent referenced. The publications are referred to in the text by basic designation only.

ASTM INTERNATIONAL (ASTM)

ASTM G21	(2013) Determining Resistance of Synthetic Polymeric Materials to Fungi

NATIONAL FIRE PROTECTION ASSOCIATION (NFPA)

NFPA 701	(2010) Standard Methods of Fire Tests for Flame Propagation of Textiles and Films

U.S. GREEN BUILDING COUNCIL (USGBC)

LEED BD+C	(2009; R 2010) Leadership in Energy and Environmental Design(tm) Building Design and Construction (LEED-NC)

1.3 SUSTAINABILITY REPORTING

Materials in this technical specification may contribute towards contract compliance with sustainability requirements. See Section 01 33 29 SUSTAINABILITY REPORTING for project LEED BD+C recycled content, low

emitting materials, optimize energy performance, controllability of systems - lighting, daylight, views, recycled content and LEED documentation requirements.

1.4 SUBMITTALS

Government approval is required for submittals with a "G" designation; submittals not having a "G" designation are for Contractor Quality Control approval. Submittals with an "S" are for inclusion in the Sustainability Notebook, in conformance to Section 01 33 29 SUSTAINABILITY REPORTING. Submit the following in accordance with Section 01 33 00 SUBMITTAL PROCEDURES

SD-02 Shop Drawings

Installation; G

SD-03 Product Data

Window Shades; G

SD-04 Samples

Window Shades; G

SD-06 Test Reports

Window Shades

SD-08 Manufacturer's Instructions

Window Shades

SD-10 Operation and Maintenance Data

Window Shades

SD-11 Closeout Submittals

LEED Documentation

1.5 QUALITY ASSURANCE

1.5.1 Qualifications

1.5.1.1 Installer's Qualifications

Installer trained and certified by the manufacturer with a minimum of ten years experience in installing products comparable to those specified in this section.

1.5.2 Flammability Requirements

Passes in accordance with NFPA 701 small and large-scale vertical burn. Materials tested shall be identical to products proposed for use.

1.5.3 Anti-Microbial Requirements

'No Growth' per ASTM G21 results for fungi ATCC9642, ATCC 9644, ATCC9645.

1.6 DELIVERY, STORAGE, AND HANDLING

Deliver components to the jobsite in the manufacturer's original packaging with the brand or company name, item identification, and project reference clearly marked. Store components in a dry location that is adequately ventilated and free from dust, water, or other contaminants and has easy access for inspection and handling. Store materials flat in a clean dry area with temperature maintained above 10 degrees C. Do not open containers until needed for installation unless verification inspection is required.

1.7 WARRANTY

Provide 10 year minimum limited warranty.

PART 2 PRODUCTS

2.1 WINDOW SHADES

Roller tube shall operate smoothly and be of sufficient diameter and thickness to prevent excessive deflection. Provide brackets that are appropriate for inside mount. The shade cloth shall meet the performance described in NFPA 701, small scale test. Treat steel features for corrosion resistance.

2.1.1 Light Filtering Shades

Provide light filtering window shades to conform with the following:

a. Roller tube shall be extruded aluminum or steel. Diameter, wall thickness, and material to be selected by the manufacturer to accommodate the shade size. Provide roller idler assembly of molded nylon and zinc-plated steel pin. Sliding pin shall allow easy installation and removal of roller. Fabric shall be connected to the roller tube with double sided adhesive specifically developed to attach coated textiles to metal to eliminate horizontal impressions in fabric or attached with a spline lock system.

b. Fascia shall be L-shaped aluminum extrusion to conceal shade roller and hardware that snaps onto end caps without requiring exposed fasteners of any kind. Fascia can be mounted continuously across two or more shade bands.

c. End caps shall be stamped steel with universal design suitable for mounting to window mullions. Provide size compatible with roller size. End cap covers shall match fascia/headbox finish.

d. Provide hardware that allows for field adjustment or removal of shade roller tube and other operable hardware component without requiring removal of brackets and end or center supports. Provide hardware system that allows for operation of multiple shade bands by a single operator. Connectors shall be offset to assure alignment from the first to the last shade band. Provide shade hardware constructed of minimum 3 mm thick plated steel or heavier as required to support 150 percent of the full weight of each shade.

e. Manual Operated Chain Drive Hardware shall provide for universal, regular and offset drive capacity, allowing drive chain to fall at

front, rear or non-offset for all shade drive end brackets. Universal offset shall be adjustable for future change. Provide positive mechanical engagement of drive mechanism to shade roller tube. The drive bracket shall be fully integrated with all accessories. Drive chain shall be #10 stainless steel chain rated to 33 kg minimum breaking strength.

2.2 COLOR

Provide color, pattern and texture for metal and shade fabric as indicated. Color listed is not intended to limit the selection of equal colors from other manufacturers. Openness factor of shade fabric shall be 10 percent.

PART 3 EXECUTION

3.1 FIELD MEASUREMENTS

After becoming familiar with details of the work, verify all dimensions in the field, and advise the Contracting Officer of any discrepancy before performing the work.

3.2 INSTALLATION

Perform installation in accordance with the approved detail drawings and manufacturer's installation instructions. Install units level, plumb, secure, and at proper height and location relative to window units. Provide and install supplementary or miscellaneous items in total, including clips, brackets, or anchorages incidental to or necessary for a sound, secure, and complete installation. Do not start installation until completion of room painting and finishing operations.

3.3 CLEAN-UP

Upon completion of the installation, clean window treatments and adjust them for form and appearance and proper operating condition. Repair or replace damaged units as directed by the Contracting Officer. Isolate metal parts from direct contact with concrete, mortar, or dissimilar metals. Ensure shades installed in recessed pockets can be removed without disturbing the pocket. The entire shade, when retracted, shall be contained inside the pocket. For shades installed outside the jambs and mullions, overlap each jamb and mullion 20 mm or more when the jamb and mullion sizes permit. Include all hardware, brackets, anchors, fasteners, and accessories necessary for a complete, finished installation.

-- End of Section --

SECTION 12 31 00

MANUFACTURED METAL CASEWORK
11/14

PART 1 GENERAL

1.1 REFERENCES

The publications listed below form a part of this specification to the extent referenced. The publications are referred to within the text by the basic designation only.

AMERICAN WELDING SOCIETY (AWS)

AWS D1.1/D1.1M	(2010; Errata 2011) Structural Welding Code - Steel
AWS D1.3/D1.3M	(2008; Errata 2008) Structural Welding Code - Sheet Steel

ASTM INTERNATIONAL (ASTM)

ASTM A1008/A1008M	(2013) Standard Specification for Steel, Sheet, Cold-Rolled, Carbon, Structural, High-Strength Low-Alloy and High-Strength Low-Alloy with Improved Formability, Solution Hardened, and Bake Hardened
ASTM A167	(2011) Standard Specification for Stainless and Heat-Resisting Chromium-Nickel Steel Plate, Sheet, and Strip
ASTM A325	(2014) Standard Specification for Structural Bolts, Steel, Heat Treated, 120/105 ksi Minimum Tensile Strength
ASTM A325M	(2014) Standard Specification for Structural Bolts, Steel, Heat Treated, 830 MPa Minimum Tensile Strength (Metric)
ASTM F594	(2009; E 2011) Standard Specification for Stainless Steel Nuts
ASTM F836M	(2002; R 2010) Standard Specification for Style 1 Stainless Steel Metric Nuts

BUILDERS HARDWARE MANUFACTURERS ASSOCIATION (BHMA)

ANSI/BHMA A156.9	(2010) Cabinet Hardware

INTERNATIONAL CODE COUNCIL (ICC)

ICC IPC	(2012) International Plumbing Code

KITCHEN CABINET MANUFACTURERS ASSOCIATION (KCMA)

KCMA A161.1	(2000) Performance & Construction Standards for Kitchen and Vanity Cabinets

U.S. GENERAL SERVICES ADMINISTRATION (GSA)

FS FF-B-588	(Rev E; Notice 1) Bolt, Toggle: and Expansion Sleeve, Screw
FS FF-S-325	(Basic; Int Amd 3; Notices 3, 4) Shield, Expansion; Nail, Expansion; and Nail, Drive Screw (Devices, Anchoring, Masonry)
FS TT-E-489	(Rev J; Notice 2) Enamel, Alkyd, Glass, Low VOC Content
FS WW-P-541	(Rev E; Am 1; Notice 1) Plumbing Fixtures

1.2 ADMINISTRATIVE REQUIREMENTS

1.2.1 Pre-Installation Meeting

Within 30 calendar days after date of award, submit for the approval of the Contracting Officer six (6) copies of outline drawings of all casework to be furnished under this contract, together with weights and overall dimensions, and required samples. Ensure drawings show the general arrangement and overall dimensions of the casework, details of any casework supports. Submit manufacturer's standard color charts for metal cabinets showing the manufacturer's recommended color and finish selections.

1.3 SUBMITTALS

Government approval is required for submittals with a "G" designation; submittals not having a "G" designation are for Contractor Quality Control approval. Submittals with an "S" are for inclusion in the Sustainability Notebook, in conformance to Section 01 33 29 SUSTAINABILITY REPORTING. Submit the following in accordance with Section 01 33 00 SUBMITTAL PROCEDURES:

SD-03 Product Data

Cabinets; G

Countertops; G

SD-04 Samples

Manufacturer's Standard Color Charts; G

1.4 DELIVERY, STORAGE, AND HANDLING

Deliver, store, and handle metal casework in a manner that prevents damage or disfigurement.

PART 2 PRODUCTS

2.1 SYSTEM DESCRIPTION

2.1.1 Design Requirements

Provide metal casework, factory-fabricated and finished in the manufacturer's standard sizes and finishes of the type, design, and configuration indicated. Construct casework as specified and meet the requirements of KCMA A161.1. Provide wall and base cabinet assemblies consisting of individual units joined into continuous sections. Accomplish fastenings to permit removal and replacement of individual units without affecting the remainder of the installation. Provide counters with watertight sink rim when indicated. Provide removable doors equipped with position stops to avoid accidental complete withdrawals. Fix or adjust shelves as indicated.

2.2 MATERIALS

Provide corrosion-resistant steel conforming to ASTM A1008/A1008M, and ASTM A167, Type 304 Finish 4.

Provide accessories and hardware conforming to the following requirements, as applicable:

Extension drawer slides: ANSI/BHMA A156.9, Type B85071

Semiconcealed hinges: ANSI/BHMA A156.9, Type B81201, 40 millimeter

Bar type pulls: ANSI/BHMA A156.9, 100 millimeter overall length, Type B12012

Catches: Magnetic, 22 Newton pull

Provide Fasteners conforming to the following:

Screws: Complying with ANSI Standards, Group, Type and Class as applicable

Anchoring Devices: FS FF-S-325, Group, Type, and Class as applicable

Toggle bolts: FS FF-B-588, Type I, Class A, Style 2

Nuts: ASTM F594, corrosion-resistant steel

Bolts: ASTM A325, heavy, hexagon head bolts corrosion-resistant steel

Nuts: ASTM F836M, corrosion-resistant steel

Bolts: ASTM A325M, heavy, hexagon head bolts corrosion-resistant steel

Corrosion-resistant Steel Sinks:

Underside coated with 3 millimeter thick sound deadener

Die-form, seamless, raised edges at front and ends

Cove corners to 13 millimeter radius

Equip with strainers and tail pieces

Provide Service Fixtures conforming to the following requirements:

a. Provide fixtures in accordance with the water conservation policy as stated in the ICC IPC.

b. Faucets:

(1) Deck mounted, cast brass, chrome plated, FS WW-P-541

c. Drains, strainers, and taps: brass, chrome plated, FS WW-P-541

2.3 STEEL CABINET FABRICATION

2.3.1 General

Provide wall and base cabinets fabricated from 0.85 millimeter , cold-rolled furniture steel, except for backs of cabinets and backs of doors provide 0.70 millimeter steel. Construct cabinets with no raw edges or exposed flanges, with welds being flush and ground smooth on all exposed surfaces. Provide concealed fasteners at all exposed exterior surfaces. Provide doors and drawer fronts with panelized double-wall construction, not less than 15 millimeter thick, with a sound-absorbing material adhered between the walls. Equip doors and drawers with rubber or plastic silencers and bumpers. Provide drawers with removable fronts, mounted on metal guides and equipped with position stops for complete drawer withdrawal. Provide adjustable shelving as indicated.

2.3.2 Workmanship

Align end panels, top rails, bottoms and vertical posts at intersections in same plane, without overlap. Grind exposed welds flush and smooth. Welding is to conform to AWS D1.1/D1.1M and AWS D1.3/D1.3M.

Additional casework construction requirements:

a. Welded assembly.

b. Fabricate with enclosed uprights or posts full height or width at front, include sides, backs, bottoms, soffits, ceilings under sloping tops, headers and rail, assembled to form an integral unit.

c. Form sides to make rabbeted stile 19 to 28 mm wide, closed by channel containing shelf adjustment slots.

d. Make bottom of wall units flush, double panel construction.

e. Make top and cross rails of "U" shaped channel.

f. Enclose all backs and bottoms in cabinets, including drawer units.

g. Provide finish panel on exposed cabinet backs.

h. Do not use screws and bolts in construction or assembly of casework, except to secure hardware, applied door stops, accessories, removable panels and where casework is required to fastened end to end or back to back.

i. Fabricate casework, except benches, and desks with finished end panels.

j. Close flush exposed soffits of wall hung shelving, knee spaces in counters, and toe spaces at bases.

k. In base units with sinks provide on piece, lowered backs.

l. In base units with doors provide removable backs.

m. Provide built-in raceways or tubular or channel shaped members of casework for installation of wiring and electric work. Mount junction boxes on rear of cabinets. Electric work is specified in electrical sections of specifications.

n. Provide reinforcing for hardware.

o. Size Dimensions:

(1) Used dimensions shown or specified within tolerances specified.

(2) Tolerance:

(a) Depth: 325 mm in lieu of 300 mm , 450 mm in lieu of 400 mm, except wall hung units above counter 525 mm to 600 mm in lieu of 550 mm.

(b) Width: Minus 25 mm.

(c) Height: 25 mm plus or minus for wall hung cabinets and counter mounted cabinets, excluding sloping tops. 25 mm plus for floor standing cabinets,excluding base and sloping tops. Full height cabinets shown back to back same height.

(d) Manufacturer's tolerance for the length, depth or height: Not to exceed 1.58 mm

2.3.3 Minimum Thickness of Steel

	U. S. Standard Thickness GAUGE	(MILLIMETER)
Drawer fronts, backs, bodies, closure plates or scribe and filler strips less than 75 mm wide,filler strips less than 75 mm wide, sloping top, shelf reinforcement channel and shelves. Toe space or casework soffits and ceilings and ceilings under sloping tops.	20	0.89
Base pedestals, casework top sides, back, and bottom panels, closure scribe and filler strips 75 mm or more. Reinforcement for drawers with locks. Table legs, spreaders and stretchers, when fabricated of cold rolled tubing. Metal for desks; except legs and aprons. Door exterior and interior panels, flush or glazed. Cross rails of base units. Front bottom rails, back bottom rails; rails may be 1.49 mm 16 gauge thick. Uprights or posts. Top corner gussets.	18	1.20
Aprons, apron division, reinforcing gussets, table legs, desk legs and aprons, spreaders and stretchers when formed without welding. Toe base gussets, drawer slides, and other metal work. Front top rails and back rails except top back rails may be 1.2 mm 18 gauge thick.reinforcing gussets, table legs, desk legs and aprons, spreaders and stretchers when formed without welding. Toe base gussets, drawer slides, and other metal work. Front top rails and back rails except top back rails may be 1.2 mm 18 gauge thick.	16	1.49
Drawer runners door tracks	14	1.88

	U. S. Standard Thickness GAUGE	(MILLIMETER)
Base unit bottom corner gussets and leg sockets	12	2.64
Reinforcement for hinge reinforcement inside doors and cabinets	11	3

2.3.4 Cabinets

Provide cabinets with sheet steel fronts, backs, sides, tops, and bottoms.

Form sides with rabbeted stiles 28 millimeter wide, closed by welded channel containing embossed louvers spaced 40 millimeteron center, for adjustable shelves.

Provide cabinets that have a steel channel-shaped top rail, 1.3 millimeter steel cross rails, and Z-shaped rear rail to engage 1.6 millimeter steel hanging bracket.

At base cabinets, provide 40 millimeter long leveling screws for adjusting to floor variations that are accessible through plugged openings in bottom; install 1.9 millimeter gussets to support the screws.

At base cabinets, provide removable backs, knee space panels, or access doors where piping occurs.

2.3.5 Doors

Provide doors that are double-pan construction with 16 millimeter thick telescoped inner pan into outer pan with exposed vertical edge formed into channel shape having returned lip over inner pan and offset to receive lip.

Coat panels with 3 millimeter thick asphaltic sound deadener.

Fasten reinforcement for hardware attachment to inner pan and conceal.

Fit hinged doors with pairs of hinges, knob pulls, locks, and bumpers.

Bevel inside edge of cutout in front panel of glass door.

Set glass in continuous rubber gasket between panels.

Additional considerations for doors:

a. Hollow metal type, flush and glazed doors not less than 16 mm thick.

b. Fabricate flush metal doors of two panels formed into pans with corners welded and ground smooth. Provide flush doors with a sound deadening core.

c. Provide sheet steel hinge reinforcement inside doors.

d. Doors removable without use of tools except where equipped with locks.

2.3.6 Drawers

Provide drawer fronts that are double-pan construction with 16 millimeter thick telescoped inner pan into outer pan with exposed vertical edge formed into channel shape having return lip over inner pan and offset to receive lip. Weld drawer bodies to front through flanges on sides and bottom, and to back through flanges at rear.

Extend flanges outward or downward, top of side, and backrolled.

Cove corners to 15 millimeter radius.

Provide drawer accessories including slides, bar pulls, lock and stop devices.

Additional considerations for drawers:

a. Drawer fronts flush hollow metal type not less than 16 mm thick with sound deadening core. Fabricate of two panels formed into pans. Weld and grind smooth corners of drawer fronts.

b. Form bodies from one piece of steel, weld to drawer front.

c. Provide rubber bumpers at both sides of drawer head to cushion closing.

d. Equip with roller suspension guides.

2.3.7 Shelves

Fabricate shelves from sheet steel with front and rear edges flanged down 20 millimeter and hemmed back at 30 degrees to underside of shelf.

Support shelves with 1.6 millimeter shelf clips inserted in slots in front stile and in form channel in back.

Additional considerations for shelves:

a. Capable of supporting an evenly distributed minimum load of 122 kg/m2 without visible distortion.

b. Flange shelves down 19 mm on edges, with front and bearing edges flanged back 13 mm.

c. For shelves over 1050 mm in length and over 300 mm in depth install 38 mm by 13 mm by 0.9 mm thick sheet steel hat channel reinforcement welded to underside midway between front and back and extending full length of shelf.

d. Provide means of positive locking shelf in position, and to permit adjustment without use of tools.

2.3.8 Finish

Prime and factory finish steel cabinets with two coats of synthetic enamel, baking quality, conforming to FS TT-E-489, Class B. Provide colors as selected.

2.3.9 Welded Cabinets

Conform to KCMA A161.1, all welded construction.

2.3.10 Closures and Filler Strips at Pipe Spaces

Requirements for closures and filler strips at pipe spaces:

a. Flat steel strips or plates.

b. Openings less than 200 mm wide: 1.2 mm thick.

c. Openings more than 200 mm wide 0.9 mm wide.

2.4 ACCESSORIES AND HARDWARE

Furnish accessories such as utility shelves and racks for extracts, condiments, and towels; bins for sugar and flour; breadboxes; and trays for cutlery and flatware as indicated.

Provide corrosion resistant hardware. Provide exposed hardware with a chromium-plated finish or a corrosion-resistant finish as approved. Paint semi-concealed hinges on cabinets where paint finish is required to match the cabinets. Equip doors with magnetic-type catches. Provide door and drawer pulls as indicated.

2.5 CABINETS

The work includes providing new factory-finished labratory wall and base cabinets with:

a. Stainless steel countertops

2.5.1 Cabinet Hardware

Comply with ANSI/BHMA A156.9.

Requirements for cabinet hardware:

a. Door/Drawer Pulls: B02011.

(1) One for drawers up to 575 mm wide.

(2) Two for drawers over 575 mm wide.

(3) Sliding door flush pull, each door: B02201.

b. Door in seismic zones: B03352.

(1) Do not provide thumb latch on doors equipped with three point locking device.

(2) Use lever operated two point latching device on paired doors over 900 mm high if three point locking or latching device is not used.

c. Cabinet Door Catch:

(1) Install at bottom of wall cabinets, top of base cabinets and top and bottom of full height cabinet doors over 1200 mm.

(2) Omit on doors with locks.

d. Drawer Slides:

(1) Use B05051 for drawers over 150 mm deep.

(2) Use B05052 for drawers 75 to 150 mm deep.

(3) Use B05053 for drawers less than 75 mm deep.

2.6 COUNTERTOPS

2.6.1 General

Provide stainless steel lab countertops, 25 mm thick, with integral 150 mm high backsplash and rounded edges and corners.

2.6.1.1 Physical Properties

a. Thickness: 1.5 mm

b. Type: 304 stainless steel

c. Finish: Satin finish

d. Construction: all seams and corners welded, ground smooht and eased.

2.7 FINISH

2.7.1 Cabinet Finish

Provide cabinets with a factory-applied durable finish in accordance with KCMA A161.1 requirements and of a type standard with the manufacturer.

2.8 COLOR, TEXTURE, AND PATTERN

Provide color as indicated on the drawings. Color listed is not intended to limit the selection of equal colors from other manufacturers.

PART 3 EXECUTION

3.1 INSTALLATION

Install casework as described in manufacturers installation drawings in accordance with design intent.

a. Level base cabinets by adjusting leveling screws.

b. Secure cases permanently to floor and wall construction, where

applicable.

c. Secure wall cases in position with screws to blocking, where applicable.

d. Bolt adjoining cases together.

e. Align doors, adjust hardware, and clean surfaces.

3.1.1 Coordination

Before installing casework, verify wall and floor surfaces covered by casework have been finished.

Verify location and size of mechanical and electrical services as required.

Verify reinforcement of walls and partitions for support and anchorage of casework.

3.1.2 Fastenings and Anchorage

Do not anchor to wood ground strips.

Provide hat shape metal spacers where fasteners span gaps or spaces 05-03M 12301-16.

Use 6 mm diameter toggle or expansion bolts, or other appropriate size and type fastening device for securing casework to walls or floor. Use expansion bolts shields having holding power beyond tensile and shear strength of bolt and breaking strength of bolt head.

Use 6 mm diameter hex bolts for securing cabinets together.

Use 6 mm by minimum 38 mm length lag bolt anchorage to wood blocking for concealed fasteners.

Use not less than No. 12 or 14 wood screws with not less than 38 mm penetration into wood blocking.

Space fastening devices 300 mm on center with minimum of three fasteners in 900 or 1200 mm unit width.

Anchor floor mounted cabinets with a minimum of four bolts through corner gussets. Anchor bolts may be combined with or separate from leveling device.

Secure cabinets in alignment with hex bolts or other internal fastener devices removable from interior of cabinets without special tools. Do not use fastener devices which require removal of tops for access.

Where units abut end to end anchor together at top and bottom of sides at front and back. Where units are back to back anchor backs together at corners with hex bolts placed inconspicuously inside casework.

Where type, size, or spacing of fastenings is not shown or specified, show on shop drawings proposed fastenings and method of installation.

3.1.3 Closures and Filler Plates

Close openings larger than 6 mm wide between cabinets and adjacent walls with flat, steel closure strips, scribed to required contours, or machined formed steel fillers with returns, and secured with sheet metal screws to tubular or channel members of units, or bolts where exposed on inside.

Where ceilings interfere with installation of sloping tops, omit sloping tops and provide flat steel filler plates.

a. Secure filler plates to casework top members, unless shown otherwise.

b. Secure filler plates more than 150 mm in width top edge to a continuous 25 by 25 mm 0.889 mm thick steel formed steel angle with screws.

c. Anchor angle to ceiling with toggle bolts, 05-03M 12301-17

Install closure strips at exposed ends of pipe space and offset opening into concealed space. Paint closure strips and fillers with same finishes as cabinets. Caulk and seal laboratory furniture as specified in Section 07 92 00 JOINT SEALANTS

3.1.4 Cabinets

Install in available space; arranged for safe and convenient operation and maintenance. Align cabinets for flush joints except where shown otherwise.

Install cabinets level with bottom of wall cabinets in alignment and tops of base cabinets aligned. Install corner cabinets with hinges on corner side with filler or spacers sufficient to allow opening of drawers.

Plug Buttons:

a. Install plug buttons in predrilled or prepunched perforations not used.

b. Use chromium plate plug buttons or buttons finish to match adjacent surfaces.

Cabinets 6D: Ground to nearest cold water pipe in accordance with NFPA, Underwriters Laboratories, Inc., or other nationally recognized laboratory approved ground specified system.

Cabinets PH77:

a. Install undercounter unit, PH77U, on base to bring cabinet to same height as adjacent cabinets.

b. Install wall hung units, PH77N, as for wall cabinets, bolt together with security type bolts.

c. Install stacked units, PH77D, bolted together and to base with security type bolts.

3.2 CLEANING

Remove crating and packing materials from premises. Wipe down surfaces to remove fingerprints and markings and leave in clean condition.

3.3 FIELD QUALITY CONTROL

3.3.1 Inspection

Examine casework grounds and supports for adequate anchorage, foreign material, moisture, and unevenness that could prevent quality casework installation. Ensure that electrical and plumbing rough-ins for casework are complete. Do not proceed with installation until defects are corrected.

-- End of Section --

THIS PAGE HAS BEEN INTENTIONALLY LEFT BLANK

SECTION 12 48 13

ENTRANCE FLOOR MATS AND FRAMES
02/14

PART 1 GENERAL

1.1 REFERENCES

The publications listed below form a part of this specification to the extent referenced. The publications are referred to within the text by the basic designation only.

ASTM INTERNATIONAL (ASTM)

ASTM B221M	(2013) Standard Specification for Aluminum and Aluminum-Alloy Extruded Bars, Rods, Wire, Profiles, and Tubes (Metric)
ASTM D2047	(2011) Static Coefficient of Friction of Polish-Coated Floor Surfaces as Measured by the James Machine
ASTM E648	(2014c) Standard Test Method for Critical Radiant Flux of Floor-Covering Systems Using a Radiant Heat Energy Source

U.S. GREEN BUILDING COUNCIL (USGBC)

LEED NC	(2009) Leadership in Energy and Environmental Design(tm) New Construction Rating System

U.S. NATIONAL ARCHIVES AND RECORDS ADMINISTRATION (NARA)

36 CFR 1191	Americans with Disabilities Act (ADA) Accessibility Guidelines for Buildings and Facilities; Architectural Barriers Act (ABA) Accessibility Guidelines

1.2 SUSTAINABILITY REPORTING

Materials in this technical specification may contribute towards contract compliance with sustainability requirements.

1.2.1 LEED Requirements

See Section 01 33 29 SUBSTAINABILITY REQUIREMENTS LEED (TM) Documentation for project LEED NC recycled content, low emitting materials,\ and\ requirements.

1.2.2 EPA Comprehensive Procurement Guidelines

See Section 01 33 29 SUSTAINABILITY REPORTING for requirements associated with EPA designated products.

1.3 SUBMITTALS

Government approval is required for submittals with a "G" designation;

submittals not having a "G" designation are for Contractor Quality Control approval. Submittals with an "S" are for inclusion in the Sustainability Notebook, in conformance to Section 01 33 29 SUSTAINABILITY REPORTING. Submit the following in accordance with Section 01 33 00 SUBMITTAL PROCEDURES:

SD-02 Shop Drawings

Installation Drawings; G

Detail Drawings; G

SD-03 Product Data

Entrance Floor Mats and Frames; G
Adhesives and Concrete Primers; G

SD-08 Manufacturer's Instructions

Manufacturer's Instructions; G

SD-10 Operation and Maintenance Data

Protection, Maintenance, and Repair Information; G

SD-11 Closeout Submittals

LEED (TM) Documentation; G

1.4 QUALITY ASSURANCE

Comply with 36 CFR 1191 Americans with Disabilities Act (ADA) Accessibility Guidelines for Buildings and Facilities; Architectural Barriers Act (ABA) Accessibility Guidelines for installed entrance floor mats and frames. Ensure entrance floor mats and frames are slip resistant in accordance with ASTM D2047, Coefficient of Friction, minimum 0.60 for accessible routes and be structurally capable of withstanding a Uniform floor load of 14 kPa. Ensure flammability is in accordance with ASTM E648, Class 1, Critical Radiant Flux, minimum 0.45 watts/m2.

1.5 DELIVERY OF MATERIALS

Deliver materials to the project site in their original packages or containers bearing labels clearly identifying the manufacturer, brand name, and quality or grade.

Store materials in their original unbroken packages or containers in the area in which they will be installed. Unwrap, inspect, and place mats at indicated location. Remove all excess packing materials.

PART 2 PRODUCTS

2.1 Entrance Floor Mats and Frames

2.1.1 Roll-Up Mats

Roll-up mats with mill finish aluminum tread rails spaced a maximum 51 mm on center and running counter to the traffic flow. Mats must allow debris

to fall to sub-floor. Tread rails are connected by aluminum hinges and complete with an aluminum edge around the perimeter and a continuous vinyl cushion, and carpet inserts.

2.1.2 Frames

Recessed frames in extruded aluminum Alloy 6061-T6 ASTM B221M or Alloy 6063-T5 ASTM B221M. Ensure frame depth accommodates mat and/or system specified. Color is mill finish. Edge-frame members are fabricated in single lengths or minimum pieces possible, with hairline joints equally spaced and pieces spliced together by straight connecting pins. Ensure concealed surfaces of aluminum frames that contact cementous material are coated with manufacturer's standard protective coating. Frames include accessories and devices necessary for a complete installation.

2.2 ADHESIVES AND CONCRETE PRIMERS

Provide adhesives and concrete primers, where required, according to manufacturer's recommendations.

2.3 COLOR AND SIZE

Size and color of mat is as indicated on the drawings.

PART 3 EXECUTION

3.1 EXAMINATION

Comply with manufacturer's requirements of substrates and floor conditions affecting installation of floor mats and frames. Installation cannot occur until unsatisfactory conditions have been corrected.

3.2 INSTALLATION

Install floor mats and frames according to manufacturer's instructions. Set mat tops at height recommended by manufacturer for most effective cleaning action. Coordinate top of mat surfaces with bottom of doors that swing across mats to provide clearance between door and mat. Coordinate recess frame installation with concrete construction to ensure frame anchorage is correct and that the base is level and flat. Install grout and fill around frames and, if required to set mat tops at proper elevations, in recesses under mats. Finish grout and fill smooth and level.

Submit detail drawings, and custom graphics drawings as required. Provide installation drawings. Provide manufacturer's protection, maintenance, and repair information.

-- End of Section --

THIS PAGE HAS BEEN INTENTIONALLY LEFT BLANK

SECTION 13 34 19

METAL BUILDING SYSTEMS
11/11

PART 1 GENERAL

1.1 REFERENCES

The publications listed below form a part of this specification to the extent referenced. The publications are referred to within the text by the basic designation only.

AMERICAN INSTITUTE OF STEEL CONSTRUCTION (AISC)

AISC 325	(2011) Steel Construction Manual
AISC 341	(2010) Seismic Provisions for Structural Steel Buildings
AISC 360	(2010) Specification for Structural Steel Buildings

AMERICAN IRON AND STEEL INSTITUTE (AISI)

AISC/AISI 121	(2004) Standard Definitions for Use in the Design of Steel Structures
AISI SG03-3	(2002; Suppl 2001-2004; R 2008) Cold-Formed Steel Design Manual Set

AMERICAN SOCIETY OF CIVIL ENGINEERS (ASCE)

ASCE 7	(2010; Errata 2011; Supp 1 2013) Minimum Design Loads for Buildings and Other Structures

AMERICAN WELDING SOCIETY (AWS)

AWS A5.1/A5.1M	(2012) Specification for Carbon Steel Electrodes for Shielded Metal Arc Welding
AWS D1.1/D1.1M	(2010; Errata 2011) Structural Welding Code - Steel
AWS D1.3/D1.3M	(2008; Errata 2008) Structural Welding Code - Sheet Steel

ASTM INTERNATIONAL (ASTM)

ASTM A153/A153M	(2009) Standard Specification for Zinc Coating (Hot-Dip) on Iron and Steel Hardware
ASTM A307	(2014) Standard Specification for Carbon Steel Bolts and Studs, 60 000 PSI Tensile Strength

ASTM A325M	(2014) Standard Specification for Structural Bolts, Steel, Heat Treated, 830 MPa Minimum Tensile Strength (Metric)
ASTM A36/A36M	(2014) Standard Specification for Carbon Structural Steel
ASTM A529/A529M	(2014) Standard Specification for High-Strength Carbon-Manganese Steel of Structural Quality
ASTM A53/A53M	(2012) Standard Specification for Pipe, Steel, Black and Hot-Dipped, Zinc-Coated, Welded and Seamless
ASTM A563M	(2007; R 2013) Standard Specification for Carbon and Alloy Steel Nuts (Metric)
ASTM A572/A572M	(2013a) Standard Specification for High-Strength Low-Alloy Columbium-Vanadium Structural Steel
ASTM A992/A992M	(2011) Standard Specification for Structural Steel Shapes
ASTM B695	(2004; R 2009) Standard Specification for Coatings of Zinc Mechanically Deposited on Iron and Steel
ASTM DEFONLINE	(2008) ASTM Online Dictionary of Engineering Science and Technology
ASTM E1592	(2005; R 2012) Structural Performance of Sheet Metal Roof and Siding Systems by Uniform Static Air Pressure Difference
ASTM F1554	(2007a; E 2011) Standard Specification for Anchor Bolts, Steel, 36, 55, and 105-ksi Yield Strength
ASTM F1852	(2014) Standard Specification for "Twist Off" Type Tension Control Structural Bolt/Nut/Washer Assemblies, Steel, Heat Treated, 120/105 ksi Minimum Tensile Strength
ASTM F436	(2011) Hardened Steel Washers
ASTM F436M	(2011) Hardened Steel Washers (Metric)
ASTM F844	(2007a; R 2013) Washers, Steel, Plain (Flat), Unhardened for General Use

METAL BUILDING MANUFACTURERS ASSOCIATION (MBMA)

MBMA MBSM	(2002) Metal Building Systems Manual

1.2 GENERAL REQUIREMENTS

1.2.1 Structural Performance

Provide metal building systems capable of withstanding the effects of gravity loads and the following loads and stresses within the limits and conditions indicated.

1.2.1.1 Engineering

Design metal building systems conforming to procedures described in MBMA MBSM.

1.2.1.2 Design Loads

Conform to the requirements of MBMA MBSM, ASCE 7, and the building code applicable to the project geographical location.

1.2.1.3 Live Loads

Include all vertical loads induced by the building occupancy indicated on the drawings, as well as loads induced by maintenance workers, materials and equipment for roof live loads.

1.2.1.4 Wind Loads

Include horizontal loads induced by a basic wind speed Project site as indicated.

1.2.1.5 Collateral Loads

Include additional dead loads other than the weight of metal building system for permanent items such as sprinklers, mechanical systems, electrical systems, and ceilings.

1.2.1.6 Auxiliary Loads

Include dynamic live loads, such as those generated by materials-handling equipment indicated on detail drawings.

1.2.1.7 Load Combinations

Design metal building systems to withstand the most critical effects of load factors and load combinations as required by MBMA MBSM, ASCE 7, and the building code applicable to the project location.

1.2.1.8 Deflection Limits

Engineer assemblies to withstand design loads with deflections no greater than the following:

a. Purlins and Rafters; vertical deflection of 1/240 of the span.

b. Girts; horizontal deflection of 1/240 of the span.

Design secondary framing system to accommodate deflection of primary building structure and construction tolerances, and to maintain clearances at openings. Provide metal panel assemblies capable of withstanding the

effects of loads and stresses indicated, based on testing according to ASTM E1592.

1.2.2 Seismic Performance

Design and engineer metal building system capable of withstanding the effects of earthquake motions determined according to ASCE 7, AISC 341, and the applicable portions of the building code in the geographic area where the construction will take place.

1.3 DEFINITIONS

ASTM DEFONLINE applies to this definition paragraph.

a. Bay: Dimension between main frames measured normal to frame (at centerline of frame) for interior bays, and dimension from centerline of first interior main frame measured normal to end wall (outside face of end-wall girt) for end bays.

b. Building Length: Dimension of the building measured perpendicular to main framing from end wall to end wall (outside face of girt to outside face of girt).

c. Building Width: Dimension of the building measured parallel to main framing from sidewall to sidewall (outside face of girt to outside face of girt).

d. Clear Span: Distance between supports of beams, girders, or trusses (measured from lowest level of connecting area of a column and a rafter frame or knee).

e. Eave Height: Vertical dimension from finished floor to eave (the line along the sidewall formed by intersection of the planes of the roof and wall).

f. Clear Height under Structure: Vertical dimension from finished floor to lowest point of any part of primary or secondary structure, not including crane supports, located within clear span.

g. Terminology Standard: Refer to MBMA "Metal Building Systems Manual" for definitions of terms for metal building system construction not otherwise defined in this Section or in referenced standards.

1.4 SYSTEM DESCRIPTION

General: Provide a complete, integrated set of mutually dependent components and assemblies that form a metal building system capable of withstanding structural and other loads, thermally induced movement, and exposure to weather without failure or infiltration of water into building interior. Include primary and secondary framing, and accessories complying with requirements indicated.

Provide metal building system of size and with spacing, slopes, and spans indicated.

1.4.1 Primary Frame Type

a. Rigid Clear Span: Solid-member, structural-framing system without interior columns.

1.5 SUBMITTALS

Government approval is required for submittals with a "G" designation; submittals not having a "G" designation are for Contractor Quality Control approval. Submittals with an "S" are for inclusion in the Sustainability Notebook, in conformance to Section 01 33 29 SUSTAINABILITY REPORTING. Submit the following in accordance with Section 01 33 00 SUBMITTAL PROCEDURES:

SD-01 Preconstruction Submittals

Manufacturer's Qualifications; G

SD-02 Shop Drawings

Detail Drawings; G

SD-05 Design Data

Manufacturer's descriptive and technical literature; G

Manufacturer's building design analysis; G

SD-07 Certificates

Qualification of Manufacturer; G

Qualification of Erector; G

SD-08 Manufacturer's Instructions

shipping, handling, and storage; G

SD-11 Closeout Submittals

Manufacturer's Warranty; G

Contractor's Warranty for Installation; G

1.6 QUALITY ASSURANCE

1.6.1 Pre-Erection Conference

After submittals are received and approved but before metal building system work, including associated work, is performed, the Contracting Officer will hold a pre-erection conference to review the following:

a. The detail drawings, specifications, and manufacturer's descriptive and technical literature.

b. Finalize construction schedule and verify availability of materials, erector's personnel, equipment, and facilities needed to make progress and avoid delays.

c. Methods and procedures related to metal building system erection, including, but not limited to: qualification of manufacturer,

qualification of erector, building design analysis, written instructions and test reports.

d. Support conditions for compliance with requirements, including alignment between and erection of structural members.

1.6.2 Manufacturer's Technical Representative

The representative must have authorization from manufacturer to approve field changes and be thoroughly familiar with the products, and erection of structural framing.

1.6.3 Manufacturer's Qualifications

Metal building system manufacturer must have a minimum of five (5) years experience as a qualified manufacturer and a member of MBMA of metal building systems and accessory products.

Provide engineering services by an authorized currently licensed engineer in the geographical area where construction will take place, having a minimum of four years experience as an engineer knowledgeable in building design analysis, protocols and procedures for the "Metal Building Systems Manual" (MBMA MBSM); ASCE 7, and ASTM E1592.

Provide certified engineering calculations using the products submitted for:

a. Roof Dead and Live Loads

b. Collateral Loads

c. Foundation Loads

d. Roof Snow Load

e. Seismic Loads

1.6.4 Qualification of Erection Contractor

An experienced erector who has specialized in erecting and installing work similar in material, design, and extent to that indicated for this Project and must be approved and certified by the metal building system manufacturer.

1.6.5 Single Source

Obtain primary and secondary components and structural framing members, each type of metal roof, wall and liner panel assemblies, clips, closures and other accessories from the standard products of the single source from a single manufacturer to operate as a complete system for the intended use.

1.6.6 Welding

Qualify procedures and personnel according to AWS A5.1/A5.1M, AWS D1.1/D1.1M, and AWS D1.3/D1.3M.

1.6.7 Structural Steel

Comply with AISC 325, AISC 360, for design requirements and allowable stresses.

1.6.8 Cold-Formed Steel

Comply with AISC/AISI 121 and AISI SG03-3 for design requirements and allowable stresses.

1.7 SHIPPING, HANDLING AND STORAGE

1.7.1 Delivery

Package and deliver components so as not to be damaged or deformed and protected during transportation and handling.

1.8 PROJECT CONDITIONS

1.8.1 Weather Limitations

Proceed with installation preparation only when existing and forecasted weather conditions permit Work to proceed without water entering into existing panel system or building.

1.8.2 Field Measurements

1.8.2.1 Established Dimensions for Foundations

Comply with established dimensions on approved anchor-bolt plans, established foundation dimensions, and proceed with fabricating structural framing. Do not proceed without verifying field measurements. Coordinate anchor-bolt installation to ensure that actual anchorage dimensions correspond to established dimensions.

1.8.2.2 Verification Record

Verify locations of all framing and opening dimensions by field measurements before metal panel fabrication and indicate measurements on Shop Drawings.

1.9 COORDINATION

Coordinate size and location of concrete foundations and casting of anchor-bolt inserts into foundation walls and footings. Concrete, reinforcement, and formwork requirements are specified in section on CAST-IN-PLACE CONCRETE.

Coordinate installation of plumbing system equipment supports piping and supports and accessories, which are specified in Division 22 - PLUMBING.

Coordinate installation of HVAC system ductwork and supports piping and supports and accessories.

1.10 WARRANTY

1.10.1 Building System Warranty

Furnish manufacturer's no-dollar-limit warranty for the metal building system. The warranty period is to be no less than 20 years from the date of acceptance of the work and be issued directly to the Government. The warranty must provide that if within the warranty period, the metal building system shows evidence of deterioration resulting from defective materials and/or workmanship, correcting of any defects is the responsibility of the metal building system manufacturer. Repairs that become necessary because of defective materials and workmanship while metal building system is under warranty are to be performed within 120 hours after notification, unless additional time is approved by the Contracting Officer. Failure to perform repairs within 120 hours of notification will constitute grounds for having emergency repairs performed by others and will not void the warranty.

PART 2 PRODUCTS

2.1 STRUCTURAL FRAMING MATERIALS

2.1.1 W-Shapes

ASTM A992/A992M; ASTM A572/A572M or ASTM A529/A529M.

2.1.2 Channel, Angles, M-Shapes and S-Shapes

ASTM A36/A36M; ASTM A572/A572M or ASTM A529/A529M.

2.1.3 Plate and Bar

ASTM A36/A36M, ASTM A572/A572M or ASTM A529/A529M.

2.1.4 Steel Pipe

ASTM A36/A36M, ASTM A53/A53M, ASTM A572/A572M or ASTM A529/A529M.

2.1.5 High-Strength Bolts, Nuts, and Washers

ASTM A325M, heavy hex steel structural bolts; ASTM A563M heavy hex carbon-steel nuts; and ASTM F436M hardened carbon-steel washers.

Finish: Hot-dip zinc coating, ASTM A153/A153M.

Tension-Control, High-Strength Bolt-Nut-Washer Assemblies: ASTM F1852, heavy-hex-head steel structural bolts with spline.

Finish: Mechanically deposited zinc coating, ASTM B695.

2.1.6 Non-High-Strength Bolts, Nuts, and Washers

ASTM A307, ASTM A563M, and ASTM F844.

Finish: ASTM A153/A153M.

2.1.7 Anchor Rods

ASTM F1554.

a. Configuration: Straight.
b. Nuts: ASTM A563M heavy hex carbon steel.
c. Plate Washers: ASTM A36/A36M carbon steel.
d. Washers: ASTM F436 hardened carbon steel.
e. Finish: Hot-dip zinc coating, ASTM A153/A153M.

2.2 STRUCTURAL FRAMING

2.2.1 Primary Framing

Manufacturer's standard structural primary framing system includes transverse frames; rafter, rakes, and canopy beams; and corner columns; and wind bracing designed to withstand required loads and specified requirements. Provide frames with attachment plates, bearing plates, and splice members. Provide frame span and spacing indicated.

Shop fabricate framing components by welding or by using high-strength bolts to the indicated size and section with base-plates, bearing plates, stiffeners, and other items required. Cut, form, punch, drill, and weld framing for bolted field erection.

a. Rigid Clear-Span Frames: I-shaped frame sections fabricated from shop-welded, built-up steel plates or structural-steel shapes. Interior columns are not permitted.

b. Exterior Column Type: Tapered.

c. Rafter Type: Uniform depth.

2.2.2 Secondary Framing

Manufacturer's standard secondary framing members, including purlins, girts, eave struts, flange bracing, base members, gable angles, clips, headers, jambs, and other miscellaneous structural members. Fabricate framing from cold-formed, structural-steel sheet or roll-formed, metallic-coated steel sheet pre-painted with coil coating, unless otherwise indicated.

Shop fabricate framing components by roll-forming or break-forming to the indicated size and section with base-plates, bearing plates, stiffeners, and other plates required for erection. Cut, form, punch, drill, and weld secondary framing for bolted field connections to primary framing.

a. Purlins: C or Z-shaped sections; fabricated from steel sheet, built-up steel plates, or structural-steel shapes; minimum depth As required to comply with system performance requirements.

b. Eave Struts: Unequal-flange, C-shaped sections; fabricated from steel sheet, built-up steel plates, or structural-steel shapes; to provide adequate backup for metal panels.

c. Flange Bracing: Structural-steel angles or cold-formed structural tubing to stiffen primary frame flanges.

d. Purlin Clips: Steel sheet. Provide galvanized clips where clips are connected to galvanized framing members.

e. Secondary End-Wall Framing: Manufacturer's standard sections fabricated from zinc-coated (galvanized) steel sheet .

f. Framing for Openings: Channel shapes; fabricated cold-formed, structural-steel sheet or structural-steel shapes. Frame head and jamb of door openings, and head, jamb, and sill of other openings.

g. Miscellaneous Structural Members: Manufacturer's standard sections fabricated from cold-formed, structural-steel sheet; built-up steel plates; or zinc-coated (galvanized) steel sheet; designed to withstand required loads.

2.2.3 Bracing

Provide adjustable wind bracing as follows:

a. Rods: ASTM A36/A36M; ASTM A572/A572M; or ASTM A529/A529M threaded a minimum of 300 mm at each end.

PART 3 EXECUTION

3.1 EXAMINATION

Before erection proceeds examine with the erector present the concrete foundation dimensions, concrete bearing surfaces, anchor bolt size and placement, survey slab elevation, locations of bearing plates, and other embedment's to receive structural framing with the metal building manufacturer's templates and drawings before erecting any steel components for compliance with requirements for installation tolerances and other conditions affecting performance of the Work.

Examine primary and secondary framing to verify that rafters, purlins, angles, channels, and other structural and metal panel support members and anchorages have been installed within alignment tolerances required by metal building manufacturer, UL, ASTM, ASCE 7 and as required by the building code for the geographical area where construction will take place.

Submit to the Contracting Officer a written report, endorsed by Erector, listing conditions detrimental to performance of the Work.

Proceed with erection only after unsatisfactory conditions have been corrected.

3.2 PREPARATION

Provide temporary shoring, guys, braces, and other supports during erection to keep the structural framing secure, plumb, and in alignment against temporary construction loading or loads equal in intensity of the building design loads. Remove temporary support systems when permanent structural framing, connections, and bracing are in place, unless otherwise indicated.

Clean substrates of substances harmful to insulation, including removing projections capable of interfering with insulation attachment and

performance.

3.3 ERECTION OF STRUCTURAL FRAMING

Erect metal building system according to manufacturer's written erection instructions, approved shop drawings and other erection documents in accordance with MBMA MBSM - "Metal Building Systems Manual".

Do not field cut, drill, or alter structural members without written approval from metal building system manufacturer's professional engineer and the Contracting Officer.

Set structural framing accurately in locations and to elevations indicated and according to AISC 325 specifications. Maintain structural stability of frame during erection.

Clean and roughen concrete bearing surfaces prior to setting plates. Clean bottom surface of plates.

Align and adjust structural framing before permanent bolt-up and connections. Perform necessary adjustments and alignment to compensate for changes or discrepancies in elevations.

Maintain erection tolerances of structural framing in accordance with AISC 360.

3.4 ACCESSORY INSTALLATION

3.4.1 General

Install accessories with positive anchorage to building and weather-tight mounting, and provide for thermal expansion. Coordinate installation with flashings and other components.

3.4.2 Dissimilar Metals

Where dissimilar metals contact one another or corrosive substrates are present, protect against galvanic action by painting dissimilar metal surfaces with bituminous coating, by applying rubberized-asphalt underlayment to each surface, or by other permanent separation techniques as recommended by the metal building manufacturer.

3.5 CLEAN-UP AND PROTECTION

3.5.1 Structural Framing

Clean all exposed structural framing at completion of installation. Remove metal shavings, filings, bolts, and wires from work area. Remove grease and oil films, excess sealants, handling marks, contamination from steel wool, fittings and drilling debris and scrub the work clean. Exposed metal surfaces to be free of dents, creases, waves, scratch marks, solder or weld marks, and damage to the finish coating.

3.6 WASTE MANAGEMENT

Separate waste in accordance with the Waste Management Plan, placing copper materials, ferrous materials, and galvanized sheet metal in designated areas for reuse. Close and seal tightly all partly used

adhesives and solvents; store protected in a well-ventilated, fire-safe area at moderate temperature.

Collect and place scrap/waste debris in containers. Promptly dispose of scrap/waste debris. Do not allow scrap/waste debris to accumulate on-site; transport scrap/waste debris from government property and legally dispose of them.

3.7 WARRANTY

3.7.1 MANUFACTURER'S WARRANTY

Submit all manufacturers' signed warranties to Contracting Officer prior to final commissioning and acceptance.

3.7.2 CONTRACTOR'S WARRANTY for INSTALLATION

Submit contractor's warranty for installation to the Contracting Officer prior to final commissioning and acceptance.

3.7.3 CONTRACTOR'S FIVE (5) YEAR NO PENAL SUM WARRANTY

CONTRACTOR'S FIVE (5) YEAR NO PENAL SUM WARRANTY
FOR
METAL BUILDING SYSTEM

FACILITY DESCRIPTION:_____

BUILDING NUMBER:_____

CORPS OF ENGINEERS CONTRACT NUMBER:_____

CONTRACTOR

CONTRACTOR:_____
ADDRESS:_____

POINT OF CONTACT:_____

TELEPHONE NUMBER:_____

OWNER

OWNER:_____
ADDRESS:_____

POINT OF CONTACT:_____

TELEPHONE NUMBER:_____

CONSTRUCTION AGENT

CONSTRUCTION AGENT:_____
ADDRESS:_____

POINT OF CONTACT:_____
_
TELEPHONE NUMBER:_____

CONTRACTOR'S FIVE (5) YEAR NO PENAL SUM WARRANTY
FOR
METAL BUILDING SYSTEM
(continued)

THE METAL BUILDING SYSTEM INSTALLED ON THE ABOVE NAMED BUILDING IS WARRANTED BY (_____) FOR A PERIOD OF FIVE 20 YEARS AGAINST WORKMANSHIP AND MATERIAL DEFICIENCIES, WIND DAMAGE AND STRUCTURAL FAILURE WITHIN PROJECT SPECIFIED DESIGN LOADS, AND LEAKAGE. THE METAL BUILDING SYSTEM COVERED UNDER THIS WARRANTY INCLUDES, BUT IS NOT LIMITED TO, THE FOLLOWING:

FRAMING AND STRUCTURAL MEMBERS, ROOFING AND SIDING PANELS AND SEAMS, INTERIOR OR EXTERIOR GUTTERS AND DOWNSPOUTS, ACCESSORIES, TRIM, FLASHINGS AND MISCELLANEOUS BUILDING CLOSURE ITEMS SUCH AS DOORS AND WINDOWS (WHEN FURNISHED BY THE MANUFACTURER), CONNECTORS, COMPONENTS, AND FASTENERS, AND OTHER SYSTEM COMPONENTS AND ASSEMBLIES INSTALLED TO PROVIDE A WEATHERTIGHT SYSTEM; AND ITEMS SPECIFIED IN OTHER SECTIONS OF THESE SPECIFICATIONS THAT BECOME PART OF THE METAL BUILDING SYSTEM.

ALL MATERIAL AND WORKMANSHIP DEFICIENCIES, SYSTEM DETERIORATION CAUSED BY EXPOSURE TO THE ELEMENTS AND/OR INADEQUATE RESISTANCE TO SPECIFIED SERVICE DESIGN LOADS, WATER LEAKS AND WIND UPLIFT DAMAGE MUST BE REPAIRED AS APPROVED BY THE CONTRACTING OFFICER.

ALL MATERIAL DEFICIENCIES, WIND DAMAGE, STRUCTURAL FAILURE AND LEAKAGE ASSOCIATED WITH THE METAL BUILDING SYSTEM COVERED UNDER THIS WARRANTY MUST BE REPAIRED AS APPROVED BY THE CONTRACTING OFFICER.

THIS WARRANTY COVERS THE ENTIRE COST OF REPAIR OR REPLACEMENT, INCLUDING ALL MATERIAL, LABOR, AND RELATED MARKUPS. THE ABOVE REFERENCED WARRANTY COMMENCED ON THE DATE OF FINAL ACCEPTANCE ON (_____) AND WILL REMAIN IN EFFECT FOR STATED DURATION FROM THIS DATE.

SIGNED, DATED, AND NOTARIZED (BY COMPANY PRESIDENT)

_____

(Company President) (Date)

CONTRACTOR'S FIVE (5) YEAR NO PENAL SUM WARRANTY
FOR
METAL BUILDING SYSTEM
(continued)

THE CONTRACTOR HEREBY SUPPLEMENTS THIS WARRANTY WITH WRITTEN WARRANTIES FROM THE MANUFACTURER AND/OR INSTALLER OF THE METAL BUILDING SYSTEM, WHICH IS SUBMITTED ALONG WITH THE CONTRACTOR'S WARRANTY. HOWEVER, THE CONTRACTOR IS ULTIMATELY RESPONSIBLE FOR THIS WARRANTY AS OUTLINED IN THE SPECIFICATIONS AND AS INDICATED IN THIS WARRANTY.

EXCLUSIONS FROM COVERAGE

1. NATURAL DISASTERS, ACTS OF GOD (LIGHTNING, FIRE, EXPLOSIONS, SUSTAINED WIND FORCES IN EXCESS OF THE DESIGN CRITERIA, EARTHQUAKES, AND HAIL).

2. ACTS OF NEGLIGENCE OR ABUSE OR MISUSE BY GOVERNMENT OR OTHER PERSONNEL,INCLUDING ACCIDENTS, VANDALISM, CIVIL DISOBEDIENCE, WAR, OR DAMAGE CAUSED BY FALLING OBJECTS.

3. DAMAGE BY STRUCTURAL FAILURE, SETTLEMENT, MOVEMENT, DISTORTION, WARPAGE, OR DISPLACEMENT OF THE BUILDING STRUCTURE OR ALTERATIONS MADE TO THE BUILDING.

4. CORROSION CAUSED BY EXPOSURE TO CORROSIVE CHEMICALS, ASH OR FUMES GENERATED OR RELEASED INSIDE OR OUTSIDE THE BUILDING FROM CHEMICAL PLANTS, FOUNDRIES, PLATING WORKS, KILNS, FERTILIZER FACTORIES, PAPER PLANTS, AND THE LIKE.

5. FAILURE OF ANY PART OF THE BUILDING SYSTEM DUE TO ACTIONS BY THE OWNER WHICH INHIBIT FREE DRAINAGE FROM THE ROOF, GUTTERS AND DOWNSPOUTS; OR CONDITIONS WHICH CREATE PONDING WATER ON THE ROOF OR AGAINST THE BUILDING SIDING.

6. THIS WARRANTY APPLIES TO THE METAL BUILDING SYSTEM. IT DOES NOT INCLUDE ANY CONSEQUENTIAL DAMAGE TO THE BUILDING INTERIOR OR CONTENTS WHICH IS COVERED BY THE WARRANTY OF CONSTRUCTION CLAUSE INCLUDED IN THIS CONTRACT.

7. THIS WARRANTY CANNOT BE TRANSFERRED TO ANOTHER OWNER WITHOUT WRITTEN CONSENT OF THE CONTRACTOR AND THIS WARRANTY AND THE CONTRACT PROVISIONS TAKE PRECEDENCE OVER ANY CONFLICTS WITH STATE STATUTES. REPORTS OF LEAKS AND BUILDING SYSTEM DEFICIENCIES MUST BE RESPONDED TO WITHIN 48 HOURS OF RECEIPT OF NOTICE BY TELEPHONE OR IN WRITING FROM EITHER THE OWNER, OR CONTRACTING OFFICER. EMERGENCY REPAIRS, TO PREVENT FURTHER ROOF LEAKS, MUST BE INITIATED IMMEDIATELY; A WRITTEN PLAN MUST BE SUBMITTED FOR APPROVAL TO REPAIR OR REPLACE THIS SSSMR SYSTEM WITHIN SEVEN CALENDAR DAYS. ACTUAL WORK FOR PERMANENT REPAIRS OR REPLACEMENT MUST BE STARTED WITHIN 30 DAYS AFTER RECEIPT OF NOTICE, AND COMPLETED WITHIN A REASONABLE TIME FRAME. IF THE CONTRACTOR FAILS TO ADEQUATELY RESPOND TO THE WARRANTY PROVISIONS, AS STATED

CONTRACTOR'S FIVE (5) YEAR NO PENAL SUM WARRANTY
FOR
METAL BUILDING SYSTEM
(Exclusions from Coverage Continued)

IN THE CONTRACT AND AS CONTAINED HEREIN, THE CONTRACTING OFFICER MAY HAVE THE METAL BUILDING SYSTEM REPLACED OR REPAIRED BY OTHERS AND CHARGE THE COST TO THE CONTRACTOR. IN THE EVENT THE CONTRACTOR DISPUTES THE EXISTENCE OF A WARRANTABLE DEFECT, THE CONTRACTOR MAY CHALLENGE THE OWNER'S DEMAND FOR REPAIRS AND/OR REPLACEMENT DIRECTED BY THE OWNER OR CONTRACTING OFFICER EITHER BY REQUESTING A CONTRACTING OFFICER'S DECISION, UNDER THE CONTRACT DISPUTES ACT, OR BY REQUESTING THAT AN ARBITRATOR RESOLVE THE ISSUE. THE REQUEST FOR AN ARBITRATOR MUST BE MADE WITHIN 48 HOURS OF BEING NOTIFIED OF THE DISPUTED DEFECTS. UPON BEING INVOKED THE PARTIES MUST, WITHIN 10 DAYS JOINTLY REQUEST A LIST OF FIVE (5) ARBITRATORS FROM THE FEDERAL MEDIATION AND CONCILIATION SERVICE. THE PARTIES MUST CONFER WITHIN 10 DAYS AFTER RECEIPT OF THE LIST TO SEEK AGREEMENT ON AN ARBITRATOR. IF THE PARTIES CANNOT AGREE ON AN ARBITRATOR, THE CONTRACTING OFFICER AND THE PRESIDENT OF THE CONTRACTOR'S COMPANY WILL STRIKE ONE (1) NAME FROM THE LIST ALTERNATIVELY UNTIL ONE NAME REMAINS. THE REMAINING PERSON WILL BE THE DULY SELECTED ARBITRATOR. THE COSTS OF THE ARBITRATION, INCLUDING THE ARBITRATOR'S FEE AND EXPENSES, COURT REPORTER, COURTROOM OR SITE SELECTED ETC., MUST BE BORNE EQUALLY BETWEEN THE PARTIES. EITHER PARTY DESIRING A COPY OF THE TRANSCRIPT MUST PAY FOR THE TRANSCRIPT. A HEARING WILL BE HELD AS SOON AS THE PARTIES CAN MUTUALLY AGREE. A WRITTEN ARBITRATOR'S DECISION WILL BE REQUESTED NOT LATER THAN 30 DAYS FOLLOWING THE HEARING. THE DECISION OF THE ARBITRATOR WILL NOT BE BINDING; HOWEVER, IT WILL BE ADMISSIBLE IN ANY SUBSEQUENT APPEAL UNDER THE CONTRACT DISPUTES ACT.

POST A FRAMED COPY OF THIS WARRANTY IN THE MECHANICAL ROOM OR OTHER APPROVED LOCATION DURING THE ENTIRE WARRANTY PERIOD.

-- End of Section --

SECTION 21 13 13.00 20

WET PIPE SPRINKLER SYSTEM, FIRE PROTECTION
04/08

PART 1 GENERAL

1.1 REFERENCES

The publications listed below form a part of this specification to the extent referenced. The publications are referred to within the text by the basic designation only.

ASTM INTERNATIONAL (ASTM)

ASTM D709	(2013) Laminated Thermosetting Materials

FM GLOBAL (FM)

FM APP GUIDE	(updated on-line) Approval Guide http://www.approvalguide.com/

NATIONAL FIRE PROTECTION ASSOCIATION (NFPA)

NFPA 13	(2013; TIA 10-1; TIA 11-2; ERTA 2014; TIA 14-3) Standard for the Installation of Sprinkler Systems
NFPA 1963	(2014) Standard for Fire Hose Connections
NFPA 24	(2013) Standard for the Installation of Private Fire Service Mains and Their Appurtenances

UNDERWRITERS LABORATORIES (UL)

UL 668	(2004; Reprint Dec 2012) Hose Valves for Fire-Protection Service
UL Fire Prot Dir	(2012) Fire Protection Equipment Directory

1.2 SYSTEM DESCRIPTION

Design and provide automatic wet pipe fire extinguishing sprinkler systems for complete fire protection coverage throughout Filter and OPS buildings.

1.3 SPRINKLER SYSTEM DESIGN

Except as modified herein, design automatic wet pipe fire extinguishing sprinkler systems in accordance with the required and advisory provisions of NFPA 13 , including all recommendations and advisory portions, which shall be considered mandatory; this includes advisory provisions listed in the appendices of such standard(s), as though the word "shall" had been substituted for the word "should" wherever it appears. Design system by hydraulic calculations for uniform distribution of water over the design area. Hydraulic calculations shall assume a minimum 80 kPa pressure loss for the backflow preventer assembly. Locate sprinklers in a consistent pattern with ceiling grid, lights, and air supply diffusers. Provide

sprinklers and piping system layout. All Devices and equipment for fire protection service shall be UL Fire Prot Dir listed or FM APP GUIDE approved for use in wet pipe sprinkler systems. Provide seismic protection for the sprinkler system. Design and install seismic protection in accordance with the requirements of NFPA 13 section titled "Protection of Piping Against Damage Where Subject to Earthquakes."

1.3.1 Location of Sprinklers

Sprinklers in relation to the ceiling and the spacing of sprinklers shall not exceed that permitted by NFPA 13 for light, and ordinary hazard occupancy as indicated on the contract drawings. Uniformly space sprinklers on the branch piping. Sprinklers shall provide coverage throughout 100 percent of the building. This includes, but is not limited to, telephone rooms, electrical equipment rooms, boiler rooms, switchgear rooms, transformer rooms, and other electrical and mechanical spaces.

1.3.2 Water Distribution

Distribution shall be uniform throughout the area in which the sprinklers will open. Discharge from individual sprinklers in hydraulically most remote area shall be between 100 percent and 120 percent of the specified density.

1.3.3 Density of Application of Water

Size pipe to provide the specified density when the system is discharging the specified total maximum required flow. Application to horizontal surfaces below the sprinklers shall be as indicated on the contract drawings.

1.3.4 Sprinkler Discharge Area

Area shall be the hydraulically most remote as indicated on the contract drawings. Area reductions and increases from NFPA 13 shall not be applied to this area.

1.3.5 Outside Hose Allowances

Hydraulic calculations shall include a hose allowance of 946 L/m for outside hose streams.

1.3.6 Water Supply

Base hydraulic calculations on the water supply data shown on the fire protection contract drawings at the junction with the existing water distribution piping system.

1.4 SUBMITTALS

Government approval is required for submittals with a "G" designation; submittals not having a "G" designation are for Contractor Quality Control approval.

Partial submittals and submittals not fully complying with the requirements and recommended practices of NFPA 13 and this specification section shall be returned disapproved without review. This contract stipulation is non-negotiable.

Submittals with an "S" are for inclusion in the Sustainability Notebook, in conformance to Section 01 33 29 SUSTAINABILITY REPORTING. Submit the following in accordance with Section 01 33 00 SUBMITTAL PROCEDURES:

SD-02 Shop Drawings

Shop Drawings; G

Prepare A1 841 by 594 mm detail working drawings of sprinklers and piping. Floor plans shall be drawn to a scale not less than 1:100. Show data essential for proper installation of each system. Show details, plan view, elevations and sections of the systems supply and piping. Show piping schematic of systems supply, devices, valves, pipe and fittings. Show point to point electrical wiring diagrams. Submit drawings signed by a registered fire protection engineer. Provide three copies of the Sprinkler System Shop Drawings, no later than 21 days prior to the start of sprinkler system installation.

SD-03 Product Data

Pipe; G
Fittings ; G
Valves, including gate, check, and globe ; G
Sprinklers ; G
Pipe hangers and supports ; G
Sprinkler Alarm Switches; G
Fire department connections ; G
Mechanical couplings ; G
Backflow Prevention Assembly ; G
Seismic Bracing ; G

Annotate descriptive data to show the specific model, type, and size of each item. Catalog cuts shall also indicate UL Listing/FM Approval and country of manufacture.

SD-05 Design Data

Hydraulic Calculations; G

Submit computer program generated hydraulic calculations to substantiate compliance with hydraulic design requirements. Calculations shall be performed by computer using software intended specifically for fire protection system design. Calculations shall include isometric diagram indicating hydraulic nodes and pipe segments.Submit name of software program used.

SD-06 Test Reports

request to schedule Preliminary Tests; G

Preliminary Test Report; G

Three copies of the completed Preliminary Test Report, no later that 7 days after the completion of the Preliminary Tests. The Preliminary Tests Report shall include both the Contractor's Material and Test Certificate for Underground Piping and the Contractor's Material and Test Certificate for Aboveground Piping. All items in the Preliminary Tests Report shall be signed

by the Fire Protection Engineer.

request to schedule Final Acceptance Test; G

Final Acceptance Test Report; G

Three copies of the completed Final Acceptance Tests Reports, no later that 7 days after the completion of the Final Acceptance Tests. All items in the Final Acceptance Report shall be signed by the Fire Protection Engineer.

SD-07 Certificates

Inspection by Fire Protection Engineer; G

Concurrent with the Final Acceptance Test Report, certification by the Fire Protection Engineer that the sprinkler system is installed in accordance with the contract requirements, including signed approval of the Preliminary and Final Acceptance Test Reports.

Fire Protection Engineer; G

The name and documentation of certification of the proposed Fire Protection Engineer, no later than 14 days after the Notice to Proceed and prior to the submittal of the sprinkler system drawings and hydraulic calculations.

Sprinkler System Installer; G

Submit data showing the Sprinkler System Installer has successfully installed systems of the same type and design as specified herein, Data shall include names and locations of at least two installations where the Contractor, or the subcontractor referred to above, has installed such systems. Indicate type and design of each system and certify that each system has performed satisfactorily in the manner intended for not less than 18 months. Provide NICET certification of the system technician. Contractor shall submit data along with submittal of the Fire Protection Engineer Qualifications.

SD-10 Operation and Maintenance Data

Operating and Maintenance Instructions

Submit in accordance with Section 01 78 23 OPERATION AND MAINTENANCE DATA as supplemented and modifies by this specification section.

Provide six manuals in accordance with NFPA 13. The manuals shall include the manufacturer's name, model number, parts list, list of parts and tools that should be kept in stock by the owner for routine maintenance including the name of a local supplier, simplified wiring and controls diagrams, troubleshooting guide, and recommended service organization (including address and telephone number) for each item of equipment.

SD-11 Closeout Submittals

As-built drawings

As-built shop drawings, at no later than 14 days after completion of the Final Tests. The Sprinkler System Drawings shall be updated to reflect as-built conditions after all related work is completed. Provide electronic drawings in dwg or pdf format.

On-site training

1.5 QUALIFICATIONS

1.5.1 Sprinkler System Installer

The Sprinkler System Installer shall be regularly engaged in the installation of the type and complexity of system specified in the Contract documents, and shall have served in a similar capacity for at least three systems that have performed in the manner intended for a period of not less than 6 months. Installation drawings, shop drawings and as-built drawings shall be prepared, by or under the supervision of, an system technician who is experienced with the types of works specified herein, and is currently certified by the National Institute for Certification in Engineering Technologies (NICET) as an engineering technician with minimum Level III certification in Automatic Sprinkler System program or by a fire protection engineer.

1.6 QUALITY ASSURANCE

1.6.1 Material and Equipment Qualifications

Provide materials and equipment that are standard products of manufacturers regularly engaged in the manufacture of such products, which are of a similar material, design and workmanship. Standard products shall have been in satisfactory commercial or industrial use for 2 years prior to bid opening. The 2-year use shall include applications of equipment and materials under similar circumstances and of similar size. The product shall have been for sale on the commercial market through advertisements, manufacturers' catalogs, or brochures during the 2 year period.

1.6.2 Alternative Qualifications

Products having less than a two-year field service record will be acceptable if a certified record of satisfactory field operation for not less than 6000 hours, exclusive of the manufacturer's factory or laboratory tests, can be shown.

1.6.3 Manufacturer's Nameplate

Each item of equipment shall have a nameplate bearing the manufacturer's name, address, model number, and serial number securely affixed in a conspicuous place; the nameplate of the distributing agent will not be acceptable.

1.6.4 Field Fabricated Nameplates

ASTM D709. Provide laminated plastic nameplates for each equipment enclosure, relay, switch, and device; as specified in the technical sections or as indicated on the drawings. Each nameplate inscription shall identify the function and, when applicable, the position.

Nameplates shall be melamine plastic, 3 mm thick, white with black center core. Surface shall be matte finish. Corners shall be square. Accurately align lettering and engrave into the core. Minimum size of nameplates shall be 25 by 65 mm. Lettering shall be a minimum of 6.35 mm high normal block style.

1.7 ACCESSIBILITY

Install all work so that parts requiring periodic inspection, operation, maintenance, and repair are readily accessible. Install concealed valves, expansion joints, controls, dampers, and equipment requiring access, in locations freely accessible through access doors.

1.8 DELIVERY, STORAGE AND HANDLING

All equipment delivered and placed in storage shall be housed in a manner to preclude any damage from the weather, humidity and temperature variations, dirt and dust, or other contaminants. Additionally, all pipes shall either be capped or plugged until installed.

PART 2 PRODUCTS

2.1 UNDERGROUND PIPING COMPONENTS

2.1.1 Pipe

Pipe shall comply with NFPA 24. Minimum pipe size shall be 150 mm. Piping more than 1.50 meters outside the building walls shall comply with Section 33 11 00 WATER DISTRIBUTION.

2.1.2 Buried Utility Warning and Identification Tape

Provide detectable aluminum foil plastic backed tape or detectable magnetic plastic tape manufactured specifically for warning and identification of buried piping. Tape shall be detectable by an electronic detection instrument. Provide tape in rolls, 80 mm minimum width, color coded for the utility involved with warning and identification imprinted in bold block letters continuously and repeatedly over the entire tape length. Warning and identification shall read "CAUTION BURIED WATER PIPING BELOW" or similar wording. Use permanent code and letter coloring unaffected by moisture and other substances contained in trench backfill material.

2.2 ABOVEGROUND PIPING COMPONENTS

All components of the aboveground piping shall fully comply with the requirements and recommended practices of NFPA 13 and this specification section. Aboveground piping shall be steel.

2.2.1 Steel Pipe

Pipe shall be rigid black steel. Steel pipe shall be Schedule 40 for sizes less than 50 mm and Schedule 10 for sizes 50 mm or larger. Fittings into which sprinklers, sprinkler riser nipples, or drop nipples are threaded shall be welded, threaded, or grooved-end type. Plain-end fittings with mechanical couplings, fittings that use steel gripping devices to bite into the pipe and segmented welded fittings shall not be permitted. Rubber gasketed grooved-end pipe and fittings with mechanical couplings shall be permitted in pipe sizes 40 mm and larger. Fittings, mechanical couplings,

and rubber gaskets shall be supplied by the same manufacturer. Steel piping with wall thickness less than Schedule 30 shall not be threaded. Side outlet tees using rubber gasketed fittings shall not be permitted. Sprinkler pipe and fittings shall be metal.

2.2.2 Grooved Mechanical Joints and Fittings

Grooved couplings, fittings and grooving tools shall be products of the same manufacturer.

2.2.3 Sprinklers

Provide nominal 12.7 mm or 13.5 mm orifice sprinklers. Sprinklers with internal O-rings shall not be used. Sprinklers shall be used in accordance with their listed coverage limitations. Provide Recessed Pendent orUpright quick response sprinklers. Sprinklers shall have a brass finish. Temperature classification shall be ordinary. Sprinklers in high heat areas including attic spaces or in close proximity to unit heaters shall have temperature classification in accordance with NFPA 13. Extended coverage sprinklers shall not be used. Deflector shall not be more than 80 mm below suspended ceilings. Ceiling plates shall not be more than 12.7 mm deep. Ceiling cups shall not be permitted.

2.2.4 Valves

Provide valves of types approved for fire service. Valves shall open by counterclockwise rotation. Provide an OS&Y or an indicating butterfly valve beneath each alarm check. Check valves shall be clear opening swing-check type with inspection and access cover plate for sizes 200 mm and larger. Each control valve shall be electrically supervised; minimum contact ratings shall be 2.5 amps at 24 volts DC. Provide supervision against valve closure or tampering of valve.

2.2.5 Pipe Supports

Provide Pipe hangers and supports and Seismic Bracing in accordance with NFPA 13.

2.2.6 Fire Department Connections

Fire department connection shall be projecting type with cast brass body, matching wall escutcheon lettered "Auto Spkr" with a polished brass finish. The connection shall have two inlets with individual self-closing clappers, caps with drip drains and chains. Female inlets shall have 65 mm diameter American National Fire Hose Connection Screw Threads (NH) per NFPA 1963.

2.2.7 Backflow Prevention Assembly

Provide listed reduced pressure principle valve assembly backflow preventer. Each check valve shall have a drain. Backflow prevention assemblies shall have current "Certificate of Approval from the Foundation for Cross-Connection Control and Hydraulic Research, FCCCHR List. Listing of the specific make, model, design, and size in the FCCCHR List shall be acceptable as the required documentation."

2.3 ALARM INITIATING AND SUPERVISORY DEVICES

2.3.1 Sprinkler Alarm Switches

Provide vane type flow switch(es) with circuit opener or closer for the automatic transmittal of an alarm over the facility fire alarm system. Connection of switch shall be under Section 28 31 63.00 20 ANALOG/ADDRESSABLE INTERIOR FIRE ALARM SYSTEM or28 31 76 INTERIOR FIRE ALARM AND MASS NOTIFICATION SYSTEM. Vane type Alarm actuating devices shall have mechanical diaphragm controlled retard device adjustable from 10 to 60 seconds and shall instantly recycle.

2.3.2 Valve Supervisory (Tamper) Switch

Switch shall be suitable for mounting to the type of control valve to be supervised open. The switch shall be tamper resistant and contain one set of SPDT (Form C) contacts arranged to transfer upon removal of the housing cover or closure of the valve of more than two rotations of the valve stem.

2.4 ACCESSORIES

2.4.1 Sprinkler Cabinet

Provide metal cabinet with extra sprinklers and sprinkler wrench adjacent to each alarm valve. The number and types of extra sprinklers shall be as specified in NFPA 13.

2.4.2 Pipe Escutcheon

Provide split hinge metal plates for piping entering walls, floors, and ceilings in exposed spaces. Provide polished stainless steel plates or chromium-plated finish on copper alloy plates in finished spaces. Provide paint finish on metal plates in unfinished spaces.

PART 3 EXECUTION

3.1 INSPECTION BY FIRE PROTECTION ENGINEER

The Fire Protection Engineer shall inspect the sprinkler system periodically during the installation to assure the sprinkler system is being provided and installed in accordance with the contract requirements and the approved sprinkler system submittal(s). The Fire Protection Engineer shall attend both the preliminary and final tests, and shall sign the test results. After the preliminary testing has been completed, the Fire Protection Engineer, shall certify in writing the system is ready for the final inspections and tests. This report shall document any discrepancies found and what actions will be taken to correct. Any discrepancy noted during the periodic site visits or the preliminary testing shall be brought to the attention of the Contracting Officer in writing, no later than three working days after the discrepancy is discovered.

3.2 UNDERGROUND PIPING INSTALLATION

The methods of fabrication and installation of the underground piping shall fully comply with the requirements and recommended practices of NFPA 13, NFPA 24 and the contract drawings.

3.3 ABOVEGROUND PIPING INSTALLATION

The methods of fabrication and installation of the aboveground piping shall fully comply with the requirements and recommended practices of NFPA 13 and this specification section.

3.3.1 Piping in Finished Areas

In areas with suspended or dropped ceilings and in areas with concealed spaces above the ceiling, piping shall be concealed above ceilings. Piping shall be inspected, tested and approved before being concealed. Risers and similar vertical runs of piping in finished areas shall be concealed.

3.3.2 Pendent Sprinklers

Where sprinklers are installed below suspended or dropped ceilings, drop nipples shall be cut such that sprinkler ceiling plates or escutcheons are of a uniform depth throughout the finished space. The outlet of the reducing coupling shall not extend more than 25 mm below the underside of the ceiling. Pendent sprinklers in suspended ceilings shall be a minimum of150 mm from ceiling grids.

3.3.3 Reducers

Reductions in pipe sizes shall be made with one-piece tapered reducing fittings. Bushings are prohibited.

3.3.4 Pipe Penetrations

Cutting structural members for passage of pipes or for pipe-hanger fastenings will not be permitted. Pipes that must penetrate concrete or masonry walls or concrete floors shall be core-drilled and provided with pipe sleeves. Each sleeve shall be Schedule 40 galvanized steel, ductile iron or cast iron pipe and shall extend through its respective wall or floor and be cut flush with each wall surface. Sleeves shall provide required clearance between the pipe and the sleeve per NFPA 13. The space between the sleeve and the pipe shall be firmly packed with mineral wool insulation. Where pipes penetrate fire walls, fire partitions, or floors, pipes shall be fire stopped in accordance with Section 07 84 00 FIRESTOPPING. In penetrations that are not fire-rated or not a floor penetration, the space between the sleeve and the pipe shall be sealed at both ends with plastic waterproof cement that will dry to a firm but pliable mass or with a mechanically adjustable segmented elastomer seal.

3.3.5 Inspector's Test Connection

Provide test connections approximately 2 meters above the floor for each sprinkler system or portion of each sprinkler system equipped with an alarm device. Provide test connection piping to a drain location that can accept full flow where the discharge will be readily visible and where water may be discharged without property damage. Discharge to floor drains, janitor sinks or similar fixtures shall not be permitted. Provide discharge orifice of same size as corresponding sprinkler orifice. The penetration of the exterior wall shall be no greater than 0.61 meter above finished grade.

3.3.6 Backflow Preventer Test Connection

Provide downstream of the backflow prevention assembly UL 668 hose valves with 65 mm National Standard male hose threads with cap and chain. Provide one valve for each 16 L/s of system demand or fraction thereof. Provide a permanent sign in accordance with paragraph entitled "Identification Signs" which reads, "Test Valve."

3.3.7 Drains

Main drain piping shall be provided to discharge at a safe point outside the building. Auxiliary drains shall be provided as required by NFPA 13.

3.3.8 Installation of Fire Department Connection

Connection shall be mounted on the exterior wall approximately 900 mm above finished grade. The piping between the connection and the check valve shall be provided with an automatic drip in accordance with NFPA 13 and arranged to drain to the outside.

3.3.9 Identification Signs

Signs shall be affixed to each control valve, inspector test valve, main drain, auxiliary drain, test valve, and similar valves as appropriate or as required by NFPA 13. Valve identification signs shall be minimum 150 mm wide by 50 mm high with enamel baked finish on minimum 1.214 mm steel or 0.6 mm aluminum with red letters on a white background or white letters on red background. Hydraulic design data nameplates shall be permanently affixed to each sprinkler riser as specified in NFPA 13.

3.4 ELECTRICAL WORK

Except as supplemented and modified herein, electric equipment and wiring shall be in accordance with Section 26 20 00 INTERIOR DISTRIBUTION SYSTEM. Alarm signal wiring connected to the building fire alarm control system shall be in accordance with 28 31 63.00 20 ANALOG/ADDRESSABLE INTERIOR FIRE ALARM SYSTEM or 28 31 76 INTERIOR FIRE ALARM AND MASS NOTIFICATION SYSTEM.

3.5 PIPE PAINTING AND COLOR CODE MARKING

Paint and color code mark sprinkler piping system as specified in Section 09 90 00 PAINTS AND COATINGS.

3.6 PRELIMINARY TESTS

The system, including the underground water mains, and the aboveground piping and system components, shall be tested to assure that equipment and components function as intended. The underground and aboveground interior piping systems and attached appurtenances subjected to system working pressure shall be tested in accordance with NFPA 13 and NFPA 24. Submit request to schedule Preliminary Tests, no later than 14 days prior to the proposed start of the tests. Upon completion of specified tests, the Contractor shall submit for approval a Preliminary Test Report.

3.6.1 Underground Piping

3.6.1.1 Flushing

Underground piping shall be flushed in accordance with NFPA 24.

3.6.1.2 Hydrostatic Testing

New underground piping shall be hydrostatically tested in accordance with NFPA 24.

3.6.2 Aboveground Piping

3.6.2.1 Hydrostatic Testing

Aboveground piping shall be hydrostatically tested in accordance with NFPA 13.

3.6.2.2 Backflow Prevention Assembly Forward Flow Test

Each backflow prevention assembly shall be tested at system flow demand, including all applicable hose streams, as specified in NFPA 13. The Contractor shall provide all equipment and instruments necessary to conduct a complete forward flow test, including 65 mm diameter hoses, playpipe nozzles, calibrated pressure gauges, and pitot tube gauge. The Contractor shall provide all necessary supports to safely secure hoses and nozzles during the test. At the system demand flow, the pressure readings and pressure drop (friction) across the assembly shall be recorded. A metal placard shall be provided on the backflow prevention assembly that lists the pressure readings both upstream and downstream of the assembly, total pressure drop, and the system test flow rate determined during the preliminary testing. The pressure drop shall be compared to the manufacturer's data and the readings observed during the final inspections and tests.

3.7 FINAL ACCEPTANCE TEST

Final Acceptance Test shall begin only when the Preliminary Test Report has been approved. Submit request to schedule Final Acceptance Test, no later than 30 days prior to the proposed start of the tests. Notification shall include a copy of the Contractor's Material & Test Certificates.

An experienced technician regularly employed by the system installer shall be present during the inspection. The Fire Protection Engineer shall attend the final inspections and tests. At this inspection, repeat any or all of the required tests as directed. Correct defects in work provided by the Contractor, and make additional tests until the systems comply with contract requirements. Furnish appliances, equipment, electricity, instruments, connecting devices, and personnel for the tests. The Government will furnish water for the tests. The Atlantic Division, Naval Facilities Engineering Command, Fire Protection Engineer, will witness formal tests and approve systems before they are accepted. Submit Final Acceptance Test Report, no later than 15 days after the completion of hte tests.

3.8 ON-SITE TRAINING

Submit request to schedule the On-site Training, at least 14 days prior to the start of related training but prior to the final inspections and tests. The sprinkler contractor shall conduct a training course for operating and maintenance personnel as designated by the Contracting Officer. Training shall be provided for a period of 8 hours of normal working time and shall start after the system is functionally complete and after the Final Acceptance Test. The On-Site Training shall cover all of the items contained in the approved Operating and Maintenance Instructions.

-- End of Section --