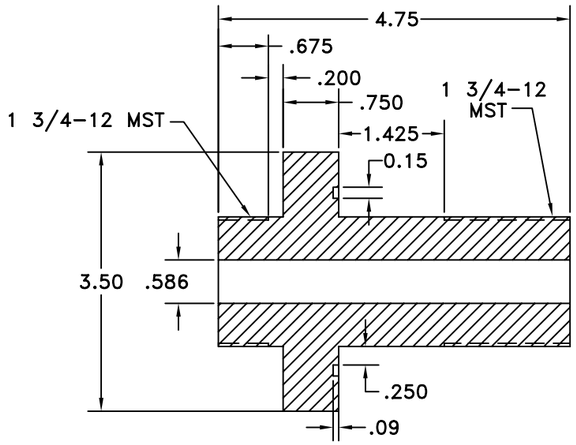


SECTION "A"

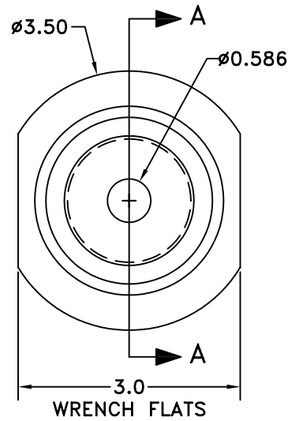


1/2" HOLLOW BOLT

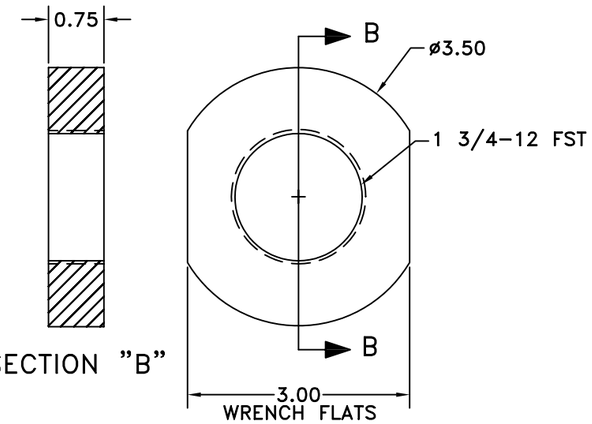


SECTION "B"

1/2" NUT

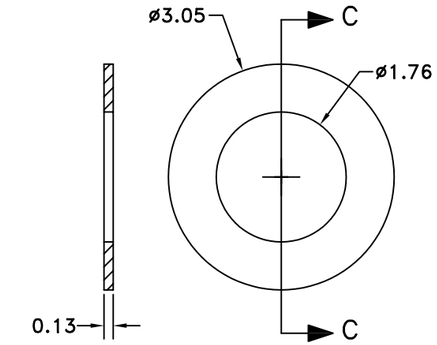


SECTION "C"

1/2" WASHER

1/2" HOLLOW BOLT
DETAIL "C-1"
OX-16 LP-43

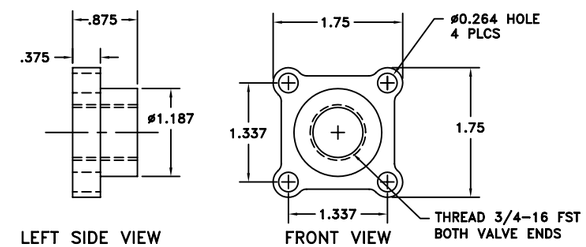


VALVE END

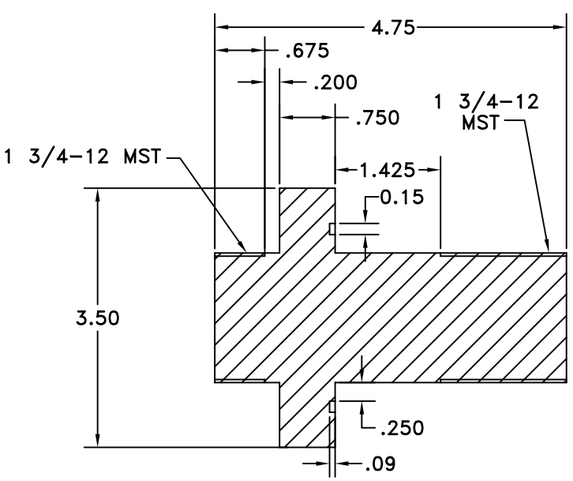


SECTION "A"

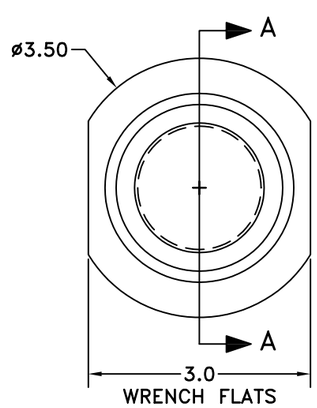


1/2" PENETRATOR BLANK

1/2" PENETRATOR BLANK
DETAIL "C-2"
LP-38

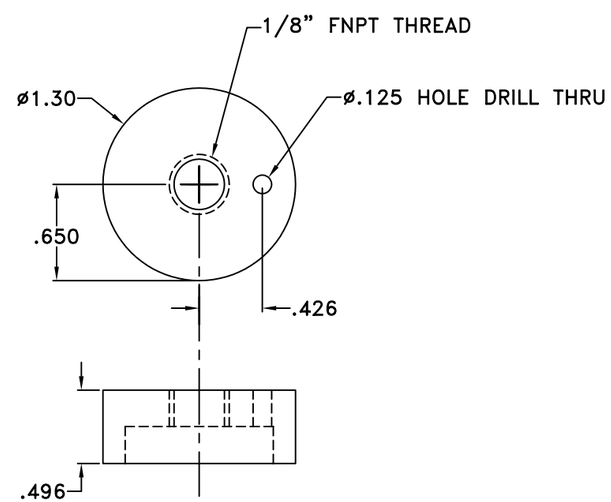


MODIFIED OXYGEN MONITOR SENSOR PROBE CAP
DETAIL "C-4"

E20.

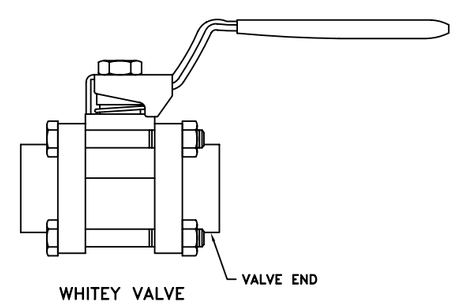


WHITEY VALVE

MODIFIED BALL VALVE FLANGE
DETAIL "C-3"
OX-12

| THIS DRAWING HAS BEEN COMPUTER GENERATED USING CAD. DO NOT MAKE MANUAL CHANGES. | SIZE | CAGE CODE | | DWG NO. | REV |
|---|---|---|---|---|---|
| | D | 53711 | 592 | 7371361 | – |
| | SCALE UNLESS NOTED | NONE | | SHEET 15 OF 24 | |

10/13/2011 10:10:08 AM