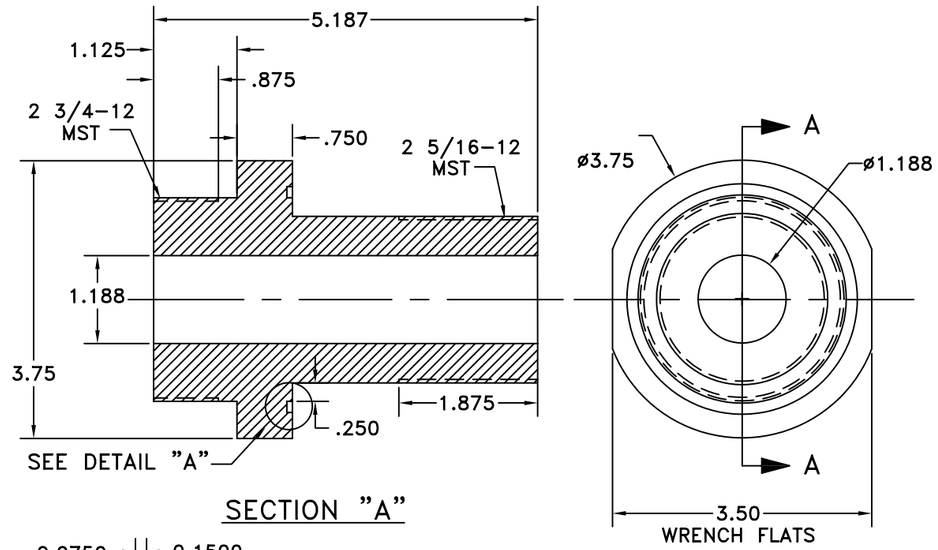

SECTION "A"

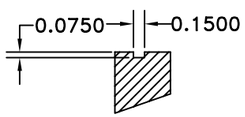

DETAIL "A"

1 1/4" X 1" HOLLOW BOLT PENETRATOR

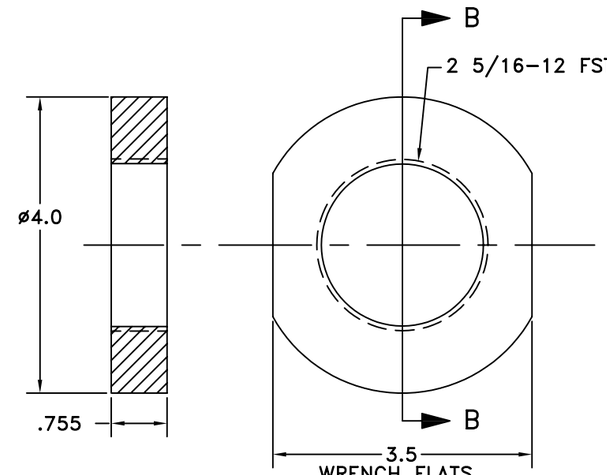

SECTION "B"

1 1/4" X 1" HOLLOW BOLT NUT

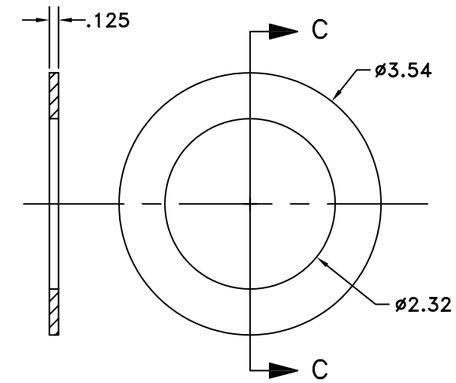

SECTION "C"

1 1/4" X 1" HOLLOW BOLT WASHER

1 1/4" X 1" HOLLOW BOLT PENETRATOR
DETAIL "C-7"
LP-28

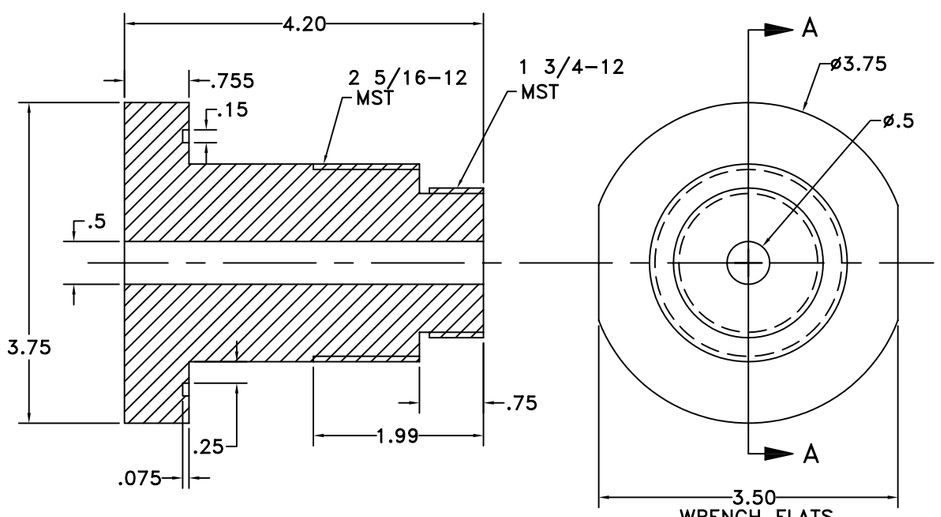

SECTION "A"

1" X 1/2" HOLLOW BOLT PENETRATOR

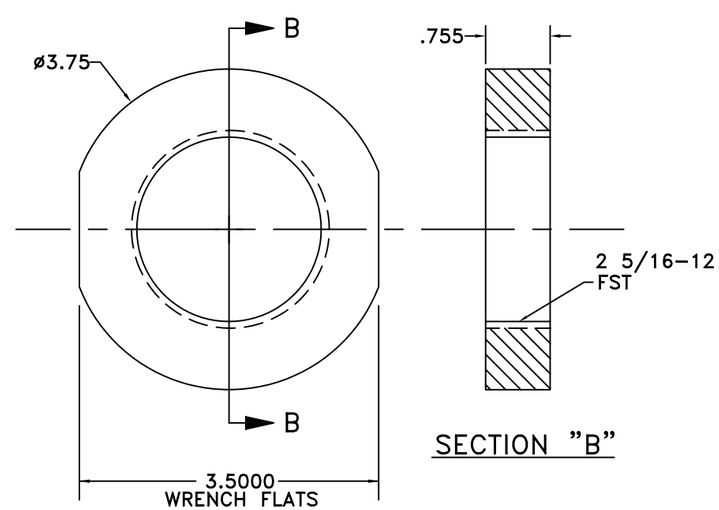

SECTION "B"

1" X 1/2" HOLLOW BOLT NUT

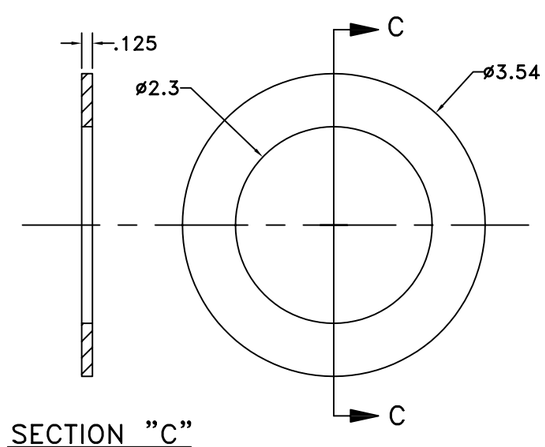

SECTION "C"

1" X 1/2" HOLLOW BOLT WASHER

1" x 1/2" HOLLOW BOLT PENETRATOR
DETAIL "C-8"
LP-32

THIS DRAWING HAS BEEN COMPUTER GENERATED USING CAD. DO NOT MAKE MANUAL CHANGES.	SIZE D	CAGE CODE 53711	592	DWG NO. 7371361	REV –
	SCALE UNLESS NOTED NONE			SHEET 17 OF 24	

10/13/2011 10:09:37 AM