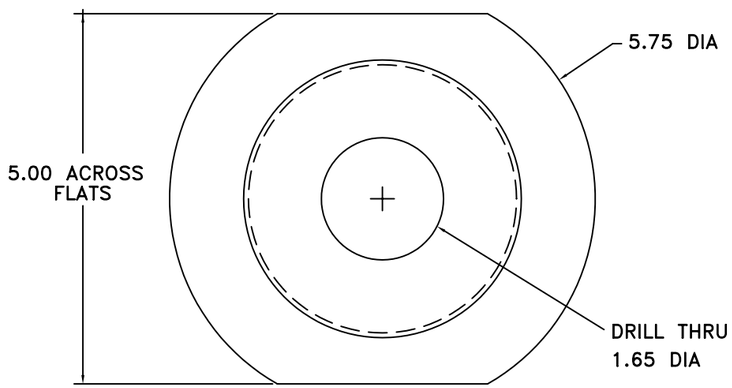

TOP VIEW

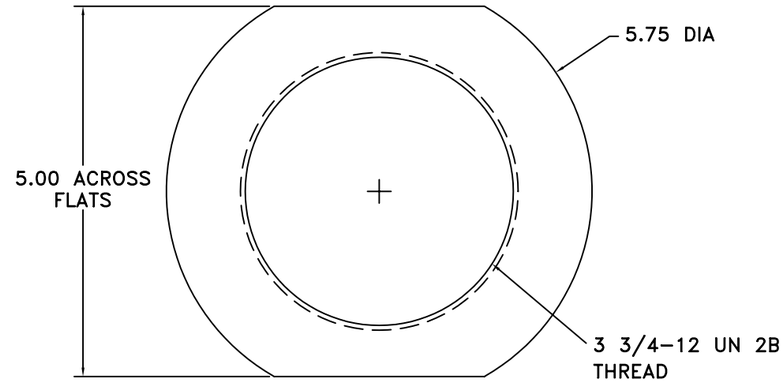

TOP VIEW

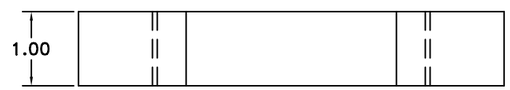

FRONT VIEW

3 3/4–12 NUT

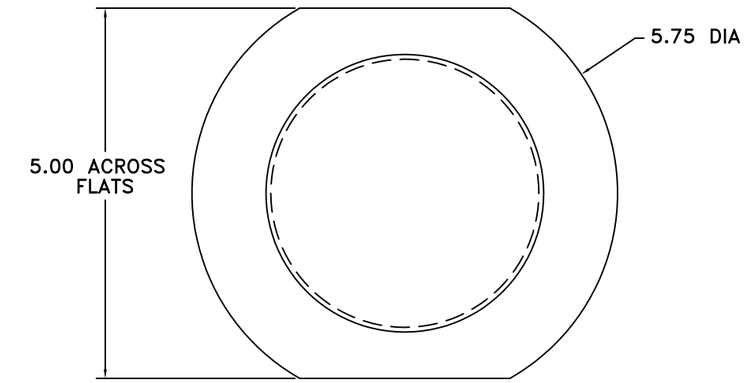

TOP VIEW

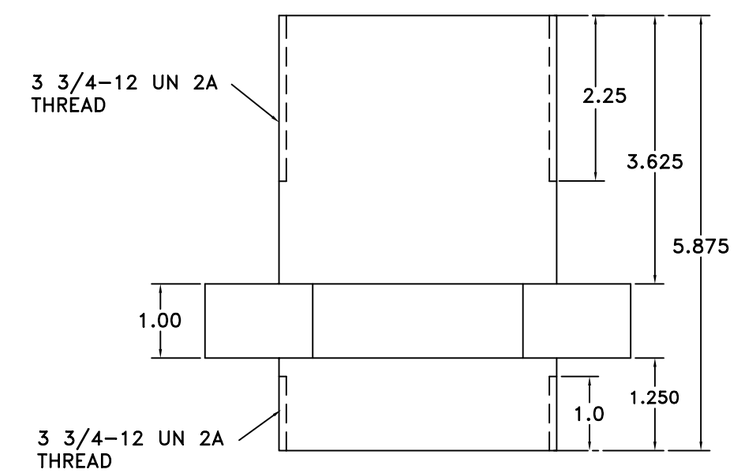

FRONT VIEW

2" PENETRATOR BLANK

DETAIL "C–10"
LP–37

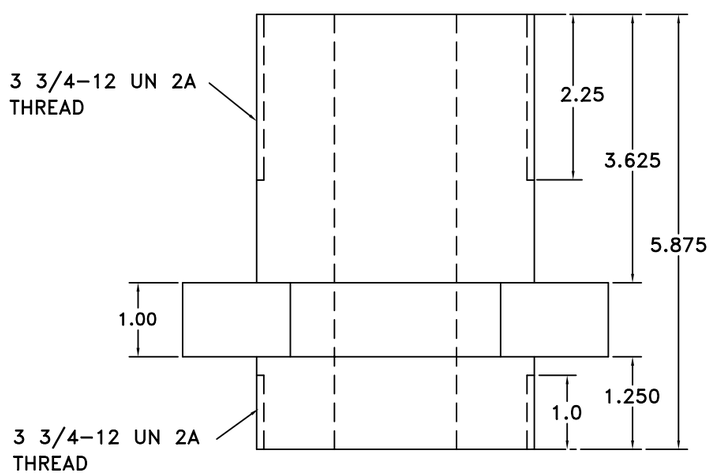

FRONT VIEW

2" HOLLOW BOLT

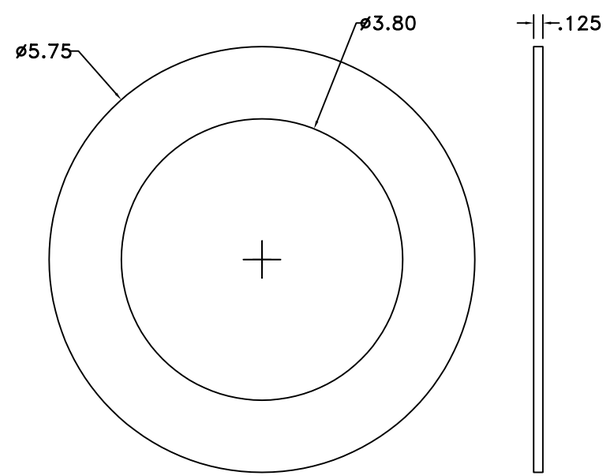

3 3/4–12 WASHER

2" HOLLOW BOLT

DETAIL "C–9"
EX–20

THIS DRAWING HAS BEEN COMPUTER GENERATED USING CAD. DO NOT MAKE MANUAL CHANGES.	SIZE D	CAGE CODE 53711	592	DWG NO. 7371361	REV –
	SCALE UNLESS NOTED NONE			SHEET 18 OF 24	

10/13/2011 10:07:58 AM