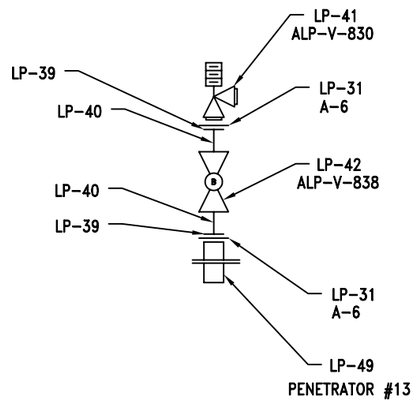

INNER LOCK RELIEF VALVE LINE

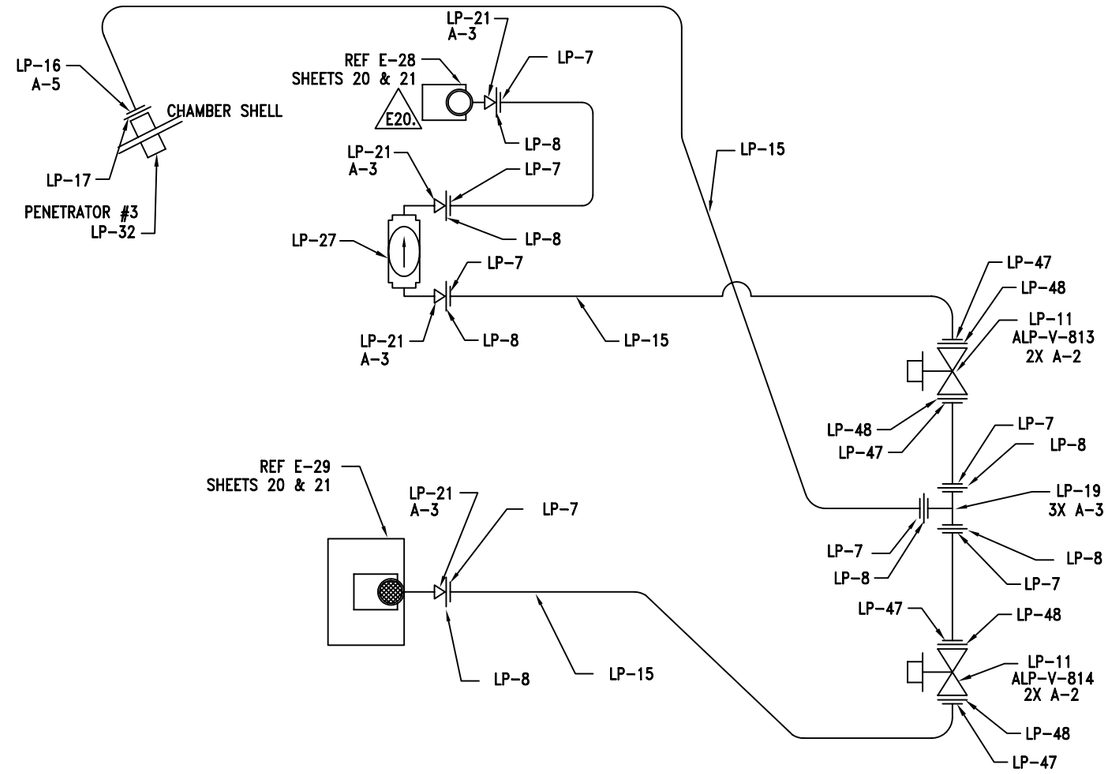

OXYGEN MONITOR AND CARBON DIOXIDE MONITOR LINES

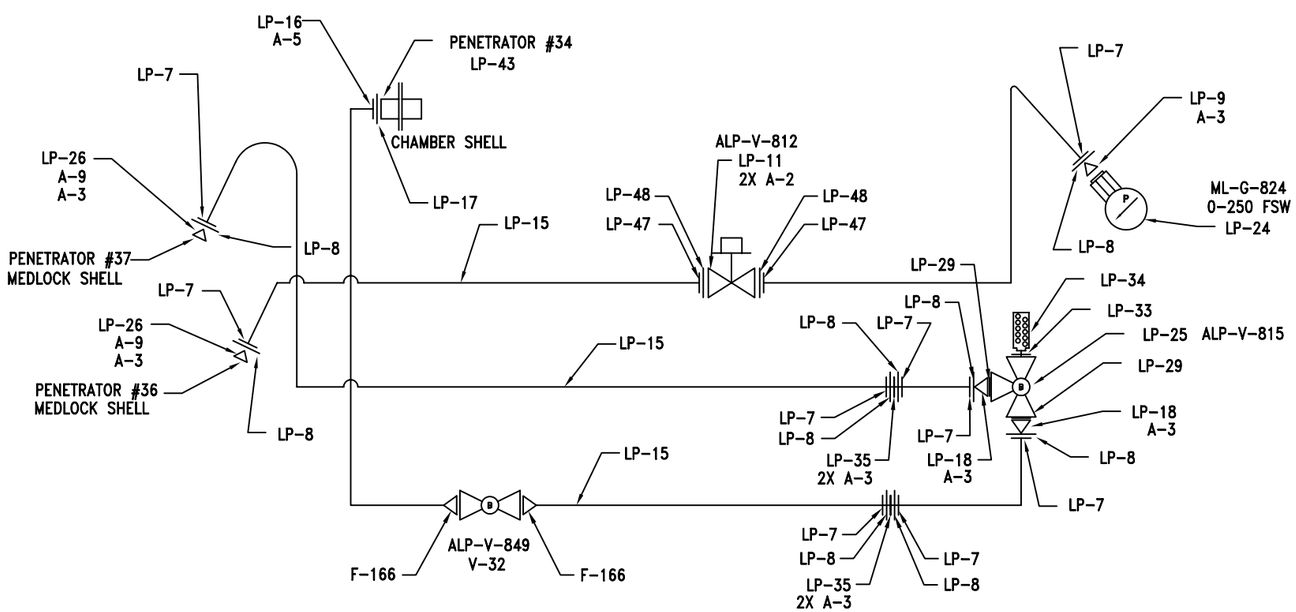

MEDLOCK SUPPLY & EXHAUST LINES

LP AIR SYSTEM
INNER LOCK RELIEF VALVE LINE
O2 MONITOR & CO2 MONITOR LINES
MEDLOCK SUPPLY & EXHAUST LINES
PARTS LIST ON SHEETS 3 AND 4

	SIZE	CAGE CODE		DWG NO.	REV
THIS DRAWING HAS BEEN COMPUTER GENERATED USING CAD. DO NOT MAKE MANUAL CHANGES.	D	53711	592	7371361	A
	SCALE UNLESS NOTED	NONE		SHEET 7 OF 24	

10/13/2011 10:13:59 AM