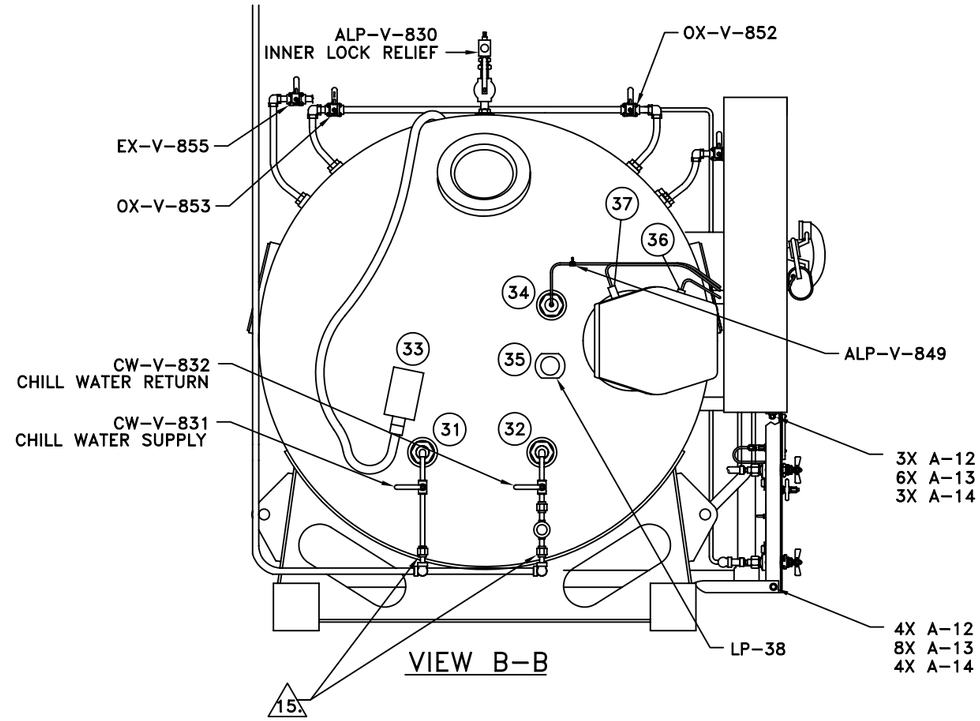

VIEW B-B

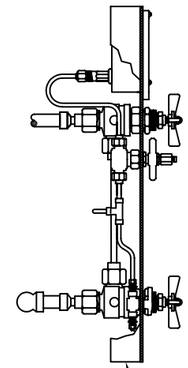

BACK OF PANEL TO BE FRAMED WITH 1 1/2" x 1 1/2" x 3/16" AL. ANGLE

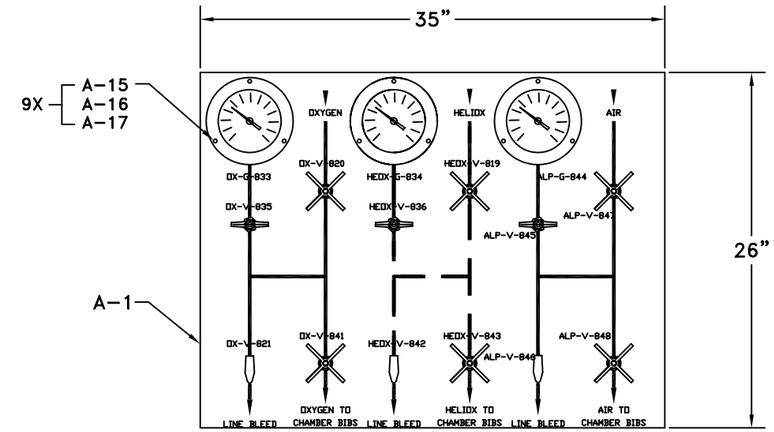

BIBS PANEL
(FRONT)

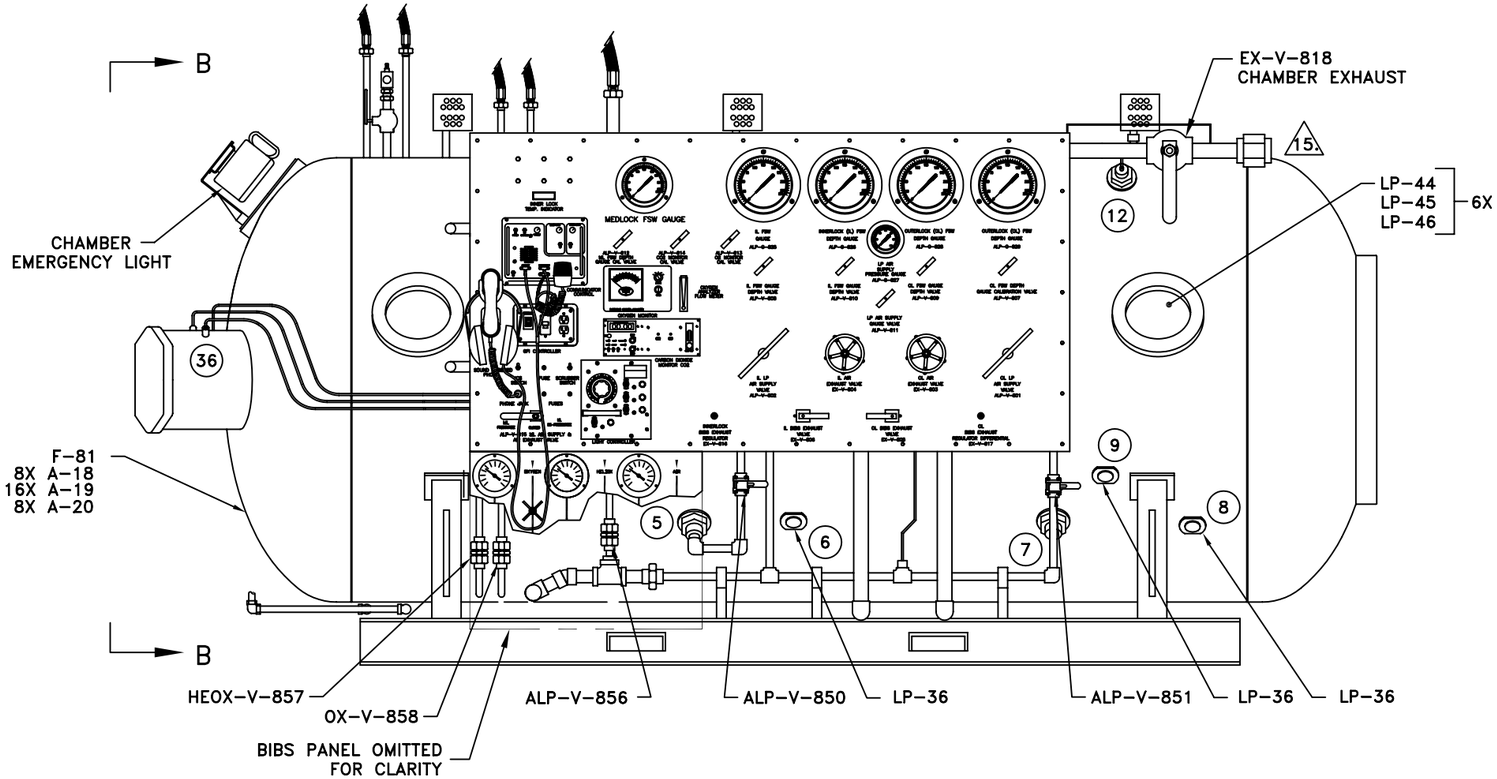

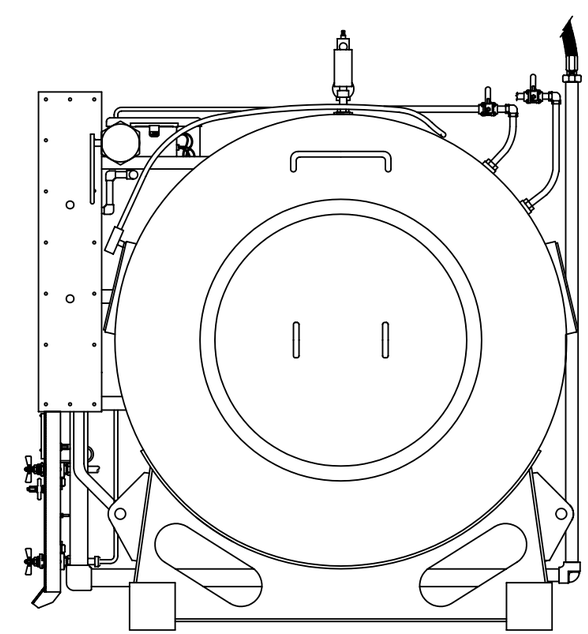

	SIZE	CAGE CODE		DWG NO.	REV
THIS DRAWING HAS BEEN COMPUTER GENERATED USING CAD. DO NOT MAKE MANUAL CHANGES.	D	53711	592	7371361	A
	SCALE UNLESS NOTED	NONE		SHEET 12 OF 24	

10/13/2011 10:28:13 AM