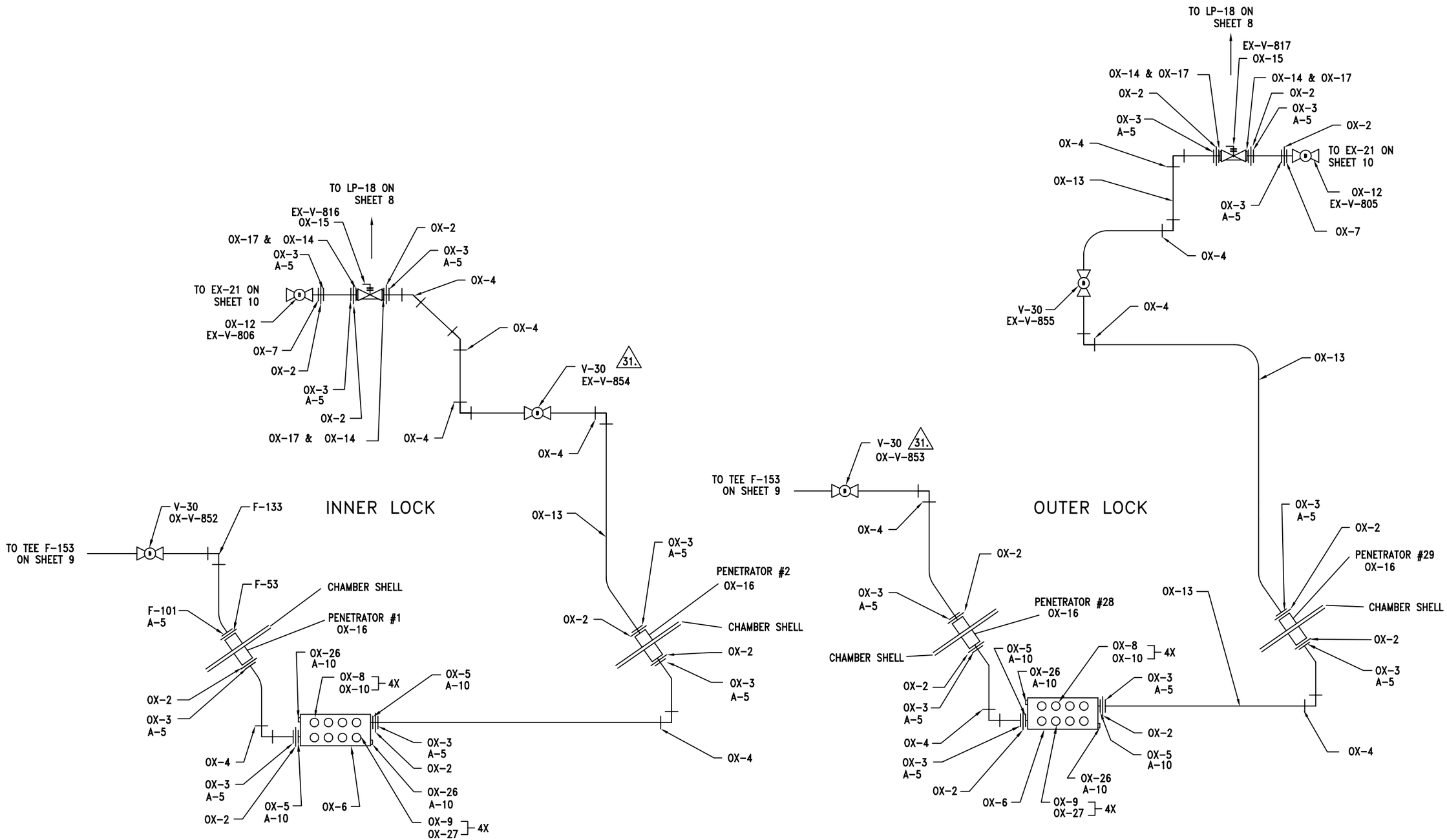

BIBS SUPPLY AND EXHAUST SYSTEM

PARTS LIST ON SHEETS 2 AND 4

THIS DRAWING HAS BEEN COMPUTER GENERATED USING CAD. DO NOT MAKE MANUAL CHANGES.	SIZE	CAGE CODE		DWG NO.	REV
	D	53711	592	7371361	B
	SCALE UNLESS NOTED	NONE		SHEET 6 OF 24	

10/13/2011 10:26:01 AM