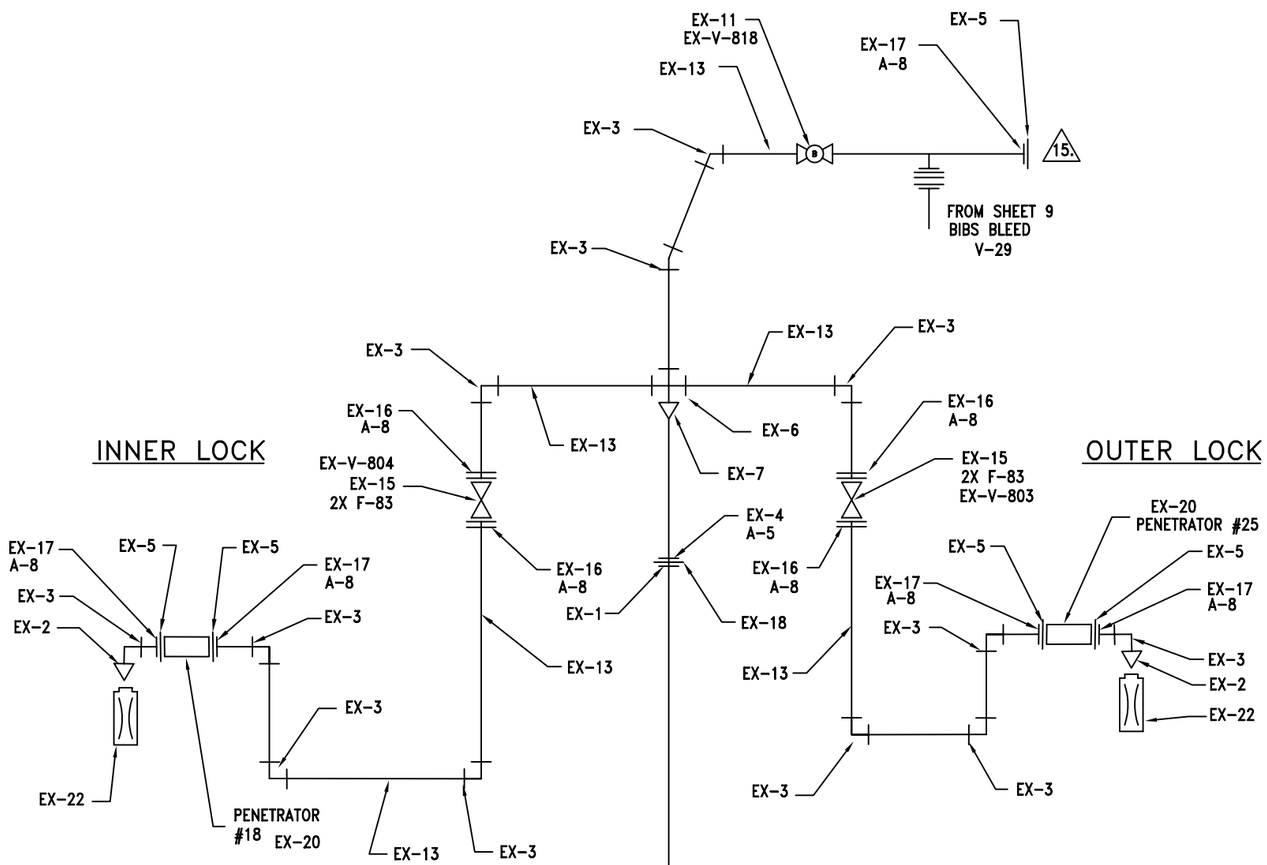

EXHAUST SYSTEM PIPING

PARTS LIST ON SHEETS 2 AND 4

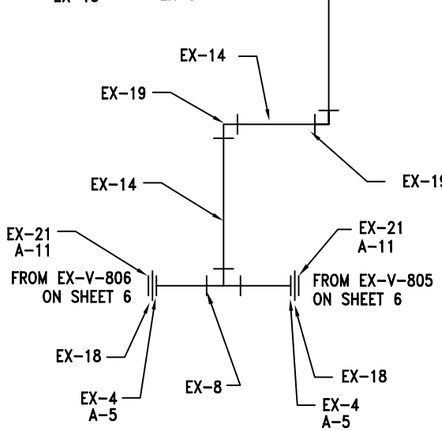

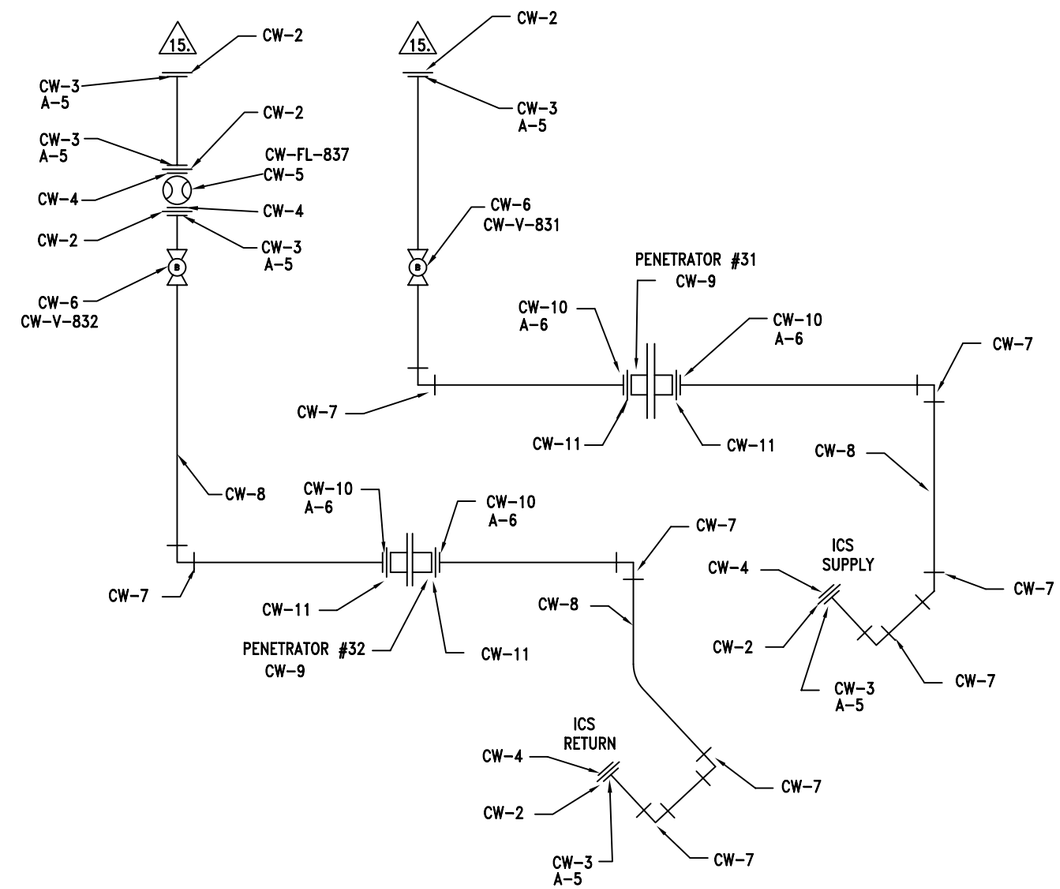

CHILL WATER SUPPLY & RETURN

PARTS LIST ON SHEET 2

THIS DRAWING HAS BEEN COMPUTER GENERATED USING CAD. DO NOT MAKE MANUAL CHANGES.	SIZE	CAGE CODE		DWG NO.	REV
	D	53711	592	7371361	B
	SCALE UNLESS NOTED	NONE		SHEET 10 OF 24	

10/13/2011 10:24:11 AM