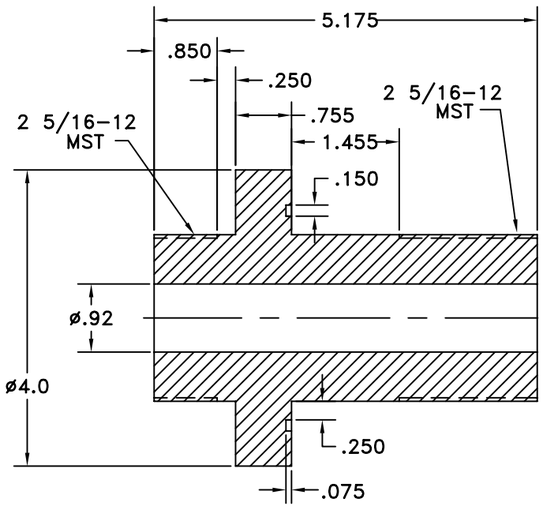


SECTION "A"

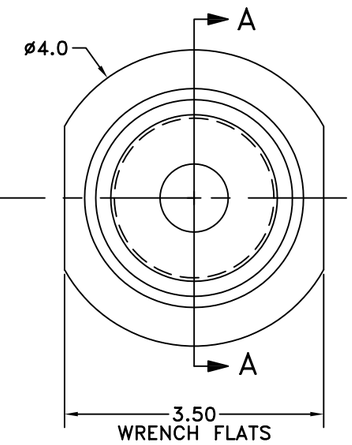


1" HOLLOW BOLT

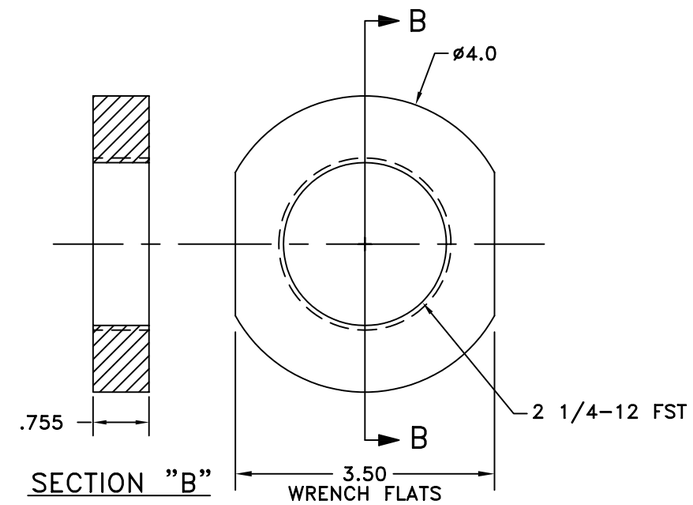


SECTION "B"

1" NUT

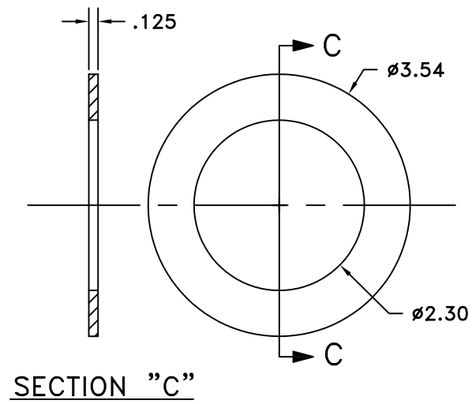


SECTION "C"

1" WASHER

1" HOLLOW BOLT

DETAIL "C-5"

CW-9, LP-49

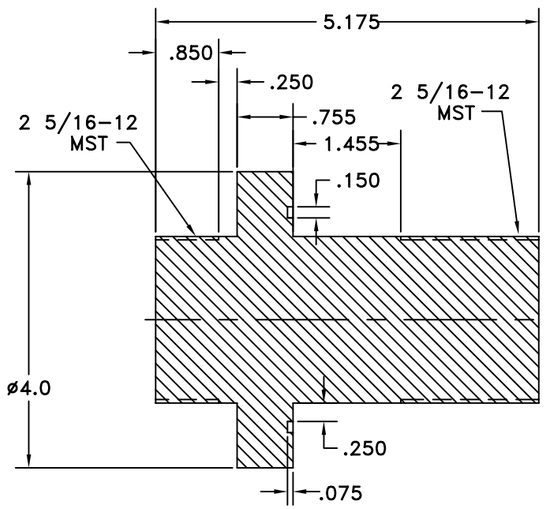


SECTION "A"

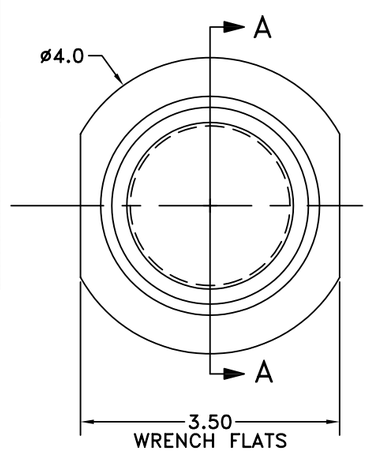


1" PENETRATOR BLANK

DETAIL "C-6"

LP-36

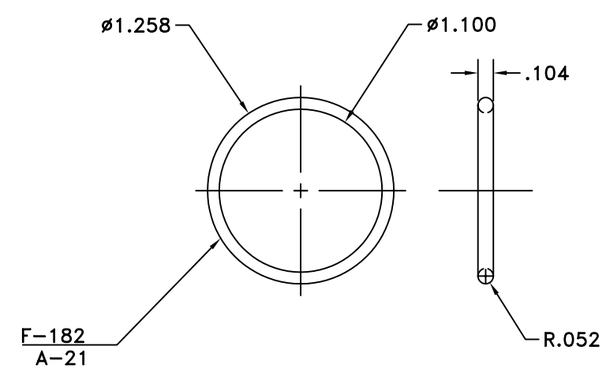


31. V-30 BODY SEAL 2X

SCALE: 2:1

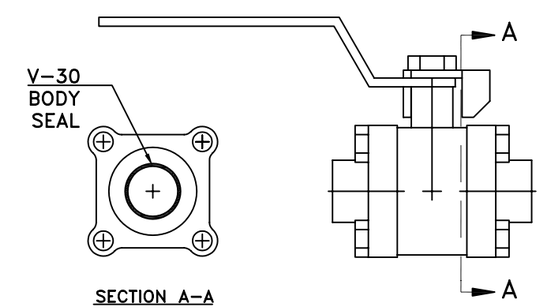


SECTION A-A

V-30 VALVE, BALL

| THIS DRAWING HAS BEEN COMPUTER GENERATED USING CAD. DO NOT MAKE MANUAL CHANGES. | SIZE | CAGE CODE | | DWG NO. | REV |
|---|---|---|---|---|---|
| | D | 53711 | 592 | 7371361 | B |
| | SCALE UNLESS NOTED | NONE | | SHEET 16 OF 24 | |

10/13/2011 10:22:08 AM