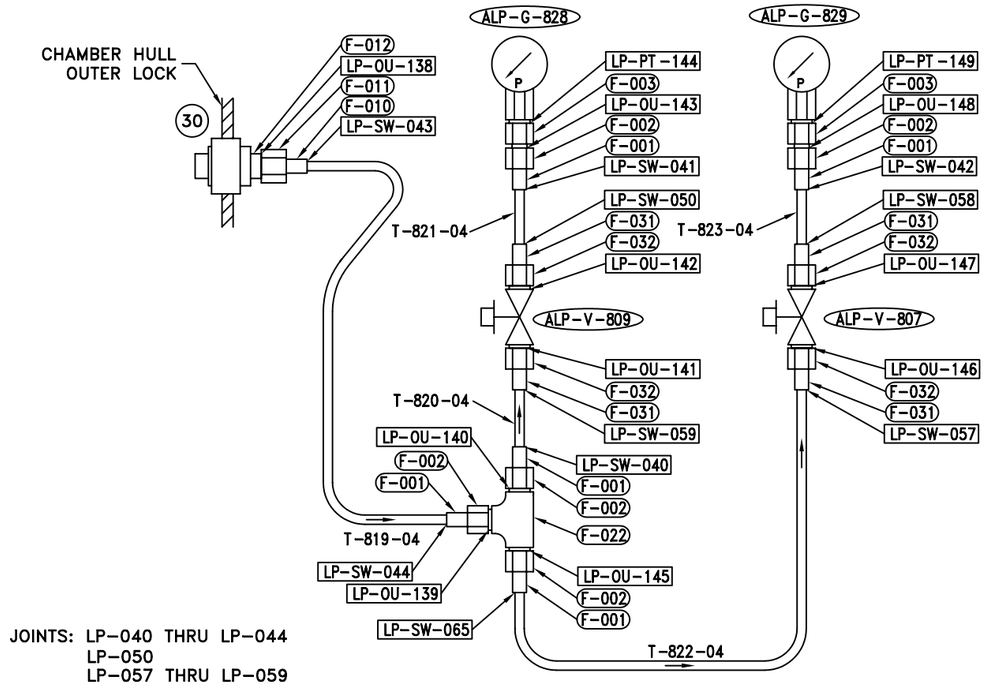


JOINTS: LP-040 THRU LP-044
LP-050
LP-057 THRU LP-059
LP-065
LP-138 THRU LP-149

OUTER LOCK FSW SUPPLY

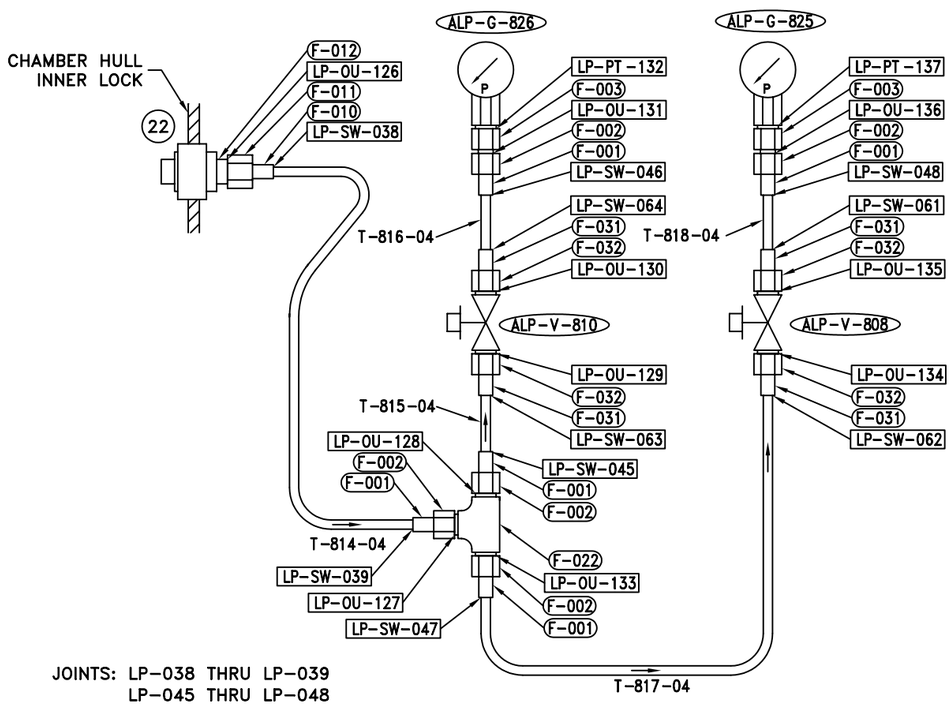


JOINTS: LP-038 THRU LP-039
LP-045 THRU LP-048
LP-061 THRU LP-064
LP-126 THRU LP-137

INNER LOCK FSW SUPPLY

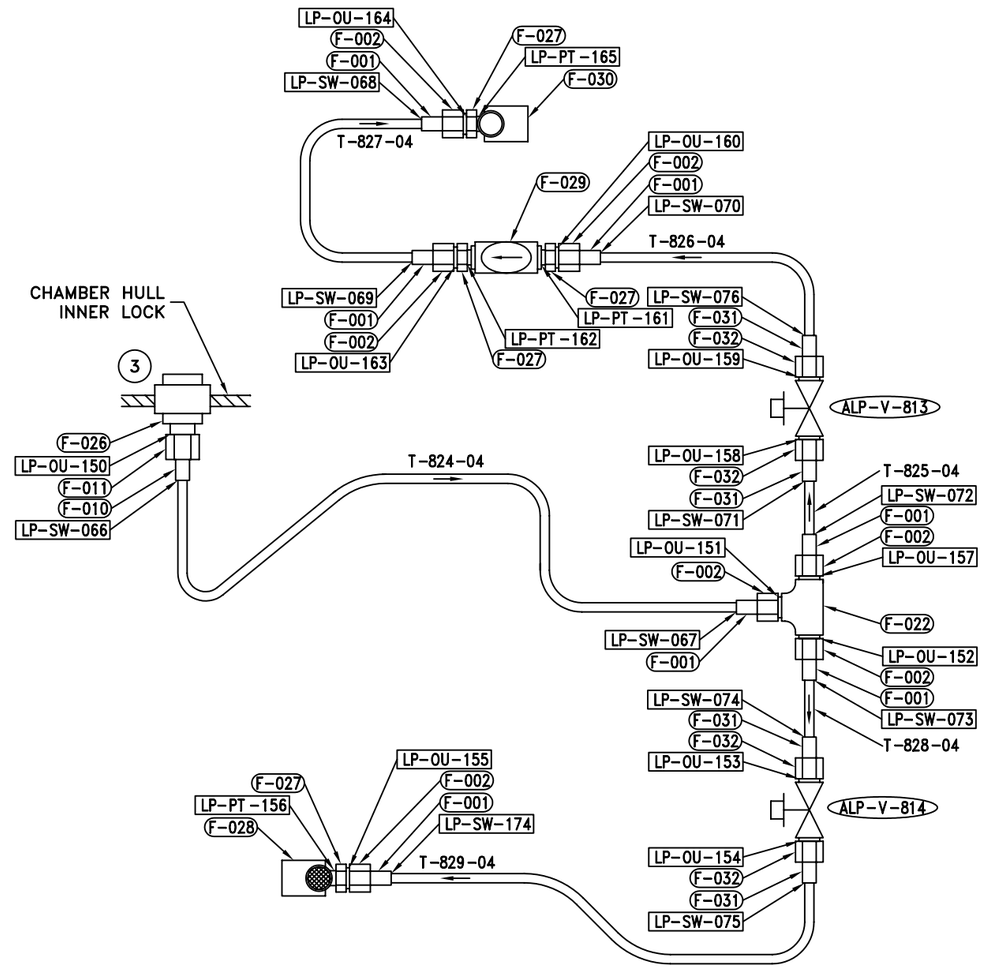


OXYGEN MONITOR AND CARBON DIOXIDE MONITOR LINES

JOINTS: LP-066 THRU LP-076
LP-150 THRU LP-165
LP-174

| THIS DRAWING HAS BEEN COMPUTER GENERATED USING CAD. DO NOT MAKE MANUAL CHANGES. | SIZE | CAGE CODE | | DWG NO. | REV |
|---|---|---|---|---|---|
| | D | 53711 | 592 | 7371363 | A |
| | SCALE UNLESS NOTED | NONE | | SHEET 5 OF 11 | |

10/13/2011 1:06:19 PM