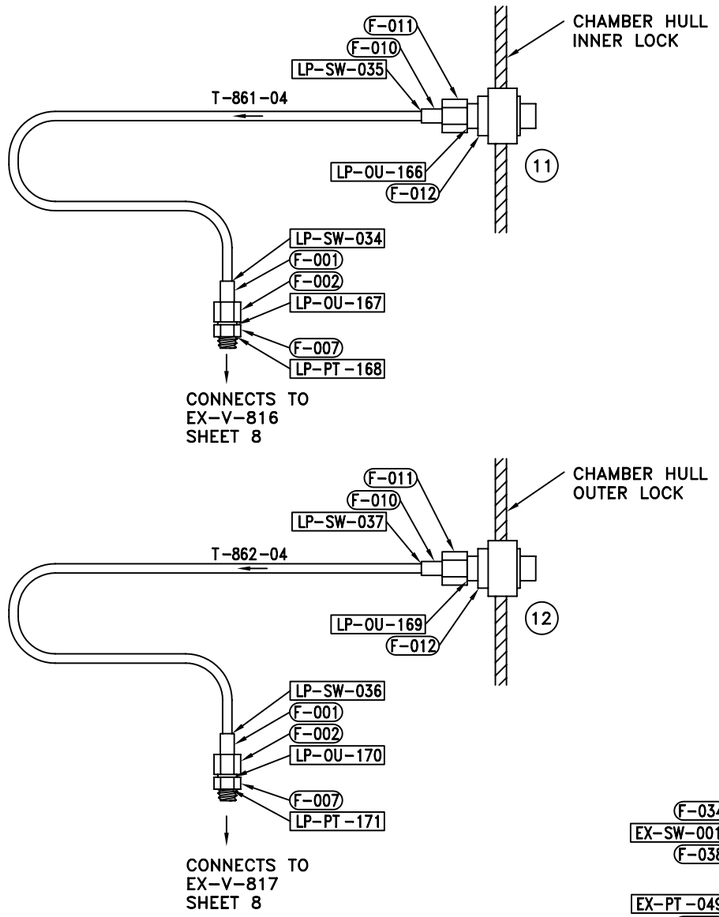

BACK PRESSURE REGULATOR REFERENCE LINES

JOINTS: LP-034 THRU LP-037
LP-166 THRU LP-171

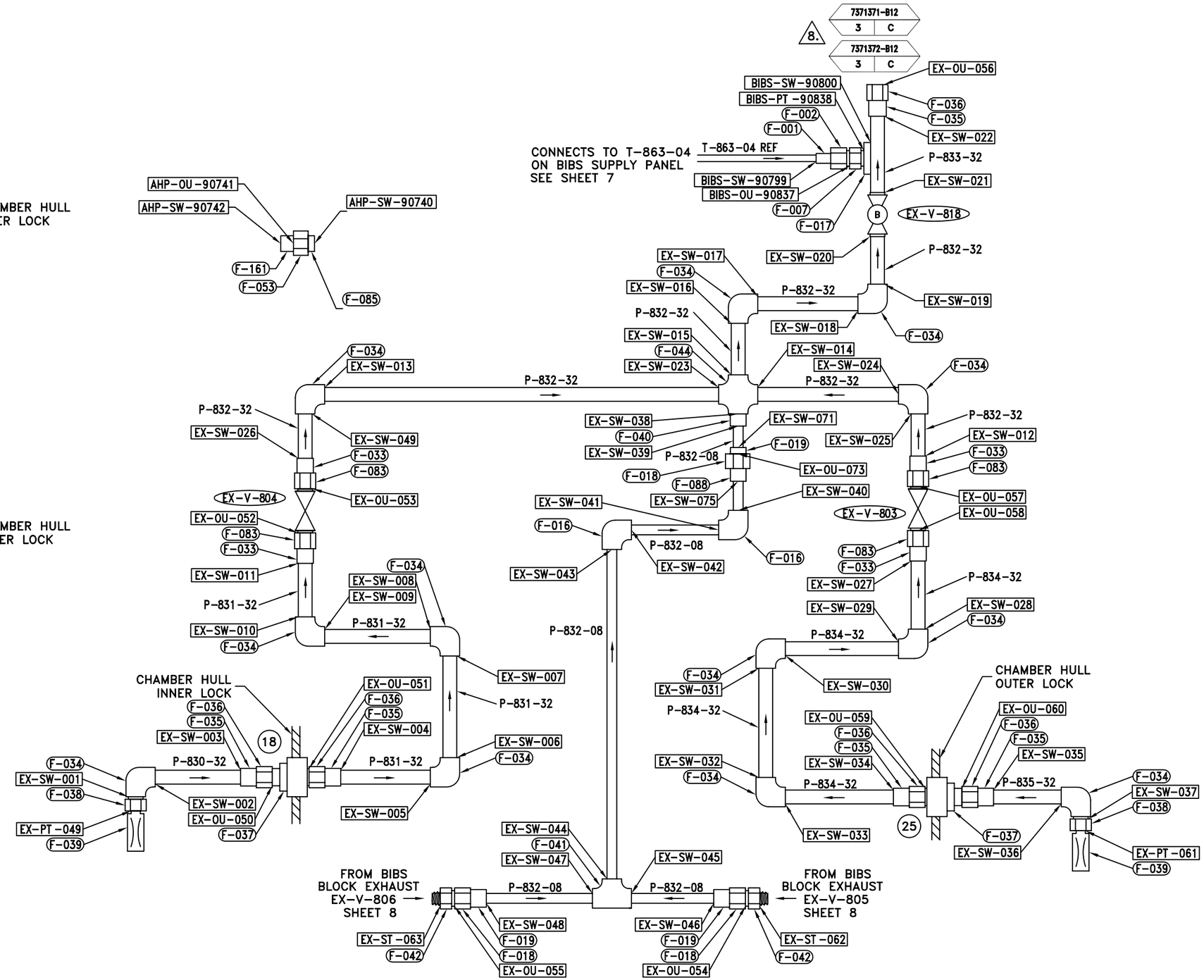

EXHAUST SYSTEM PIPING

JOINTS: EX-001 THRU EX-063
EX-071, EX-073, EX-075
90799 THRU 90800
90837, 90838

THIS DRAWING HAS BEEN COMPUTER GENERATED USING CAD. DO NOT MAKE MANUAL CHANGES.	SIZE	CAGE CODE		DWG NO.	REV
	D	53711	592	7371363	C
	SCALE UNLESS NOTED	NONE		SHEET 6 OF 11	

10/13/2011 12:54:04 PM