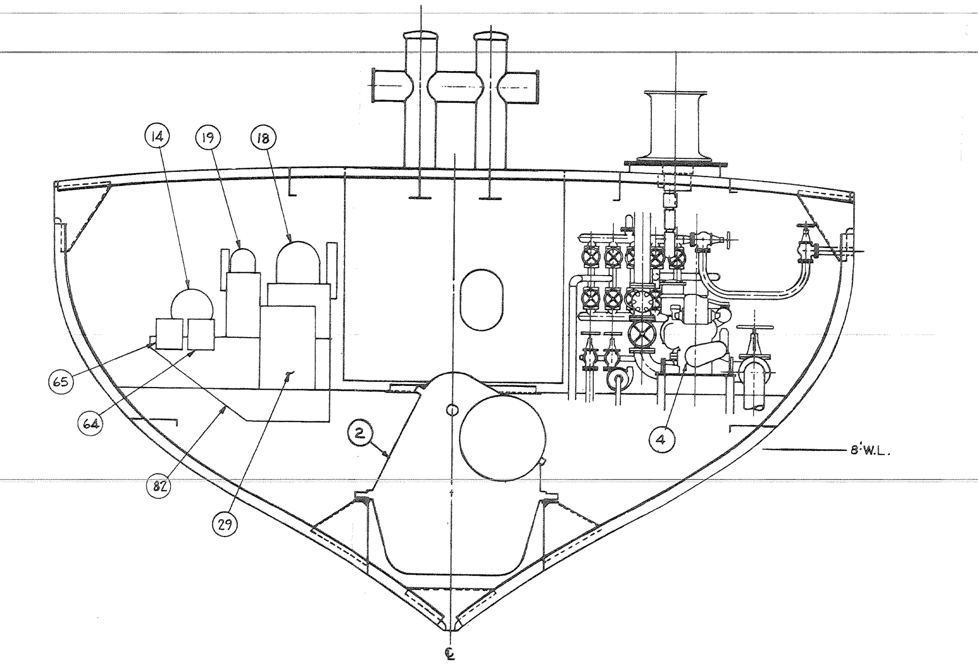

FR 37 LKG AFT

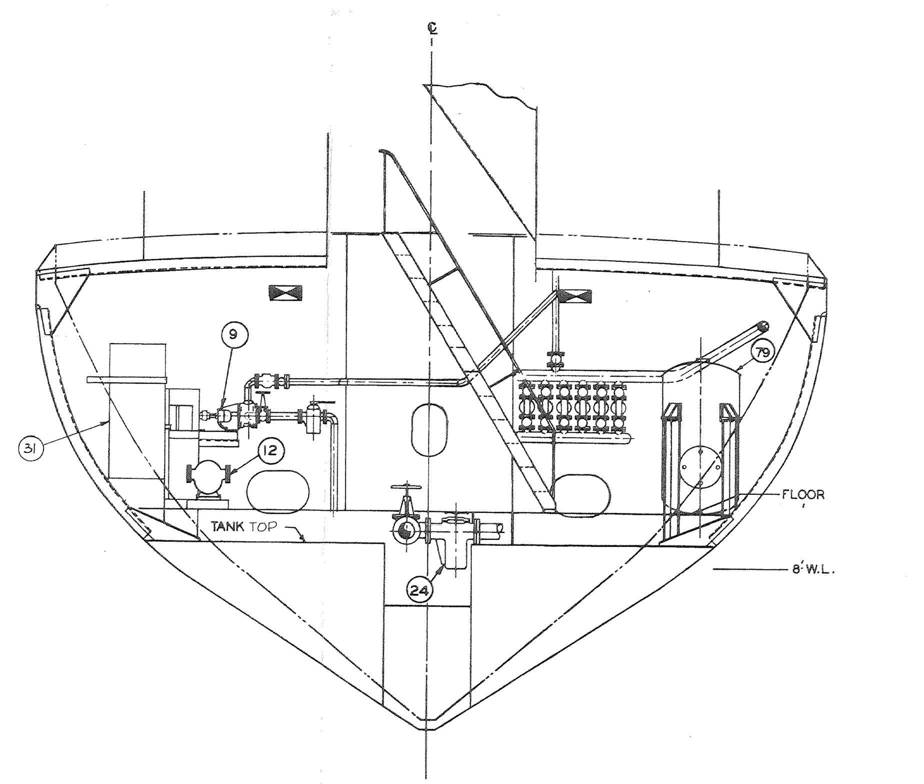

FR 27 LKG FWD

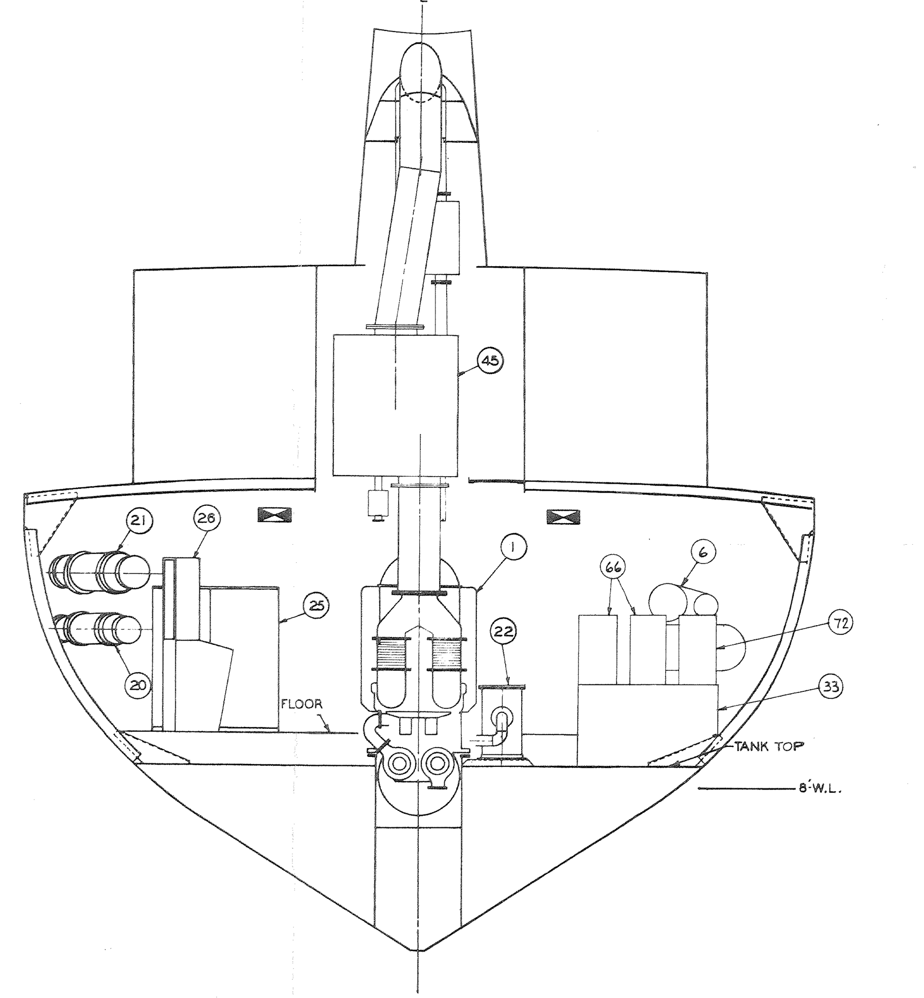

FR 27 LKG AFT

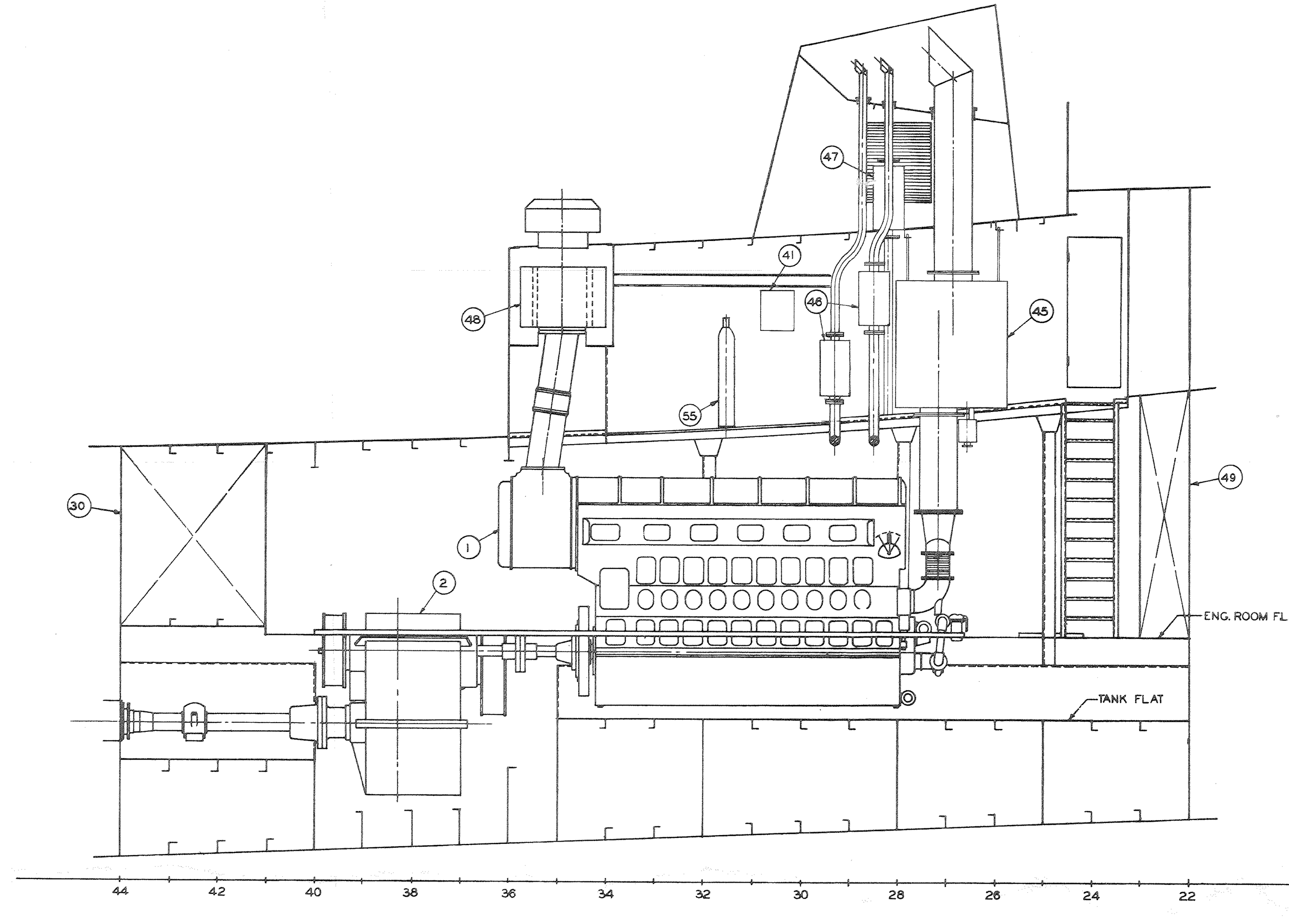

ELEVATION

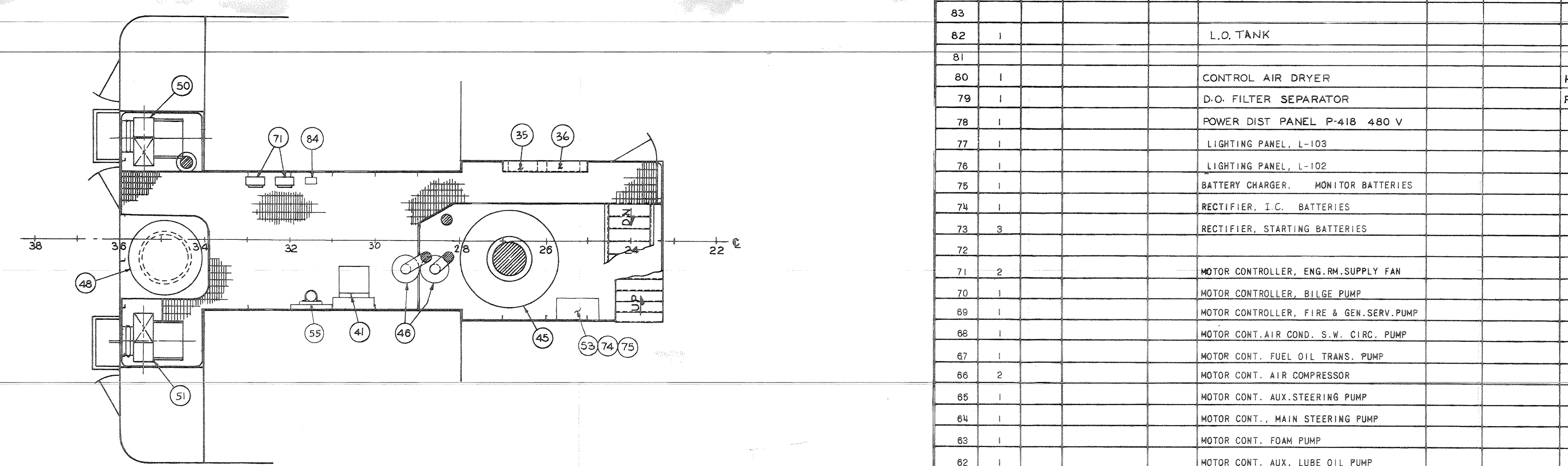

PLAN - MAIN DECK

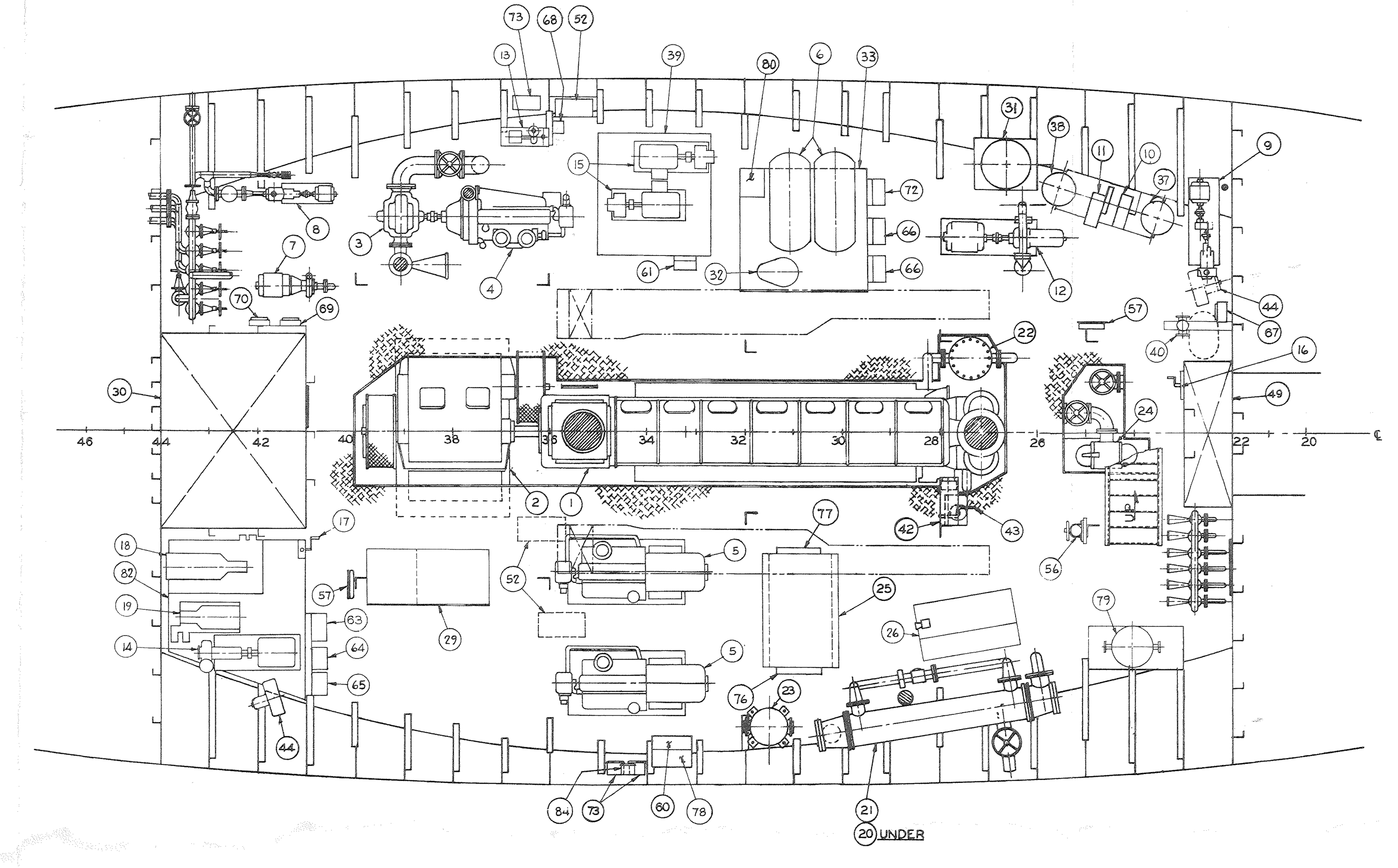

PLAN - ENGINE FLOOR LEVEL

245-4442397

ITEM NO.	QTY. REQ.	CODE IDENT.	PART NO.	SYMBOL	DESCRIPTION	MAT'L	SPEC. NO.	REMARKS	GR NO.	UNIT WT. LBS
85	1				CONTROL AIR MANIFOLD					
84	2				TRANSFORMER 3KVA			WESTINGHOUSE		
83										
82	1				L.O. TANK					
81										
80	1				CONTROL AIR DRYER			HANKISON # E-20		
79	1				D.O. FILTER SEPARATOR			FRAM # VFCS-458-6N11		
78	1				POWER DIST PANEL P-418 480 V					
77	1				LIGHTING PANEL, L-103					
76	1				LIGHTING PANEL, L-102			KINNEY # 244091		
75	1				BATTERY CHARGER, MONITOR BATTERIES			LA MARCHE		
74	1				RECTIFIER, I.C. BATTERIES			LA MARCHE		
73	3				RECTIFIER, STARTING BATTERIES			LA MARCHE		
72										
71	2				MOTOR CONTROLLER, ENG.RM.SUPPLY FAN					
70	1				MOTOR CONTROLLER, BILGE PUMP					
69	1				MOTOR CONTROLLER, FIRE & GEN.SERV.PUMP					
68	1				MOTOR CONT.AIR COND. S.W. CIRC. PUMP					
67	1				MOTOR CONT. FUEL OIL TRANS. PUMP					
66	2				MOTOR CONT. AIR COMPRESSOR					
65	1				MOTOR CONT. AUX.STEERING PUMP					
64	1				MOTOR CONT., MAIN STEERING PUMP					
63	1				MOTOR CONT. FOAM PUMP					
62	1				MOTOR CONT. AUX. LUBE OIL PUMP					
61	2				MOTOR CONT. HYDRAULIC PUMP			ALLEN-BRADLEY		
60	1				TRANSFORMER - 15 KVA			WESTINGHOUSE		
59										
58										
57	2				FIRE HOSE STATION					
56	1				FIXED CO_2 HOSE RACK SYS. 50 FT. HOSE			50# CYLINDER		
55	1				FIXED CO_2 SYS. ENG.EXHAUST & AIR INTAKE			50# CYLINDER		
54										
53	4				MONITOR & I.C. BATTERIES			GRANT BATTERY SALES		
52	3				STARTING BATTERIES			GRANT BATTERY SALES		
51	1				ENG.RM.SUPPLY FAN			AMERICAN STD # 1055A 985 CWDBD		
50	1				ENG.RM.SUPPLY FAN			AMERICAN STD # 1055A 984 CCWDBD		
49	1				D.O. SERVICE TANK					
48	1				AIR INTAKE FILTER, MAIN ENG.			AIR-MAZE MODEL 30MS		
47	1				EXHAUST SILENCER, FIRE PUMP ENG.			MAXIM MODEL 5" MSAI		
46	2				EXHAUST SILENCER, GENERATOR ENG.			MAXIM MODEL 4" MSAI		
45	1				EXHAUST SILENCER, MAIN ENG.			MAXIM MODEL 18" SCF		
44	2				UNIT HEATER			CHROMALOX # LUH-10-15		
43	1				MAIN ENG. CONTROL LEVER			WESTINGHOUSE AIR BRAKE		
42	1				MAIN ENG. GAUGEBOARD			FAIRBANKS MORSE GL16798A1		
41	1				JACKET WATER EXPANSION TANK					
40	1				F.O. STRAINER			TATE TEMCO # CD-15F-125		
39	1				HYDRAULIC OIL TANK					
38	1				FRESH WATER PRESSURE TK. 18"Dx48" 42 GAL			DEMING		
37	1				SANITARY WATER PRESS.TK. 18"Dx48" 42 GAL			DEMING		
36	1				LIGHTING PANEL L-101					
35	1				VENT PANEL P-405			KINNEY # 244091		
34										
33	1				SEWAGE TANK					
32	1				SEWAGE PUMP			WEIL PUMP CO. # A-13555		
31	1				WATER HEATER 82 GAL.			CRANE SUPPLY MODEL CS-82-DE-5		
30	1				F.W. STORAGE TANK					
29	1				WORKBENCH					
28	1				TELEPHONE HOOD					
27	1				LOG DESK, 28"WIDEx30" LG.					
26	1				MONITOR CONTROL CONSOLE			SPERRY		

PARTS LIST

NO	TITLE	DRAWING NUMBER MMC	DRAWING NUMBER NAVSHIPS
1			
2			
3			
4			
5			

REFERENCES

GENERAL NOTES

ZONE	LTR	DESCRIPTION	DATE CONTR	DATE USN	APPD. CONTR	APPD. USN
		THIS PLAN WAS DEVELOPED FROM NAVSHIPS DRAWING NO. 245-4382643				

REVISIONS

ITEM NO.	QTY. REQ.	CODE IDENT.	PART NO.	SYMBOL	DESCRIPTION	MAT'L	SPEC. NO.	REMARKS	GR NO.	UNIT WT. LBS
25	1				SWITCHBOARD 450V			ELECTROL SPECIALTIES CO.		
24	1				JACKET WATER STRAINER, 6" DUPLEX			TATE TEMCO # TCD-15F-150		
23	1				LUBE OIL FILTER FULL FLOW			NUGENT & CO. # 1577-208B-5N-GH		
22	1				LUBE OIL STRAINER, 30 GALLON CAP			AIR-MAZE PART 07W801022		
21	1				LUBE OIL COOLER			AMERICAN STANDARD MODEL 1508 CPR-W		
20	1				JACKET WATER COOLER			AMERICAN STANDARD MODEL 1306 CPR-W		
19	1				STEERING AUX.HYD.POWER UNIT			SPERRY # 230-6354		
18	1				STEERING MAIN HYD. POWER UNIT			SPERRY # 230-6354-22		
17	1				LUBE OIL HAND PUMP			BLACKMER NO. WH-414		
16	1				FUEL OIL HAND PUMP			BLACKMER NO. WH-414		
15	2				HYDRAULIC OIL PUMP			HYRECO # 36PL240003 FURN. BY NEW ENG. TRAW.		
14	1				FOAM PUMP 66 GPM OF LIQUID FOAM			WORTHINGTON SIZE 1-1/2 CNE-82		
13	1				AIR COND.SALT WATER CIRC. PUMP 48 GPM AT 97FT			BELL & GOSSETT CO MODEL 1531		
12	1				AUX. LUBE OIL PUMP, 200 GPM.			ROPER FIG. F-200, TYPE 27		
11	1				FRESH WATER PUMP			DEMING FIG.2895, SIZE 1		
10	1				SANITARY WATER PUMP			DEMING FIG.2895, SIZE 1		
9	1				FUEL OIL TRANSFER PUMP, 90 GPM AT 25 PSI			DEMING FIG.1537, SIZE 2-1/2 H		
8	1				BILGE & BALLAST PUMP, 100 GPM AT 25 PSI			DEMING FIG.3001, SIZE 1-1/2 C		
7	1				GENERAL SERVICE PUMP			DEMING FIG.4211, SIZE 1-1/2 S, UNIT H-17-T		
6	2				AIR COMPRESSOR			QUINCY MODEL F310-60		
5	2				GENERATOR SET, 60 KW, 450 VOLT 3 PH. 60 CYCLE			DETROIT DIESEL # I-5259		
4	1				FIRE PUMP DIESEL ENGINE			DETROIT DIESEL # 1064-7002		
3	1				FIRE PUMP, 2000 GPM, AT 125 PSI			DEMING FIG.5063, SIZE 8x6x17		
2	1				REVERSE-REDUCTION GEAR, 149 RPM AHEAD 159 RPM ASTERN			WESTERN GEAR MODEL 157 PCMR-S		
1	1				MN.PROPULSION ENG. 2000 HP AT 850 RPM			FAIRBANKS-MORSE 10 CYL.MODEL 38D-8-1/8x10		

PARTS LIST

WEIGHT & CENTER OF GRAVITY BLOCK

WEIGHT GROUP	WEIGHT LBS.	VCG ABOVE BL FT.	L.C.G. FWD OF ⊠ FT.	L.C.G. AFT OF ⊠ FT.	TRANSV. C.G. PORT FT.	TRANSV. C.G. STBD FT.

CONTR. NO C-0216
MARINETTE MARINE CORP.
MARINETTE WISCONSIN

CONTRACTOR DWG. NO. 071

	BY	DATE
DRAWN	T.B.	5-10-72
CHECKED	L.H.	5-10-72
APPROVED	[illegible]	5-10-72

DEPARTMENT OF THE NAVY
NAVAL SHIPS SYSTEM COMMAND
WASHINGTON, D.C.

109 FT HARBOR TUG - LARGE - YTB
YTB 760 CLASS-816 SERIES

MACHINERY ARRANGEMENT AND SECTIONS

SIZE	CODE I.D. NO.	NAVSHIPS DRAWING NO.	REV.
H	80064	245-4442397	

SCALE: 3/8"=12" SHEET 1 OF 1

245-4442397

SHT 21 OF 22

PLAN DISTRIBUTION
REVISION
NAVY
ABS
LOFT
ELEC
FOREMAN
PIPE
PLATE
SHT MTL.
PREFAB
ERECT'N
MACH
INSPECT'N
RAS

24 SQ. FT.

MACHINERY ARR & SECTIONS

YTB 809 245-4442397

071