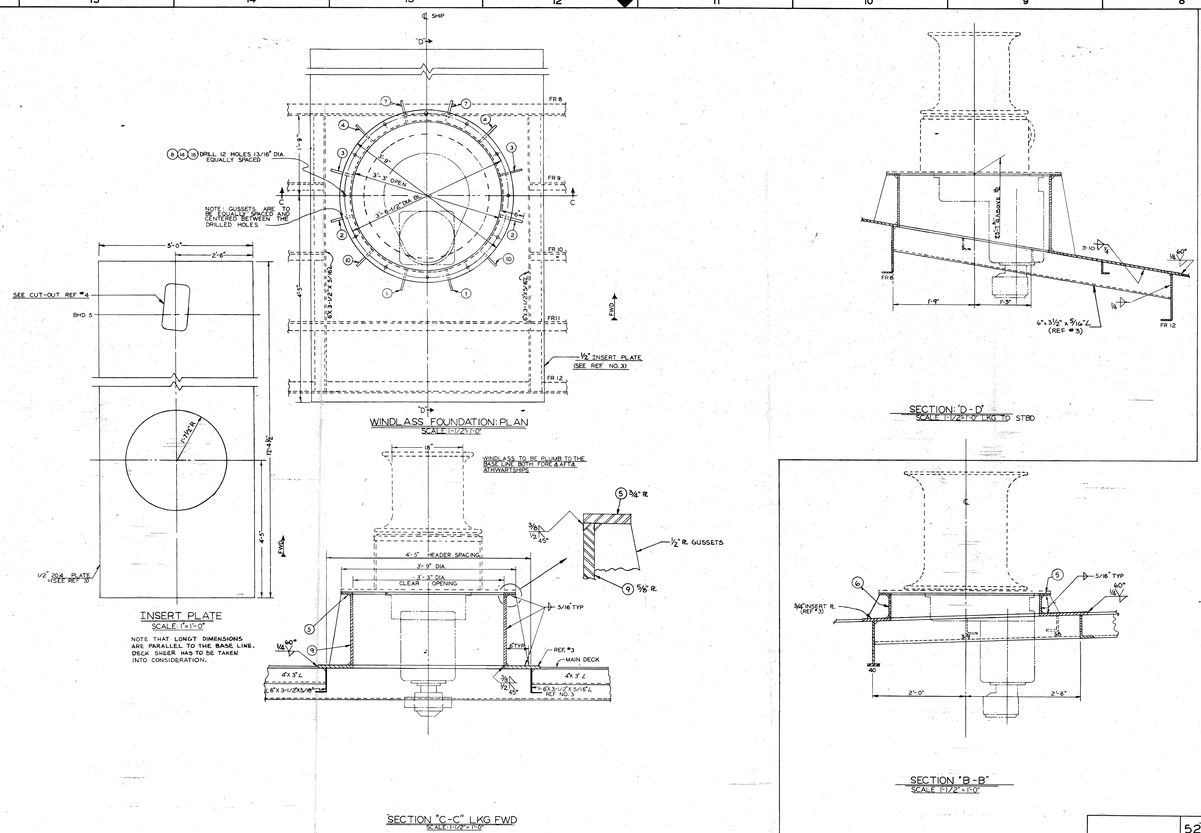

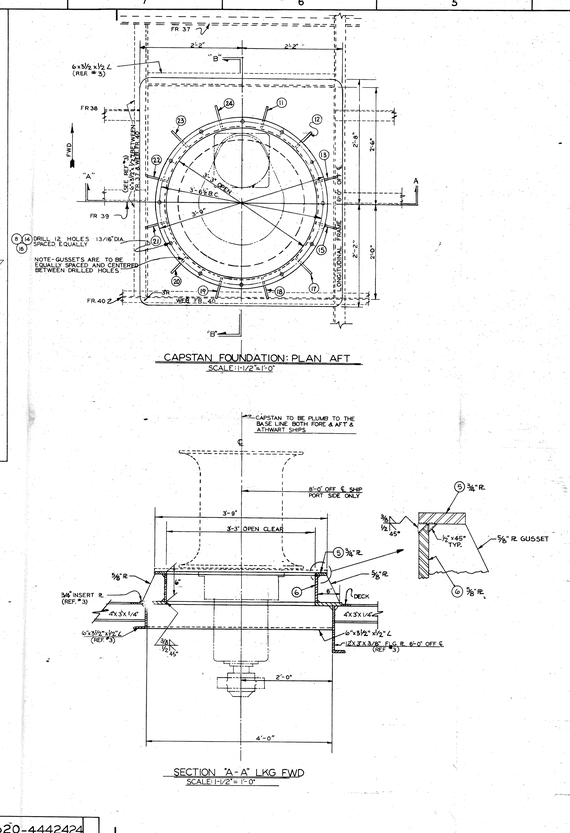

REFERENCES

NO	TITLE	DRAWING NUMBER NNS	DRAWING NUMBER NAVSHIPS
1	TRANSVERSE FRAMING - FR.24 FWD.	003	101-4442365
2	LONG'L. BHDS.	013	114-4442379
3	MAIN DECK PLATING & BEAMS	005	107-4442371
4	ANCHOR HANDLING & STOWAGE ARRG'T.	065	520-4442426
5	TRANSVERSE FRAMING - AFT. FR.24	003A	101-4442367

REVISIONS

ZONE	LTR	DESCRIPTION	DATE	APPD.
		THIS DRAWING DEVELOPED FROM NAVSHIPS DRAWING NO 520-4382670	1-3-74	1-3-74

GENERAL NOTES

ALL WELDING TO BE IN ACCORDANCE WITH CURRENT ABS RULES.

PARTS LIST

ITEM NO	QTY REQ	CODE IDENT	PART NO.	SYMBOL	DESCRIPTION	MAT'L	SPEC NO.	REMARKS	GR	UNIT NO. WT LBS
24	1									
23	1									
22	1									
21	1									
20	1									
19	1									
18	1									
17	1				PLATE 5/8"	STEEL	ABS RULES			
16	24				REGULAR SPRING LOCK WASHER 3/4" NOMINAL	GALV. STL.				
15					PLATE 5/8"	STEEL	ABS RULES			
14	24				HEX. NUT 3/4" - 10NC REG	GALV. STL.				
13	1				PLATE 5/8"	STEEL	ABS RULES			
12	1				PLATE 5/8"	STEEL	ABS RULES			
11	1				PLATE 5/8"	STEEL	ABS RULES			
10	2				PLATE 1/2"	STEEL	ABS RULES			
9	1				PLATE 5/8"	STEEL	ABS RULES			
8	24				BOLT HEX. HD. 3/4" DIA. 10NC-2-3/4" LG.	GALV. STL.				
7	2				PLATE 1/2"	STEEL	ABS RULES			
6	1				PLATE 5/8"	STEEL	ABS RULES			
5	1				PLATE 3/4"	STEEL	ABS RULES			
4	2				PLATE 1/2"	STEEL	ABS RULES			
3	2				PLATE 1/2"	STEEL	ABS RULES			
2	2				PLATE 1/2"	STEEL	ABS RULES			
1	2				PLATE 1/2"	STEEL	ABS RULES			

WEIGHT & CENTER OF GRAVITY BLOCK

WEIGHT GROUP	WEIGHT LBS.	VCG ABOVE BL	LCG FR OF AP	TCG AFT OF ℄	TCG PORT OF ℄	TCG STBD OF ℄
113	980	21.55	13.46	—	2.98	—

CONTR NO C-0216
MARINETTE MARINE CORP.
MARINETTE, WISCONSIN

CONTRACTOR DWG NO.
012
REV DATE

DRAWN	D.M.	1-3-74
CHECKED	R.A.P.	1-3-74
APPROVED	W.A.S.	1-3-74

DEPARTMENT OF THE NAVY
NAVAL SHIPS SYSTEM COMMAND
WASHINGTON, D.C.

109 FT. HARBOR TUG-LARGE YTB
FTB 180 (YTB 824 & SUBSEQ.)
WINDLASS & CAPSTAN FOUNDATION

SIZE H | CODE IDENT NO. 90064 | NAVSHIPS DRAWING NO. 520-4442424 | REV.

SCALE 1/2 SHOWN | SHEET 1 OF 1

520-4442424

PLAN DISTRIBUTION			
DIVISION	✓		
SAFY	✓		
ABS	✓		
LOFT	✓		
ELEC	✓		
FOREMAN	✓		
PIPE			
PLATE			
SHT. MTL.			
PREFAB			
CRDTN			
MACH			
INSPECTN			
B.A.S.			

012