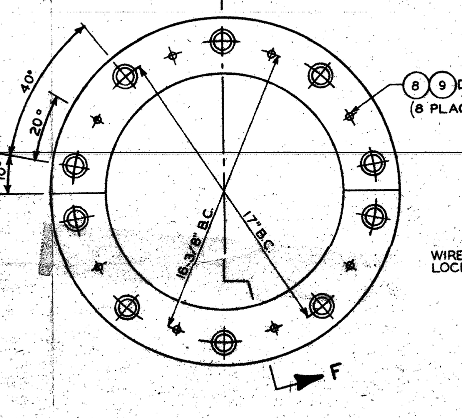

DETAIL 17-F
DEMOUNTABLE HEAD ASSY.
SCALE: 3" = 1'-0"
(REF 2)

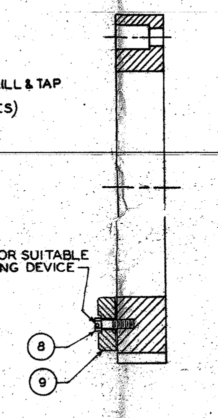

SECTION 16-F
SCALE: 3" = 1'-0"

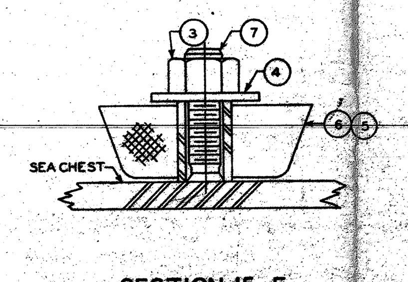

SECTION 15-F
ANODE TYPE ZEP-STYLE B
SCALE: FULL

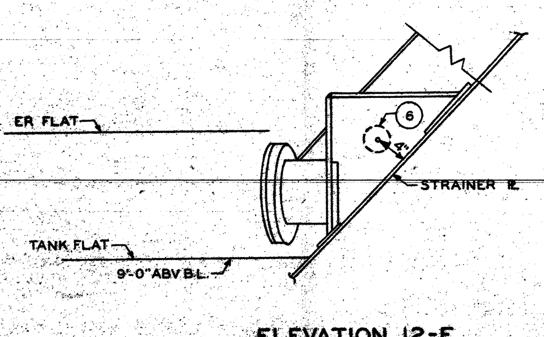

ELEVATION 12-F
HIGH SEA CHEST
STBD SIDE, FR 25 LKG. FWD.
SCALE: 1-1/2" = 1'-0"

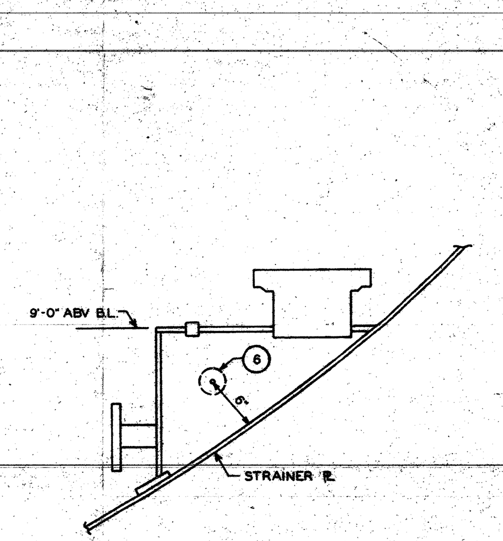

ELEVATION 11-F
FIRE GEN'L SER. & BALLAST SEA CHEST
PORT SIDE, FR 37 LKG AFT
SCALE: 1-1/2" = 1'-0"

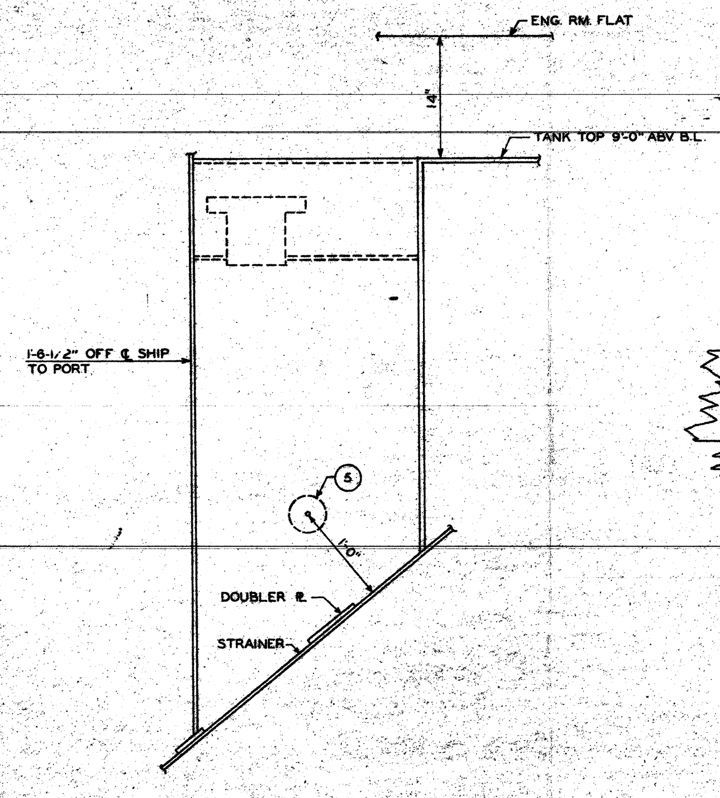

ELEVATION 8-F
LOW SEA CHEST
FR 24 LKG AFT
SCALE: 1-1/2" = 1'-0"

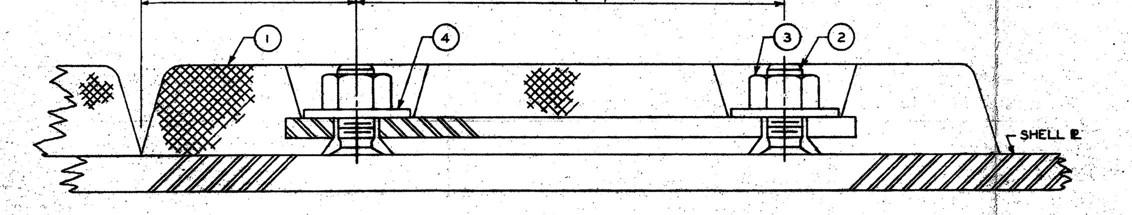

SECTION 6-G
ZINC HULL SLAB / CORE STRAP
SCALE: FULL

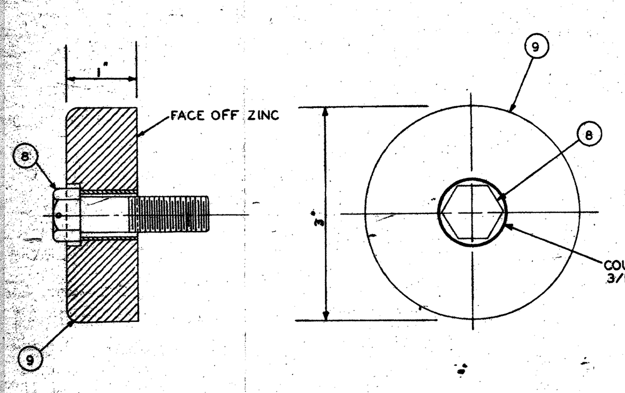

DETAIL 17-C
ZINC FOR DEMOUNTABLE HEAD
(8 REQ'D.)
SCALE: FULL

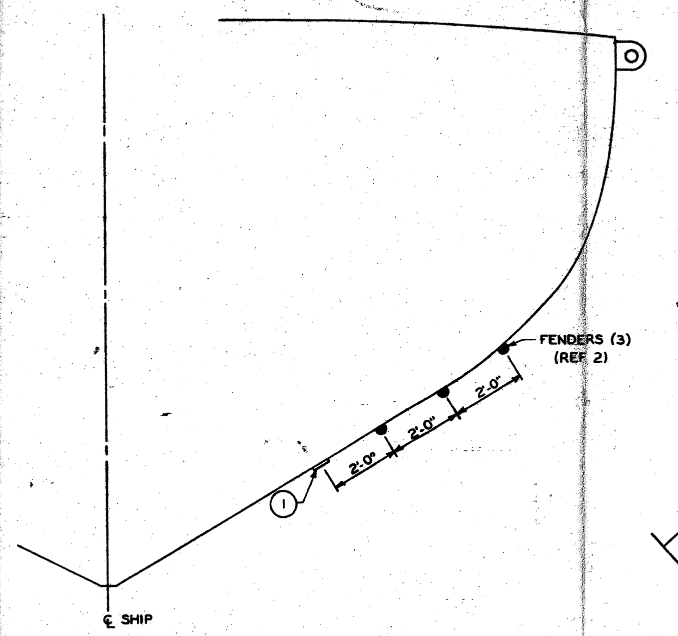

ELEVATION 15-C
FR 31 LKG AFT
SCALE: 1/2" = 1'-0"

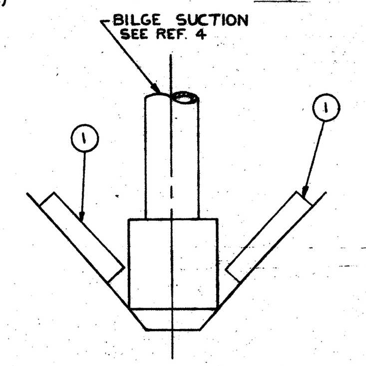

SECTION 14-A
6" FWD FR. 40 - LKG AFT
SCALE: 3" = 1'-0"

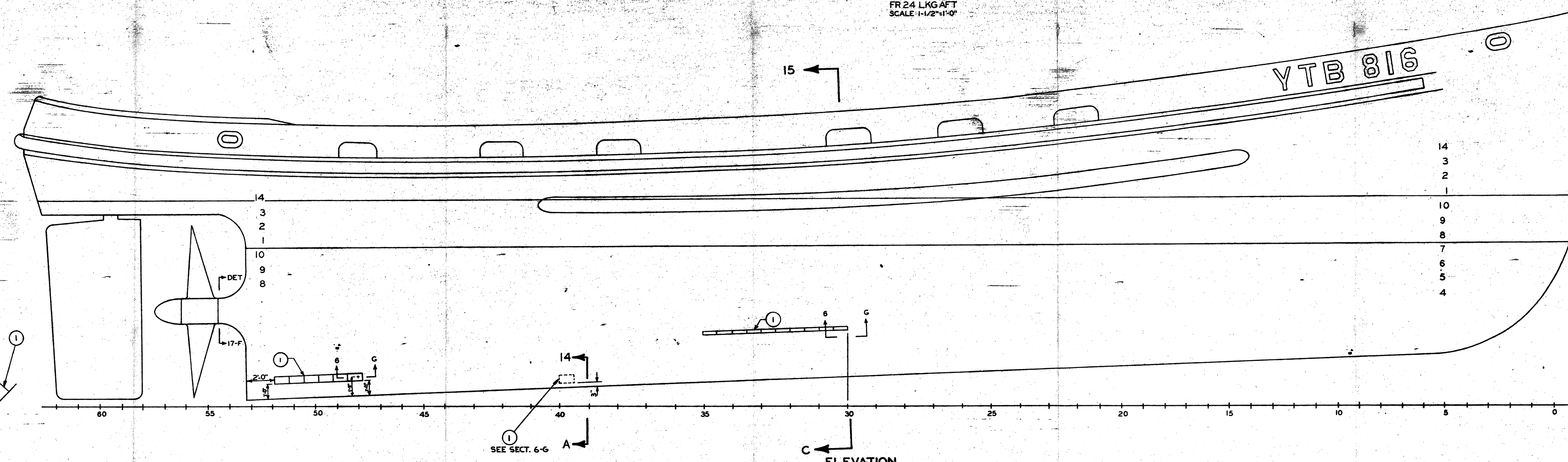

ELEVATION
SCALE: 3/8" = 1'-0"
STBD SHOWN-PORT SIM.

600-4442435

REFERENCES

NO	TITLE	DRAWING NUMBER MMC	DRAWING NUMBER NAVSHIPS
1.	SEACHEST DETAILS	016	120-4442381
2	STERN TUBE & STUFFING BOX	019	203-4442388
3	FENDERING- ARRGT & DET.	052	600-4442434
4	BILGE & BALLAST PIPING	042	508-4442415
5			

GENERAL NOTES

1. THE HULL SURFACE BENEATH EACH ANODE SHALL BE COATED WITH A COMPLETE ANTI-CORROSIVE SYSTEM AS SPECIFIED FOR THE HULL.

REVISIONS

ZONE	LTR	DESCRIPTION	DATE CONTR	DATE USN	APPD. CONTR	APPD. USN
		THIS DRAWING DEVELOPED FROM NAVSHIPS DRAWING NO 600-4382705				

PARTS LIST

ITEM NO.	QTY. REQ.	CODE IDENT.	PART NO.	SYMBOL	DESCRIPTION	MAT'L	SPEC. NO.	REMARKS	GR NO.	UNIT WT LBS
13										
12										
11										
10										
9	8				ANODE-1 THK 3 DIA. TYPE ZEP, CLASS 1 STYLE B	ZINC	MIL-A-18001	1/2" STD. PIPE CORE		
8	8				BOLT-HEX HD. 1/2" DIA. × 1-1/2" LG.	GALV. STL	↑			
7	3				WELDING STUD 1/2"-13NC-2 × 2" LG	GALV. STL	COM'L.			
6	2				↑ ↑ 3" DIA ↑ ↑	ZINC	MIL-A-18001	1/2" STD PIPE CORE		
5	1				ANODE-1" THK, 4" DIA-TYPE ZEP, CLASS 1 STYLE B	ZINC	MIL-A-18001	1/2" STD PIPE CORE		
4	71				LOCKWASHER 1/2"	GALV. STL	↑			
3	71				HEX NUT 1/2"-13NC-3	GALV. STL				
2	68				WELDING STUD 1/2"-13NC-3 × 1-1/4" LG	GALV. STL	COM'L.			
1	34				ZINC ANODE TYPE ZHC-23	ZINC	MIL-A-18001		600	23

WEIGHT & CENTER OF GRAVITY BLOCK

WEIGHT GROUP	WEIGHT LBS.	VCG ABOVE BL FT.	L.C.G. FWD OF ⊠ FT.	L.C.G. AFT OF ⊠ FT.	TRANSV. C.G. PORT FT.	TRANSV. C.G. STBD FT.
600	807	4.00	—	16.40	—	—

CONTR. NO. C-0216
MARINETTE MARINE CORP.
MARINETTE WISCONSIN

CONTRACTOR DWG. NO. 081

	BY	DATE
DRAWN	C.H.	7-9-71
CHECKED	D.M.	8-4-71
APPROVED	[illegible]	

DEPARTMENT OF THE NAVY
NAVAL SHIPS SYSTEM COMMAND
WASHINGTON, D.C.

109 FT HARBOR TUG-LARGE-YTB
YTB 760 CLASS-816 SERIES
CATHODIC PROTECTION

SIZE	CODE I.D. NO.	NAVSHIPS DRAWING NO.	REV.
H	80064	600-4442435	

SCALE: AS SHOWN SHEET 1 OF 1

SHT 7 OF 22

081

PLAN DISTRIBUTION

REVISION
NAVY
ABS
LOFT
ELEC
FOREMAN
PIPE
PLATE
SHT. MTL.
PREFAB
ERECT'N
MACH
INSPECT'N
RAS