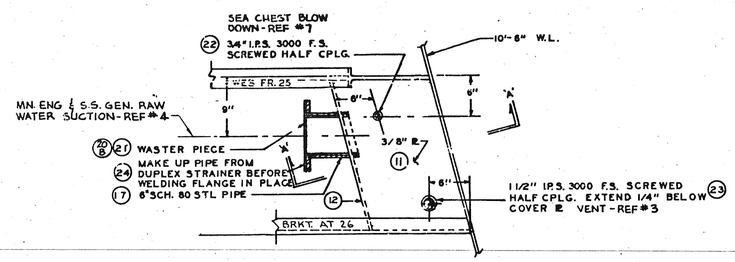

PLAN

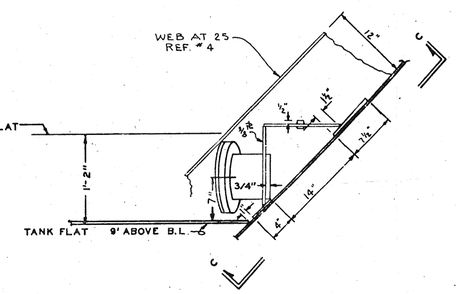

SECTION A-A

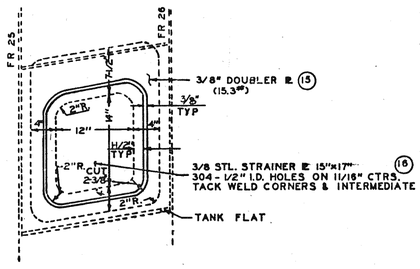

VIEW C-C
DOUBLER & STRAINER DETAIL

HIGH SEA CHEST
(STB'D)

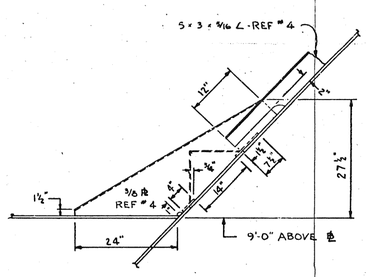

FR. 26 - LOOKING FWD.
STBD. SIDE

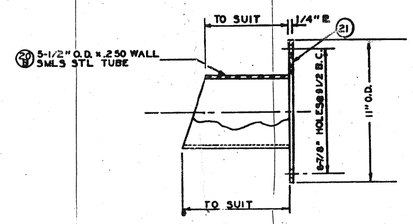

WASTER PIECE
(HIGH SEA CHEST)
SCALE: 3" = 1'-0"

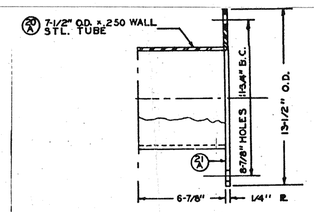

WASTER PIECE
(FIRE, GEN'L, SER & BALLAST SEA CHEST)
SCALE: 3" = 1'-0"

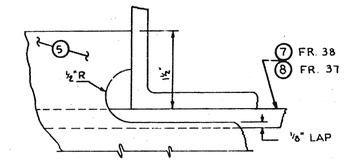

DETAIL 14-H
FR. 38 - FR. 37 OPP.
SCALE: 1" = 1'-0"

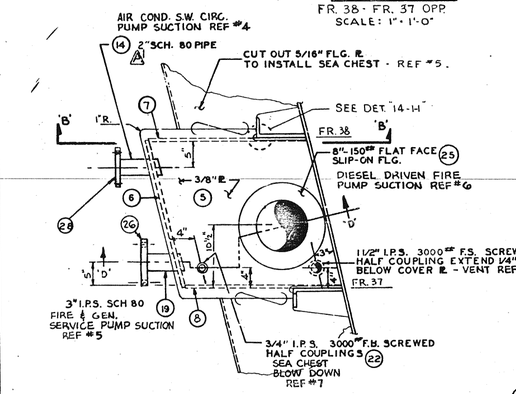

PLAN
(PORT)

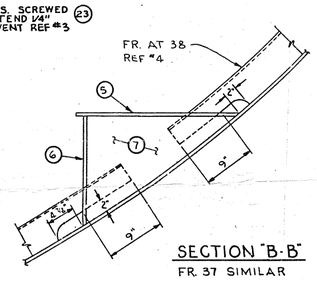

SECTION "B-B"
FR. 37 SIMILAR

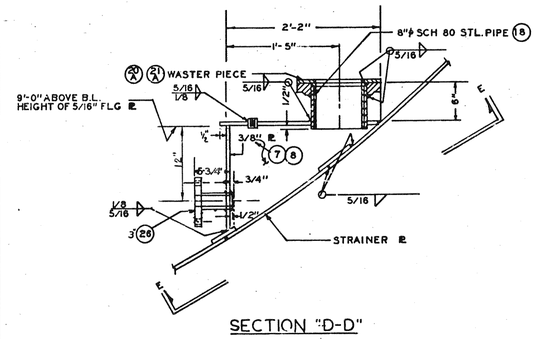

SECTION "D-D"

(4) 3/8" STL. STRAI
15"x17"
ON 11/16
CORNE

(9) 3

(10) 3/16" STL. STRAI
414 - 1/2" I.D. HOLE
TACK WELD CORN

120-4442381

CONTRACT NO.: N00024-72-C-0216
CODE IDENT NO.: 80064

(B) SHT-2 OF 3

0164

SHT 2 OF 22