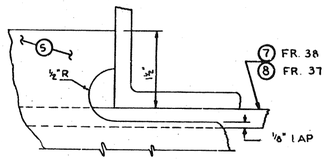

DETAIL 14-H
FR. 38 - FR. 37 OPP.
SCALE: 1" = 1' 0"

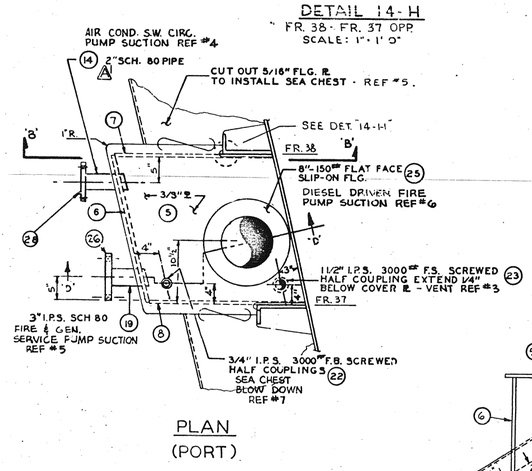

PLAN
(PORT)

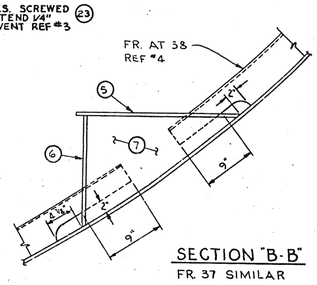

SECTION "B-B"
FR. 37 SIMILAR

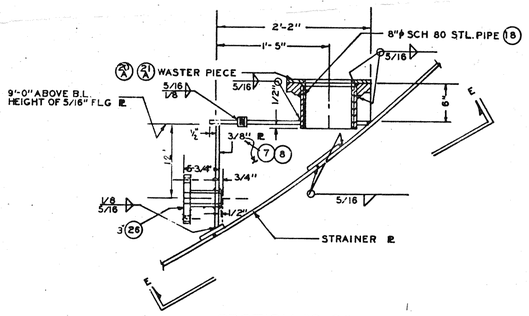

SECTION "D-D"

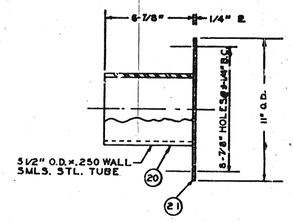

WASTER PIECE
(LOW SEA CHEST)
SCALE: 3" = 1'-0"

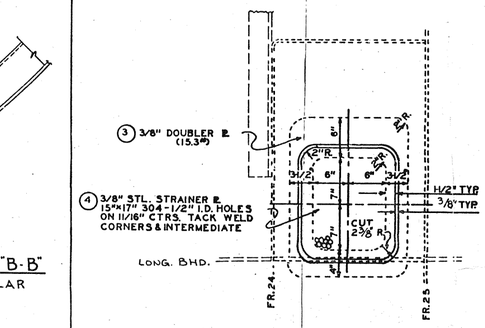

VIEW G-G
DOUBLER STRAINER
DETAIL

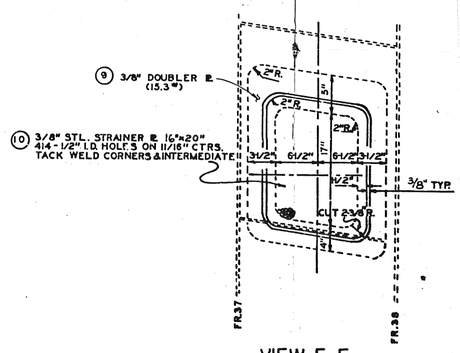

VIEW E-E
DOUBLER-STRAINER
FIRE GEN'L SER. & BALLAST SEA CHEST
(PORT)

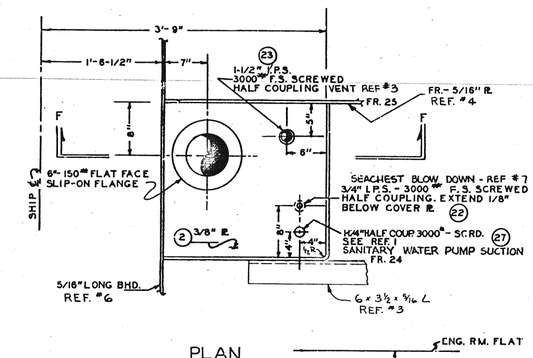

PLAN

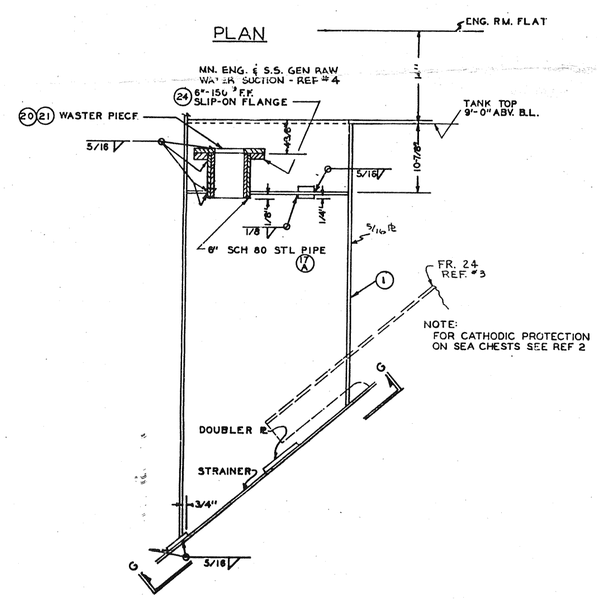

SECTION F-F
LOW SEA CHEST
(PORT)

ITEM NO.	QTY REQ	CODE IDENT.	PART NO.	SYMBOL	DESCRIPTION
28	1				WELD FLANGE FLAT FACE SLIP
27	1				HALF COUPLING 1-1/4" SCRD. 3000
26	1				WELD FLANGE FLAT FACE SLIP O
25	1				WELD FLANGE FLAT FACE SLIP ON 8" -
24	2				WELD FLANGE FLAT FACE, SLIP ON
23	3				HALF COUPLING 1-1/2" I.P.S. 3000# S
22	3				HALF COUPLING 3/4" I.P.S. 3000# S

PA

120-4442381

CONTRACT NO.: N00024-72-C-0216
CODE IDENT NO.: 80064

(C) SHT - 3 OF 3

01672

SHT 3 OF 22