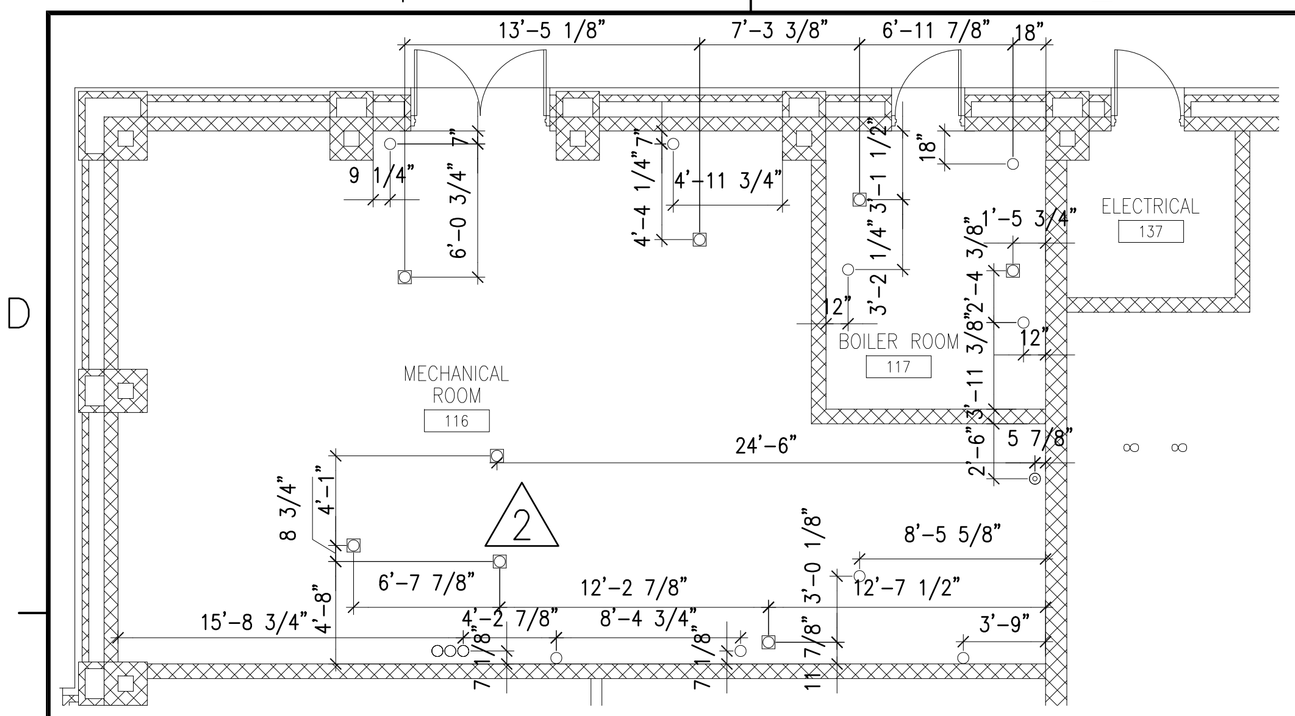

MECH ROOM ENLARGED PLAN

SCALE= 3/16" = 1'-0"

A-001 C1

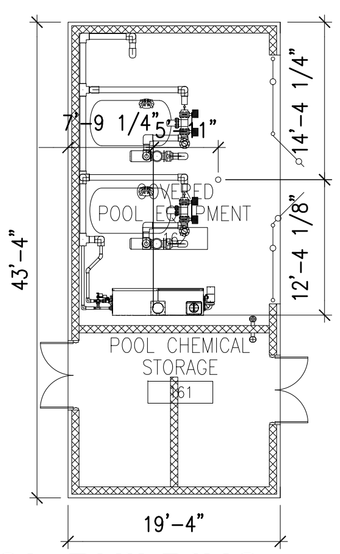

POOL BUILDING REFERENCE PLAN

SCALE: 3/32" = 1'-0"

PLAN NORTH

GENERAL NOTES:

1. THIS PLAN IS FOR DIMENSIONAL REFERENCE ONLY. THE PURPOSE IS FOR THE CONTRACTOR TO BE ABLE TO PROPERLY LAYOUT SLAB PENETRATIONS SUCH AS PLUMBING FIXTURES.
2. "PACKAGE #2" WILL HAVE A FULLY DIMENSIONED FLOOR PLAN
3. THIS PLAN IS NOT MEANT ANY INTERIOR OR EXTERIOR WALL CONSTRUCTION
4. CMU WALLS ARE INDICATED BY THE HATCH PATTERN:
5. THE CONTRACTOR WILL HAVE TO DETERMINE EXACT SLAB PENETRATION LOCATIONS BASED ON THE WALL LAYOUT AND THE TYPE OF PLUMBING FIXTURE IT IS GOING TO

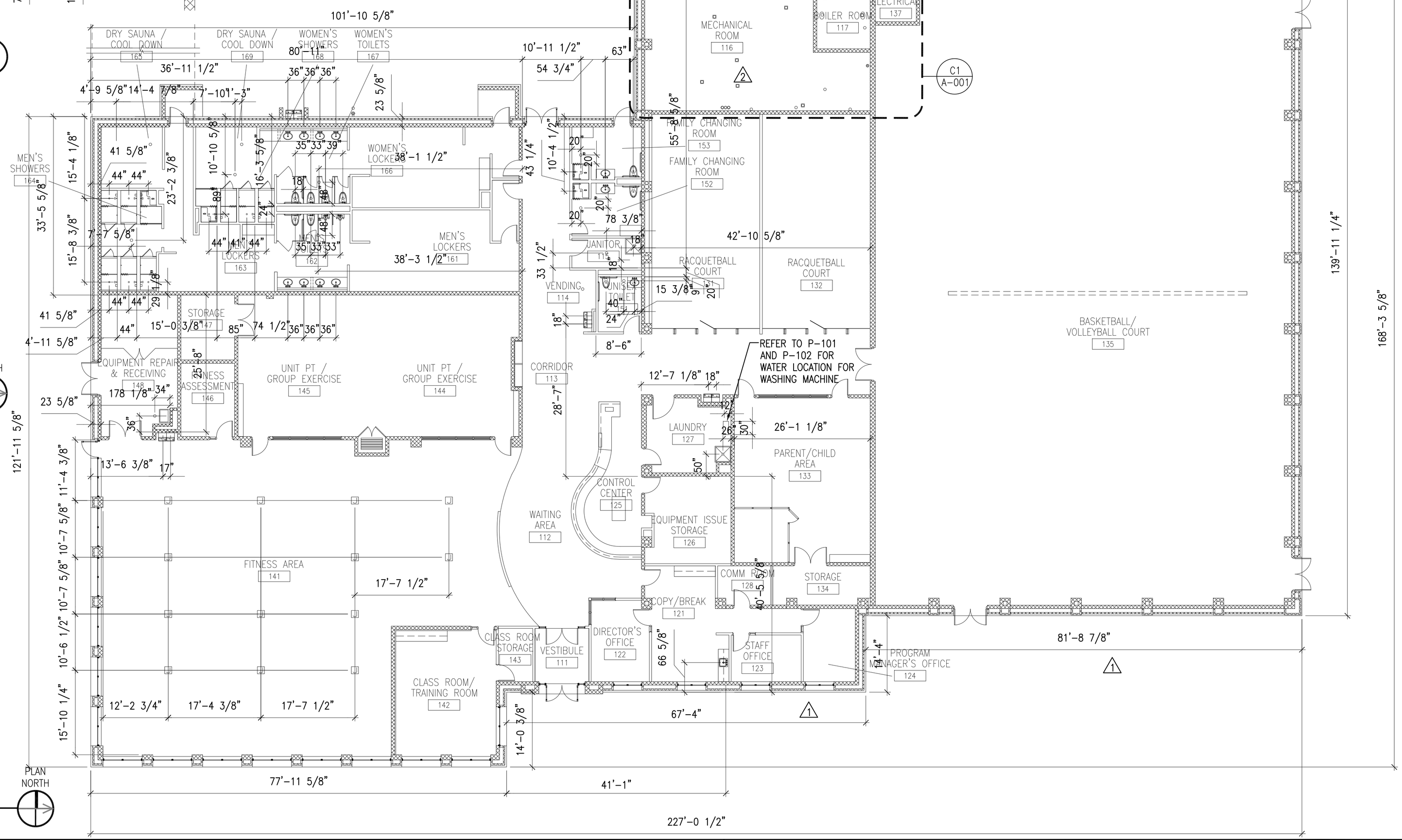

OVERALL REFERENCE PLAN

SCALE: 3/32" = 1'-0"

PLAN NORTH

4' 0 4' 8' 16'

SCALE: 3/32"=1'-0"

SYM	DESCRIPTION	DATE	APPR
2	AS BUILT	8/13/2012	
1	ASI #06	03/21/11	
	ASI #03	02/10/11	

NAVFAC

RECORD DRAWINGS 08/13/2012

This record drawing is a compilation of information from the contract documents for this project including ASI's, RFI's, Change Orders, and information provided by the contractor, The Ross Group.

SEAL

LEO A DALY

PLANNING ARCHITECTURE ENGINEERING INTERIORS

EST. 1915

2925 Briarpark Drive
Houston, Texas 77042
Tel 713-821-2100
Fax 713-266-7182

A/E INFO

APPROVED

FOR COMMANDER NAVFAC / B.L.T.L.

ACTIVITY

Olsin Courtney 12/22/10
Curtis M Derrick

SATISFACTORY TO DATE

DES	MJ	DRW	MJ	CHK	MJ

PROJECT MANAGER •

IPT TECH. BRANCH HEAD •

CHIEF ENG/ARCH (CORE) •

DEPARTMENT OF THE NAVY
NAVAL FACILITIES ENGINEERING COMMAND
IPT GULF COAST

NAVAL FACILITIES ENGINEERING COMMAND SOUTHEAST
NAVAL AIR STATION JACKSONVILLE

NAVAL AIR STATION KINGSVILLE
KINGSVILLE, TEXAS

INDOOR PHYSICAL FITNESS FACILITY

OVERALL LEVEL 1 REFERENCE PLAN

SCALE: 3/32" = 1'-0"

EPROJECT NO.: 812380

CONSTR. CONTR. NO. N69450-10-D-0771

NAVFAC DRAWING NO. 15067965- 15068165

SHEET • OF •

A-001

DRAWFORM REVISION: 7 AUGUST 2009

FILE NAME: J:\110-10137-000\4-0-Production\4-01-Drawings\Architecture\BLDGPZ79-812380-A-001.dwg LAYOUT NAME: Layout1 PLOTTED: Saturday, August 11, 2012 - 2:17pm USER: MJACKSON

GENERAL NOTES
1. FOR PARTITION TYPES SEE A-511
2. FOR DOOR SCHEDULE SEE A-602
3. FOR WINDOW TYPES SEE A-601
4. FOR ACCESSORIES SCHEDULE AND EQUIPMENT MOUNTING HEIGHTS SEE A-611
5. MOST SPECIFIC INFORMATION CAN BE FOUND IN ENLARGED PLANS WHERE THEY OCCUR.
6. ALL DIMENSIONS GIVEN TO FINISHED FACE OF PARTITIONS.
7. ALL INTERIOR CMU AT OUTSIDE CORNERS, WINDOW JAMBS AND SILLS, AND DOOR JAMBS TO BE BULLNOSED.
8. FOR WINDOW SILL DETAILS SEE A-321

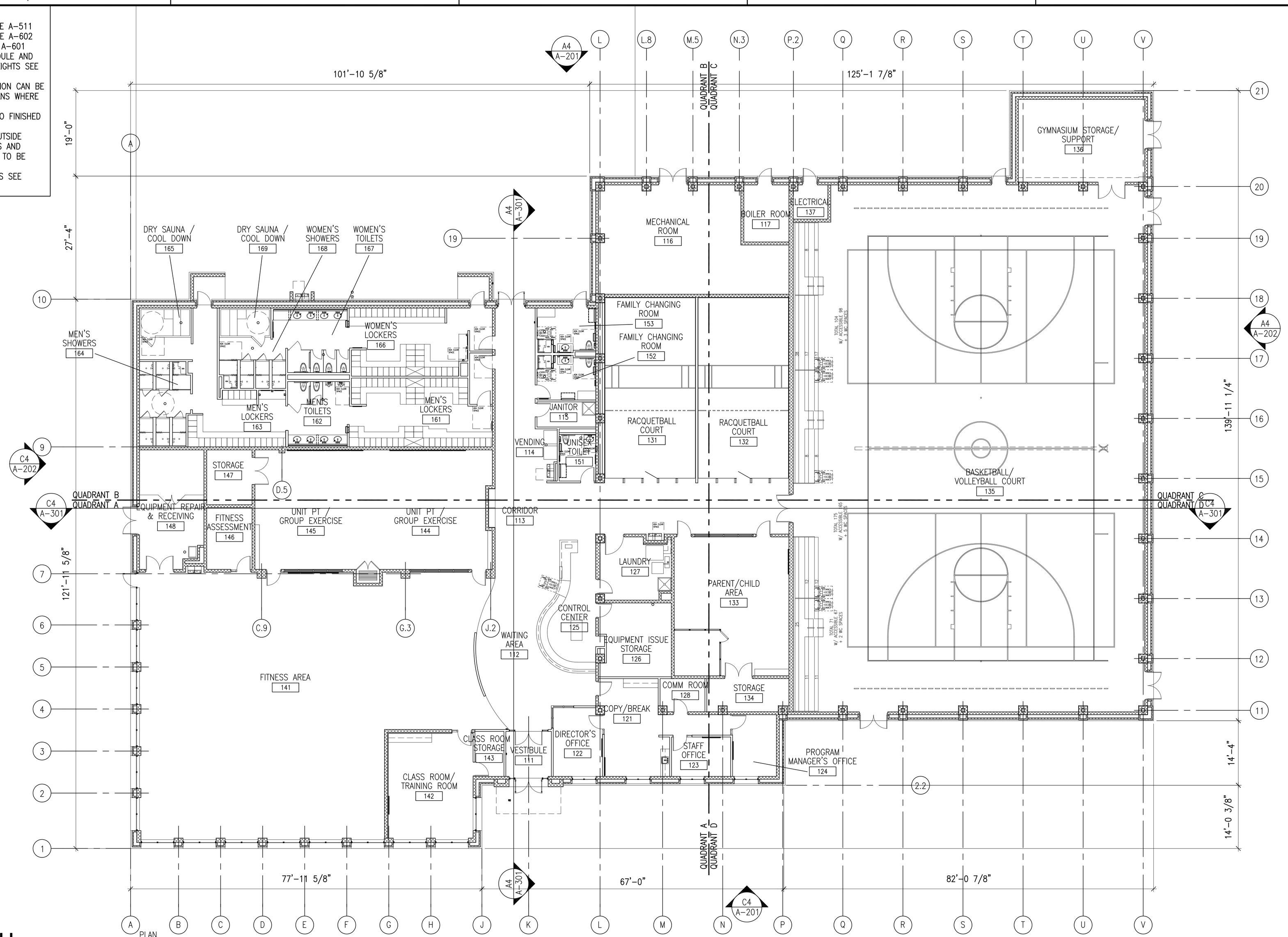

OVERALL FLOOR PLAN

SCALE: 3/32" = 1'-0"

APPR	
DATE	8/13/2012
DESCRIPTION	AS BUILT
CTM	

NAVFAC

RECORD DRAWINGS
08/13/2012
This record drawing is a compilation of information from the contract documents for this project including ASI's, RFI's, Change Orders, and information provided by the contractor, The Ross Group.

SEAL

LEO A DALY
PLANNING ARCHITECTURE ENGINEERING INTERIORS
EST. 1915

2925 Briarpark Drive
Houston, Texas 77042
Tel 713-821-2100
Fax 713-266-7182
A/E INFO

APPROVED
FOR COMMANDER NAVFAC / B.L.T.L.
ACTIVITY
SATISFACTORY TO DATE Oisin Courtesy 5/5/11
DES MEJ DRW DHN CHK MEJ
PROJECT MANAGER •
IPT TECH. BRANCH HEAD •
CHIEF ENG/ARCH (CORE) •

DEPARTMENT OF THE NAVY
NAVAL FACILITIES ENGINEERING COMMAND
IPT GULF COAST
NAVAL FACILITIES ENGINEERING COMMAND SOUTHEAST
NAVAL AIR STATION JACKSONVILLE
NAVAL AIR STATION KINGSVILLE
KINGSVILLE, TEXAS
INDOOR PHYSICAL FITNESS FACILITY
OVERALL FLOOR PLAN

SCALE: 3/32" = 1'-0"
EPROJECT NO.: 812380
CONSTR. CONTR. NO. N69450-10-D-0771
NAVFAC DRAWING NO. 15067967-15068165
SHEET • OF •
A-100

DRAWFORM REVISION: 7 AUGUST 2009

FILE NAME: J:\110-10137-000\4-0-Production\4-01-Drawings\Architecture\BLDGP279-812380-A-100.dwg LAYOUT NAME: Layout1 PLOTTED: Saturday, August 11, 2012 - 2:16pm USER: MJACKSON

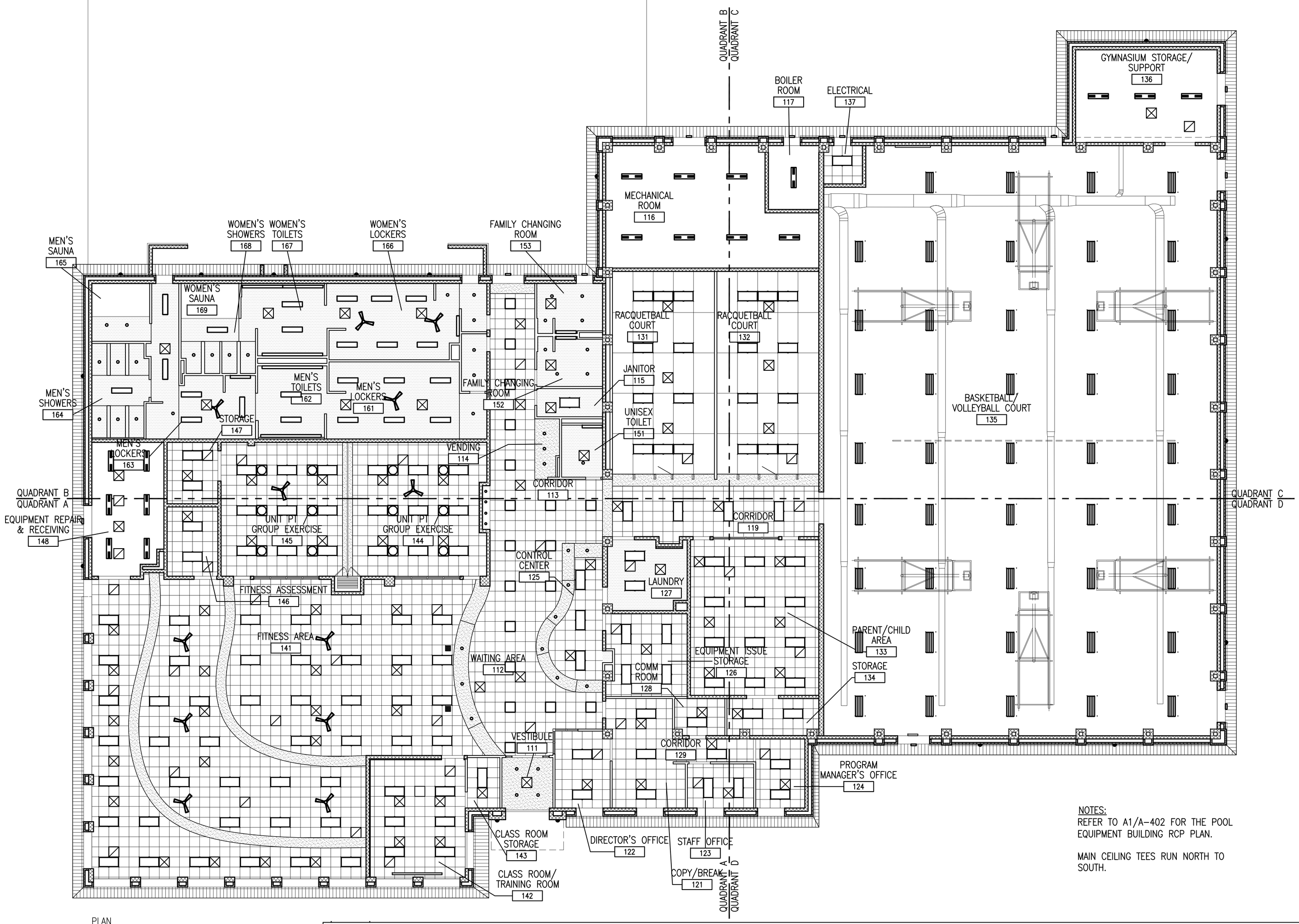

NOTES:
REFER TO A1/A-402 FOR THE POOL EQUIPMENT BUILDING RCP PLAN.

MAIN CEILING TEES RUN NORTH TO SOUTH.

OVERALL CEILING PLAN

SCALE: 3/32" = 1'-0"

PLAN NORTH

4' 0 4' 8' 16'
SCALE: 3/32"=1'-0"

HIGH BAY FLUORESCENT
RECESSED FLUORESCENT 2' X 2'
RECESSED FLUORESCENT 1' X 4'
CHAIN HUNG FLUORESCENT
RECESSED FLUORESCENT 2' X 4'
RECESSED DOWNLIGHT
SOLATUBES
WALL MOUNTED DIRECT/ INDIRECT 4'
WALL MOUNTED DIRECT/ INDIRECT 8'
WALL MOUNTED DIRECT/ INDIRECT 12'
EXTERIOR WALL SCONCE
WALL MTD EMERGENCY LIGHT
PROJECTOR MOUNT
RETURN AIR DIFFUSER
SUPPLY AIR DIFFUSER
CONTROL JOINT, RE: B1/A-541
CEILING FAN
METAL SOFFIT
RACQUETBALL COURT CEILING SYSTEM, RE: A3/A-542
EXPLOSION PROOF FLUORESCENT LIGHT
GYP BD CEILING (PT4 UNO)
SUSPENDED ACOUSTICAL TILES (AT1)
VENEER PLASTER (PT4E)
SUPPORT FOR TV TRANSMITTER, RE: A5/A-542

CTM	DESCRIPTION	DATE	APPR
	AS BUILT	8/13/2012	

NAVFAC

RECORD DRAWINGS
08/13/2012
This record drawing is a compilation of information from the contract documents for this project including ASI's, RFI's, Change Orders, and information provided by the contractor, The Ross Group.

SEAL

LEO A DALY
PLANNING ARCHITECTURE ENGINEERING INTERIORS
EST. 1915
2925 Briarpark Drive
Houston, Texas 77042
Tel 713-821-2100
Fax 713-266-7182
A/E INFO

APPROVED
FOR COMMANDER NAVFAC / B.L.T.L.
ACTIVITY
SATISFACTORY TO DATE Oisin Courtney 5/5/11
DES JLL DRW JLL CHK MEJ
PROJECT MANAGER •
IPT TECH. BRANCH HEAD •
CHIEF ENG/ARCH (CORE) •

DEPARTMENT OF THE NAVY
NAVAL FACILITIES ENGINEERING COMMAND
IPT GULF COAST
NAVAL FACILITIES ENGINEERING COMMAND SOUTHEAST
NAVAL AIR STATION JACKSONVILLE
NAVAL AIR STATION KINGSVILLE
KINGSVILLE, TEXAS
INDOOR PHYSICAL FITNESS FACILITY
OVERALL CEILING PLAN

SCALE: 3/32" = 1'-0"
EPROJECT NO.: 812380
CONSTR. CONTR. NO. N69450-10-D-0771
NAVFAC DRAWING NO. 15067974→15068165
SHEET • OF •
A-130

DRAWFORM REVISION: 7 AUGUST 2009

FILE NAME: J:\110-10137-000\4-0-Production\4-01-Drawings\Architecture\BLDGP279-812380-A-130.dwg LAYOUT NAME: Layout1 PLOTTED: Saturday, August 11, 2012 - 2:12pm USER: MJACKSON

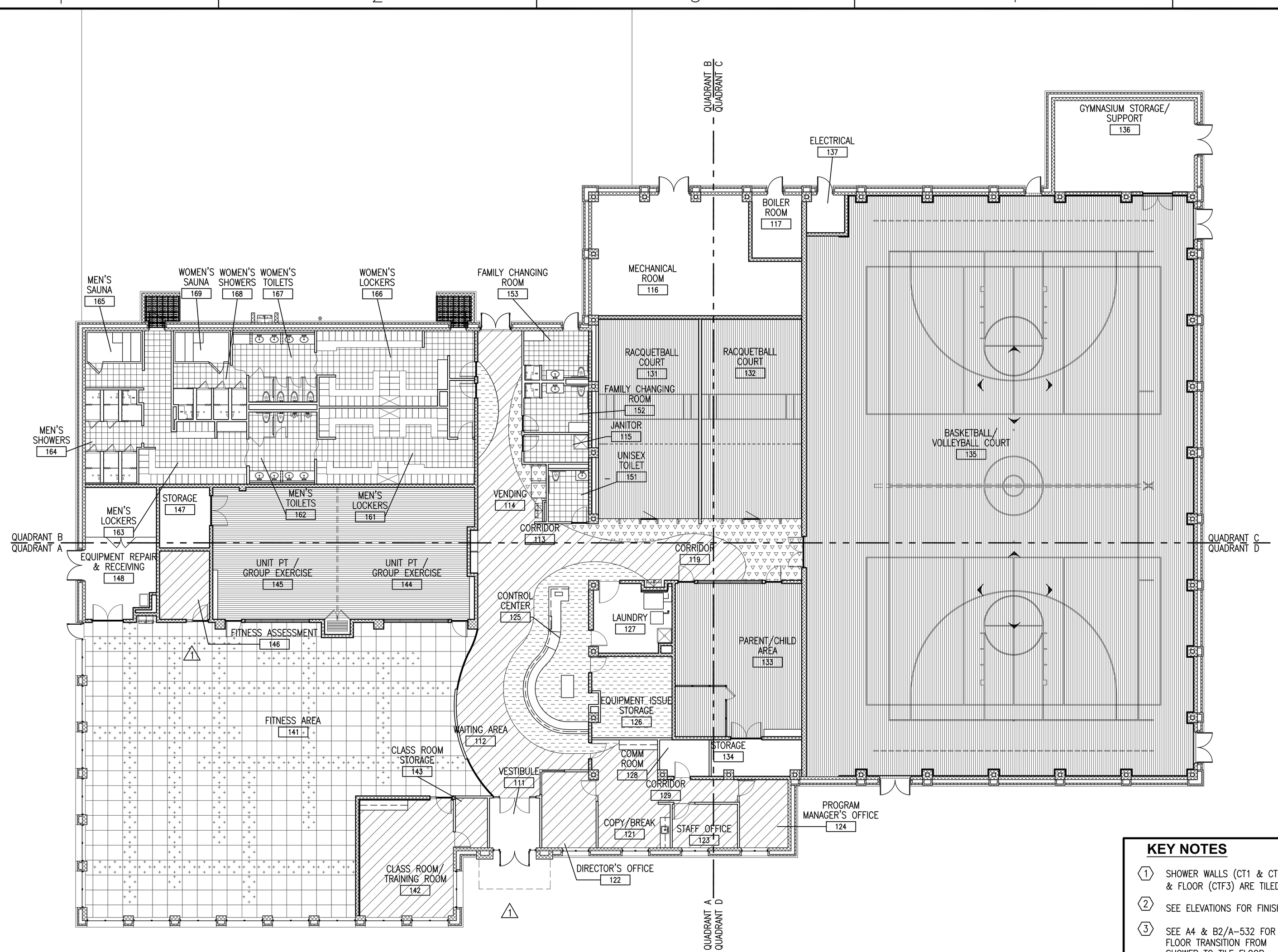

OVERALL FINISH PLAN

SCALE: 3/32" = 1'-0"

PLAN NORTH

4' 0 4' 8' 16'
SCALE: 3/32"=1'-0"

KEY NOTES

1. SHOWER WALLS (CT1 & CTB1) & FLOOR (CTF3) ARE TILED.
2. SEE ELEVATIONS FOR FINISHES.
3. SEE A4 & B2/A-532 FOR FLOOR TRANSITION FROM SHOWER TO TILE FLOOR.
4. WINDOW BLINDS
5. HIGH IMPACT WALL PANEL UP TO 20" AFF
6. ROOM DARKENING BLINDS
7. FLOOR FINISH CONTINUES TO WALL. FOR MEN'S & WOMEN'S LOCKER ROOMS ONLY RE: A1/A-551.

FINISH LEGEND

CPT1– BLUE WALK-OFF MAT
CT1– 6" X 6" WHITE TILE
CT2– 6" X 6" BLUE TILE
CT3– 1" X 1" ACCENT TILE
CTB1– BASE TO MATCH CT1
CTF1– 14" X 14" WHITE FLOOR TILE
CTF2– 14" X 14" BLUE/GREEN FLOOR TILE
CTF3– 2" X 2" SHOWER FLOOR TILE
FF1– SEALED CONCRETE
PT1– BEIGE PAINT
PT1E– BEIGE PAINT (EPOXY)
PT2– NAVY BLUE PAINT
PT3– APPLE GREEN PAINT
PT3E– APPLE GREEN PAINT (EPOXY)
PT4– WHITE PAINT (FLAT)
PT4E– WHITE PAINT (EPOXY)
PT5– LIGHT BLUE PAINT
PT6– DK. BEIGE PAINT (ENAMEL)
PT7– NAVY BLUE PAINT (ENAMEL)
PT8– LIGHT BLUE PAINT (ENAMEL)
PT9– BEIGE PAINT (ENAMEL)
PT10– DK. BRONZE PAINT
PT11– DK. BRONZE PAINT (ENAMEL)
RB1– 4" BLACK RUBBER BASE
RB2– 4" BLACK VENTED RUBBER BASE
WF1– NOT USED
WF2– RACQUETBALL WALL SYSTEM

FF2–MAPLE SPORTS FLOORING
FF3–GOLD STAINED CONCRETE
FF5–BLUE STAINED CONCRETE
FF6–BROWN STAINED CONCRETE
CTF1 & CTF2–14" X 14" FLOOR TILE
RTF1–3' X 3' BEIGE RUBBER FLOOR TILE
RTF2–3' X 3' BLUE RUBBER FLOOR TILE
XX# XX# TAG FOR DOOR FINISH (ON TOP) AND DOOR FRAME FINISH (ON BOTTOM). FOR HM DOORS ONLY.
13" X 13" BLUE POOL MAT

CTM	DESCRIPTION	DATE	APPR
1	ASI #14	09/28/11	
	AS BUILT	8/13/2012	

NAVFAC

RECORD DRAWINGS 08/13/2012
This record drawing is a compilation of information from the contract documents for this project including ASI's, RFI's, Change Orders, and information provided by the contractor, The Ross Group.

SEAL

LEO A DALY
PLANNING ARCHITECTURE ENGINEERING INTERIORS
EST. 1915
2925 Briarpark Drive
Houston, Texas 77042
Tel 713-821-2100
Fax 713-266-7182
A/E INFO

APPROVED
FOR COMMANDER NAVFAC / B.L.T.L.
ACTIVITY
SATISFACTORY TO DATE Oisin Courtney 5/5/11
DES JLL DRW JLL CHK MEJ
PROJECT MANAGER
IPT TECH. BRANCH HEAD
CHIEF ENG/ARCH (CORE)

DEPARTMENT OF THE NAVY
NAVAL FACILITIES ENGINEERING COMMAND
IPT GULF COAST
NAVAL FACILITIES ENGINEERING COMMAND SOUTHEAST
NAVAL AIR STATION JACKSONVILLE
NAVAL AIR STATION KINGSVILLE
KINGSVILLE, TEXAS
INDOOR PHYSICAL FITNESS FACILITY
OVERALL FINISH PLAN

SCALE: 3/16" = 1'-0"
EPROJECT NO.: 812380
CONSTR. CONTR. NO. N69450-10-D-0771
NAVFAC DRAWING NO. 15067979-15068165
SHEET • OF •
A-140

DRAWFORM REVISION: 7 AUGUST 2009

FILE NAME: J:\110-10137-000\4-0-Production\4-01-Drawings\Architecture\BLDGP279-812380-A-140.dwg LAYOUT NAME: Layout1 PLOTTED: Saturday, August 11, 2012 - 2:05pm USER: MJACKSON

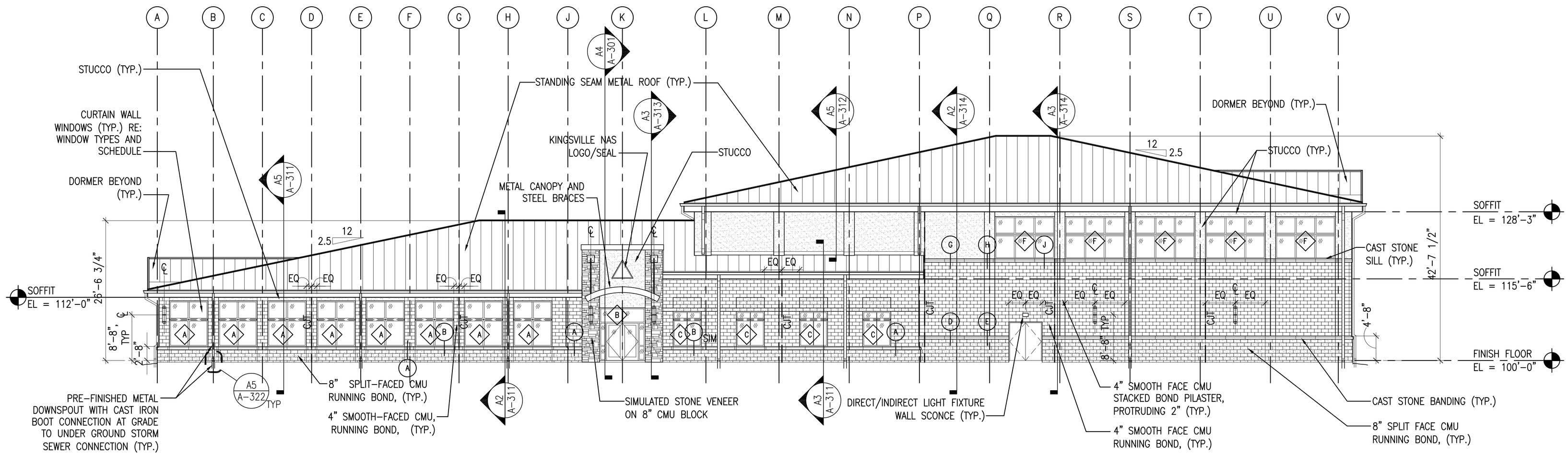

EAST ELEVATION

SCALE: 3/32" = 1'-0" PLANS C4

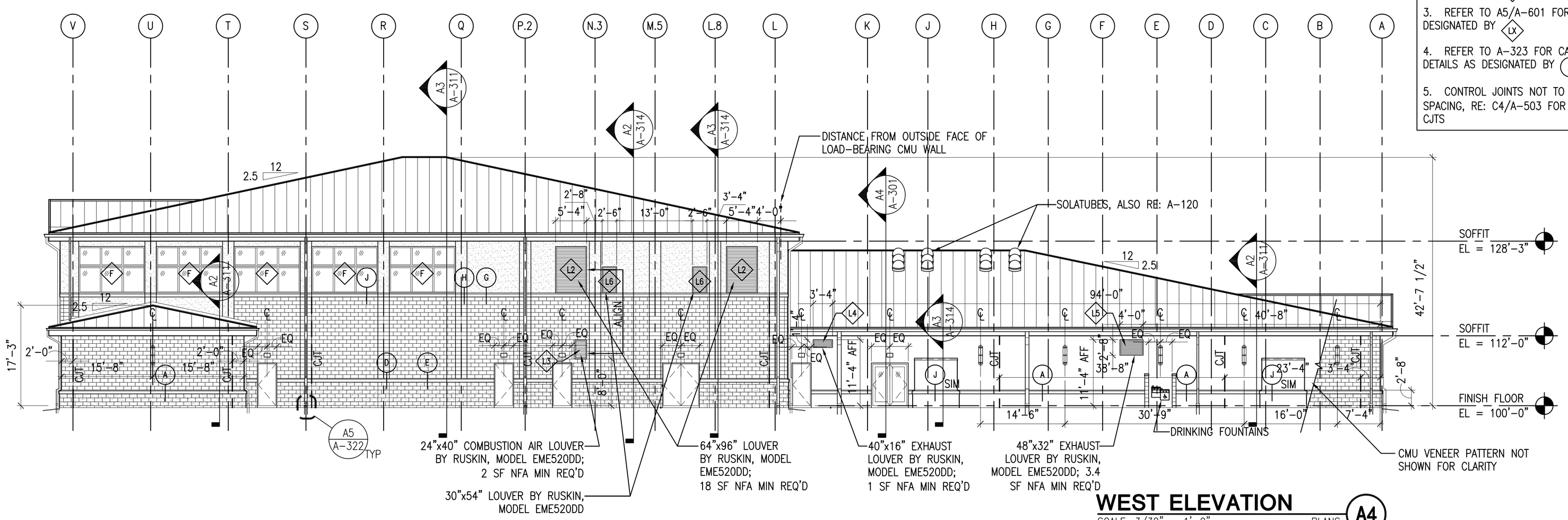

WEST ELEVATION

SCALE: 3/32" = 1'-0" PLANS A4

SCALE: 3/32"=1'-0"

EXTERIOR ELEVATIONS GENERAL NOTES

1. REFER TO EXTERIOR ELEVATION DRAWING C4/A-201 FOR TYPICAL MATERIAL, FINISH, AND CONSTRUCTION NOTES
2. REFER TO A3/A-601 FOR WINDOW TYPES AS DESIGNATED BY (X)
3. REFER TO A5/A-601 FOR LOUVER TYPES AS DESIGNATED BY (LX)
4. REFER TO A-323 FOR CAST STONE BAND DETAILS AS DESIGNATED BY (X)
5. CONTROL JOINTS NOT TO EXCEED 30' IN SPACING, RE: C4/A-503 FOR CMU AND STUCCO CJTS

SYM	DESCRIPTION	DATE	APPR
	AS BUILT	8/13/2012	

NAVFAC

RECORD DRAWINGS 08/13/2012
This record drawing is a compilation of information from the contract documents for this project including ASI's, RFI's, Change Orders, and information provided by the contractor, The Ross Group.

SEAL

LEO A DALY
PLANNING ARCHITECTURE ENGINEERING INTERIORS
EST. 1915
2925 Briarpark Drive
Houston, Texas 77042
Tel 713-821-2100
Fax 713-266-7182
A/E INFO

APPROVED
FOR COMMANDER NAVFAC / B.L.T.L.
ACTIVITY
SATISFACTORY TO DATE Oisin Courtney 5/5/11
DES MJ DRW JB CHK JB
PROJECT MANAGER
IPT TECH. BRANCH HEAD
CHIEF ENG/ARCH (CORE)

DEPARTMENT OF THE NAVY
NAVAL FACILITIES ENGINEERING COMMAND
IPT GULF COAST
NAVAL FACILITIES ENGINEERING COMMAND SOUTHEAST
NAVAL AIR STATION JACKSONVILLE
NAVAL AIR STATION KINGSVILLE
KINGSVILLE, TEXAS

INDOOR PHYSICAL FITNESS FACILITY

EXTERIOR ELEVATIONS (EAST & WEST)

SCALE: 3/32" = 1'-0"
EPROJECT NO.: 812380
CONSTR. CONTR. NO. N69450-10-D-0771
NAVFAC DRAWING NO. 15067984-15068165
SHEET OF

A-201

DRAWFORM REVISION: 7 AUGUST 2009

FILE NAME: J:\110-10137-000\4-0-Production\4-01-Drawings\Architecture\BLDGP279-812380-A-201.dwg LAYOUT NAME: Layout1 PLOTTED: Saturday, August 11, 2012 - 2:27pm USER: MJACKSON

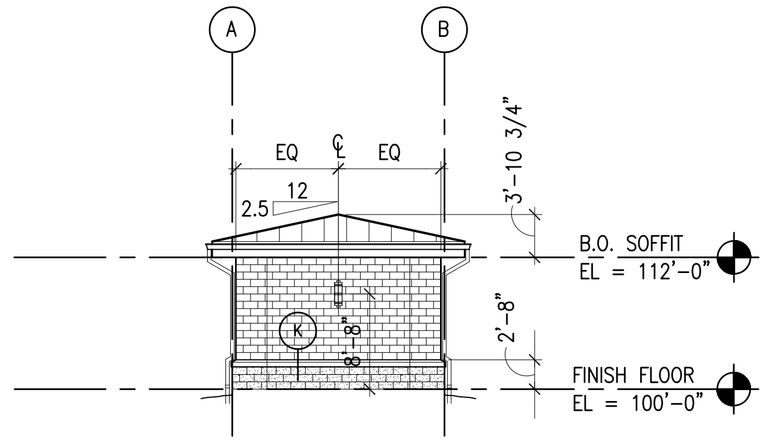

NOTE: PLEASE REFER TO EXTERIOR ELEVATION DRAWING A1/A-202 FOR TYPICAL MATERIAL, FINISH, AND CONSTRUCTION NOTES.

EAST ELEVATION; WEST ELEVATION (SIM) C1

SCALE: 3/32" = 1'-0" PLANS

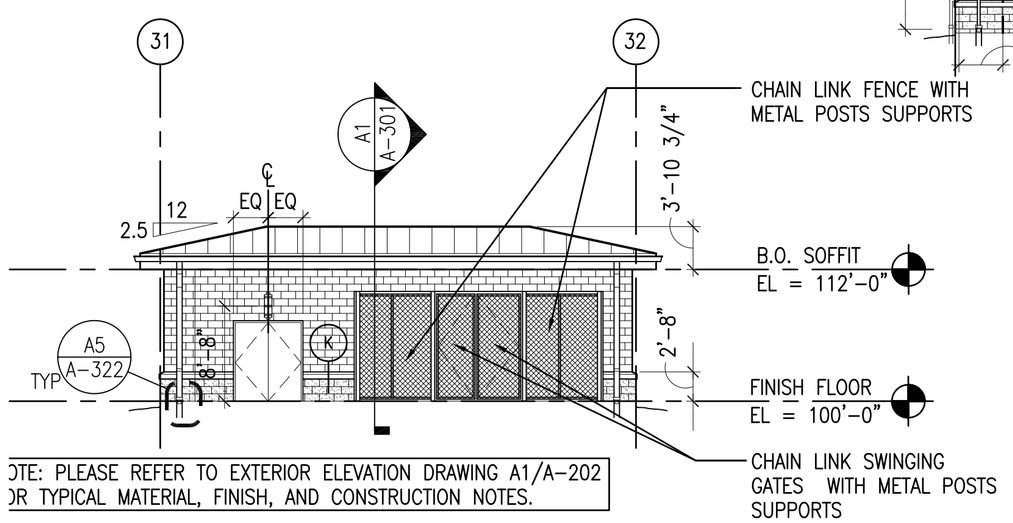

NOTE: PLEASE REFER TO EXTERIOR ELEVATION DRAWING A1/A-202 FOR TYPICAL MATERIAL, FINISH, AND CONSTRUCTION NOTES.

POOL BLDG, NORTH ELEVATION B1

SCALE: 3/32" = 1'-0" PLANS

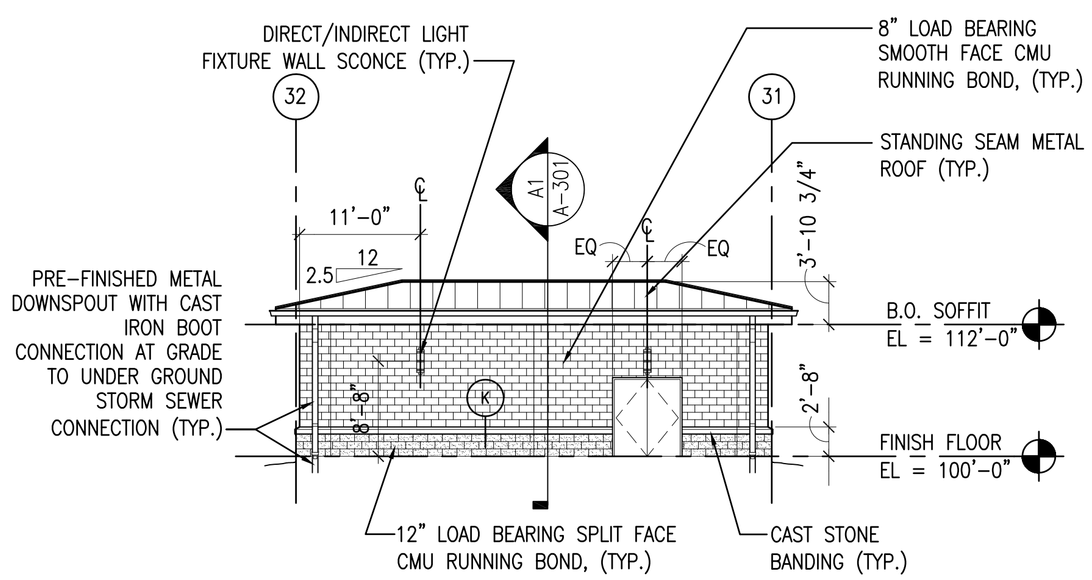

POOL BLDG, SOUTH ELEVATION A1

SCALE: 3/32" = 1'-0" PLANS

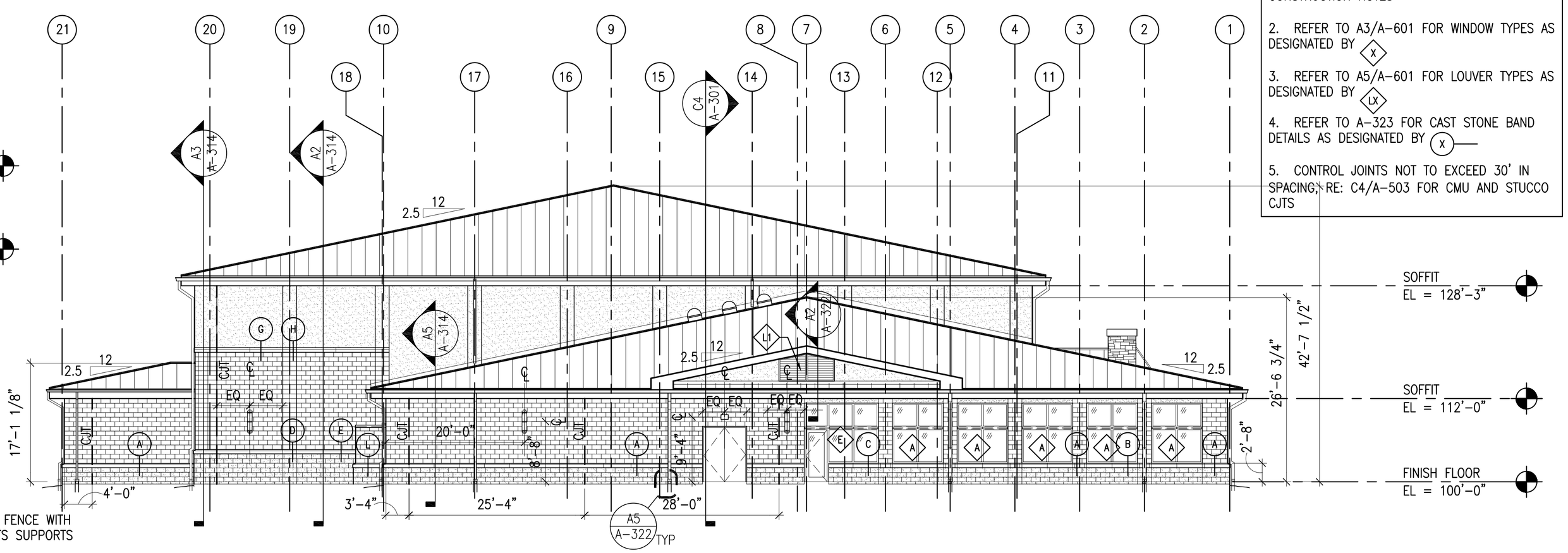

SOUTH ELEVATION C4

SCALE: 3/32" = 1'-0" PLANS

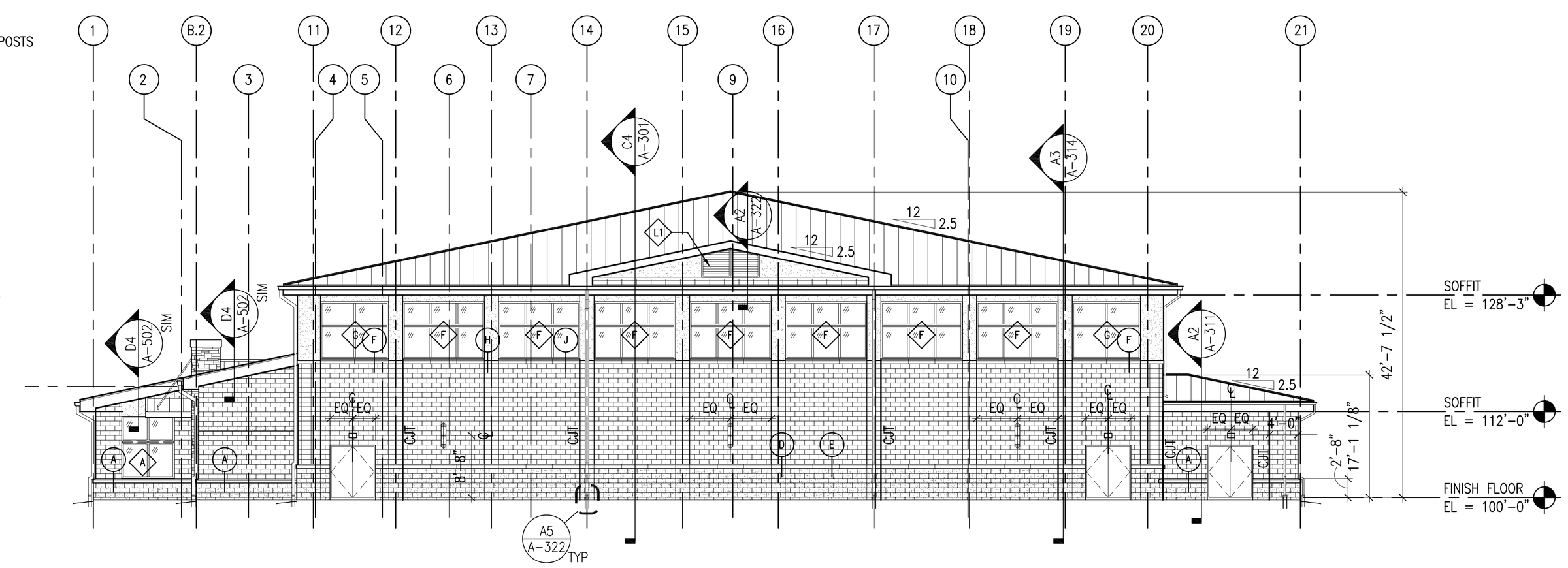

NORTH ELEVATION A4

SCALE: 3/32" = 1'-0" PLANS

SCALE: 3/32"=1'-0"

EXTERIOR ELEVATIONS GENERAL NOTES

1. REFER TO EXTERIOR ELEVATION DRAWING C4/A-201 FOR TYPICAL MATERIAL, FINISH, AND CONSTRUCTION NOTES
2. REFER TO A3/A-601 FOR WINDOW TYPES AS DESIGNATED BY X
3. REFER TO A5/A-601 FOR LOUVER TYPES AS DESIGNATED BY LX
4. REFER TO A-323 FOR CAST STONE BAND DETAILS AS DESIGNATED BY X
5. CONTROL JOINTS NOT TO EXCEED 30' IN SPACING; RE: C4/A-503 FOR CMU AND STUCCO CJTS

SYM	DESCRIPTION	DATE	APPR
	AS BUILT	8/13/2012	

NAVFAC

RECORD DRAWINGS
08/13/2012
This record drawing is a compilation of information from the contract documents for this project including ASI's, RFI's, Change Orders, and information provided by the contractor, The Ross Group.

SEAL

LEO A DALY
PLANNING ARCHITECTURE ENGINEERING INTERIORS
EST. 1915
2925 Briarpark Drive
Houston, Texas 77042
Tel 713-821-2100
Fax 713-266-7182
A/E INFO

APPROVED

FOR COMMANDER NAVFAC / B.L.T.L.

ACTIVITY

SATISFACTORY TO DATE Oisin Courtney 5/5/11

DES	MJ	DRW	JB	CHK	JB

PROJECT MANAGER •
IPT TECH. BRANCH HEAD •
CHIEF ENG/ARCH (CORE) •

DEPARTMENT OF THE NAVY
NAVAL FACILITIES ENGINEERING COMMAND
IPT GULF COAST
NAVAL FACILITIES ENGINEERING COMMAND SOUTHEAST
NAVAL AIR STATION JACKSONVILLE
NAVAL AIR STATION KINGSVILLE
KINGSVILLE, TEXAS

INDOOR PHYSICAL FITNESS FACILITY

EXTERIOR ELEVS (NORTH, SOUTH, & POOL BLDG.)

SCALE 3/32" = 1'-0"
EPROJECT NO.: 812380
CONSTR. CONTR. NO. N69450-10-D-0771
NAVFAC DRAWING NO. 15067985-15068165
SHEET • OF •

A-202

DRAWFORM REVISION: 7 AUGUST 2009

FILE NAME: J:\110-10137-000\4-0-Production\4-01-Drawings\Architecture\BLDGP279-812380-A-202.dwg LAYOUT NAME: Layout1 PLOTTED: Saturday, August 11, 2012 - 2:26pm USER: MJACKSON

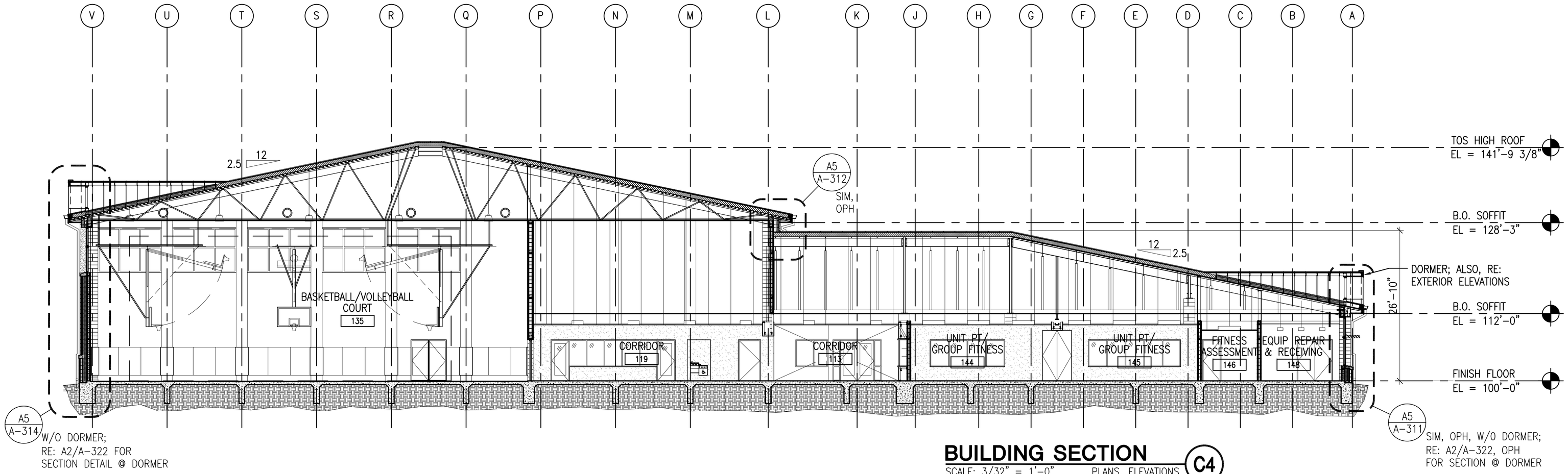

BUILDING SECTION C4

SCALE: 3/32" = 1'-0" PLANS, ELEVATIONS

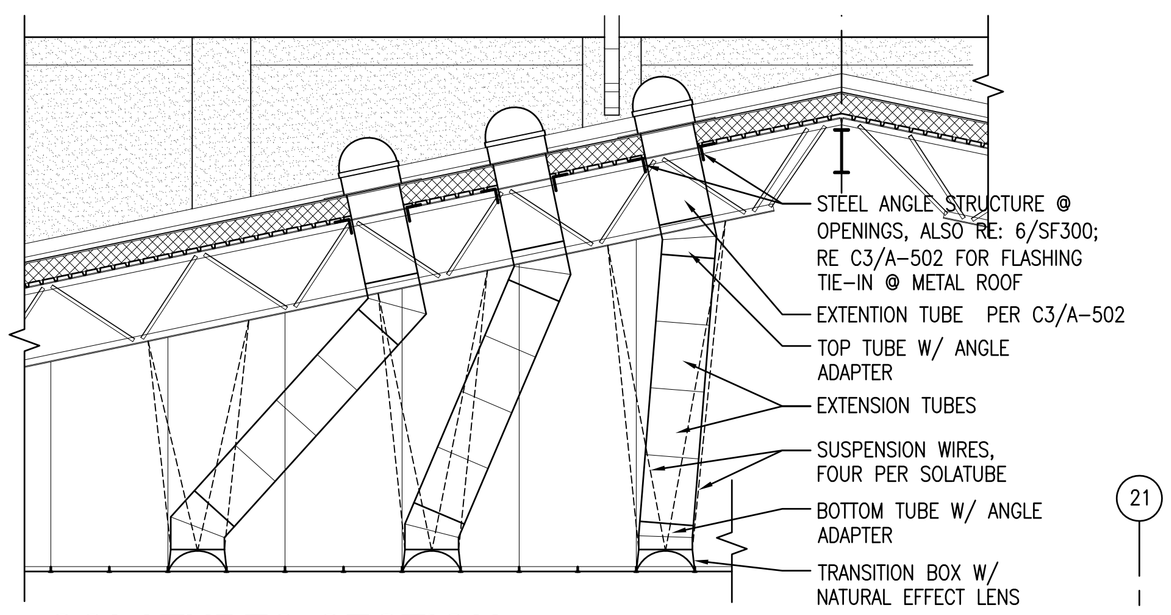

SOLATUBES SECTION @ ROOMS 144 AND 145 B1

SCALE: 1/4" = 1'-0" A-120

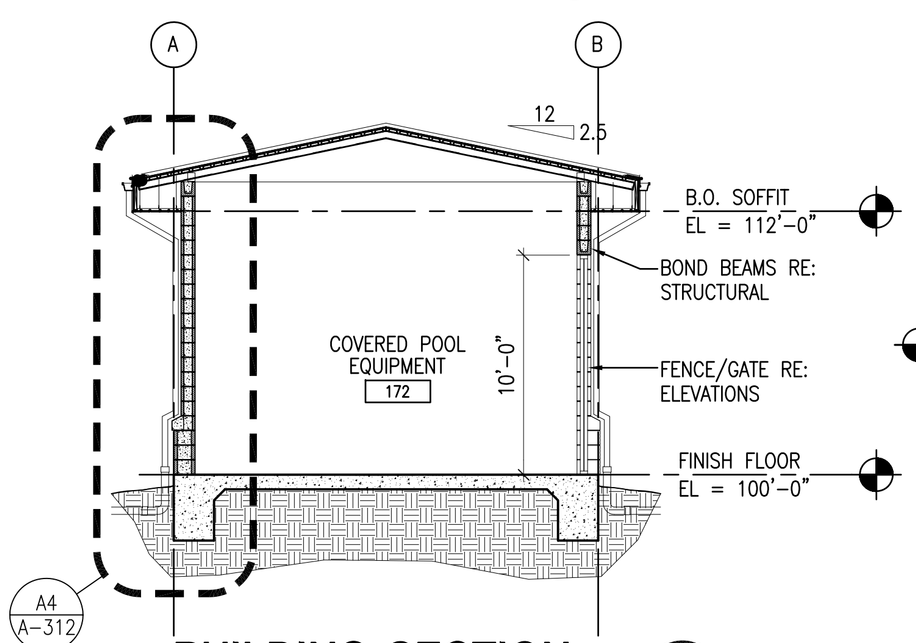

BUILDING SECTION A1

SCALE: 3/16" = 1'-0" PLANS, ELEVATIONS

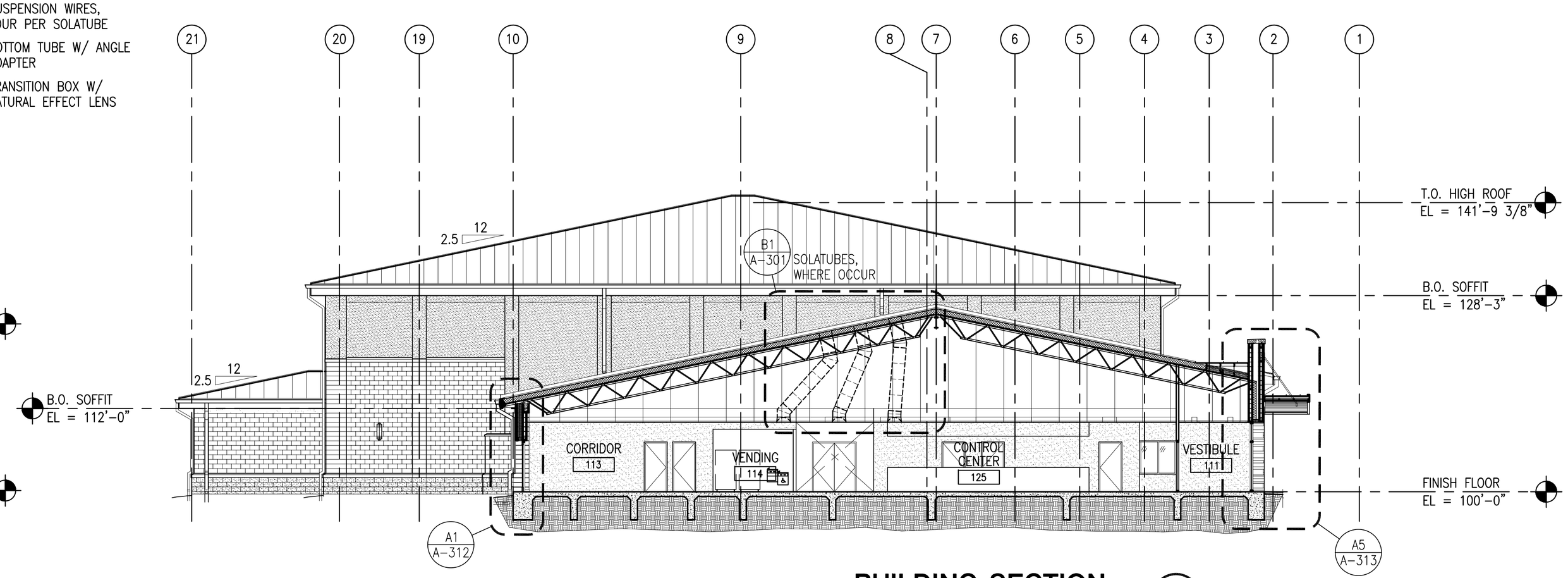

BUILDING SECTION A4

SCALE: 3/32" = 1'-0" PLANS, ELEVATIONS

SCALE: 3/32"=1'-0"

SYM	DESCRIPTION	DATE	APPR
	AS BUILT	8/13/2012	

NAVFAC

RECORD DRAWINGS
08/13/2012
This record drawing is a compilation of information from the contract documents for this project including ASI's, RFI's, Change Orders, and information provided by the contractor, The Ross Group.

SEAL

LEO A DALY
PLANNING
ARCHITECTURE
ENGINEERING
INTERIORS
EST. 1915

2925 Briarpark Drive
Houston, Texas 77042
Tel 713-821-2100
Fax 713-266-7182

A/E INFO

APPROVED

FOR COMMANDER NAVFAC / B.L.T.L.

ACTIVITY

SATISFACTORY TO DATE Olsin Courtney 5/5/11

DES EY DRW JB CHK JB

PROJECT MANAGER

IPT TECH. BRANCH HEAD

CHIEF ENG/ARCH (CORE)

DEPARTMENT OF THE NAVY
NAVAL FACILITIES ENGINEERING COMMAND
NAVAL FACILITIES ENGINEERING COMMAND SOUTHEAST
IPT GULF COAST
NAVAL AIR STATION JACKSONVILLE
NAVAL AIR STATION KINGSVILLE
KINGSVILLE, TEXAS

INDOOR PHYSICAL FITNESS FACILITY

BUILDING SECTIONS

SCALE: 3/32" = 1'-0"

EPROJECT NO.: 812380

CONSTR. CONTR. NO.
N69450-10-D-0771

NAVFAC DRAWING NO.
15067986- 15068165

SHEET OF

A-301

DRAWFORM REVISION: 7 AUGUST 2009

FILE NAME: J:\110-10137-000\4-0-Production\4-01-Drawings\Architecture\BLDGP279-812380-A-301.dwg LAYOUT NAME: Layout1 PLOTTED: Saturday, August 11, 2012 - 2:26pm USER: MJACKSON