DESIGN BUILD REQUEST FOR PROPOSAL

PREPARED BY:
Naval Facilities Engineering Command, Southeast
Building 903 Yorktown Avenue, NAS Jacksonville, Florida 32212-0030

ISSUED FOR BID
October 28, 2015

PART SIX-B Attachments (Drawings)

BEQ A SCHOOL REPLACEMENT (NTTC)

(**N**aval **T**echnical **T**raining **C**enter)

NAS Pensacola (Corry Station)
Pensacola, Florida

Work Order #: 209174

FOR COMMANDER NAVFAC SE – BLTL:		Philip Dixon Jr., P.E.
PROJECT MANAGER:		Renee Dudgeon, P.E.
TECHNICAL BRANCH HEAD:		Emil Handzel, NCARB, CSI
Discipline	**Prepared By:**	**Reviewed By:**
Architectural:	Curtis M. Derrick, R.A.	William Skelley, R.A.
Interior Design:	Patty O'Neil, NCIDQ, LEED AP	William Skelley, R.A.
Structural:	Pamela Cowden, P.E.	Kurt Wittman, P.E.
Mechanical:	Todd Crane, P.E.	Stan Yekalis, P.E.
Electrical:	James B. Gunter, P.E.	Ramon H. Flores, P.E.
Fire Protection:	Matt Morse, P.E.	Taylor Hudson, P.E.
Civil:	William Swaney, P.E.	Jeffrey Frank, P.E.

PART SIX B – Items 1 thru 6 - Drawings (11x17):

B1. Topographical Survey (4 page)

B2. C-100 Conceptual Site Layout – (1 page) provided for information purposes only.

B3. Drawing 04 – Record Steam Lines (1 page not to scale) provide for information purposes only.

B4. Revised Survey – (1 pages) – Provided for information purposes only.

B5. Typical Telephone, Data and TV Wiring Plan – (1 page) – Provided for information purposes only.

B6. Existing Drawings of P-724 (Building 1094). – (204 pages) - Included for the Design Build team for reference only.

PART SIX B – Table of Contents
Items B1 thru B6 - Drawings (11x17):

PART SIX B1 – TOPOGRAPHIC SURVEY

PART SIX B1 – TOPOGRAPHIC SURVEY

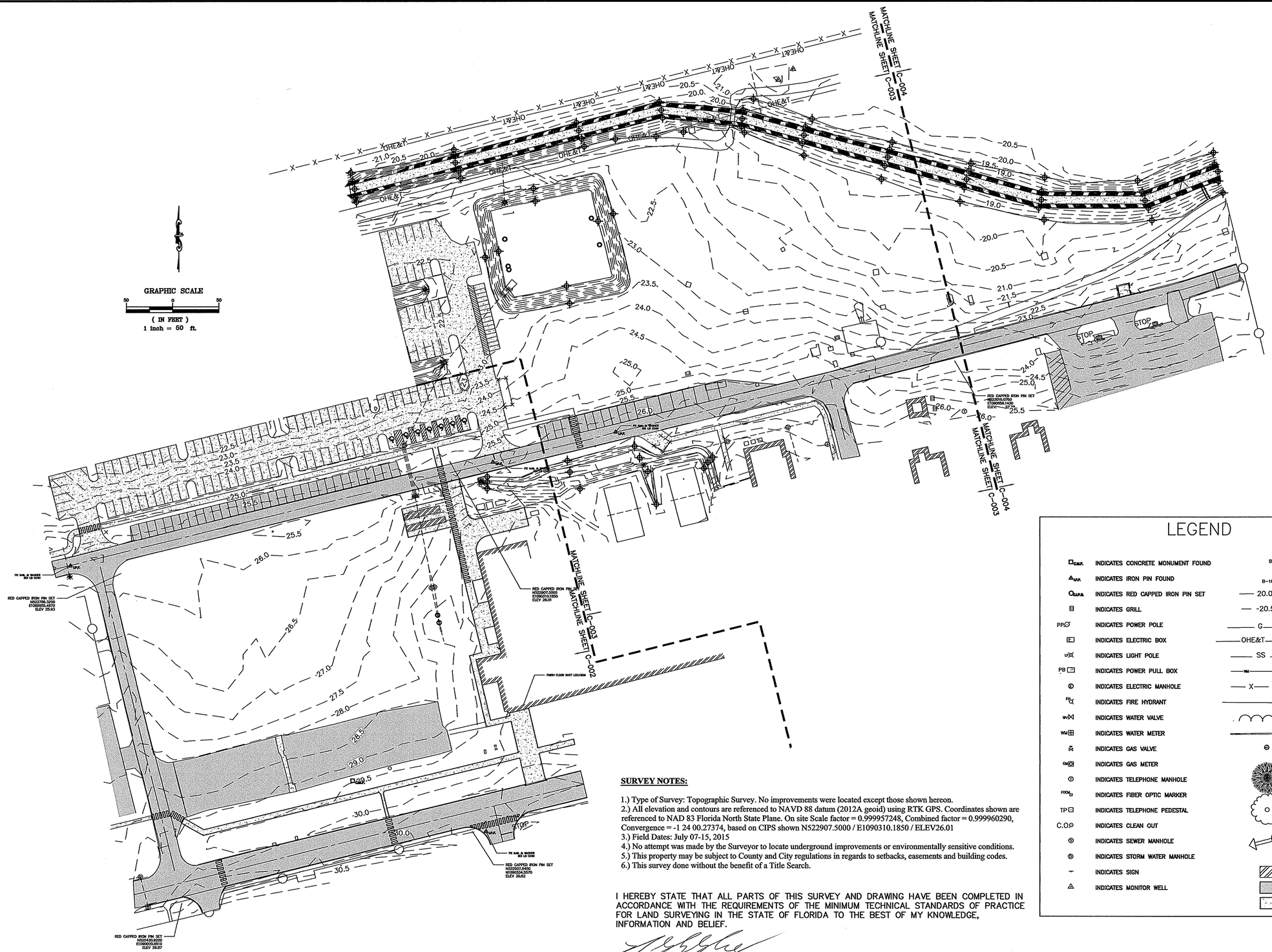

LEGEND

C.M.F.	INDICATES CONCRETE MONUMENT FOUND
I.P.F.	INDICATES IRON PIN FOUND
C.I.P.S.	INDICATES RED CAPPED IRON PIN SET
	INDICATES GRILL
PP	INDICATES POWER POLE
	INDICATES ELECTRIC BOX
LP	INDICATES LIGHT POLE
PB	INDICATES POWER PULL BOX
E	INDICATES ELECTRIC MANHOLE
FH	INDICATES FIRE HYDRANT
WV	INDICATES WATER VALVE
WM	INDICATES WATER METER
	INDICATES GAS VALVE
GM	INDICATES GAS METER
T	INDICATES TELEPHONE MANHOLE
FOCM	INDICATES FIBER OPTIC MARKER
TP	INDICATES TELEPHONE PEDESTAL
C.O.	INDICATES CLEAN OUT
S	INDICATES SEWER MANHOLE
D	INDICATES STORM WATER MANHOLE
	INDICATES SIGN
	INDICATES MONITOR WELL
BP	INDICATES BUMPER POST
B-10	INDICATES BORING LOCATION
20.0	INDICATES MAJOR CONTOURS
-20.5	INDICATES MINOR CONTOURS
G	INDICATES GAS LINE
OHE&T	INDICATES OVER HEAD POWER
SS	INDICATES SANITARY SEWER
WM	INDICATES WATER LINE
X	INDICATES FENCE
	INDICATES CHAIN LINK FENCE
	INDICATES TREE LINE
	INDICATES STREET & CURB
	INDICATES SHRUBS
	INDICATES PINE TREE
	INDICATES LEAFY TREE
1	INDICATES PHOTOGRAPH LOCATION AND DIRECTION
	INDICATES EXISTING BUILDING
	INDICATES ASPHALT PAVEMENT
	INDICATES CONCRETE PAVEMENT

SURVEY NOTES:

1.) Type of Survey: Topographic Survey. No improvements were located except those shown hereon.
2.) All elevation and contours are referenced to NAVD 88 datum (2012A geoid) using RTK GPS. Coordinates shown are referenced to NAD 83 Florida North State Plane. On site Scale factor = 0.999957248, Combined factor = 0.999960290, Convergence = -1 24 00.27374, based on CIPS shown N522907.5000 / E1090310.1850 / ELEV26.01
3.) Field Dates: July 07-15, 2015
4.) No attempt was made by the Surveyor to locate underground improvements or environmentally sensitive conditions.
5.) This property may be subject to County and City regulations in regards to setbacks, easements and building codes.
6.) This survey done without the benefit of a Title Search.

I HEREBY STATE THAT ALL PARTS OF THIS SURVEY AND DRAWING HAVE BEEN COMPLETED IN ACCORDANCE WITH THE REQUIREMENTS OF THE MINIMUM TECHNICAL STANDARDS OF PRACTICE FOR LAND SURVEYING IN THE STATE OF FLORIDA TO THE BEST OF MY KNOWLEDGE, INFORMATION AND BELIEF.

D.BRAD BUSBY FLORIDA LIC.#6701
DATE OF SURVEY JULY 31, 2015

MLS	STM	DESCRIPTION	DATE	APPR

NAVFAC

SEAL

Gulf Coast Architectural Group
2510 West Cervantes Street
Pensacola, Florida 32505
p 850.607.7328
www.gcarchgroup.com

A/E INFO

APPROVED

FOR COMMANDER NAVFAC / B.L.T.L

ACTIVITY

SATISFACTORY TO DATE

DES	DRW	CHK	DN

PROJECT MANAGER

IPT TEDL BRANCH HEAD

CHIEF ENG/ARCH (CORE)

DEPARTMENT OF THE NAVY
NAVAL FACILITIES ENGINEERING COMMAND SOUTHEAST
IPT GULF COAST
NAVAL FACILITIES ENGINEERING COMMAND
NAVAL AIR STATION JACKSONVILLE
NAVAL AIR STATION PENSACOLA
CORRY "A" SCHOOL BEQ P-723
FLORIDA

BEQ "A" SCHOOL TOPOGRAPHIC SURVEY

SCALE: AS SHOWN

EPROJECT NO.:

CONSTR. CONTR. NO.

NAVFAC DRAWING NO.

SHEET 1 OF 4

C-001

DRAWFORM REVISION: 7 AUGUST 2009

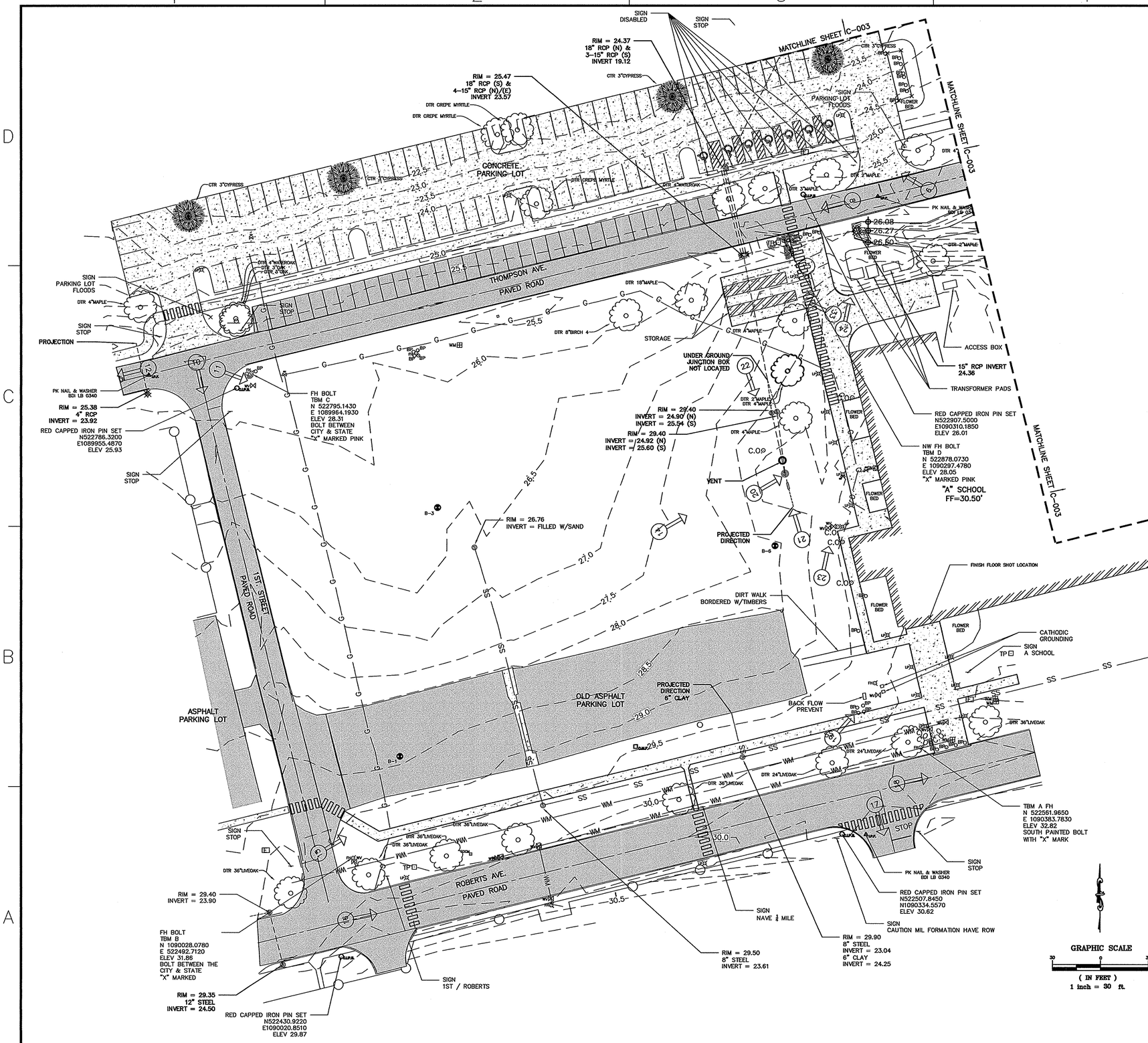

LEGEND

	INDICATES CONCRETE MONUMENT FOUND		INDICATES BUMPER POST
	INDICATES IRON PIN FOUND	B-10	INDICATES BORING LOCATION
	INDICATES RED CAPPED IRON PIN SET	20.0	INDICATES MAJOR CONTOURS
	INDICATES GRILL	-20.5	INDICATES MINOR CONTOURS
PP	INDICATES POWER POLE	G	INDICATES GAS LINE
E	INDICATES ELECTRIC BOX	OHE&T	INDICATES OVER HEAD POWER
LP	INDICATES LIGHT POLE	SS	INDICATES SANITARY SEWER
PB	INDICATES POWER PULL BOX	WM	INDICATES WATER LINE
	INDICATES ELECTRIC MANHOLE	X	INDICATES FENCE
FH	INDICATES FIRE HYDRANT		INDICATES CHAIN LINK FENCE
WV	INDICATES WATER VALVE		INDICATES TREE LINE
WM	INDICATES WATER METER		INDICATES STREET & CURB
	INDICATES GAS VALVE		INDICATES SHRUBS
GM	INDICATES GAS METER		INDICATES PINE TREE
T	INDICATES TELEPHONE MANHOLE		INDICATES LEAFY TREE
FOM	INDICATES FIBER OPTIC MARKER		INDICATES PHOTOGRAPH LOCATION AND DIRECTION
TP	INDICATES TELEPHONE PEDESTAL		INDICATES EXISTING BUILDING
C.O	INDICATES CLEAN OUT		INDICATES ASPHALT PAVEMENT
S	INDICATES SEWER MANHOLE		INDICATES CONCRETE PAVEMENT
D	INDICATES STORM WATER MANHOLE		
	INDICATES SIGN		
	INDICATES MONITOR WELL		

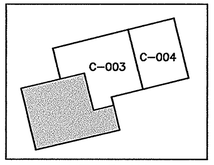

KEY PLAN
N.T.S.

SYM	DESCRIPTION	DATE	APPR

NAVFAC

SEAL

Gulf Coast Architectural Group
2510 West Cervantes Street
Pensacola, Florida 32505
p 850.607.7328
www.gcarchgroup.com

A/E INFO

APPROVED

FOR COMMANDER NAVFAC / B.L.T.L.

ACTIVITY

SATISFACTORY TO DATE

DES · DRW · CHK DN

PROJECT MANAGER

IPT TECH. BRANCH HEAD

CHIEF ENG/ARCH (CORE)

DEPARTMENT OF THE NAVY
NAVAL FACILITIES ENGINEERING COMMAND
IPT GULF COAST

NAVAL FACILITIES ENGINEERING COMMAND SOUTHEAST
NAVAL AIR STATION JACKSONVILLE

NAVAL AIR STATION PENSACOLA
CORRY "A" SCHOOL BEQ P-723
FLORIDA

BEQ "A" SCHOOL TOPOGRAPHIC SURVEY

SCALE: AS SHOWN

EPROJECT NO.:

CONSTR. CONTR. NO.

NAVFAC DRAWING NO.

SHEET 2 OF 4

C-002

DRAWFORM REVISION: 7 AUGUST 2009

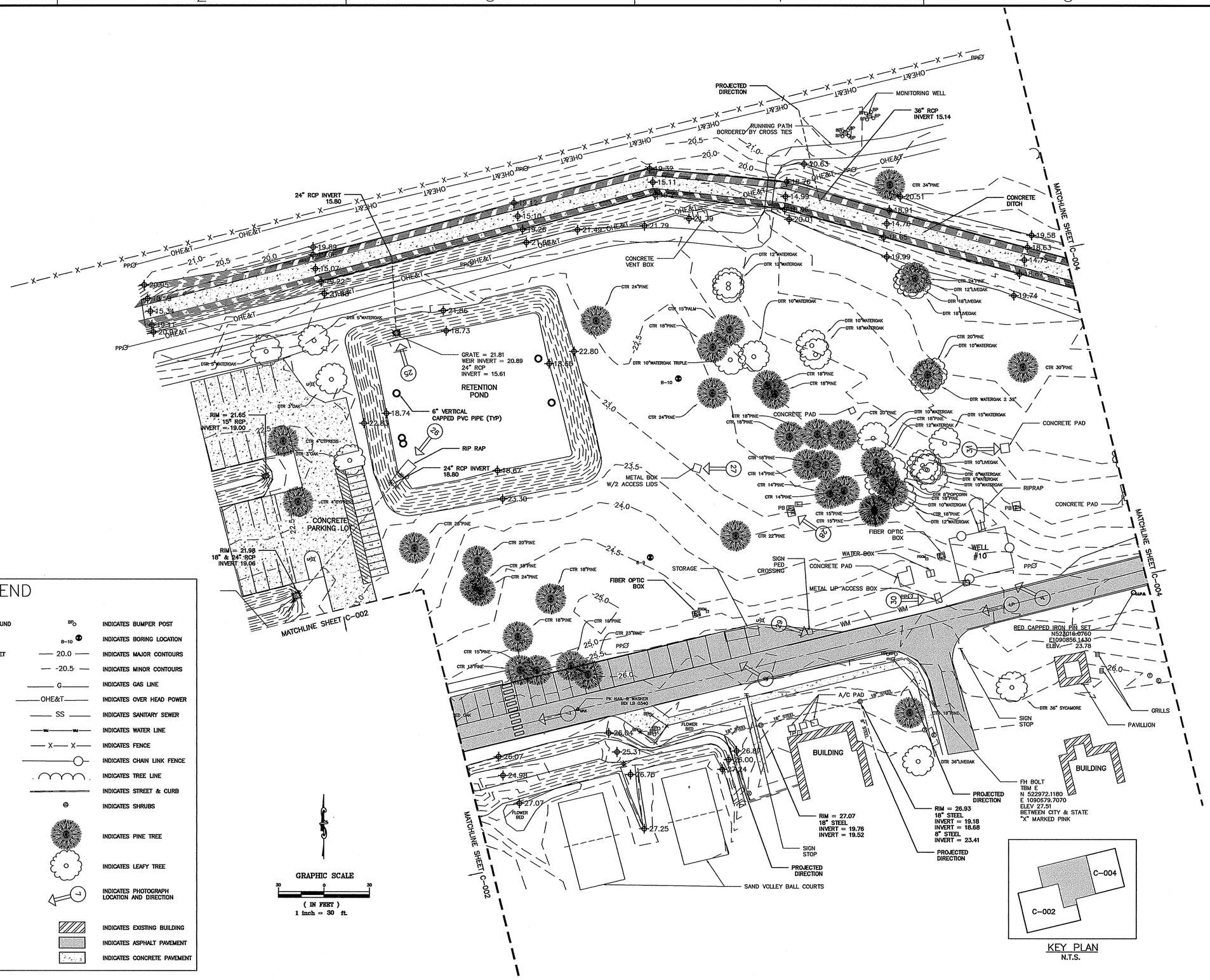

LEGEND

INDICATES CONCRETE MONUMENT FOUND	INDICATES BUMPER POST
INDICATES IRON PIN FOUND	INDICATES BORING LOCATION
INDICATES RED CAPPED IRON PIN SET	INDICATES MAJOR CONTOURS
INDICATES GRILL	INDICATES MINOR CONTOURS
INDICATES POWER POLE	INDICATES GAS LINE
INDICATES ELECTRIC BOX	INDICATES OVER HEAD POWER
INDICATES LIGHT POLE	INDICATES SANITARY SEWER
INDICATES POWER PULL BOX	INDICATES WATER LINE
INDICATES ELECTRIC MANHOLE	INDICATES FENCE
INDICATES FIRE HYDRANT	INDICATES CHAIN LINK FENCE
INDICATES WATER VALVE	INDICATES TREE LINE
INDICATES WATER METER	INDICATES STREET & CURB
INDICATES GAS VALVE	INDICATES SHRUBS
INDICATES GAS METER	INDICATES PINE TREE
INDICATES TELEPHONE MANHOLE	INDICATES LEAFY TREE
INDICATES FIBER OPTIC MARKER	INDICATES PHOTOGRAPH LOCATION AND DIRECTION
INDICATES TELEPHONE PEDESTAL	INDICATES EXISTING BUILDING
INDICATES CLEAN OUT	INDICATES ASPHALT PAVEMENT
INDICATES SEWER MANHOLE	INDICATES CONCRETE PAVEMENT
INDICATES STORM WATER MANHOLE	
INDICATES SIGN	
INDICATES MONITOR WELL	

KEY PLAN
N.T.S.

SYM	DESCRIPTION	DATE	APPR

NAVFAC

SEAL

Gulf Coast Architectural Group
2510 West Cervantes Street
Pensacola, Florida 32505
p 850.607.7328
www.gcarchgroup.com

A/E INFO

APPROVED

FOR COMMANDER NAVFAC / B.L.T.L.

ACTIVITY

SATISFACTORY TO DATE

DES | DRW | CHK DN

PROJECT MANAGER

IPT TECH. BRANCH HEAD

CHIEF ENG/ARCH (CORE)

DEPARTMENT OF THE NAVY
NAVAL FACILITIES ENGINEERING COMMAND
IPT GULF COAST
NAVAL FACILITIES ENGINEERING COMMAND SOUTHEAST
NAVAL AIR STATION JACKSONVILLE
FLORIDA
NAVAL AIR STATION PENSACOLA
CORRY "A" SCHOOL BEQ P-723
BEQ "A" SCHOOL TOPOGRAPHIC SURVEY

SCALE: AS SHOWN

EPROJECT NO.:

CONSTR. CONTR. NO.

NAVFAC DRAWING NO.

SHEET 3 OF 4

C-003

DRAWFORM REVISION: 7 AUGUST 2009

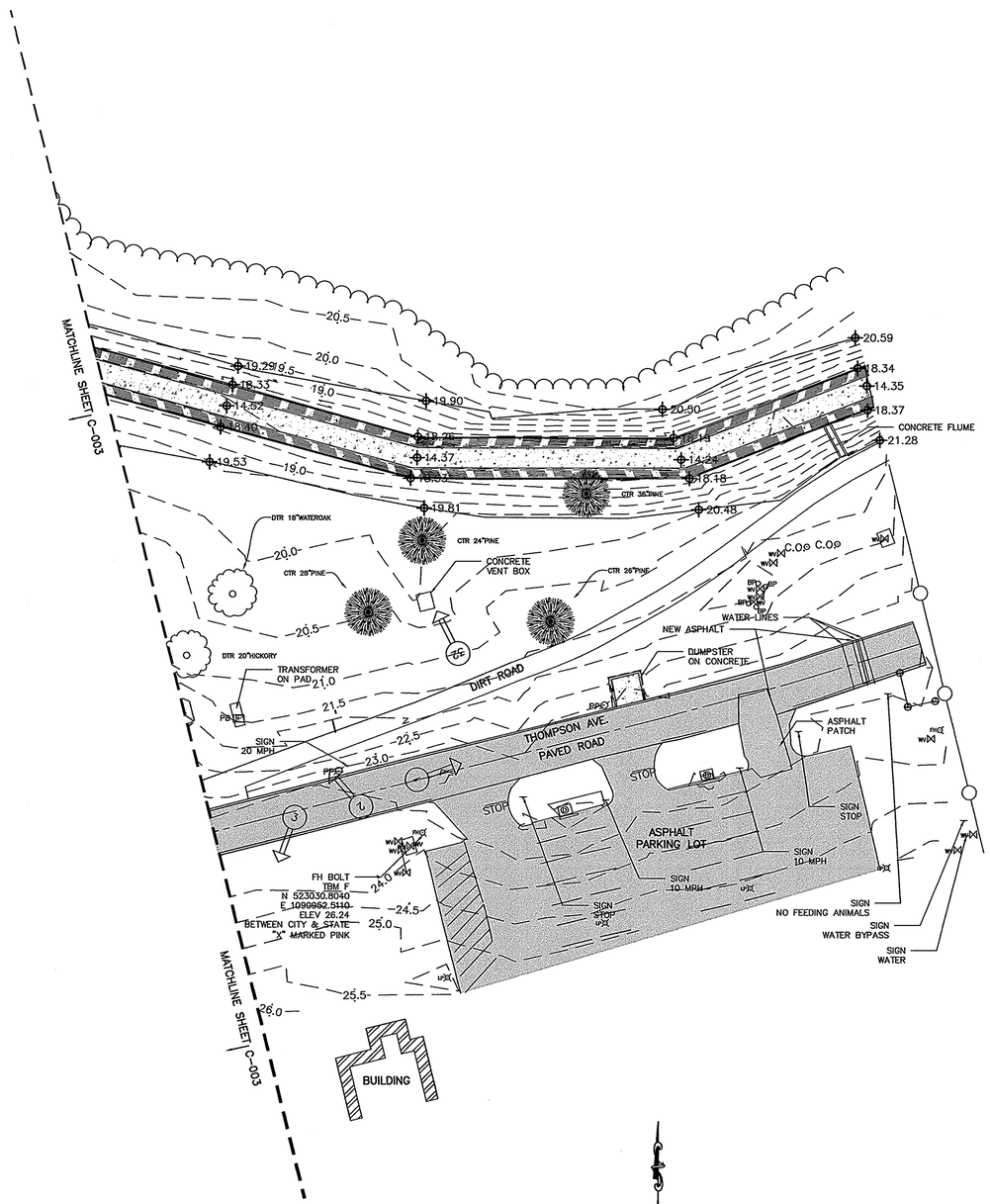

GRAPHIC SCALE

30 0 30

(IN FEET)
1 inch = 30 ft.

LEGEND

C.M.F.	INDICATES CONCRETE MONUMENT FOUND	BP	INDICATES BUMPER POST
I.P.F.	INDICATES IRON PIN FOUND	B-10	INDICATES BORING LOCATION
I.R.P.S.	INDICATES RED CAPPED IRON PIN SET	20.0	INDICATES MAJOR CONTOURS
	INDICATES GRILL	-20.5	INDICATES MINOR CONTOURS
PP	INDICATES POWER POLE	G	INDICATES GAS LINE
E	INDICATES ELECTRIC BOX	OHE&T	INDICATES OVER HEAD POWER
LP	INDICATES LIGHT POLE	SS	INDICATES SANITARY SEWER
PB	INDICATES POWER PULL BOX	WM	INDICATES WATER LINE
E	INDICATES ELECTRIC MANHOLE	X	INDICATES FENCE
FH	INDICATES FIRE HYDRANT		INDICATES CHAIN LINK FENCE
WV	INDICATES WATER VALVE		INDICATES TREE LINE
WM	INDICATES WATER METER		INDICATES STREET & CURB
GV	INDICATES GAS VALVE		INDICATES SHRUBS
GM	INDICATES GAS METER		INDICATES PINE TREE
T	INDICATES TELEPHONE MANHOLE		INDICATES LEAFY TREE
FOCM	INDICATES FIBER OPTIC MARKER		INDICATES PHOTOGRAPH LOCATION AND DIRECTION
TP	INDICATES TELEPHONE PEDESTAL		INDICATES EXISTING BUILDING
C.O	INDICATES CLEAN OUT		INDICATES ASPHALT PAVEMENT
S	INDICATES SEWER MANHOLE		INDICATES CONCRETE PAVEMENT
D	INDICATES STORM WATER MANHOLE		
	INDICATES SIGN		
	INDICATES MONITOR WELL		

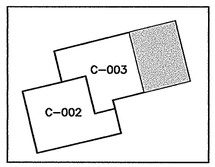

KEY PLAN
N.T.S.

SYM	DESCRIPTION	DATE	APPR

NAVFAC

SEAL

Gulf Coast Architectural Group
2510 West Cervantes Street
Pensacola, Florida 32505
p 850.607.7328
www.gcarchgroup.com

A/E INFO

APPROVED

FOR COMMANDER NAVFAC / B.L.T.L.

ACTIVITY

SATISFACTORY TO DATE

DES | DRW | CHK DN

PROJECT MANAGER

IPT TECH. BRANCH HEAD

CHIEF ENG/ARCH (CORE)

DEPARTMENT OF THE NAVY
NAVAL FACILITIES ENGINEERING COMMAND
IPT GULF COAST
NAVAL FACILITIES ENGINEERING COMMAND SOUTHEAST
NAVAL AIR STATION JACKSONVILLE
NAVAL AIR STATION PENSACOLA
CORRY "A" SCHOOL BEQ P-723
FLORIDA

BEQ "A" SCHOOL TOPOGRAPHIC SURVEY

SCALE: AS SHOWN

EPROJECT NO.:

CONSTR. CONTR. NO.

NAVFAC DRAWING NO.

SHEET 4 OF 4

C-004

DRAWFORM REVISION: 7 AUGUST 2009

PART SIX B2 - CONCEPTUAL SITE LAYOUT

PART SIX B2 - CONCEPTUAL SITE LAYOUT

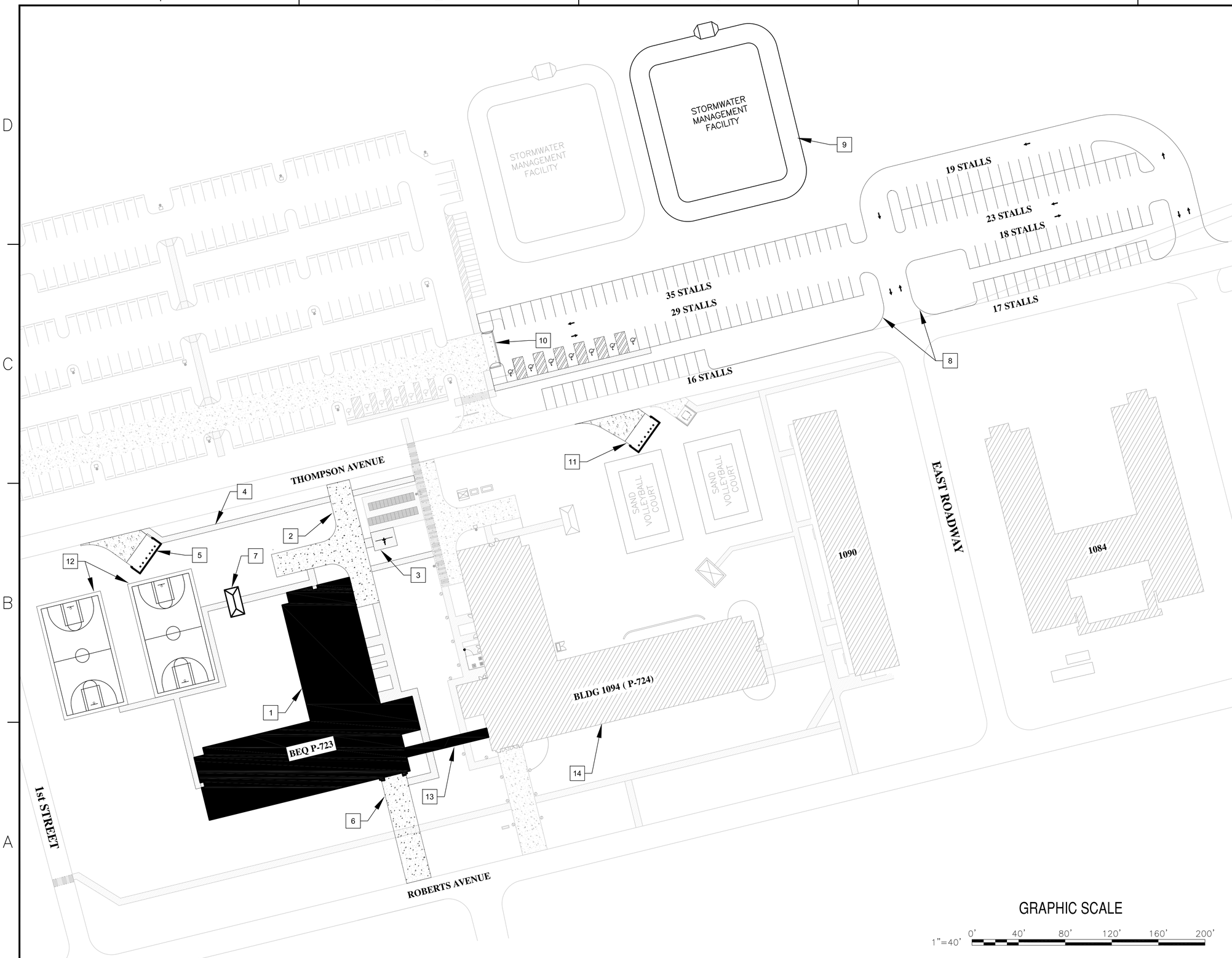

KEY NOTES

1. BEQ BUILDING
2. FIRE LANE/ACCESS DRIVE
3. BICYCLE RACK AND SLAB (14 BICYCLES)
4. SITE SIDEWALKS. TYP.
5. DUMPSTERS
6. MAIN ENTRANCE/FIRE LANE
7. PAVILION
8. PARKING FOR MINIMUM 137 VEHICLES & 13 MOTORCYCLES
9. STORMWATER MANAGEMENT FACILITY
10. DEMO/RELOCATE DUMPSTER. SEE KEY NOTE 11
11. POSSIBLE LOCATION OF RELOCATED DUMPSTER
12. BASKETBALL COURTS
13. COVERED WALKWAY SYSTEM
14. EXISTING BEQ TO REMAIN (BLDG 1094, P-724)

NOTES:
1. THIS PLAN IS CONCEPTUAL ONLY; THE DESIGNER OF RECORD (DOR) IS RESPONSIBLE FOR PROPERLY DESIGNING THE FACILITIES AND SITE IN ORDER TO SAFELY AND EFFICIENTLY ACCOMMODATE THE REQUIREMENTS OF THIS RFP. THE DOR SHALL FULLY INTEGRATE ALL ATFP STANDOFF DISTANCE REQUIREMENTS FOR EXISTING FACILITIES AND SITE DEVELOPMENT FACILITIES.

SYM	DESCRIPTION	DATE	APPR

NAVFAC

SEAL

A/E INFO

ACCEPTED

FOR COMMANDER NAVFAC

ACTIVITY

SATISFACTORY TO DATE

DES · DRW DM CHK ·

PROJECT MANAGER ·

IPT TECH. BRANCH HEAD ·

CHIEF ENG/ARCH (CORE) ·

DEPARTMENT OF THE NAVY
NAVAL FACILITIES ENGINEERING COMMAND
IPT GULF COAST
NAVAL FACILITIES ENGINEERING COMMAND SOUTHEAST
NAVAL AIR STATION JACKSONVILLE
CORRY STATION
PENSACOLA, FLORIDA

P-723 BEQ A SCHOOL REPLACEMENT

CONCEPTUAL SITE LAYOUT

SCALE: GRAPHIC

EPROJECT NO.: ·

CONSTR. CONTR. NO.
N69450-xx-C-xxxx

NAVFAC DRAWING NO.
·

SHEET 1 OF 1

C-100

DRAWFORM REVISION: 4 APRIL 2012

FILE NAME: P:\CIBL\Project_Files\FLORIDA\WAS PENSACOLA FL(H)N00204\723-BEQ A SCHOOL REPL (NTTC)-209174\Working Technical Files\CIVIL\ConceptualConceptual Site (9 Jun 15).dwg LAYOUT NAME: C-100 PLOTTED: Thursday, June 11, 2015 - 8:40am USER: david.melendez

PART SIX B3 – RECORD STEAM LINES

PART SIX B3 – RECORD STEAM LINES

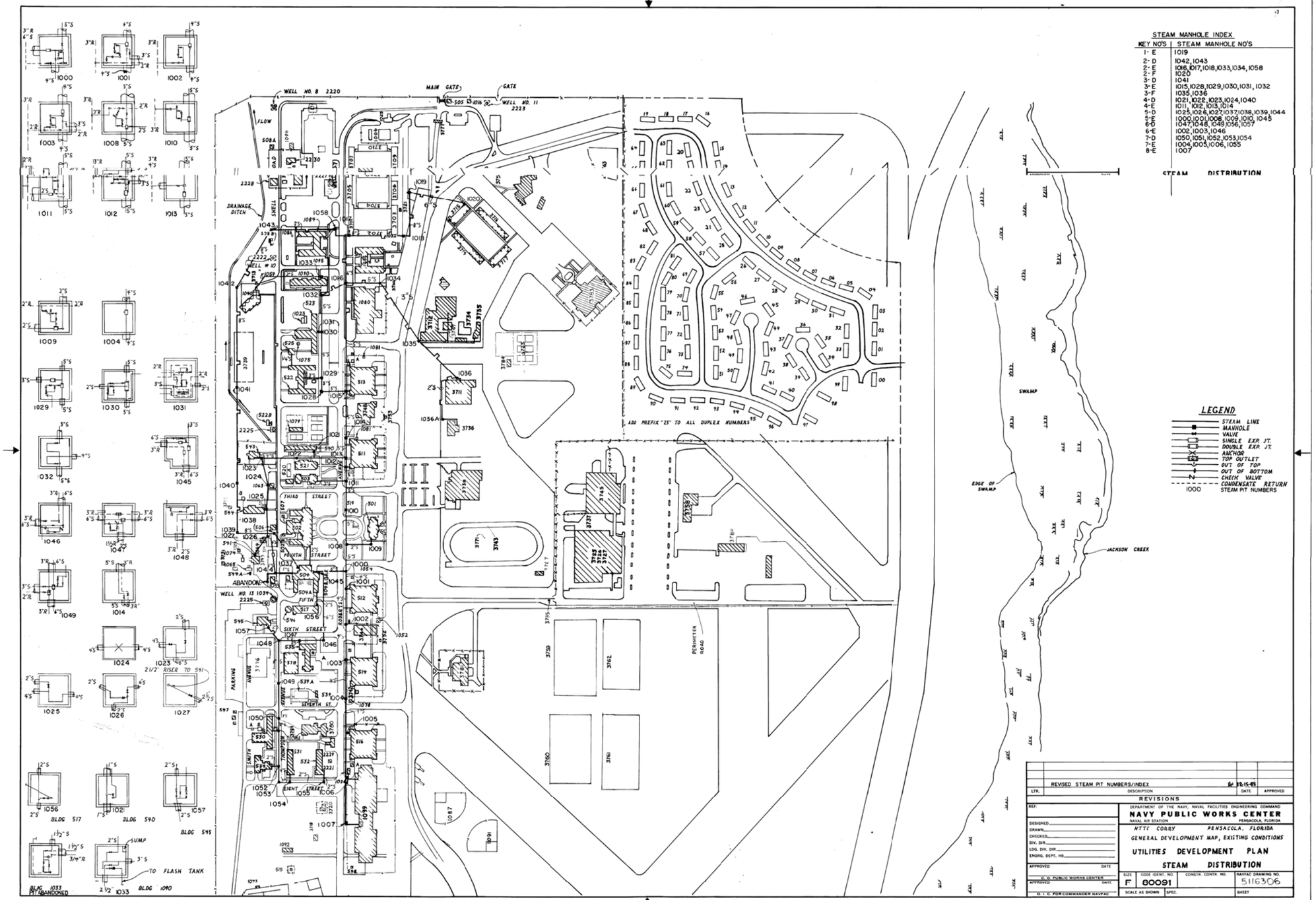

STEAM MANHOLE INDEX

KEY NO'S	STEAM MANHOLE NO'S
1- E	1019
2- D	1042, 1043
2- E	1016, 1017, 1018, 1033, 1034, 1058
2- F	1020
3- D	1041
3- E	1015, 1028, 1029, 1030, 1031, 1032
3- F	1035, 1036
4- D	1021, 1022, 1023, 1024, 1040
4- E	1011, 1012, 1013, 1014
5- D	1025, 1026, 1027, 1037, 1038, 1039, 1044
5- E	1000, 1001, 1008, 1009, 1010, 1045
6- D	1047, 1048, 1049, 1056, 1057
6- E	1002, 1003, 1046
7- D	1050, 1051, 1052, 1053, 1054
7- E	1004, 1005, 1006, 1055
8- E	1007

STEAM DISTRIBUTION

LEGEND

- STEAM LINE
- MANHOLE
- VALVE
- SINGLE EXP. JT.
- DOUBLE EXP. JT.
- ANCHOR
- TOP OUTLET
- OUT OF TOP
- OUT OF BOTTOM
- CHECK VALVE
- CONDENSATE RETURN
- 1000 STEAM PIT NUMBERS

LTR.	DESCRIPTION	DATE	APPROVED
	REVISED STEAM PIT NUMBERS/INDEX	12-15-09	

REVISIONS

REF:

DESIGNED
DRAWN
CHECKED
DIV. DIR.
LDG. DIV. DIR.
ENGRG. DEPT. HD.
APPROVED DATE
C.O. PUBLIC WORKS CENTER
APPROVED DATE
O. I. C. FOR COMMANDER NAVFAC

DEPARTMENT OF THE NAVY, NAVAL FACILITIES ENGINEERING COMMAND
NAVY PUBLIC WORKS CENTER
NAVAL AIR STATION PENSACOLA, FLORIDA
NTTC CORRY PENSACOLA, FLORIDA
GENERAL DEVELOPMENT MAP, EXISTING CONDITIONS
UTILITIES DEVELOPMENT PLAN
STEAM DISTRIBUTION

SIZE	CODE IDENT. NO.	CONSTR. CONTR. NO.	NAVFAC DRAWING NO.
F	80091		5116306
SCALE AS SHOWN	SPEC.		SHEET

NOT TO SCALE

		APPR
		DATE
		DESCRIPTION
		SYM

NAVFAC

Mason & Hanger
A Day & Zimmermann Company

SEAL

APPROVED

FOR COMMANDER NAVFAC

ACTIVITY

SATISFACTORY TO DATE

NAVAL FACILITIES ENGINEERING COMMAND

DEPARTMENT OF THE NAVY

NAS PENSACOLA

PENSACOLA, FLORIDA

BUILDING 724 Corry "A" School BEQ

RECORD STEAM LINES

SCALE:

EPROJECT NO.:

CONSTR. CONTR. NO.

NAVFAC DRAWING NO.

SHEET OF

04

DRAWFORM REVISION: 6 APRIL 2009

PART SIX B4 - REVISED SURVEY

PART SIX B4 - REVISED SURVEY

PROVIDED FOR INFORMATION PURPOSE ONLY

TOPOGRAPHIC SURVEY
CORRY "A" SCHOOL BEQ P724
PROPOSED BEQ SITE
CORRY STATION
PENSACOLA
ESCAMBIA COUNTY, FLORIDA

THIS SURVEY WAS REVISED ON MAY 24, 2012.
ALL THE ELEVATIONS AND THE CONTOUR LINES WERE RAISED BY ONE FOOT.

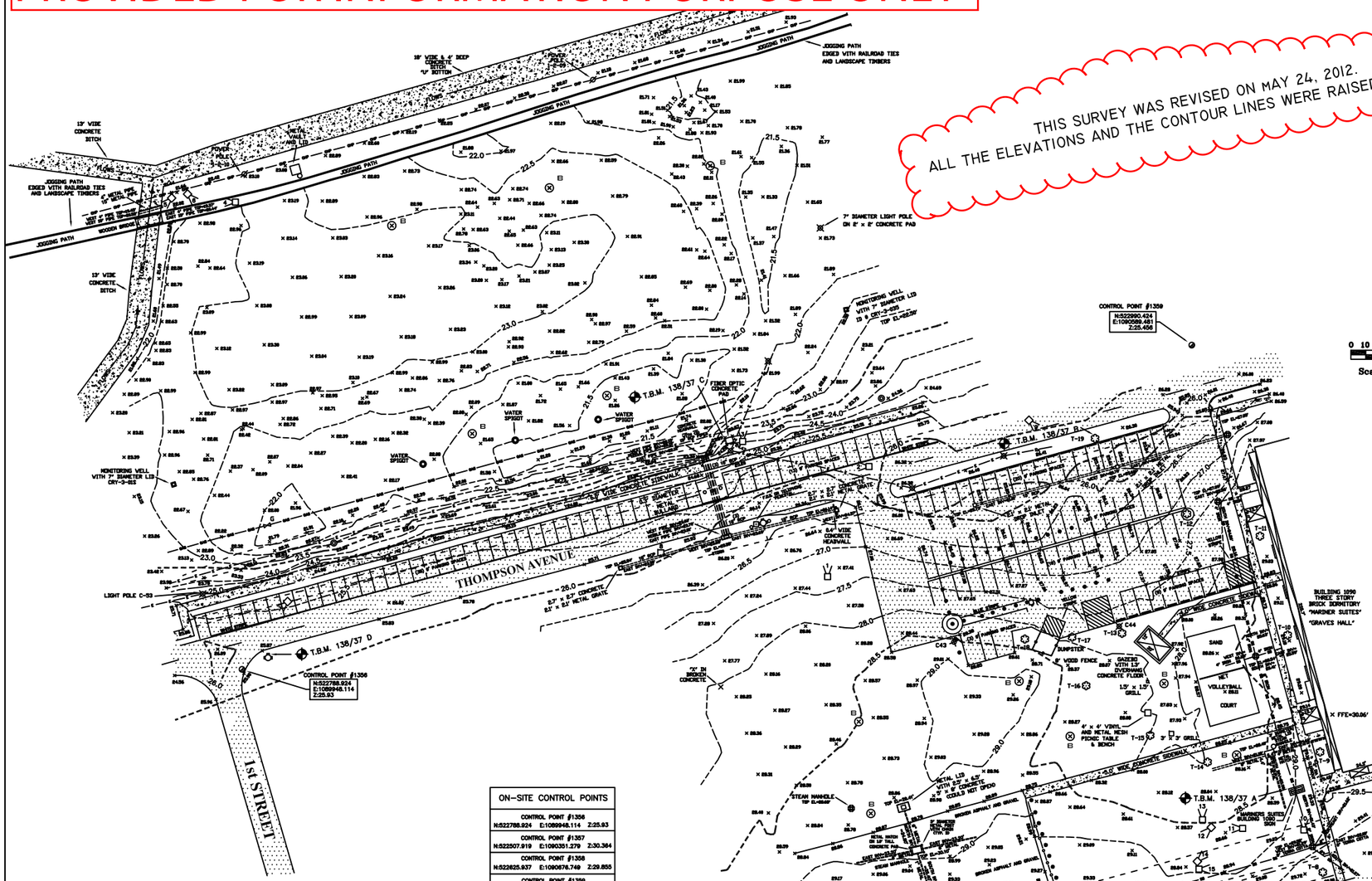

Scale: 1" = 40'

LEGEND

DIA	DIAMETER IN INCHES
EL.	ELEVATION
INV	INVERT
RCP	REINFORCED CONCRETE PIPE
T.B.M.	TEMPORARY BENCH MARK
	CONCRETE
	ASPHALT
T-1	TREE - SEE TREE TABLE FOR SIZE AND TYPE
	WATER SPIGOT
	WATER VALVE
	BACKFLOW PREVENTER PEDESTAL
	SOIL BORING LOCATION WITH NO ID NUMBER
	BURIED FIBER OPTIC - SIGN POST
	FIRE HYDRANT
	7' DIAMETER LIGHT POLE ON 2' x 2' CONCRETE PAD
	POWER POLE
FFE	FINISHED FLOOR ELEVATION
	MANHOLE
G V	VALVE; (V)WATER, (G)GAS
	6.8' x 0.7' CONCRETE WHEEL STOP
	LANDSCAPING SHRUBBERY
	CAMERA LOCATION AND VIEW - SEE PHOTO LEGEND
OHP OHP	OVERHEAD UTILITY WIRES - THREE (3) LINES
	BURIED FIBER OPTIC CABLE
E E	CENTERLINE BURIED ELECTRIC LINES (3 LINES)
S S	SEWER LINE
	WATER LINE
GAS GAS	NATURAL GAS LINE
	3' TALL WOOD RAIL FENCE
25	MAJOR CONTOUR LINE WITH ELEVATION (IN FEET)
25.5	MINOR CONTOUR LINE WITH ELEVATION (IN FEET)
28.89 ×	SPOT ELEVATION (IN FEET)
T.B.M.	T.B.M. - (SEE SURVEYOR'S REPORT FOR DETAILS)
	1.4' DIAMETER CONCRETE WITH 2' IRON PIPE (FLUSH)
	CONTROL POINT - 1/2" YELLOW CAPPED IRON ROD - ELSI #6993

SURVEYOR'S REPORT:

1. ELEVATION FOR TEMPORARY BENCHMARKS AND TOPOGRAPHIC SURVEY REFERENCED TO BRONZE DISK AT THE MAIN ENTRANCE TO NAS CORRY FIELD, IN THE EAST WALL OF BRICK SENTRY BUILDING, 24 FEET SOUTH OF THE CENTERLINE OF THE ENTRANCE ROAD, AND ABOUT 4 FEET ABOVE THE GROUND. DISK STAMPED "H 111, 1945." ELEVATION 35.35' NORTH AMERICAN VERTICAL DATUM OF 1988 (NAVD 88).

2. BENCHMARKS (B.M.):
   A. T.B.M. 138/37 A "X" CUT ON THE NORTHWEST CORNER OF A 3.0' x 8.0' CONCRETE BUILDING SIGN PAD. (MARINER'S SUITES, BUILDING 1090). SIGN IS LOCATED ±36 FEET WEST OF THE SOUTHWEST CORNER OF BUILDING 1090. ELEVATION: 29.32' (NAVD 88).
   B. T.B.M. 138/37 B IS A COTTON SPINDLE SET IN THE SOUTH SIDE OF A 22" PINE TREE LOCATED ±7.0 FEET SOUTH OF THE SOUTH EDGE OF PAVEMENT OF THOMPSON AVENUE AND ±55 FEET FROM THE WESTERN SIDE OF THE NORTH ENTRANCE INTO BUILDING 1090 PARKING LOT AND ±3.0 FEET NORTH OF THE NORTH EDGE OF THE PARKING LOT. ELEVATION: 27.70' (NAVD 88).
   C. T.B.M. 138/37 C THE NORTHWEST CORNER OF A NEW CONCRETE FIBER OPTICS BOX, 5.0' x 4.0', LOCATED ON THE SOUTHSIDE OF THE PROPOSED BEQ SITE, ±8.0 FEET NORTH OF THE NORTH EDGE OF THE SIDEWALK AND ±5.0 FEET NORTH OF A LAMP POST MARKED "# C-52". ELEVATION: 24.85' (NAVD 88).
   D. T.B.M. 138/37 D THE NORTH BONNETT BOLT OF A YELLOW FIRE HYDRANT MARKED "D - 4 - 7", LOCATED ±5.0 FEET SOUTH OF THE SOUTH EDGE OF PAVEMENT OF THOMPSON AVENUE AND ±13 FEET EAST OF THE EDGE OF PAVEMENT OF 1st STREET. ELEVATION: 28.32' (NAVD 88).

3. THE UNDERGROUND UTILITIES SHOWN HAVE BEEN LOCATED FROM FIELD SURVEY INFORMATION AND EXISTING DRAWINGS. THE SURVEYOR HAS NOT PHYSICALLY LOCATED THE UNDERGROUND UTILITIES. THE SURVEYOR DOES NOT CERTIFY THAT THE UNDERGROUND UTILITIES SHOWN ARE IN THE EXACT LOCATION AS INDICATED, OR THE UNDERGROUND UTILITIES COMPRISE ALL SUCH UTILITIES.

4. THIS SURVEY DOES NOT REFLECT OR DETERMINE OWNERSHIP.

5. TO ASSURE THE CONTRACTOR IS ON THE SAME VERTICAL AND HORIZONTAL DATUM AS THIS SURVEY, IT IS STRONGLY RECOMMENDED THAT VERTICAL CHECKS BE MADE BETWEEN TWO BENCH MARKS AND THAT HORIZONTAL CHECKS BE MADE BETWEEN THREE CONTROL POINTS OR PROPERTY CORNERS.

6. CALL SUNSHINE ONE UTILITY LOCATERS AT (800) 432-4770 BEFORE DIGGING.

7. BURIED UTILITIES WERE GROUND SPOTTED BY N.A.S. PENSACOLA PUBLIC WORKS DEPARTMENT. BOB NICHOLS, PHONE (850) 452-5525 (EXT. 3339).

8. NO FIBER OPTICS WERE LOCATED.

9. STATE PLANE COORDINATES ARE REFERENCED TO ESC 4114, ESC 4113 & ESC 4112. NORTH AMERICAN DATUM 1983 (NAD 83).

UTILITY COMPANIES:
UTILITY INFORMATION FURNISHED BY:

NATURAL GAS – ENERGY SERVICES OF PENSACOLA (E.S.P.)
1625 ATWOOD DRIVE, PENSACOLA, FLORIDA 32514
(850) 474 5317

ELECTRIC – GULF POWER COMPANY
9220 PINE FOREST ROAD, PENSACOLA, FLORIDA 32534
(850) 429-2611

SANITARY SEWER & WATER – ESCAMBIA COUNTY UTILITY AUTHORITY
ELLISON INDUSTRIAL PARK, PENSACOLA, FLORIDA 32504
(850) 969-3310

ON-SITE CONTROL POINTS
CONTROL POINT #1356 N:522788.924 E:1089948.114 Z:25.93
CONTROL POINT #1357 N:522507.919 E:1090351.279 Z:30.364
CONTROL POINT #1358 N:522825.937 E:1090676.749 Z:29.855
CONTROL POINT #1359 N:522990.424 E:1090589.481 Z:25.456

THIS SURVEY WAS REVISED ON MAY 24, 2012.
ALL THE ELEVATIONS AND THE CONTOUR LINES WERE RAISED BY ONE FOOT.

THE UNDERSIGNED CLIENT(S) ACKNOWLEDGE RECEIPT AND ACCEPTANCE OF THIS SURVEY:

SIGNATURE *SIGNATURE*

TYPED OR PRINTED NAME *TYPED OR PRINTED NAME*

THE PURPOSE OF THIS SURVEY IS FOR TOPOGRAPHICAL DETAILS.
THIS MAP IS CERTIFIED AS MEETING THE FLORIDA MINIMUM TECHNICAL STANDARDS TO THE FOLLOWING AND IS FOR THE BENEFIT OF ONLY THE FOLLOWING LISTED CLIENT(S), AGENT(S) AND COMPANIES:

MASON & HANGER GROUP, INC.
UNITED STATES NAVY

EMPIRE LAND SURVEYING, INC.
PROFESSIONAL LAND SURVEYING ◆ SERVING NORTHWEST FLORIDA
8720 N. PALAFOX STREET, PENSACOLA, FLORIDA 32534
PHONE: 850-477-3745--FAX: 850-477-3705
LICENSED BUSINESS #6993, STATE OF FLORIDA

OFF SITE STATE PLANE CO-ORDINATE REFERENCE MARKERS	
CONCRETE MONUMENT & DISK ESC 4112	N:518342.600 E:1102572.140 Z:11.745
CONCRETE MONUMENT & DISK ESC 4113	N:513268.460 E:1083491.870 Z:19.780

PHOTO LEGEND

PHOTO NUMBER	LOCATION AND POSITION
1	FACING NORTH: NORTH BEQ SITE, THOMPSON AVENUE
2	FACING WEST: NORTH BEQ SITE, THOMPSON AVENUE
3	FACING NORTH: NORTH BEQ SITE TBM 138/37C
4	FACING WEST: NORTH BEQ SITE JOGGING PATH AND DITCH
5	FACING SOUTHWEST: NORTH BEQ SITE
6	FACING SOUTHEAST: NORTH BEQ SITE AND BUILDING 1090
7	FACING SOUTHWEST: THOMPSON AVENUE AND 1st STREET FIRE HYDRANT TBM 138/37A
8	FACING EAST: SOUTH SITE BUILDING 1090 AND PARKING LOT
9	FACING SOUTHEAST: SOUTH SITE BUILDING 1090 TBM 138/37A
10	FACING NORTH: SOUTH SITE BUILDING 1090
11	FACING WEST: SOUTH SITE PARKING LOT
12	FACING SOUTHWEST: SOUTH SITE
13	FACING NORTH: SOUTH SITE, FRONT OF BUILDING 1090
14	FACING NORTHEAST: BUILDING 1090
15	FACING EAST: SOUTH SIDE BUILDING 1090
16	FACING WEST: NORTH SIDE ROAD

TREE DATA TABLE

TREE NUMBER	DIAMETER (IN INCHES)	TREE TYPE
T-1	23"	LIVE OAK
T-2	23"	LIVE OAK
T-3	20"	LIVE OAK
T-4	20"	LIVE OAK
T-5	20"	LIVE OAK
T-6	20"	LIVE OAK
T-7	24"	LIVE OAK
T-8	24"	LIVE OAK
T-9	18"	PALM
T-10	18"	PALM
T-11	18"	LIVE OAK
T-12	18"	PINE
T-13	18"	LAUREL OAK
T-14	18"	PINE
T-15	18"	LAUREL OAK
T-16	48"	LIVE OAK
T-17	18"	PINE
T-18	18"	PINE
T-19	22"	PINE (TBM 138/37B)

JULY 29, 2009
MAY 24, 2012

LELAND M. EMPIE, P.S.M.

PROFESSIONAL SURVEYOR AND MAPPER, NO. 5766, STATE OF FLORIDA DATE

NOT VALID WITHOUT THE ORIGINAL BLUE SIGNATURE AND THE ORIGINAL RAISED SEAL OF A FLORIDA LICENSED SURVEYOR AND MAPPER

SCALE: 1"= 40'
FIELD DATE: 07/15/09
ORDER NO: 112-09-2
FIELD BOOK: 138/38-42
152/22-23
AND GPS

Mason & Hanger
A Day & Zimmermann Company

DESIGNER: XXX
DRAWN BY: XXX
WORK NUMBER: XXX
PROJECT LEADER: XXX
SUBMITTED BY: MASON AND HANGER
MANAGER TECHNICAL LEAD: XXX
F.P.E. :

DRAWING REVISIONS

REV.	DESCRIPTION	PREP. BY	DATE	APPRVD.

NAS PENSACOLA
PENSACOLA, FLORIDA
BUILDING 724 Corry "A" School BEQ
SHEET TITLE
DATE: AUGUST, 2009
ED FOR COMMANDER, NAVFAC
APPROVED

NAVFAC
Naval Facilities Engineering Command
NAVFAC Southeast

RECORD DRAWING DATE XX-XXX-20XX
CODE I.D. NO. 80091
DRAWING SIZE: X
SPEC. NO.06-
CONSTRN. CONTR. NO. SIZE
NAVFAC DRAWING NO. XXXXXXXX
SHEET XX OF XX
X-XXX

PART SIX B5 - TYPICAL TELEPHONE, DATA AND TV WIRING PLAN

PART SIX B5 - TYPICAL TELEPHONE, DATA AND TV WIRING PLAN

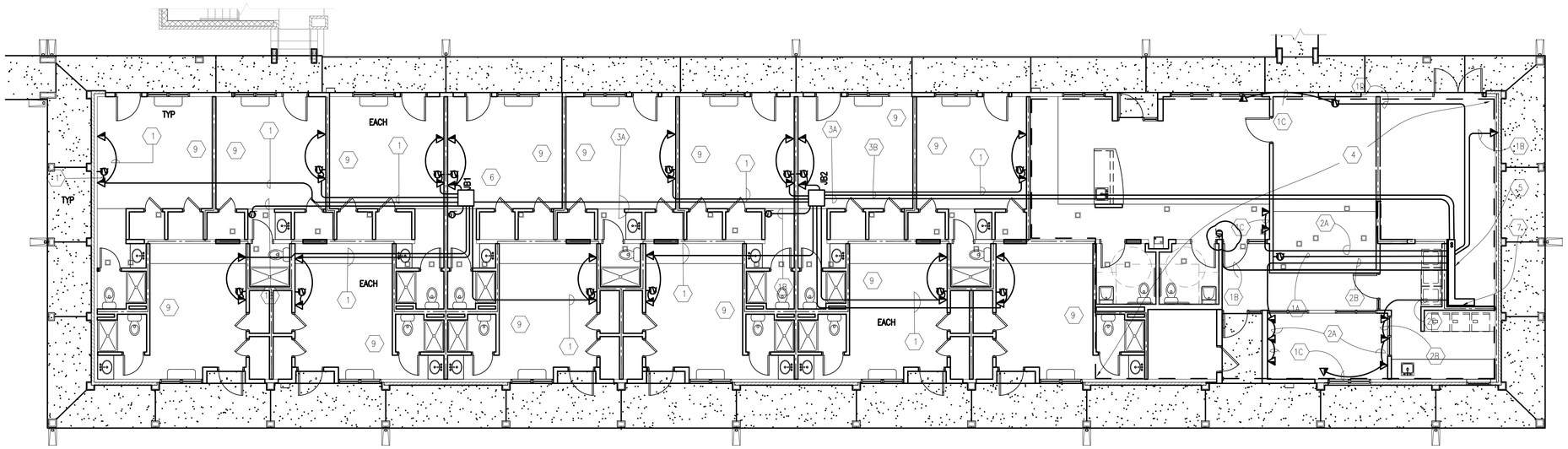

1 FIRST FLOOR TEL-DATA-TV WIRING
Scale: 1/8" = 1'-0"

GENERAL NOTES

1. PROVIDE SYSTEM OF CONDUITS AND PULL BOXES FOR FUTURE INSTALLATION OF TEL-DATA-TV CABLES AS SHOWN. ONLY ACTIVE OUTLETS SHALL HAVE CABLE AND TERMINATIONS. ALL FUTURE OUTLETS SHALL HAVE A BLANK COVER TO MATCH OTHER NEW DEVICES AND COVERS. CONDUITS ARE SIZED FOR FUTURE CABLES.
2. SPLICES ARE NOT ALLOWED.
3. MAXIMUM PULL DISTANCE IS 100'.
4. MAXIMUM PULLING TENSION IS 1000 LBS.
5. TAG ALL WIRES FROM EACH RESIDENCE AT EACH JUNCTION BOX AND AT BACKBOARD. DO NOT BUNDLE WIRES IN CONDUITS. MAKE SURE TAGS ARE VISIBLE.
6. LEAVE SUFFICIENT SLACK AT EACH JUNCTION BOX TO FACILITATE TROUBLE SHOOTING AND MAINTENANCE IF NECESSARY.
7. SEE FLOOR PLANS FOR ACTUAL COUNT AND LOCATION OF DEVICES.
8. ALL EMPTY CONDUIT SHALL HAVE A PULL LINE INSTALLED AND TAGGED.

REFERENCED NOTES

1	1"C. ONLY
1A	1-RG6, 1"C
1B	1-CAT6, 1"C.
1C	2-CAT6, 1"C.
1D	2-CAT6, 1-RG6, 1"C
2	NOT USED
2A	4-CAT6, 1"C.
2B	6-CAT6, 1"C.
2C	8-CAT6, 1"C.
2D	4-CAT6, 1-RG6, 1"C
3A	2-CAT6, 2 1/2"C.
3B	1-CAT6, 2 1/2"C.
4	ALL TELEPHONE AND DATA LOCATIONS IN THIS AREA ON 2ND AND 1ST FLOORS TO BE DIRECT PIPED THE THE BACKBOARD. ADD ADDITIONAL JUNCTION BOX FOR OUTLETS ON THE THIRD FLOOR AND PIPE TO 2ND FLOOR BACKBOARD.
5	TELEPHONE AND DATA BACKBOARD LOCATION. SEE UTILITY ROOM LAYOUTS
6	JUNCTION BOXES SHALL HAVE A HINGED COVER WITH KEYED LOCKS. BOX SHALL BE SUITABLE FOR RECESSED MOUNTING AND SHALL EXTEND NO MORE THAN 1/4" BELOW THE FINISHED CEILING TO ALLOW THE COVER TO CLOSE. SECURELY MOUNT THE BOX TO THE STRUCTURE WITH THE HINGE TOWARD THE INSIDE OF THE SPACE.
7	CONTRACTOR MAY INSTALL 12" LADDER TRAY TO FACILITATE BREAKOUTS TO BACKBOARD, AT HIS OPTION.
8	THIRD FLOOR MAY NEED ADDITIONAL J-BOXES NEAR THE CHASE. DROP 2-2" CONDUITS THRU CHASE TO SECOND FLOOR AND TURN INTO TRAY.
9	TEL/DATA OUTLETS AT THE HEAD END OF EACH BED HAVE BEEN ELIMINATED. ONLY OUTLETS AS SHOWN IN THE QUARTERS ARE REQUIRED. OTHER OUTLETS REMAIN UNCHANGED. PROVIDE CABLE AS NOTED. NOT ALL OUTLETS HAVE A CABLE DROP.

PROVIDED SOLELY FOR TYPICAL WIRING DESIGN, NOT FOR PLAN LAYOUT.

GRAPHIC SCALE
1/8"=1'-0" 0' 5' 10' 20' 30'

SUBMITTAL TITLE
SUBMITTAL DATE

SYM	DESCRIPTION	DATE	APPR

NAVFAC

PRELIMINARY NOT FOR CONSTRUCTION

SEAL

A/E INFO

APPROVED

FOR COMMANDER NAVFAC / B.L.T.L.

ACTIVITY

SATISFACTORY TO DATE 15 MAY 2014

DES JBG DRW JBG CHK JBG

PROJECT MANAGER RD

IPT TECH. BRANCH HEAD EJH

CHIEF ENG/ARCH (CORE) RHF

ISSUED FOR CONSTRUCTION: 22 OCT 2014

DEPARTMENT OF THE NAVY
NAVAL FACILITIES ENGINEERING COMMAND
IPT GULF COAST
NAVAL FACILITIES ENGINEERING COMMAND SOUTHEAST
NAVAL AIR STATION JACKSONVILLE
NAVAL STATION CORRY STATION
PENSACOLA, FLORIDA
TYPICAL CORRY A SCHOOL BEQ
TYP FIRST FLOOR TEL-DATA-TV WIRING

SCALE: AS NOTED
EPROJECT NO.: –
CONSTR. CONTR. NO. –
NAVFAC DRAWING NO. ––
SHEET 1 OF 3
3701 TN-1

DRAWFORM REVISION: 7 AUGUST 2009

FILE NAME: P:\CIB\project_files\FLORIDA\nas pensacola fl\hjn00204\q4 repairs to corry a school beqs 3709, 3710-1323128\working technical file3701 TN-1 TYP FIRST FLOOR TEL-DATA-TV WIRING.dwg LAYOUT NAME: 3701 TN-1 TYP FIRST FLOOR TEL-DATA-TV WIRING PLOTTED: Monday, May 11, 2015 - 10:23am USER: james.gunter1

SHEET FORMAT IS 22" X 34". IF PRINTED SHEET IS NOT 22" X 34", THEN IT IS NOT TO SCALE

PART SIX B6 - P724 EXISTING DRAWINGS
FOR REFERENCE ONLY

PART SIX B6 - P724 EXISTING DRAWINGS

CORRECTED FINAL BUILDING SUBMITTAL

CONTRACT NO: N69450-10-C-0755

NAVFAC SOUTHEAST
IPT GULFCOAST

CORRY "A" SCHOOL BEQ- P724

CORRY STATION
NAS PENSACOLA, FL

ISSUED FOR CONSTRUCTION

ANDERSON DRACE
JOINT VENTURE

ANDERSON DRACE JOINT VENTURE **P.O. BOX 2, GULFPORT, MS 39502-0002**

02.03.12

QUALITY CONTROL REVIEW

SIGNATURE — DATE 02/03/2012

CONTRACTOR
ANDERSON DRACE JOINT VENTURE

ARCHITECT
ELEY GUILD HARDY ARCHITECTS
1091 TOMMY MUNRO DRIVE, BILOXI, MS 39532
228.594.2323 **P**
228.594.2223 **F**

STRUCTURAL/MECHANICAL/ELECTRICAL/ COMMUNICATIONS ENGINEER
SCHMIDT CONSULTING GROUP, INC
40 S PALAFOX PL STE 300, PENSACOLA, FL 32502
850.438.0050 **P**
850.432.8631 **F**

CATHODIC PROTECTION
MAGGART & ASSOCIATES, INC
5200 NORTH ROYAL ATLANTA DR. STE. D,
TUCKER, GA 30084
770.934.8579 **P**
770.414.4200 **F**

LANDSCAPE ARCHITECT
CSA GROUP, INC
6300 PICCADILLY SQUARE, MOBILE, AL 36609
251.344.4023 **P**
251.344.4052 **F**

FIRE PROTECTION
HUGHES ASSOCIATES, INC
303 E PAR STREET, ORLANDO, FL 32804
407.647.3737 **P**
407.647.4929 **F**

CIVIL ENGINEERS
DRMP, INC (GRADING & DRAINAGE)
100 RICHARD JACKSON BLVD. STE 120
PANAMA CITY, FL 32407
850.236.4868 **P**
850.236.1477 **F**

ELEY GUILD HARDY ARCHITECTS (UTILITIES)
1091 TOMMY MUNRO DRIVE, BILOXI, MS 39532
228.594.2323 **P**
228.594.2223 **F**

SYM	DESCRIPTION	DATE	APPR

NAVFAC

ANDERSON DRACE JOINT VENTURE

REGISTERED ARCHITECT — Mark E. Lisher — 2769 — Biloxi, MS — STATE OF MISSISSIPPI — 1-17-12 — SEAL

EGH ARCHITECTS — eleyguildhardy.com — A/E INFO

APPROVED:

FOR COMMANDER NAVFAC

ACTIVITY

SATISFACTORY TO — DATE JAN 19, 2012

DES	PCW	DRW	PCW	CHK	KLK

DEPARTMENT OF THE NAVY
NAVAL FACILITIES ENGINEERING COMMAND
IPT GULFCOAST

NAVAL FACILITIES ENGINEERING COMMAND SOUTHEAST
NAVAL AIR STATION, JACKSONVILLE, FL

CORRY STATION — PENSACOLA, FLORIDA

BUILDING P-724 Corry "A" School BEQ
REVISED [2+0] MODULE DESIGN

COVERSHEET

SCALE: AS INDICATED
EPROJECT NO.: 10-045
CONSTR. CONTR. NO. N69450-10-C-0755
NAVFAC DRAWING NO. 15050346
SHEET 1 OF 204

G000

VICINITY MAP NTS

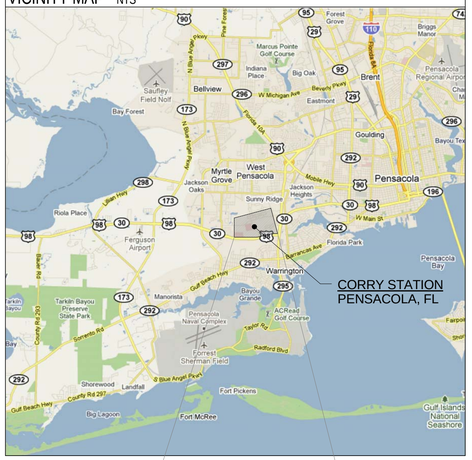

LOCATION MAP NTS

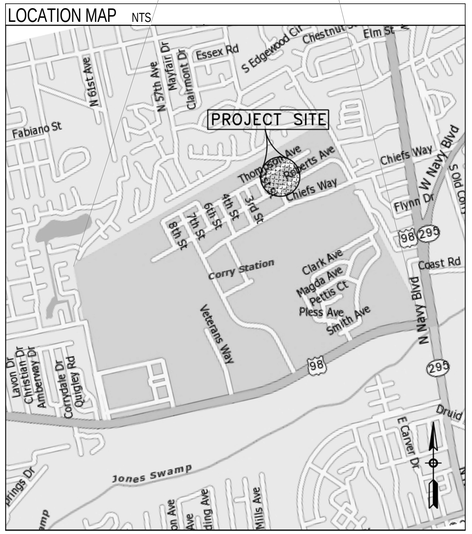

BASE MAP NTS

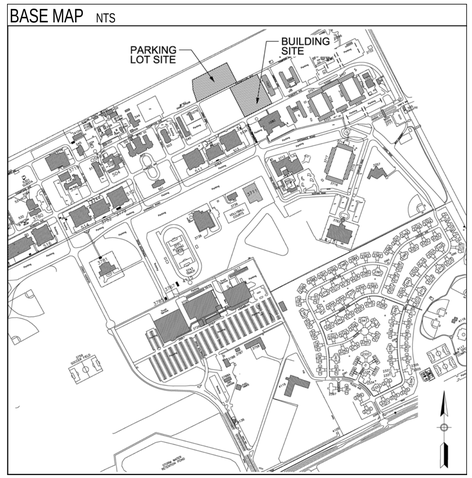

GENERAL DRAWING INDEX

SHEET #	DRAWING #	NAVFAC Dwg #	SHEET NAME
1	G000	15050346	COVERSHEET
2	G001	15050347	GENERAL DATA
3	G002	15050348	GENERAL DATA

LIFE SAFETY INDEX

SHEET #	DRAWING #	NAVFAC Dwg #	SHEET NAME
4	LS001	15050349	LIFE SAFETY NOTES
5	LS101	15050350	GROUND LEVEL LIFE SAFETY PLAN
6	LS102	15050351	SECOND FLOOR LIFE SAFETY PLAN
7	LS103	15050352	THIRD FLOOR LIFE SAFETY PLAN
8	LS104	15050353	FOURTH FLOOR LIFE SAFETY PLAN

CATHODIC PROTECTION INDEX

SHEET #	DRAWING #	NAVFAC Dwg #	SHEET NAME
9	CP1	15050354	CATHODIC PROTECTION LAYOUT
10	CP2	15050355	CATHODIC PROTECTION DETAILS

CIVIL INDEX

SHEET #	DRAWING #	NAVFAC Dwg #	SHEET NAME
11	V000	15050356	TOPOGRAPHIC SURVEY
12	C000	15050357	CONSTRUCTION LAYOUT PLAN
13	C001	15050358	SITE DEMOLITION PLAN
14	C002	15050359	SITE LAYOUT PLAN
15	C003	15050360	SITE GRADING AND DRAINAGE PLAN
16	C003A	15050361	DRAINAGE BASIN MAP
17	C004	15050362	SITE UTILITY PLAN
18	C005	15050363	SITE DETAILS
19	C006	15050364	SITE DETAILS
20	C007	15050365	DRAINAGE DETAILS
21	C008	15050366	DRAINAGE DETAILS
22	C009	15050367	DRAINAGE DETAILS
23	C010	15050368	DRAINAGE DETAILS
24	C011	15050369	DRAINAGE DETAILS
25	C012	15050370	OUTFALL DETAILS

(FOR REFERENCE ONLY. DRAWINGS REFERENCED FROM FDOT)

LANDSCAPE INDEX

SHEET #	DRAWING #	NAVFAC Dwg #	SHEET NAME
26	L001	15050371	LANDSCAPE PLAN
27	L002	15050372	LANDSCAPE PLAN
28	L003	15050373	LANDSCAPE DETAILS
29	L004	15050374	IRRIGATION PLAN & DETAILS

STRUCTURAL INDEX

SHEET #	DRAWING #	NAVFAC Dwg #	SHEET NAME
30	S001	15050375	STRUCTURAL NOTES
31	S002	15050376	STRUCTURAL NOTES
32	S100	15050377	FOUNDATION PLAN
33	S101	15050378	CONTRACTION JOINT PLAN
34	S102	15050379	ENLARGED FRONT ENTRY PLANS
35	S110	15050380	2ND FLOOR FRAMING PLAN
36	S111	15050381	3RD & 4TH FLOOR FRAMING PLAN
37	S120	15050382	2ND FLOOR REINFORCING
38	S121	15050383	3RD & 4TH FLOOR REINFORCING PLAN
39	S130	15050384	ROOF FRAMING PLAN
40	S200	15050385	BRACING ELEVATIONS
41	S201	15050386	BRACING ELEVATIONS
42	S202	15050387	BRACING ELEVATIONS
43	S203	15050388	BRACING ELEVATIONS
44	S204	15050389	BRACING ELEVATIONS
45	S210	15050390	BUILDING SECTIONS
46	S211	15050391	BUILDING SECTIONS
47	S300	15050392	CONCRETE DETAILS
48	S301	15050393	CONCRETE DETAILS
49	S302	15050394	CONCRETE DETAILS
50	S500	15050395	STEEL DETAILS
51	S501	15050396	STEEL DETAILS
52	S502	15050397	STEEL DETAILS
53	S503	15050398	STEEL DETAILS
54	S504	15050399	STEEL DETAILS
55	S505	15050400	STEEL DETAILS
56	S506	15050401	STEEL DETAILS
57	S600	15050402	LIGHT GAUGE STUD DETAILS

ARCHITECTURAL INDEX

SHEET #	DRAWING #	NAVFAC Dwg #	SHEET NAME
58	A001	15050403	ARCHITECTURAL SITE PLAN
59	A002	15050404	SITE DETAILS
60	A003	15050405	SITE DETAILS
61	A100	15050406	1ST FLOOR PLAN
62	A101	15050407	2ND FLOOR PLAN
63	A102	15050408	3RD FLOOR PLAN
64	A103	15050409	4TH FLOOR PLAN
65	A104	15050410	ENLARGED CORE PLANS
66	A105	15050411	ENLARGED CORE PLANS
67	A110	15050412	ROOF PLAN
68	A120	15050413	1ST FLR RCP
69	A121	15050414	2ND FLR RCP
70	A122	15050415	3RD FLR RCP
71	A123	15050416	4TH FLR RCP
72	A124	15050417	ENLARGED CORE RCP'S
73	A125	15050418	ENLARGED MODULE RCP'S
74	A200	15050419	ELEVATIONS
75	A201	15050420	ELEVATIONS
76	A300	15050421	BUILDING SECTIONS
77	A310	15050422	WALL SECTIONS
78	A311	15050423	WALL SECTIONS
79	A330	15050424	STAIR SECTIONS
80	A331	15050425	STAIR SECTIONS
81	A332	15050426	STAIR/ELEVATOR SECTIONS
82	A333	15050427	STAIR DETAILS
83	A400	15050428	ENLARGED MODULE PLANS/PLANS
84	A401	15050429	ENLARGED ELEVATOR/ STAIR PLANS
85	A500	15050430	PLAN DETAILS
86	A501	15050431	PLAN DETAILS
87	A510	15050432	SECTION DETAILS
88	A520	15050433	DETAILS
89	A600	15050434	OPENING SCHEDULE
90	A601	15050435	DOOR/FRAMWINDOW TYPES
91	A610	15050436	H/JS DETAILS
92	A611	15050437	H/JS DETAILS
93	A620	15050438	PARTITION TYPES
94	A621	15050439	PARTITION TYPES

INTERIORS INDEX

SHEET #	DRAWING #	NAVFAC Dwg #	SHEET NAME
95	I100	15050440	1ST FLR- FURNITURE PLAN
96	I101	15050441	2ND FLR- FURNITURE PLAN
97	I102	15050442	3RD FLR- FURNITURE PLAN
98	I103	15050443	4TH FLR- FURNITURE PLAN
99	I200	15050444	1ST FLR- FINISH PLAN
100	I201	15050445	2ND FLR- FINISH PLAN
101	I202	15050446	3RD FLR- FINISH PLAN
102	I203	15050447	4TH FLR- FINISH PLAN
103	I400	15050448	MILLWORK
104	I600	15050449	FINISH SCHEDULE
105	I601	15050450	FINISH SCHEDULE

FIRE PROTECTION INDEX

SHEET #	DRAWING #	NAVFAC Dwg #	SHEET NAME
106	FP001	15050451	FIRE SPRINKLER NOTES
107	FP002	15050452	FIRE SPRINKLER STUB-IN
108	FP101	15050453	GROUND LEVEL FIRE SPRINKLER PLAN
109	FP102	15050454	SECOND FLOOR FIRE SPRINKLER PLAN
110	FP103	15050455	THIRD FLOOR FIRE SPRINKLER PLAN
111	FP104	15050456	FOURTH FLOOR FIRE SPRINKLER PLAN
112	FP500	15050457	FIRE SPRINKLER DETAILS
113	FP501	15050458	FIRE PUMP DETAILS

FIRE ALARM INDEX

SHEET #	DRAWING #	NAVFAC Dwg #	SHEET NAME
114	FA001	15050459	FIRE ALARM NOTES
115	FA101	15050460	GROUND LEVEL FIRE ALARM PLAN
116	FA102	15050461	SECOND FLOOR FIRE ALARM PLAN
117	FA103	15050462	THIRD FLOOR FIRE ALARM PLAN
118	FA104	15050463	FOURTH FLOOR FIRE ALARM PLAN

MECHANICAL INDEX

SHEET #	DRAWING #	NAVFAC Dwg #	SHEET NAME
119	M001	15050464	MECHANICAL LEGEND
120	M002	15050465	MECHANICAL SCHEDULES
121	M003	15050466	MEHCANICAL SCHEDULES
122	M101	15050467	MECHANICAL SITE PLAN
123	M201	15050468	1ST FLOOR HVAC PLAN
124	M202	15050469	2ND FLOOR HVAC PLAN
125	M203	15050470	3RD FLOOR HVAC PLAN
126	M204	15050471	4TH FLOOR HVAC PLAN
127	M205	15050472	HVAC ENLARGED PLANS
128	M301	15050473	MECHANICAL SECTIONS AND ELEVATIONS
129	M401	15050474	MECHANICAL DETAILS
130	M402	15050475	MECHANICAL DETAILS
131	M403	15050476	MECHANICAL DETAILS
132	M404	15050477	MECHANICAL DETAILS
133	M405	15050478	MECHANICAL DETAILS
134	M406	15050479	MECHANICAL DETAILS
135	M501	15050480	MECHANICAL CONTROLS
136	M502	15050481	MECHANICAL CONTROLS
137	M503	15050482	MECHANICAL CONTROLS

PLUMBING INDEX

SHEET #	DRAWING #	NAVFAC Dwg #	SHEET NAME
138	P001	15050483	PLUMBING SCHEDULES, LEGENDS AND NOTES
139	P201	15050484	PLUMBING FIRST FLOOR PLAN- SAN, W & V
140	P202	15050485	PLUMBING SECOND FLOOR PLAN- SAN, W & V
141	P203	15050486	PLUMBING THIRD FLOOR PLAN- SAN, W & V
142	P204	15050487	PLUMBING FOURTH FLOOR PLAN- SAN, W & V
143	P301	15050488	PLUMBING FIRST FLOOR PLAN- HW, CW, & GAS
144	P302	15050489	PLUMBING SECOND FLOOR PLAN- HW, CW, & GAS
145	P303	15050490	PLUMBING THIRD FLOOR PLAN- HW, CW, & GAS
146	P304	15050491	PLUMBING FOURTH FLOOR PLAN- HW, CW, & GAS
147	P401	15050492	PLUMBING RAINWATER HARVESTING- SITE PLAN
148	P402	15050493	PLUMBING RAINWATER HARVESTING SYSTEM DETAILS
149	P501	15050494	PLUMBING RISER DIAGRAMS- SAN, W & V
150	P502	15050495	PLUMBING RISER DIAGRAMS- SAN, W & V
151	P503	15050496	PLUMBING RISER DIAGRAMS- H & CW
152	P601	15050497	PLUMBING DETAILS
153	P602	15050498	PLUMBING DETAILS

ELECTRICAL INDEX

SHEET #	DRAWING #	NAVFAC Dwg #	SHEET NAME
154	E001	15050499	ELECTRICAL LEGEND
155	E002	15050500	ELECTRICAL LEGEND
156	E100	15050501	ELECTRICAL SITE PLAN
157	E201	15050502	1ST FLOOR LIGHTING PLAN
158	E202	15050503	2ND FLOOR LIGHTING PLAN
159	E203	15050504	3RD FLOOR LIGHTING PLAN
160	E204	15050505	4TH FLOOR LIGHTING PLAN
161	E211	15050506	1ST FLOOR ELECTRICAL PLAN
162	E212	15050507	2ND FLOOR ELECTRICAL PLAN
163	E213	15050508	3RD FLOOR ELECTRICAL PLAN
164	E214	15050509	4TH FLOOR ELECTRICAL PLAN
165	E221	15050510	1ST FLOOR MECHANICAL POWER PLAN
166	E222	15050511	2ND FLOOR MECHANICAL POWER PLAN
167	E223	15050512	3RD FLOOR MECHANICAL POWER PLAN
168	E224	15050513	4TH FLOOR MECHANICAL POWER PLAN
169	E231	15050514	ELECTRICAL LIGHTINING PROTECTION PLAN
170	E232	15050515	ELECTRICAL LIGHTNING PROTECTION DETAILS
171	E300	15050516	ELECTRICAL DETAILS
172	E301	15050517	ELECTRICAL DETAILS
173	E302	15050518	ELECTRICAL DETAILS
174	E303	15050519	ELECTRICAL DETAILS
175	E400	15050520	ELECTRICAL RISER DIAGRAM
176	E500	15050521	ELECTRICAL SCHEDULES
177	E501	15050522	ELECTRICAL SCHEDULES
178	E502	15050523	ELECTRICAL SCHEDULES
179	E503	15050524	ELECTRICAL SCHEDULES
180	E504	15050525	ELECTRICAL SCHEDULES
181	E505	15050526	ELECTRICAL SCHEDULES
182	E506	15050527	ELECTRICAL SCHEDULES
183	E507	15050528	ELECTRICAL SCHEDULES
184	E508	15050529	ELECTRICAL SCHEDULES
185	E509	15050530	ELECTRICAL SCHEDULES
186	E510	15050531	ELECTRICAL SCHEDULES
187	E511	15050532	ELECTRICAL SCHEDULES
188	E512	15050533	ELECTRICAL SCHEDULES
189	E513	15050534	ELECTRICAL SCHEDULES

TELECOM INDEX

SHEET #	DRAWING #	NAVFAC Dwg #	SHEET NAME
190	T001	15050535	COMMUNICATIONS LEGEND
191	T100	15050536	ENLARGED COMMUNICATIONS SITE PLAN
192	T101	15050537	OVERALL COMMUNICATIONS SITE PLAN
193	T102	15050538	SITE COMMUNICATIONS DETAILS
194	T201	15050539	1ST FLOOR COMMUNICATIONS PLAN
195	T202	15050540	2ND FLOOR COMMUNICATIONS PLAN
196	T203	15050541	3RD FLOOR COMMUNICATIONS PLAN
197	T204	15050542	4TH FLOOR COMMUNICATIONS PLAN
198	T300	15050543	COMMUNICATIONS DETAILS
199	T301	15050544	COMMUNICATIONS DETAILS
200	T400	15050545	BCO VOICE SYSTEM SINGLE LINE DIAGRAM
201	T401	15050546	RESIDENTIAL VOICE SYSTEM SINGLE LINE DIAGRAM
202	T402	15050547	DATA SYSTEM SINGLE LINE DIAGRAMS
203	T500	15050548	ENLARGED COMMUNICATIONS ROOM PLANS
204	T600	15050549	RACK ELEVATIONS

SYM	DESCRIPTION	DATE	APPR

NAVFAC

ANDERSON DRACE
JOINT VENTURE

REGISTERED ARCHITECT
Mark E. Lisher
2769
Biloxi, MS
STATE OF MISSISSIPPI
1-17-12
SEAL

EGH ARCHITECTS
eleyguildhardy.com
A/E INFO

APPROVED

FOR COMMANDER NAVFAC

ACTIVITY

SATISFACTORY TO DATE JAN 19, 2012

DES PCW DRW PCW CHK KLK

DEPARTMENT OF THE NAVY
NAVAL FACILITIES ENGINEERING COMMAND
IPT GULFCOAST
CORRY STATION

NAVAL FACILITIES ENGINEERING COMMAND SOUTHEAST
NAVAL AIR STATION JACKSONVILLE, FL
PENSACOLA, FLORIDA

BUILDING P-724 Corry "A" School BEQ
REVISED [2+0] MODULE DESIGN

GENERAL DATA

SCALE: AS INDICATED

EPROJECT NO.: 10-045

CONSTR. CONTR. NO.
N69450-10-C-0755

NAVFAC DRAWING NO.
15050347

SHEET 2 OF 204

G001

ABBREVIATION INDEX

A/C	air condition
ACC	accessible
ACOUS INSUL	acoustical insulation
ACOUS PNL	acoustical panel
ACS PNL	access panel
ACT	acoustical ceiling tile
ADDL	additional
ADJ	adjacent
ADJ	adjustable
AFF	above finished floor
AHU	air handling unit
ALT	alternate
ALUM	aluminum
APPD	approved
APPROX	approximate
AR	as required
ARCH	Architect
ASPH	asphalt
ASSY	assembly
ATTN	attention
AUTO	automatic
AV	audio visual
AVG	average
AWC	acoustical wall covering
B/B	back to back
BAT	batten
BD	board
BDRY	boundary
BLDG	building
BLKT	blanket
BLT IN	built-in
BLW	below
BOS	bottom of steel
BOT/BTM	bottom
BRCG	bracing
BRZ	bronze
BS	both sides
BTWN	between
BUR	builtup roofing
BW	both ways
C CONC	cast concrete
C TO C	center to center
C&G	curb and gutter
CAB	cabinet
CAV	cavity
CB	catch basin
CBB	cementitious (backer) board
CCTV	closed circuit television
CER	ceramic
CF	contractor furnished
CF/CI	contractor furnished/contractor installed
CF/OI	contractor furnished/owner installed
CFLG	counterflashing
CFMF	cold-formed metal framing
CG	corner guard
CIP	cast-in-place
CJ	construction joint
CJ	control joint
CL	center line
CLG	ceiling
CLG HT	ceiling height
CLL	column line
CLOS	closure
CLR	clear
CMU	concrete masonry unit
CNCL	concealed
CNR	corner
CO	cleanout
COL	column
COMM	communication
CONC	concrete
CONTR	Contractor
CONT	continuous
COTG	cleanout to grade
COV	cover
CP	control panel
CPT	carpet
CS	cast stone
CSB	concrete splash block
CSWK	casework
CT	ceramic tile
CTB	ceramic tile base
CTR	center
CTRL	control
CTV	cable television
CURT	curtain
D	deep / depth
DAT	datum
DBL	double
BDL GLZ	double glaze
DEMO	demolition
DET	detail
DF	drinking fountain
DH	double hung (door, window)
DIA	diameter
DIAG	diagonal
DIFF	diffuser
DIM	dimension
DIV	divide
DMPF	dampproofing
DS	downspout
DWG	drawing
DWR	drawer
E	East
EA	
EC	each
EGB	edge of curb
EIFS	exterior gypsum board
EJ	exterior insulation and finish system
EL	expansion joint
ELEC	elevation
ELEV	electrical
ENCL	elevator
EOS	enclosure
EPT	edge of slab
EQ	epoxy paint
EQL SP	equal
EQUIP	equally spaced
ERD	equipment
ESMT	existing roof drain
ETC	easement
EW	et cetera
EXH HD	each way
EXHV	exhaust hood
EXIST	exhaust vent
EXP	existing
EXP	expansion
EXP BT	exposed
EXST GR	expansion bolt
EXT	existing grade
	exterior
F/F	face to face
FAB	fabric
FAR	floor area ratio
FAS	fascia
FD	floor drain
FDC	fire department connection
FDTN	foundation
FDV	fire department valve
FE	fire extinguisher
FEC	fire extinguisher cabinet
FF EL	finish floor elevation
FF&E	furniture, fixture, and equipment
FH	fire hydrant
FHC	fire hose cabinet
FIN	finish
FIN FLR	finish floor
FIN GR	finish grade
FIN WD	finish wood
FLASH	flashing
FLEX	flexible
FLG	flooring
FLMT	flush mount
FLR	floor
FLUOR	fluorescent
FO	finished opening
FOC	face of concrete / curb
FOF	face of finish
FOM	face of masonry
FOS	face of slab / stud
FOW	face of wall
FP	fireproof
FR	fire rating/resistant
FR	frame
FRA	fire rated assembly
FREQ	frequency
FRMG	framing
FRP	fiberglass reinforced plastic
FRZ	freezer
FSH	fire sprinkler head
FSP	fire standpipe
FSTNR	fastener
FT	fire treated
FT	foot/feet
FTG	footing
FURG	furring
FURN	furniture
FUT	future
FW	fire wall
GA	gage
GAL	gallon
GALV	galvanized
GB	grab bar
GDR	guardrail
GFCI	ground fault circuit interrupter
GL	ground level
GL BLK	glass block
GLU LAM	glued laminated wood
GLZ	glazing
GMP	guaranteed maximum price
GR BM	grade beam
GR FL	ground floor
GR LN	grade line
GRTG	grating
GT	grease trap / grout
GUT	gutter
GYP BD	gypsum board
H	high
H PLAM	high pressure plastic laminate
HAZ MAT	hazardous materials
HB	hose bibb
HC	handicap
HC	hollow core
HC	hose cabinet
HCP	handicapped
HDPE	high density polyethylene
HDW	hardware
HDWD	hardwood
HID	high intensity discharge
HM	hollow metal
HNDRL	handrail
HORIZ	horizontal
HST	hoist
HT	height
HVAC	heating, ventilating,and air conditioning
ID	Inside diameter
INCL	included
INSUL	insulation
INSUL PNL	insulated metal panel
INT	interior
INTERCOM	intercommunication
INV	invert
INV EL	invert elevationr
L	angle
LAM	laminate
LAV	lavatory
LBS	pound
LF	linear feet (foot)
LIN	linear
LINO	linoleum
LKR	locker
LNDSCP	landscape
LOC	location
LONG	longitudinal
LP	light pole
LT WT	lightweight
LTD	limited
LTG	lighting
LVR	louver
LYR	Layer
M	meter
MAX	maximum
MD	metal deck
MECH	mechanical
MEL	melamine
MEMB	membrane
METF	metal flashing
MF	mill finish
MFD	manufactured
MFR	manufacturer
MH	manhole
MID	middle
MIN	minimum / minute
MIRR	mirror
MISC	miscellaneous
ML&P	metal lath and plaster
MLDG	molding (moulding)
MLWK	millwork
MO	masonry opening
MOD	modify
MOD BIT	modified bitumen
MR	moisture resistant
MRB	marble base
MRT	marble threshold
MS	mop sink
MSTRE	moisture
MT	metal threshold
MT	mount
MT	mosaic tile
MTL	metal
MVBL	movable
MICRO	microwave
MWP	membrane waterproofing
N	North
NA	not applicable
NCOMBL	noncombustible
NEG	negative
NIC	not in contract
NO / #	number
NOM	nominal
NONFLMB	nonflammable
NP	no paint
NTS	not to scale
O/O	out to out
OC	on center
OD	outside diameter/dimension
OF	outside face
OF/CI	owner furnished/contractor installed
OF/OI	owner furnished/owner installed
OFS	outside face of studs
OH DR	overhead (coiling) door
OPNG	opening
OPP	opposite
OPR	operable
OZ	ounce
PAR	parallel / parapet
PARA	paragraph
PARG	parge
PAT	pattern
PB	panic bar
PBD	particleboard
PC	piece
PCC	precast concrete
PCCP	concrete pavement
PCP	portland cement plaster
PCT / %	percent
PED	pedestal
PEN	penetrate
PERF	perforated
PERIM	perimeter
PERP	perpendicular
PH	phase
PIL	pilaster
PIV	post indicator valve
PL	property line
PLAM	plastic laminate
PLAS	plastic
PLG	piling
PLYWD	plywood
PMET	painted metal
PNL	panel
PORC	porcelain
POW LN	power line
PR	pair
PRCST	precast
PREFAB	prefabricate
PREFIN	prefinish
PREFMD	preformed
PRESS	pressure
PS CONC	prestressed concrete
PSF	pounds per square foot
PSI	pounds per square inch
PT	paint / pressure treated
PTN	partition
PUR	purlins
PV RD	paved road
PVC	polyvinyl chloride (plastic)
PVG	paving
PWR	power
QT	quarry tile
QTB	quarry tile base
QTR	quarter
QTZ	quartz material
QTY	quantity
R	radius
RB	rubber base
RC	reinforced concrete
RCP	reflected ceiling plan
RCP	reinforced concrete pipe
RD	roof drain
RDG INS	rigid insulation
REBAR	reinforcing steel bars
REC	recessed
REF	reference
REINF	reinforce
REQD	required
RESIL	resilient
RET	return
REV	revision
RF	resilient flooring
RFG	roofing
RH	roof hatch
RL	roof leader
RLG	railing
RM	room
RO	rough opening
ROW	right of way
RTF	rubber tile floor
RTG	rating
RVL	reveal
S	South
SA	supply air
SB	splash block
SCHED	schedule
SCMU	solid concrete masonry unit
SCP	scupper
SCRN	screen
SCWD	solid core wood door
SD	storm drain
SDG	siding
SF	square foot (feet)
SGL	single
SHFT	shaft (elevator)
SHTHG	sheathing
SHV	shelving
SIM	similar
SJ	scored joint
SKLT	skylight
SLNT	sealant
SLV	sleeve
SND INS	sound insulation
SP	standpipe
SPKLR	sprinkler
SPKR	speaker
SPLY	supply
SQ	square
SQ IN	square inch
SQ YD	square yard
SS	sanitary sewer
SS	service sink
SS	standing seam (roof)
SS	storm sewer
SSM	solid surface material
SST	stainless steel
STC	sound transmission class
STD	standard
STL	steel
STL RF DK	steel roof deck
STRUCT	structural
SUB FL	subfloor
SURF	surface
SURR	surround
SUSP CGL	suspended ceiling
SV	sheet vinyl
SWR	sewer
SYMM	symmetrical
SYS	system
T&B	top and bottom
T&G	tongue and groove
T/S	tub/shower
TB	through bolt
TB	towel bar
TD	towel dispenser
TD	trench drain
TDR	towel dispenser/receptacle
TEMP	temporary
TER	terrazzo
THK	thickness
THRES	threshold
THRU	through
THRUOUT	throughout
TK BD	tackboard
TMH	top of manhole
TMPD GL	tempered glass
TN	true north
TO	top of
TOB	top of beam
TOC	top of curb
TOF	top of floor / frame
TOJ	top of joist
TOM	top of masonry
TOP	top of parapet
TOPO	topography
TOS	top of slab/ stl
TOT	top of truss
TOW	top of wall
TP	telephone pole
TPD	toilet paper dispenser
TPH	toilet paper holder
TRANS	transom
TRTD	treated
TV	television
TYP	typical
UGND	underground
UNO	unless noted otherwise
UTIL	utility
VAN	vanity
VAR	varies
VCT	vinyl composition tile
VERT	vertical
VIF	verify in field
VIS	visual
VNR	veneer
VR	vapor retarder
VTR	vent through roof
VWC	vinyl wall covering
W	west / wide / width
W CAB	wall cabinets
W/	with
W/O	without
W/W	wall to wall
WB	wood base
WBL	wood blocking
WC	wall covering
WC	water closet
WCLR	water cooler
WD	wood
WDP	wood paneling
WFAB	wall fabric
WH	wall hung
WH	water heater
WH	weep hole
WM	water meter / wood molding
WP	waterproofing
WPM	waterproofing membrane
WR	water repellent / resistant
WS	weather stripping
WSCT	wainscot
WT	wall tile
WWF	welded wire fabric
WWM	welded wire mesh
X BRACE	cross brace
YD	yard

SYMBOL LEGEND

ROOM NAME 000	ROOM TAG
012 B	DOOR / OPENING TAG
A-201 2	EXTERIOR ELEVATION/MILLWORK & CASEWORK ELEVATION
2 A-320	BUILDING SECTION & WALL SECTION
1 A-130	ENLARGED DETAIL
XX	PARTITION TYPE TAG
A	WINDOW TAG
	WOOD BLOCKING
	GYPSUM WALL BOARD
	BRICK IN PLAN AND SECTION
	BATT INSULATION
	CMU IN PLAN
	CONCRETE IN PLAN
	CONCRETE IN SECTION
	RIGID INSULATION IN SECTION

DESIGN TEAM

CATHODIC PROTECTION
MAGGART AND ASSOCIATES, INC.
JOEL MAGGART
5002 NORTH ROYAL ATLANTA DR., SUITE D.
TUCKER, GA 30084
TEL: (770) 934.8579
FAX: (770) 414.4200
jm@maggart.net EMAIL

CIVIL
ELEY GUILD HARDY ARCHITECTS
LES SEYMOUR, CIVIL ENGINEER
1091 TOMMY MUNRO DR.
BILOXI, MS 39532
TEL: (228) 594.2323
FAX: (228) 594.2223

DRMP, INC
ERIC GOOCH, CIVIL ENGINEER
100 RICHARD JACKSON BLVD. STE 120
PANAMA CITY, FL 32407
TEL: (850) 236.4868
FAX: (850) 236.1477
lseymour@eleyguildhardy.com EMAIL
egooch@drmp.com EMAIL

LANDSCAPE
CSA GROUP, INC.
JAMES CROWE, LANDSCAPE ARCHITECT
P.O. BOX 851238
MOBILE, AL 36685
TEL: (251) 344.4023
FAX: (251) 344.4052
jcrowe@csagroupinc.com EMAIL

ARCHITECT
ELEY GUILD HARDY ARCHITECTS
MARK LISHEN, PRINCIPAL-IN-CHARGE
KYLE KISH, SR. PROJECT MANAGER
PATRICK WILBER, PROJECT COORDINATOR
1091 TOMMY MUNRO DR.
BILOXI, MS 39532
TEL: (228) 594.2323
FAX: (228) 594.2223
kkish@eleyguildhardy.com EMAIL

INTERIORS
BULLOCK TICE ASSOCIATES
MARYANNE MACNEIL, INTERIOR DESIGNER
909 EAST CERVANTES STREET, SUITE B
PENSACOLA, FL 32501
TEL: (850) 434.4544
FAX: (850) 432.5208
m.macneil@bulltice.com EMAIL

STRUCTURAL
SCHMIDT CONSULTING GROUP, INC
STUART SMITH, STRUCTURAL ENGINEER
SCOTT LEWKOWKSI, STRUCTURAL ENGINEER
JUSTIN STEGALL, STRUCTRAL TECH.
30 SOUTH PALAFOX PL STE 300
PENSACOLA, FL 32502- 5699
TEL: (850) 438.0050
FAX: (228) 432.8631
ssmith@schmidtconsultinggroup.com EMAIL
scott@schmidtconsultinggroup.com EMAIL

FIRE PROTECTION
HUGHES ASSOCIATES, INC
HAMID BAHADORI. P.E.
303 EAST PAR STREET
ORLANDO, FL 32502
TEL: (407) 647.3737
FAX: (407) 647.4929
bahadori@haifire.com EMAIL

MECHANICAL & PLUMBING
SCHMIDT CONSULTING GROUP, INC
JOE JONES, MECHANICAL ENGINEER
CLAY DALON, MECHANICAL DESIGNER
30 SOUTH PALAFOX PL STE 300
PENSACOLA, FL 32502- 5699
TEL: (850) 438.0050
FAX: (228) 432.8631
joe@schmidtconsultinggroup.com EMAIL
rudye@schmidtconsultinggroup.com EMAIL

ELECTRICAL
SCHMIDT CONSULTING GROUP, INC
TODD NICHOLSON, ELECTRICAL ENGINEER
BERRY VENEY, ELECTRICAL ENGINEER
30 SOUTH PALAFOX PL STE 300
PENSACOLA, FL 32502- 5699
TEL: (850) 438.0050
FAX: (228) 432.8631
toddn@schmidtconsultinggroup.com EMAIL
berry@schmidtconsultinggroup.com EMAIL

TELECOMM
SCHMIDT CONSULTING GROUP, INC
JOSH LOGAN, R.C.D.D.
139 EAST GOVERNMENT STREET
PENSACOLA, FL 32502
TEL: (850) 438.0050
FAX: (228) 432.8631
josh@schmidtconsultinggroup.com EMAIL

SYM	DESCRIPTION	DATE	APPR

NAVFAC

ANDERSON DRACE JOINT VENTURE

REGISTERED ARCHITECT Mark E. Lishen 2769 Biloxi, MS STATE OF MISSISSIPPI 1-19-12 SEAL

EGH ARCHITECTS eleyguildhardy.com A/E INFO

APPROVED
FOR COMMANDER NAVFAC
ACTIVITY
SATISFACTORY TO DATE JAN 19, 2012

DES PCW	DRW PCW	CHK KLK

DEPARTMENT OF THE NAVY
NAVAL FACILITIES ENGINEERING COMMAND
NAVAL FACILITIES ENGINEERING COMMAND SOUTHEAST
IPT GULFCOAST NAVAL AIR STATION JACKSONVILLE, FL
CORRY STATION PENSACOLA, FLORIDA

BUILDING P-724 Corry "A" School BEQ
REVISED [2+0] MODULE DESIGN

GENERAL DATA

SCALE: AS INDICATED
EPROJECT NO.: 10-045
CONSTR. CONTR. NO. N69450-10-C-0755
NAVFAC DRAWING NO. 15050348
SHEET 3 OF 204

G002

APPLICABLE CODES

UFC 3-600-01 FIRE PROTECTION ENGINEERING FOR FACILITIES, 26 SEPTEMBER 2006, CHANGE 1, 14 JULY 2009
UFC 3-600-10N FIRE PROTECTION ENGINEERING, FINAL DRAFT AUGUST 2007
UFC 4-010-01 DOD MINIMUM ANTITERRORISM STANDARDS FOR BUILDINGS, 22 JANUARY 2007
UFC 4-021-01 MASS NOTIFICATION SYSTEMS, 9 APRIL 2008
NFPA 10 PORTABLE FIRE EXTINGUISHERS (2010)
NFPA 13 INSTALLATION OF SPRINKLER SYSTEMS (2010)
NFPA 14, STANDARD FOR THE INSTALLATION OF STANDPIPE AND HOSE SYSTEMS, (2010)
NFPA 20, STANDARD FOR THE INSTALLATION OF STATIONARY PUMPS FOR FIRE PROTECTION (2010)
NFPA 24 INSTALLATION OF PRIVATE SERVICE MAINS AND THEIR APPURTENANCES (2010)
NFPA 70 NATIONAL ELECTRICAL CODE (2011)
NFPA 72 NATIONAL FIRE ALARM CODE (2010)
NFPA 90A INSTALLATION OF AIR CONDITIONING AND VENTILATING SYSTEMS (2009)
NFPA 90B INSTALLATION OF WARM AIR HEATING AND AIR CONDITIONING SYSTEMS (2009)
NFPA 101 LIFE SAFETY CODE (2009)
INTERNATIONAL BUILDING CODE (2009)

BUILDING SUMMARY

BUILDING AREA: 22,494 SQ.FT.
PRIMARY OCCUPANCY CLASSIFICATION: NEW DORMITORY (R-2 IBC)
CONSTRUCTION TYPE: IBC TYPE II-B

BUILDING CONSTRUCTION TYPE:
ALLOWABLE BUILDING AREA: 48,000 (IBC TABLE 503, INCLUDES INCREASE FOR SPRINKLER PROTECTION)
ALLOWABLE BUILDING HEIGHT: 75 FT. (IBC TABLE 503, INCLUDES INCREASE FOR SPRINKLER PROTECTION)
ALLOWABLE NUMBER OF STORIES: 4 STORIES (IBC TABLE 503, NO ALLOWABLE INCREASE INCLUDED)
ACTUAL BUILDING HEIGHT: 55 FT (AVG. ROOF HEIGHT).
ACTUAL NUMBER OF STORIES: 4 STORIES

FIRE PROTECTION:
BUILDING TO BE PROVIDED WITH COMPLETE AUTOMATIC FIRE SPRINKLER PROTECTION.
BUILDING TO BE PROVIDED WITH A CLASS 1 AUTOMATIC STANDPIPE SYSTEM.
BUILDING TO BE PROVIDED WITH A COMPLETE FIRE ALARM / MASS NOTIFICATION SYSTEM.
BUILDING TO BE PROVIDED WITH FIRE EXTINGUISHERS THROUGHOUT.

OCCUPANT LOAD FACTORS

RESIDENTIAL	200 GROSS SQ.FT. / PERSON
BUSINESS:	100 GROSS SQ.FT. / PERSON
LOUNGE ROOMS:	15 NET SQ.FT. / PERSON
STORAGE/MECH/ELECTRICAL:	300 GROSS SQ.FT. / PERSON

MEANS OF EGRESS REQUIREMENTS (WITH AUTOMATIC FIRE SPRINKLER SYSTEM)

NEW DORMITORY OCCUPANCY
MAXIMUM ALLOWABLE TRAVEL DISTANCE WITHIN UNIT TO UNIT DOOR: 125 FT.
MAXIMUM ALLOWABLE TRAVEL DISTANCE FROM UNIT DOOR TO EXIT: 200 FT.
MAXIMUM ALLOWABLE DEAD END: 50 FT.
MAXIMUM ALLOWABLE COMMON PATH OF TRAVEL: 50 FT. (TRAVEL DISTANCE WITHIN UNIT NOT INCLUDED)

EXIT MARKING AND EMERGENCY LIGHTING
1. MEANS OF EGRESS SHALL HAVE SIGNS IN ACCORDANCE WITH LSC.
2. EMERGENCY LIGHTING SHALL BE PROVIDED.

EXIT SIGNS
1. READILY VISIBLE SIGNS MUST MARK ACCESS TO EXITS.
2. SIGN PLACEMENT WILL BE SUCH THAT NO POINT IN THE EXIT ACCESS CORRIDOR IS MORE THAN 100 FEET FROM A VISIBLE EXIT.
3. ILLUMINATION EQUAL TO 5-FOOT CANDLES AT THE SURFACE OF THE SIGN.

ILLUMINATION OF MEANS OF EGRESS
1. MEANS OF EGRESS: ONE FOOT CANDLE AT FLOOR LEVEL
2. ILLUMINATION OR MEANS OF EGRESS SHALL BE FROM A SOURCE CONSIDERED RELIABLE BY THE AUTHORITY HAVING JURISDICTION
3. THE MEANS OF EGRESS, INCLUDING THE EXIT DISCHARGE, SHALL BE ILLUMINATED AT ALL TIMES THE BUILDING SPACE SERVED BY THE MEANS OF EGRESS IS OCCUPIED.

SHAFT ENCLOSURE CONSTRUCTION:
1. SHAFT ENCLOSURES SHALL HAVE A FIRE-RESISTANCE RATING OF NOT LESS THAN 2 HOURS. SHAFT ENCLOSURES SHALL BE CONSTRUCTED AS FIRE BARRIERS IN ACCORDANCE WITH SECTION 706. SHAFT ENCLOSURES SHALL HAVE A FIRE-RESISTANCE RATING NOT LESS THAN THE FLOOR ASSEMBLY PENETRATED, BUT NEED NOT EXCEED 2 HOURS. (IBC 707.4)
2. SHAFT ENCLOSURE WALLS SHALL EXTEND FROM THE TOP OF THE FLOOR/CEILING ASSEMBLY BELOW TO THE UNDERSIDE OF THE FLOOR OR ROOF SLAB OR DECK ABOVE AND SHALL BE SECURELY ATTACHED THERETO. THESE WALLS SHALL BE CONTINUOUS THROUGH CONCEALED SPACES SUCH AS THE SPACE ABOVE A SUSPENDED CEILING. THE SUPPORTING CONSTRUCTION SHALL BE PROTECTED TO AFFORD THE REQUIRED FIRE-RESISTANCE RATING OF THE ELEMENT SUPPORTED. HOLLOW VERTICAL SPACES WITHIN THE SHAFT ENCLOSURE CONSTRUCTION WALL SHALL BE FIRESTOPPED AT EVERY FLOOR LEVEL. (IBC 707.5)
3. WHERE EXTERIOR WALLS SERVE AS A PART OF A REQUIRED SHAFT ENCLOSURE, SUCH WALLS SHALL COMPLY WITH THE REQUIREMENTS OF SECTION 704 FOR EXTERIOR WALLS AND THE FIRE-RESISTANCE-RATED ENCLOSURE REQUIREMENTS SHALL NOT APPLY. (IBC 707.6)
4. PENETRATIONS IN A SHAFT ENCLOSURE SHALL BE PROTECTED IN ACCORDANCE WITH SECTION 712 AS REQUIRED FOR FIRE BARRIERS. (IBC 707.8)
5. PENETRATIONS OF A SHAFT ENCLOSURE BY DUCTS AND AIR TRANSFER OPENINGS SHALL COMPLY WITH SECTIONS 712 AND 716. (IBC 707.10)
6. PER UFC 3-600-01, 6-30.1, ELEVATOR HOISTWAY SHALL BE OF TWO-HOUR CONSTRUCTION.

HANDRAILS AND GUARDRAILS

1. STAIRS AND RAMPS SHALL HAVE HANDRAILS ON BOTH SIDES. (LSC 7.2.2.4.1.1)
2. STAIRS AND RAMPS SHALL BE CLEAR OF ALL OBSTRUCTIONS EXCEPT PROJECTIONS NOT EXCEEDING 4½ INCHES AT OR BELOW HANDRAIL HEIGHT ON EACH SIDE. (LSC 7.2.2.4.3)
3. NEW HANDRAILS SHALL BE INSTALLED TO PROVIDE A CLEARANCE OF NOT LESS THAN 2 1/4 INCHES BETWEEN THE HANDRAIL AND THE WALL TO WHICH IT IS FASTENED. (LSC 7.2.2.4.4.5)
4. HANDRAILS SHALL BE PROVIDED WITHIN 30 INCHES OF ALL PORTIONS OF THE STAIR WIDTH REQUIRED FOR EGRESS CAPACITY. (LSC 7.2.2.4.1.2)
5. GUARDS SHALL BE PROVIDED FOR RAMPS. (LSC 7.2.5.4.1)
6. RAMPS SHALL BE PROVIDED WITH HANDRAILS, ON BOTH SIDES, WHEN THE RAMP SLOPE IS GREATER THAN 1:20 OR A RAMP RUN HAS A RISE GREATER THAN 6 INCHES. THE HEIGHT OF HANDRAILS AND GUARDS SHALL BE MEASURED VERTICALLY TO THE TOP OF THE GUARD OR RAIL FROM THE WALKING SURFACE ADJACENT THERETO. (LSC 7.2.5.4)
7. HANDRAIL HEIGHT SHALL BE > 34 IN. TO < 38 IN. ABOVE THE SURFACE OF THE TREAD, MEASURED VERTICALLY FROM THE TOP OF THE RAIL FROM THE LEADING EDGE OF THE TREAD. (LSC 7.2.2.4.4.1)
8. HANDRAIL SHAPE, CIRCULAR CROSS SECTION WITH OUTSIDE DIAMETER > 1-¼ IN. TO < 2 IN. OR, NON-CIRCULAR CROSS SECTION WITH PERIMETER > 4 IN. TO < 6-¼ IN. AND LARGEST CROSS SECTION < 2-¼ IN. WITH ROUNDED EDGE (RADIUS > 1/8 IN.). (LSC 7.2.2.4.4.6)
9. HANDRAILS AND GUARDS SHALL CONTINUE FOR THE FULL LENGTH OF EACH FLIGHT OF STAIRS. AT TURNS OF NEW STAIRS, INSIDE HANDRAILS SHALL BE CONTINUOUS BETWEEN FLIGHTS AT LANDINGS. (LSC 7.2.2.4.2)
10. HANDRAILS THAT ARE NOT CONTINUOUS BETWEEN FLIGHTS SHALL EXTEND HORIZONTALLY, AT THE REQUIRED HEIGHT, NOT LESS THAN 12 IN. BEYOND THE TOP RISER AND CONTINUE TO SLOPE FOR A DEPTH OF ONE TREAD BEYOND THE BOTTOM RISER. (LSC 7.2.2.4.4.10)
11. HANDRAILS, SERVING RAMPS, THAT ARE NOT CONTINUOUS SHALL EXTEND AT LEAST 18 INCHES BEYOND THE TOP AND BOTTOM OF THE RAMP SEGMENT AND SHALL BE PARALLEL WITH THE FLOOR OR GROUND SURFACE. (LSC 7.2.5.4)
12. HANDRAIL ENDS SHALL BE RETURNED TO THE WALL OR FLOOR OR SHALL TERMINATE AT NEWEL POSTS. (LSC 7.2.2.4.9)
13. GUARDS ARE REQUIRED TO PREVENT FALLS OVER THE OPEN SIDE WHEN MEANS OF EGRESS IS MORE THAN 30 IN. ABOVE FLOOR OR GRADE BELOW. (LSC 7.1.8)
14. GUARDRAIL HEIGHT MINIMUM: 42 IN. (LSC 7.2.2.4.5.2)
15. OPEN GUARDS SHALL HAVE INTERMEDIATE RAILS OR ORNAMENTAL PATTERN TO PREVENT 4 IN. DIAMETER SPHERE FROM PASSING THROUGH ANY OPENING UP TO A HEIGHT OF 34 INCHES. (LSC 7.2.2.4.5.3)
EXCEPTION: THE TRIANGULAR OPENINGS FORMED BY THE RISER, TREAD, AND BOTTOM ELEMENT OF A GUARDRAIL AT THE OPEN SIDE OF A STAIR SHALL BE OF SUCH SIZE THAT A SPHERE 6 IN. IN DIAMETER SHALL NOT PASS THROUGH THE TRIANGULAR OPENING. (LSC 7.2.2.4.5.3)
16. FOR OPEN GUARDS, FROM A HEIGHT OF 34 INCHES TO 42 INCHES ABOVE THE ADJACENT WALKING SURFACES, A SPHERE 8 INCHES IN DIAMETER SHALL NOT PASS.

FIRE EXTINGUISHERS:

1. PORTABLE FIRE EXTINGUISHERS SHALL BE PROVIDED AND SHALL BE INSTALLED IN ACCORDANCE WITH NFPA 10, STANDARD FOR PORTABLE FIRE EXTINGUISHERS.
2. FIRE EXTINGUISHERS SHALL NOT BE OBSTRUCTED OR OBSCURED FROM VIEW. IN LARGE ROOMS, AND IN CERTAIN LOCATIONS WHERE VISUAL OBSTRUCTIONS CANNOT BE COMPLETELY AVOIDED, MEANS SHALL BE PROVIDED TO INDICATE THE EXTINGUISHER LOCATION.
3. FIRE EXTINGUISHERS HAVING A GROSS WEIGHT NOT EXCEEDING 40 LB. SHALL BE INSTALLED SO THAT THE TOP OF THE FIRE EXTINGUISHER IS NOT MORE THAN 5 FT. ABOVE THE FLOOR. FIRE EXTINGUISHERS HAVING A GROSS WEIGHT GREATER THAN 40 LB. SHALL BE SO INSTALLED THAT THE TOP OF THE FIRE EXTINGUISHER IS NOT MORE THAN 3 ½ FT. ABOVE THE FLOOR. IN NO CASE SHALL THE CLEARANCE BETWEEN THE BOTTOM OF THE FIRE EXTINGUISHER AND THE FLOOR BE LESS THAN 4 INCHES.
4. FIRE EXTINGUISHERS LOCATED IN CABINETS OR WALL RECESSES MUST BE PLACED WITH THE EXTINGUISHER OPERATING INSTRUCTIONS FACING OUTWARD.
5. MAXIMUM TRAVEL DISTANCE TO ANY EXTINGUISHER SHALL BE 75 FEET, FOR CLASS A HAZARD AREAS.
6. ALL FIRE EXTINGUISHERS SHALL BE LOCATED IN SEMI-RECESSED CABINETS IN FINISHED SPACES. RECESSED CABINETS LOCATED IN FIRE RATED WALLS, SHALL BE LISTED OR APPROVED FIRE RATED CABINETS THAT CAN BE INSTALLED IN FIRE RATED WALLS WITHOUT HAVING TO "BUILD OUT" THE WALL. CABINET SHALL BE CONSTRUCTED OF 16 GAUGE COLD-ROLLED STEEL DOOR PANEL / FRONT, AND A 22 GAUGE COLD ROLLED STEEL TUB. PROVIDE A STAINLESS STEEL CABINET DOOR IF CABINET IS EXPOSED TO THE ENVIRONMENT.
7. FIRE EXTINGUISHERS LOCATED IN INDUSTRIAL SPACES, MECHANICAL ROOMS, AND ELECTRICAL ROOMS MAY BE LOCATED IN SURFACE MOUNTED CABINETS PROVIDED THEY DO NOT INTERFERE WITH EXITING OR OPERATIONS OF THAT SPACE.

FIRE WALL IDENTIFICATION:

IDENTIFY ALL FIRE RATED WALLS WITH SIGNS STATING THE FOLLOWING; "FIRE WALL DO NOT PENETRATE". FOR AESTHETIC REASONS, THIS REQUIREMENT DOES NOT APPLY TO WALLS INSIDE STAIRWELLS OR PUBLIC AREAS SUCH AS OFFICES, LOBBIES, CORRIDORS, ETC THAT DO NOT HAVE DROP CEILINGS. IN AREAS WITH DROP CEILINGS, PAINT NOTIFICATION ON THE WALL ABOVE THE DROP/FINISHED CEILING. IN MECHANICAL, ELECTRICAL AND OTHER SIMILAR ROOMS, PLACE SIGNS AT 8-FEET (2.4 M) ABOVE FINISHED FLOOR LEVEL. SPACE SIGNS AT A MAXIMUM OF 10-FOOT (3.0 M) INTERVALS. IN ROOMS WITH RAISED FLOORING, PLACE SIGNS ON FIRE WALLS UNDER THE FLOOR WITH SPACING OF SIGNAGE REDUCED TO 5 FOOT (1.5 M) INTERVALS. APPLY SIGNS USING FLORESCENT RED OR ORANGE PAINT OVER STENCILS. LETTERS MUST BE A MINIMUM OF 4-INCHES (100 MM) IN HEIGHT. METAL, PLASTIC OR PAPER DECAL SIGNS ARE NOT ACCEPTABLE. TAKE CARE WHEN APPLYING SIGNAGE TO PREVENT OVER-SPRAY ONTO ADJACENT FINISHES. (UFC 3-600-10N 2-5.2)

TYPE II-B CONSTRUCTION

STRUCTURAL ELEMENT	FIRE RESISTANCE RATING (HRS.)
STRUCTURAL FRAME (INCLUDING COLUMNS, GIRDERS, TRUSSES)	0
INTERIOR BEARING WALLS	0
EXTERIOR BEARING WALLS AND PARTITIONS	0
FLOOR CONSTRUCTION	0
ROOF CONSTRUCTION	0
EXTERIOR NONBEARING WALLS AND PARTITIONS	SEE TABLE BELOW FOR EXTERIOR WALLS

TABLE IS BASED UPON IBC TABLE 601 AND VALUES REFLECT TABLE 601 FOOT NOTE b.

TYPE II-B CONSTRUCTION
EXTERIOR WALL RATING

FIRE SEPARATION DISTANCE (FT)	FIRE RESISTANCE RATING (HRS.)
LESS THAN 5 FT.	1
GREATER THAN OR EQUAL TO 5 FT. LESS THAN 10 FT.	1
GREATER THAN OR EQUAL TO 10 FT. LESS THAN 20 FT.	0
GREATER THAN OR EQUAL TO 20 FT. LESS THAN 30 FT.	0
GREATER THAN 30 FT.	0

TABLE IS BASED UPON IBC TABLE 602

HUGHES ASSOCIATES, INC.
FIRE PROTECTION ENGINEERS
CODE CONSULTANTS
303 East Par Street
Orlando, FL 32804
Phone 407-647-3737
FAX 407-647-4929
www.haifire.com
HAI Inc.
EB-0007927
Project No.: 1HRB00104

SYM	DESCRIPTION	DATE	APPR

NAVFAC

ANDERSON DRACE
JOINT VENTURE

HAMID R. BAHADORI
LICENSED PROFESSIONAL ENGINEER
16984
STATE OF MISSISSIPPI
SEAL

EGH ARCHITECTS
eleyguildhardy.com
A/E INFO

APPROVED

FOR COMMANDER NAVFAC

ACTIVITY

SATISFACTORY TO DATE JAN 17, 2012

DES	CGB	DRW	CGB	CHK	HRB

DEPARTMENT OF THE NAVY
NAVAL FACILITIES ENGINEERING COMMAND
IPT GULFCOAST
CORRY STATION

NAVAL FACILITIES ENGINEERING COMMAND SOUTHEAST
NAVAL AIR STATION JACKSONVILLE, FL
PENSACOLA, FLORIDA

BUILDING P-724 Corry "A" School BEQ
REVISED [2+0] MODULE DESIGN

LIFE SAFETY NOTES

SCALE: AS INDICATED
EPROJECT NO.: 10-045
CONSTR. CONTR. NO. N69450-10-C-0755
NAVFAC DRAWING NO. 15050349
SHEET 4 OF 204
LS001

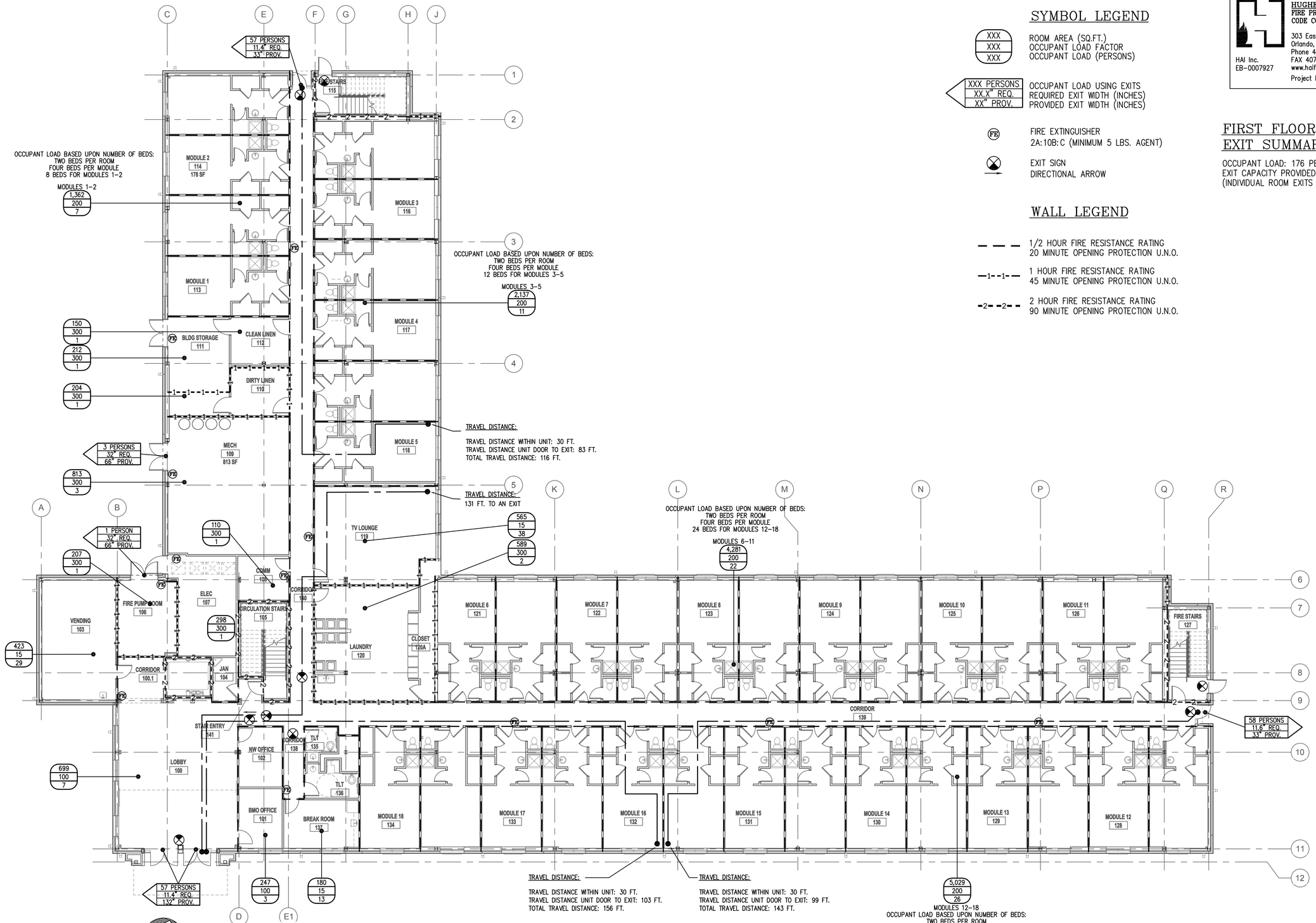

1 FIRST FLOOR LIFE SAFETY PLAN
SCALE: 3/32" = 1'-0"

SCALE 3/32"=1'-0"

SYMBOL LEGEND

XXX / XXX / XXX	ROOM AREA (SQ.FT.) OCCUPANT LOAD FACTOR OCCUPANT LOAD (PERSONS)
XXX PERSONS / XX.X" REQ. / XX" PROV.	OCCUPANT LOAD USING EXITS REQUIRED EXIT WIDTH (INCHES) PROVIDED EXIT WIDTH (INCHES)
FE	FIRE EXTINGUISHER 2A:10B:C (MINIMUM 5 LBS. AGENT)
	EXIT SIGN DIRECTIONAL ARROW

WALL LEGEND

— — —	1/2 HOUR FIRE RESISTANCE RATING 20 MINUTE OPENING PROTECTION U.N.O.
—1—1—	1 HOUR FIRE RESISTANCE RATING 45 MINUTE OPENING PROTECTION U.N.O.
-2- -2-	2 HOUR FIRE RESISTANCE RATING 90 MINUTE OPENING PROTECTION U.N.O.

FIRST FLOOR EXIT SUMMARY

OCCUPANT LOAD: 176 PERSONS
EXIT CAPACITY PROVIDED: 990 PERSONS
(INDIVIDUAL ROOM EXITS NOT INCLUDED)

HUGHES ASSOCIATES, INC.
FIRE PROTECTION ENGINEERS
CODE CONSULTANTS
303 East Par Street
Orlando, FL 32804
Phone 407-647-3737
FAX 407-647-4929
www.haifire.com
HAI Inc.
EB-0007927
Project No.: 1HRB00104

SYM	DESCRIPTION	DATE	APPR

NAVFAC

ANDERSON DRACE
JOINT VENTURE

HAMID R. BAHADORI
LICENSED PROFESSIONAL ENGINEER
16984
STATE OF MISSISSIPPI
SEAL

EGH ARCHITECTS
eleyguildhardy.com
A/E INFO

APPROVED
FOR COMMANDER NAVFAC
ACTIVITY
SATISFACTORY TO DATE JAN 17, 2012
DES CGB DRW CGB CHK HRB

DEPARTMENT OF THE NAVY
NAVAL FACILITIES ENGINEERING COMMAND
(PT GULFCOAST)
CORRY STATION
NAVAL FACILITIES ENGINEERING COMMAND SOUTHEAST
NAVAL AIR STATION JACKSONVILLE, FL
PENSACOLA, FLORIDA

BUILDING P-724 Corry "A" School BEQ
REVISED [2+0] MODULE DESIGN

GROUND LEVEL LIFE SAFETY PLAN

SCALE: AS INDICATED
EPROJECT NO.: 10-045
CONSTR. CONTR. NO. N69450-10-C-0755
NAVFAC DRAWING NO. 15050350
SHEET 5 OF 204

LS101

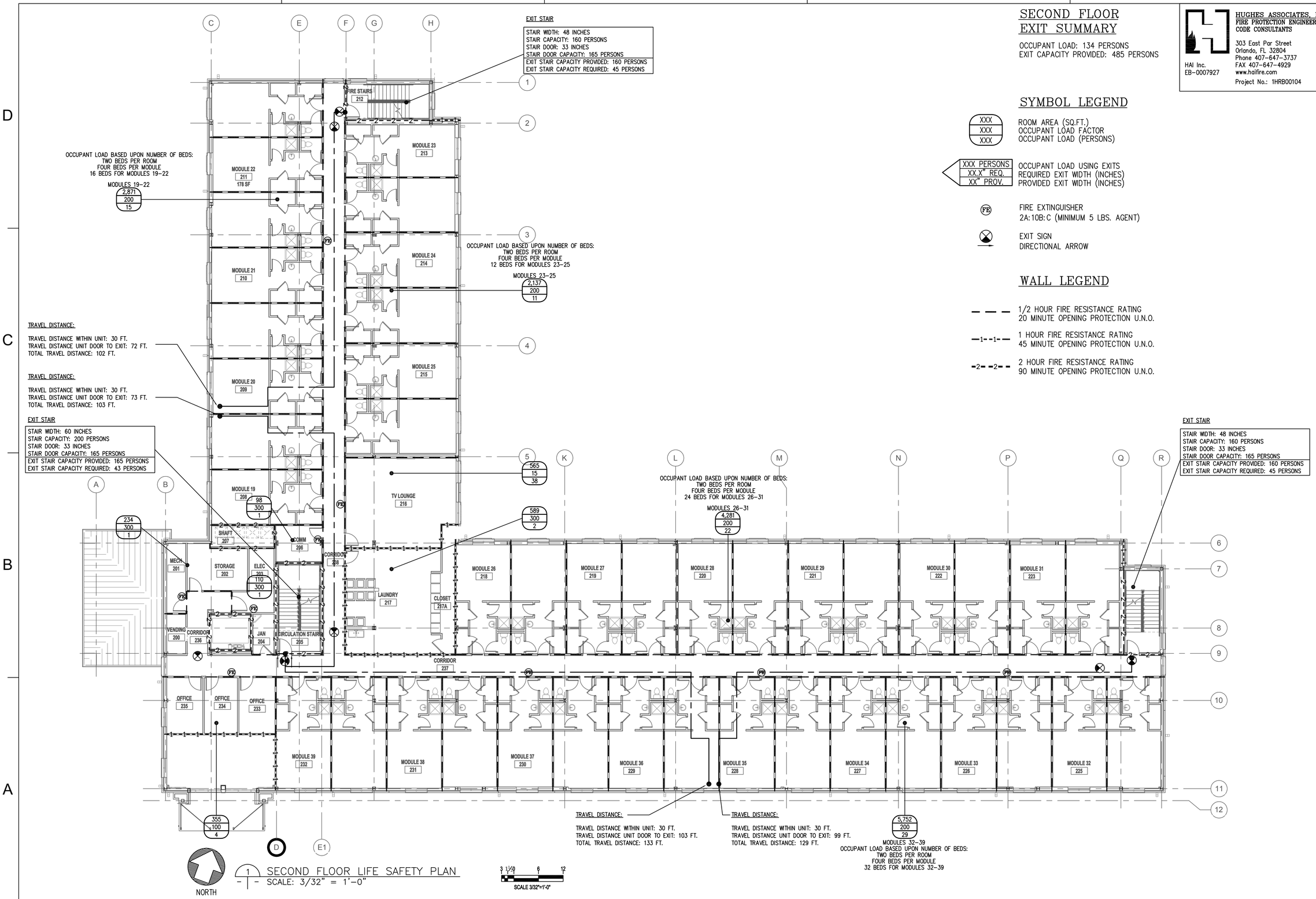

1 SECOND FLOOR LIFE SAFETY PLAN
SCALE: 3/32" = 1'-0"

SECOND FLOOR EXIT SUMMARY

OCCUPANT LOAD: 134 PERSONS
EXIT CAPACITY PROVIDED: 485 PERSONS

SYMBOL LEGEND

XXX / XXX / XXX	ROOM AREA (SQ.FT.) OCCUPANT LOAD FACTOR OCCUPANT LOAD (PERSONS)
XXX PERSONS / XX.X" REQ. / XX" PROV.	OCCUPANT LOAD USING EXITS REQUIRED EXIT WIDTH (INCHES) PROVIDED EXIT WIDTH (INCHES)
FE	FIRE EXTINGUISHER 2A:10B:C (MINIMUM 5 LBS. AGENT)
	EXIT SIGN DIRECTIONAL ARROW

WALL LEGEND

— — —	1/2 HOUR FIRE RESISTANCE RATING 20 MINUTE OPENING PROTECTION U.N.O.
—1- -1- —	1 HOUR FIRE RESISTANCE RATING 45 MINUTE OPENING PROTECTION U.N.O.
-2- -2- -	2 HOUR FIRE RESISTANCE RATING 90 MINUTE OPENING PROTECTION U.N.O.

HUGHES ASSOCIATES, INC.
FIRE PROTECTION ENGINEERS
CODE CONSULTANTS
303 East Par Street
Orlando, FL 32804
Phone 407-647-3737
FAX 407-647-4929
www.haifire.com
HAI Inc.
EB-0007927

Project No.: 1HRB00104

SYM	DESCRIPTION	DATE	APPR

NAVFAC

ANDERSON DRACE JOINT VENTURE

HAMID R. BAHADORI LICENSED PROFESSIONAL ENGINEER 16984 STATE OF MISSISSIPPI SEAL

EGH ARCHITECTS eleyguildhardy.com A/E INFO

APPROVED

FOR COMMANDER NAVFAC

ACTIVITY

SATISFACTORY TO DATE JAN 17, 2012

DES CGB DRW CGB CHK HRB

DEPARTMENT OF THE NAVY
NAVAL FACILITIES ENGINEERING COMMAND
IPT GULFCOAST
CORRY STATION

NAVAL FACILITIES ENGINEERING COMMAND SOUTHEAST
NAVAL AIR STATION JACKSONVILLE, FL
PENSACOLA, FLORIDA

BUILDING P-724 Corry "A" School BEQ
REVISED [2+0] MODULE DESIGN

SECOND FLOOR LIFE SAFETY PLAN

SCALE: AS INDICATED
EPROJECT NO.: 10-045
CONSTR. CONTR. NO. N69450-10-C-0755
NAVFAC DRAWING NO. 15050351
SHEET 6 OF 204

LS102

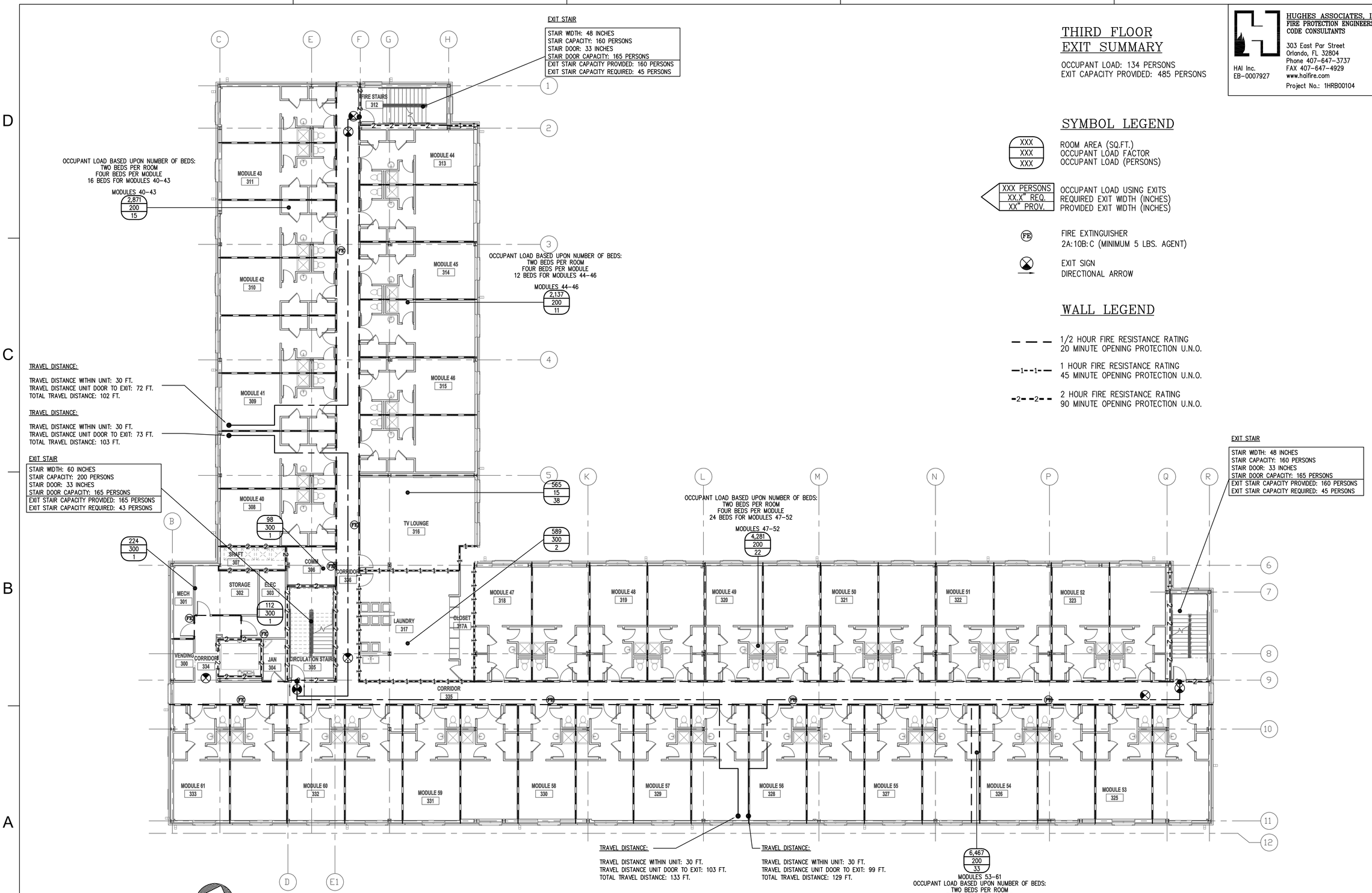

THIRD FLOOR EXIT SUMMARY

OCCUPANT LOAD: 134 PERSONS
EXIT CAPACITY PROVIDED: 485 PERSONS

SYMBOL LEGEND

XXX / XXX / XXX — ROOM AREA (SQ.FT.) / OCCUPANT LOAD FACTOR / OCCUPANT LOAD (PERSONS)

XXX PERSONS / XX.X" REQ. / XX" PROV. — OCCUPANT LOAD USING EXITS / REQUIRED EXIT WIDTH (INCHES) / PROVIDED EXIT WIDTH (INCHES)

FE — FIRE EXTINGUISHER 2A:10B:C (MINIMUM 5 LBS. AGENT)

EXIT SIGN DIRECTIONAL ARROW

WALL LEGEND

1/2 HOUR FIRE RESISTANCE RATING
20 MINUTE OPENING PROTECTION U.N.O.

1 HOUR FIRE RESISTANCE RATING
45 MINUTE OPENING PROTECTION U.N.O.

2 HOUR FIRE RESISTANCE RATING
90 MINUTE OPENING PROTECTION U.N.O.

HUGHES ASSOCIATES, INC.
FIRE PROTECTION ENGINEERS
CODE CONSULTANTS
303 East Par Street
Orlando, FL 32804
Phone 407-647-3737
FAX 407-647-4929
www.haifire.com
HAI Inc.
EB-0007927
Project No.: 1HRB00104

SYM	DESCRIPTION	DATE	APPR

NAVFAC

ANDERSON DRACE JOINT VENTURE

HAMID R. BAHADORI LICENSED PROFESSIONAL ENGINEER 16984 STATE OF MISSISSIPPI
SEAL

EGH ARCHITECTS
eleyguildhardy.com
A/E INFO

APPROVED

FOR COMMANDER NAVFAC

ACTIVITY

SATISFACTORY TO DATE JAN 17, 2012

DES	CGB	DRW	CGB	CHK	HRB

DEPARTMENT OF THE NAVY
NAVAL FACILITIES ENGINEERING COMMAND SOUTHEAST
IPT GULFCOAST
CORRY STATION

NAVAL FACILITIES ENGINEERING COMMAND
NAVAL AIR STATION JACKSONVILLE, FL

PENSACOLA, FLORIDA

BUILDING P-724 Corry "A" School BEQ
REVISED [2+0] MODULE DESIGN

THIRD FLOOR LIFE SAFETY PLAN

SCALE: AS INDICATED
EPROJECT NO.: 10-045
CONSTR. CONTR. NO. N69450-10-C-0755
NAVFAC DRAWING NO. 15050352
SHEET 7 OF 204
LS103

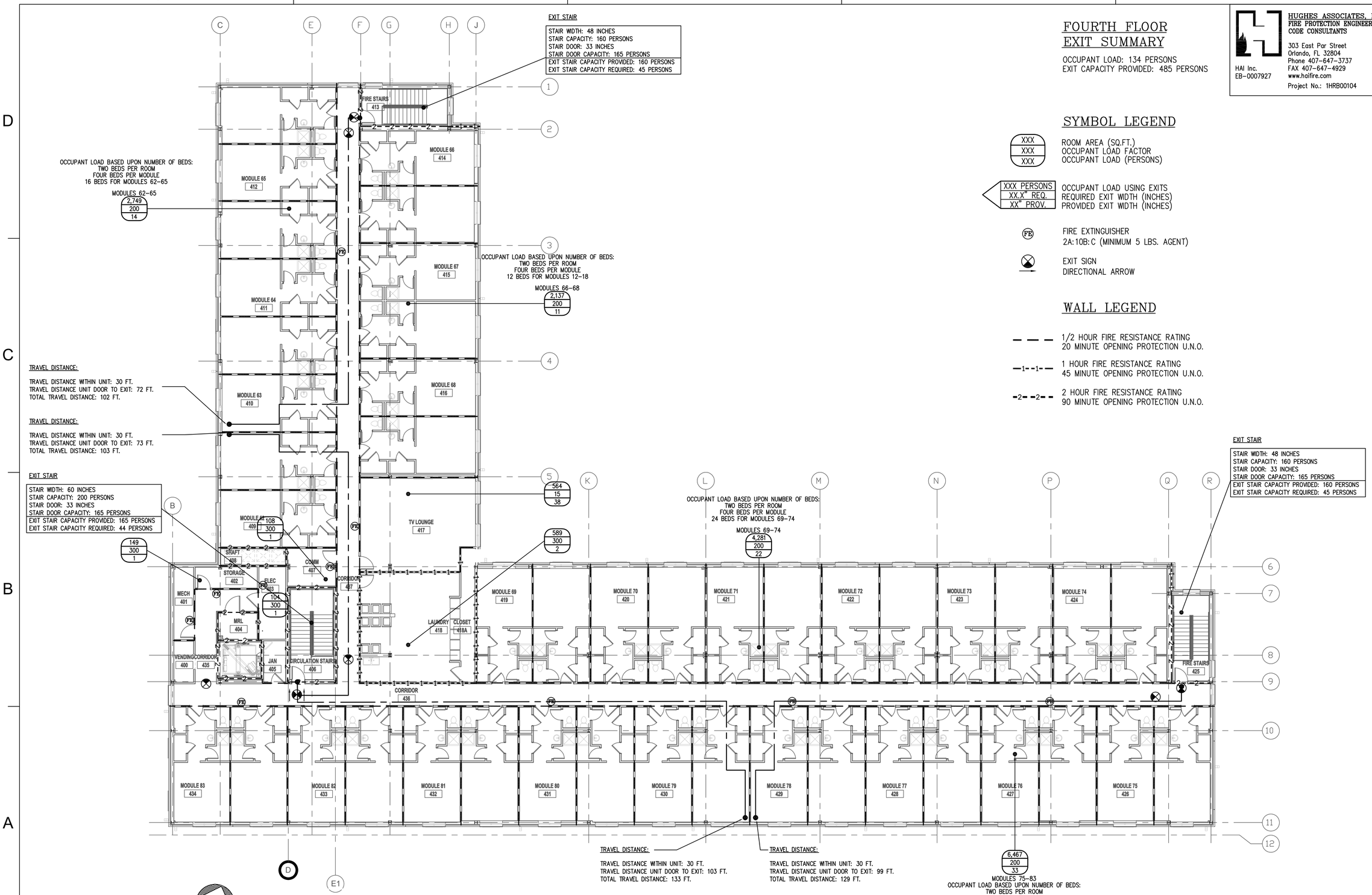

1 FOURTH FLOOR LIFE SAFETY PLAN
SCALE: 3/32" = 1'-0"

FOURTH FLOOR EXIT SUMMARY

OCCUPANT LOAD: 134 PERSONS
EXIT CAPACITY PROVIDED: 485 PERSONS

SYMBOL LEGEND

XXX / XXX / XXX	ROOM AREA (SQ.FT.) OCCUPANT LOAD FACTOR OCCUPANT LOAD (PERSONS)
XXX PERSONS / XX.X" REQ. / XX" PROV.	OCCUPANT LOAD USING EXITS REQUIRED EXIT WIDTH (INCHES) PROVIDED EXIT WIDTH (INCHES)
FE	FIRE EXTINGUISHER 2A:10B:C (MINIMUM 5 LBS. AGENT)
	EXIT SIGN DIRECTIONAL ARROW

WALL LEGEND

— — —	1/2 HOUR FIRE RESISTANCE RATING 20 MINUTE OPENING PROTECTION U.N.O.
—1- -1- —	1 HOUR FIRE RESISTANCE RATING 45 MINUTE OPENING PROTECTION U.N.O.
-2- -2- -	2 HOUR FIRE RESISTANCE RATING 90 MINUTE OPENING PROTECTION U.N.O.

HUGHES ASSOCIATES, INC.
FIRE PROTECTION ENGINEERS
CODE CONSULTANTS
303 East Par Street
Orlando, FL 32804
Phone 407-647-3737
FAX 407-647-4929
www.haifire.com
HAI Inc.
EB-0007927

Project No.: 1HRB00104

SYM	DESCRIPTION	DATE	APPR

NAVFAC

ANDERSON DRACE
JOINT VENTURE

HAMID R. BAHADORI
LICENSED PROFESSIONAL ENGINEER
16984
STATE OF MISSISSIPPI
SEAL

EGH ARCHITECTS
eleyguildhardy.com
A/E INFO

APPROVED
FOR COMMANDER NAVFAC
ACTIVITY
SATISFACTORY TO DATE JAN 17, 2012
DES CGB DRW CGB CHK HRB

DEPARTMENT OF THE NAVY
NAVAL FACILITIES ENGINEERING COMMAND
IPT GULFCOAST
CORRY STATION
NAVAL FACILITIES ENGINEERING COMMAND SOUTHEAST
NAVAL AIR STATION JACKSONVILLE, FL
PENSACOLA, FLORIDA

BUILDING P-724 Corry "A" School BEQ
REVISED [2+0] MODULE DESIGN

FOURTH FLOOR LIFE SAFETY PLAN

SCALE: AS INDICATED
EPROJECT NO.: 10-045
CONSTR. CONTR. NO. N69450-10-C-0755
NAVFAC DRAWING NO. 15050353
SHEET 8 OF 204
LS104

CAUTION: GAS & FUEL OIL PIPES EXIST ON OR NEAR PROJECT SITE.

NOTE: COORDINATE WITH DEMOLITION PLAN FOR UTILITY REMOVAL.

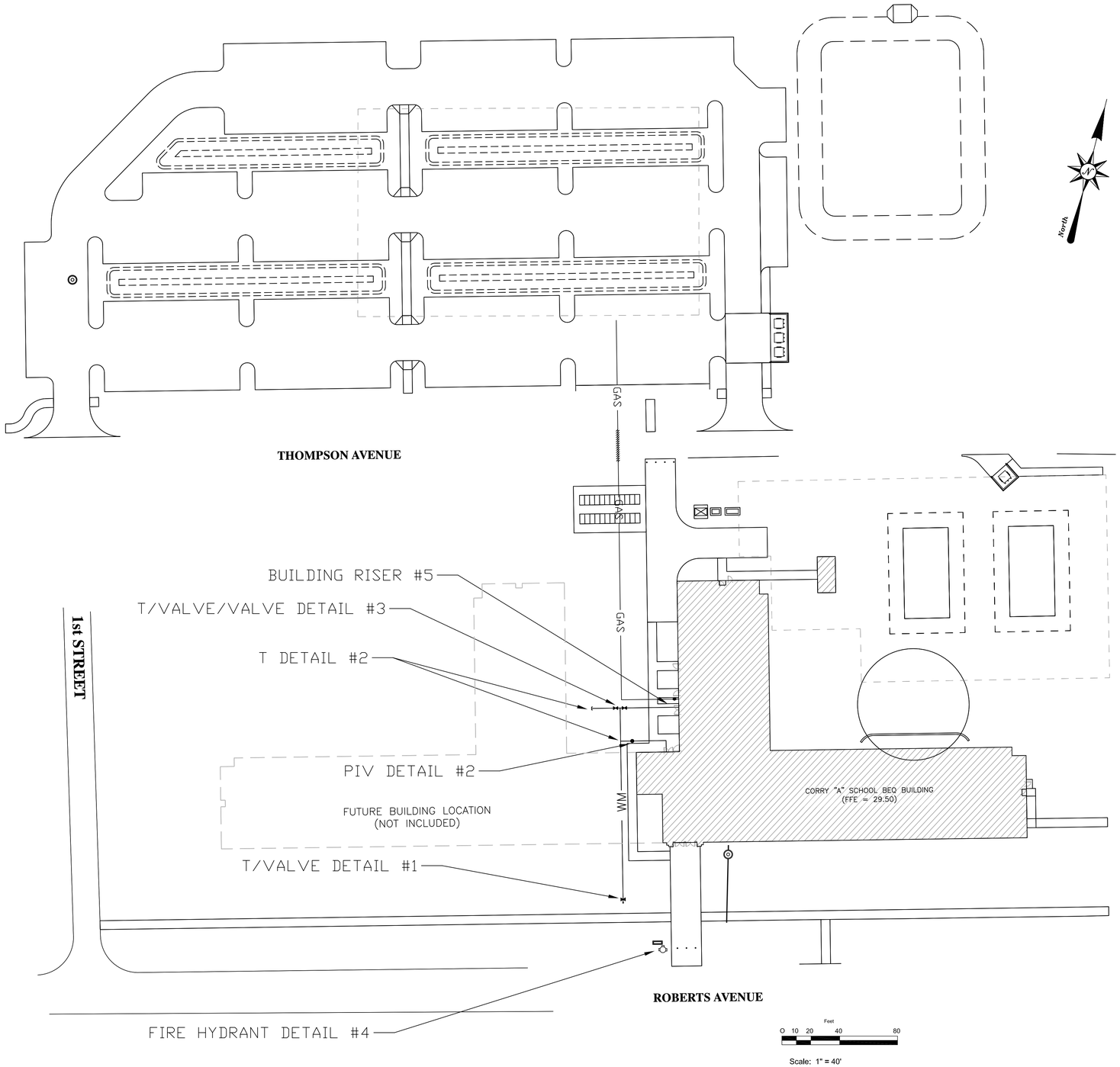

SYM	DESCRIPTION	DATE	APPR.

NAVFAC

ANDERSON DRACE JOINT VENTURE

JOEL F. MAGGART CORROSION SPECIALIST

SEAL

EGH ARCHITECTS
eleyguildhardy.com
A/E INFO

APPROVED

FOR COMMANDER NAVFAC

ACTIVITY

SATISFACTORY TO DATE JAN 19, 2012

DES JFM | DRW NAW | CHK JFM

NAVAL FACILITIES ENGINEERING COMMAND
NAVAL AIR STATION JACKSONVILLE, FL

DEPARTMENT OF THE NAVY
NAVAL FACILITIES ENGINEERING COMMAND SOUTHEAST
IPT GULF COAST
CORRY STATION
PENSACOLA, FLORIDA

BUILDING P-724 Corry "A" School BEQ
REVISED [2+0] MODULE DESIGN

CATHODIC PROTECTION LAYOUT

SCALE: AS INDICATED

EPROJECT NO.: 10-045

CONSTR. CONTR. NO.
N69450-10-C-0755

NAVFAC DRAWING NO.
150050354

SHEET 9 OF 204

CP1

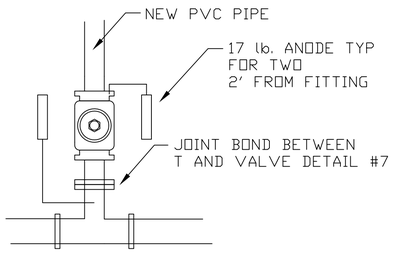

T/VALVE DETAIL # 1

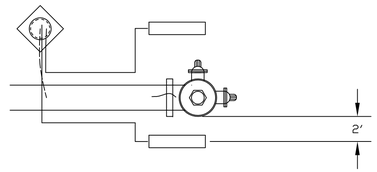

FIRE HYDRANT DETAIL PLAN VIEW DETAIL #4

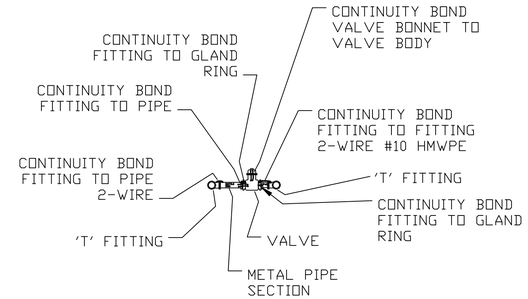

TYPICAL CONTINUITY BONDING DETAIL ELEVATION DETAIL #6

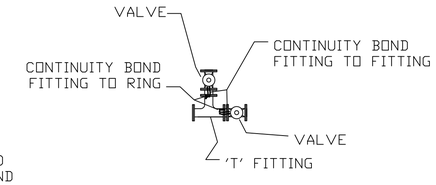

TYPICAL CONTINUITY BONDING DETAIL PLAN DETIAL #6

INSTALL TWO CONTINUITY BONDS AT EACH (ALL) MECHANICAL JOINTS INCLUDING BUT NOT LIMITED TO THE FOLLOWING:
A. VALVE BODY TO VALVE BONNET
B. FITTING TO FITTING WITHIN 5' DISTANCE
C. FITTING TO GLAND RING OR MECHANICAL JOINT PLATE.
D. FITTING TO METALLIC PIPE.
DO NOT BOND ACROSS FLANGE ISOLATION FITTINGS.
E. #8 NMWPE JOINT BOND WIRE FOR ALL.

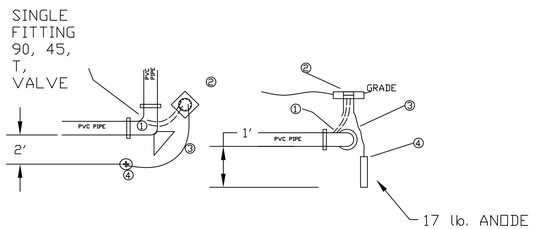

SINGLE FITTING DETAIL #2 FOR VALVES, 45 & 90 DEG ELLS AND T'S

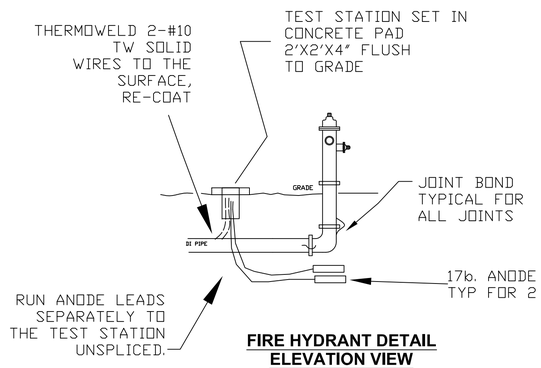

FIRE HYDRANT DETAIL ELEVATION VIEW DETAIL #4

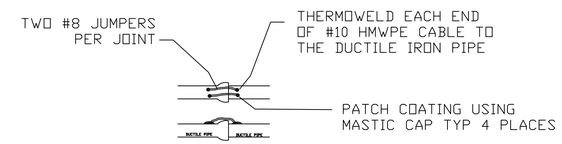

JOINT DETAIL TYPICAL FOR ALL MECHANICAL JOINTS DETAIL #7

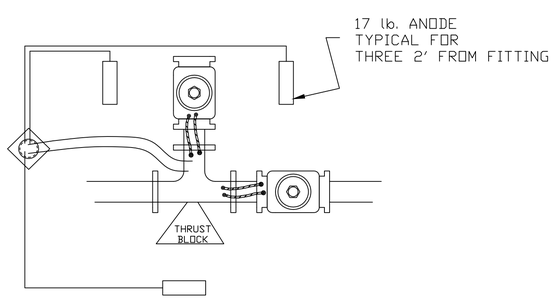

T/VALVE/VALVE DETAIL # 3
TYPICAL FOR ALL MULTIPLE FITTINGS

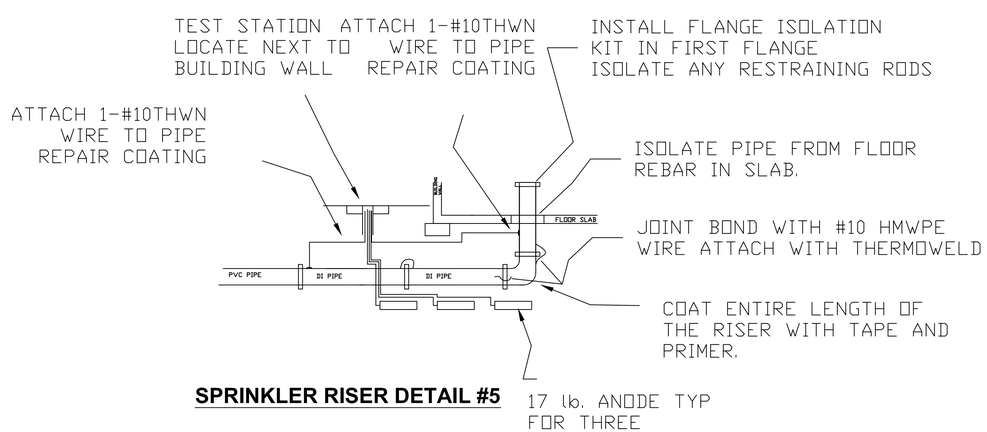

SPRINKLER RISER DETAIL #5

1. THERMOWELD 2-#10 TW WHITE LEAD WIRES TO THE FITTING, REPAIR COATING
   WITH WELD SHIELD C3. RUN ANODE LEADS #12 TW TO TEST STATION UNSPLICED.
2. INSTALL ANODE AS SHOWN, SOAK WITH 5 GALLONS OF WATER AFTER PARTIAL
   BACKFILL. ANODE MAY BE LAID HORIZONTALLY IF NEEDED A MINIMUM OF 4' DEEP.
3. TOP OF ANODE SHOULD BE APPROXIMATELY EVEN WITH CENTER LINE OF
   PIPE OR A MINIMUM OF 4' DEEP WHICHEVER IS DEEPER.
4. ANODE LEAD WIRE DIRECTLY CONNECTS TO PIPE

MAGGART & ASSOCIATES INC
5002 D NORTH ROYAL ATLANTA DRIVE
TUCKER, GA 30084

SYM	DESCRIPTION	DATE	APPR.

NAVFAC

ANDERSON DRACE JOINT VENTURE

JOEL F. MAGGART CORROSION SPECIALIST

SEAL

EGH ARCHITECTS
eleyguildhardy.com
A/E INFO

APPROVED

FOR COMMANDER NAVFAC

ACTIVITY

SATISFACTORY TO DATE JAN 19, 2012

DES	DRW	CHK
JFM	NAW	JFM

DEPARTMENT OF THE NAVY
NAVAL FACILITIES ENGINEERING COMMAND
IPT GULF COAST
NAVAL FACILITIES ENGINEERING COMMAND SOUTHEAST
NAVAL AIR STATION JACKSONVILLE, FL
CORRY STATION
PENSACOLA, FLORIDA

BUILDING P-724 Corry "A" School BEQ
REVISED [2+0] MODULE DESIGN

CATHODIC PROTECTION DETAILS

SCALE: AS INDICATED
EPROJECT NO.: 10045
CONSTR. CONTR. NO. N69450-10-C-0755
NAVFAC DRAWING NO. 15050355
SHEET 10 OF 204

CP2

TOPOGRAPHIC SURVEY

CORRY "A" SCHOOL BEQ P724
PROPOSED BEQ SITE
CORRY STATION
PENSACOLA
ESCAMBIA COUNTY, FLORIDA

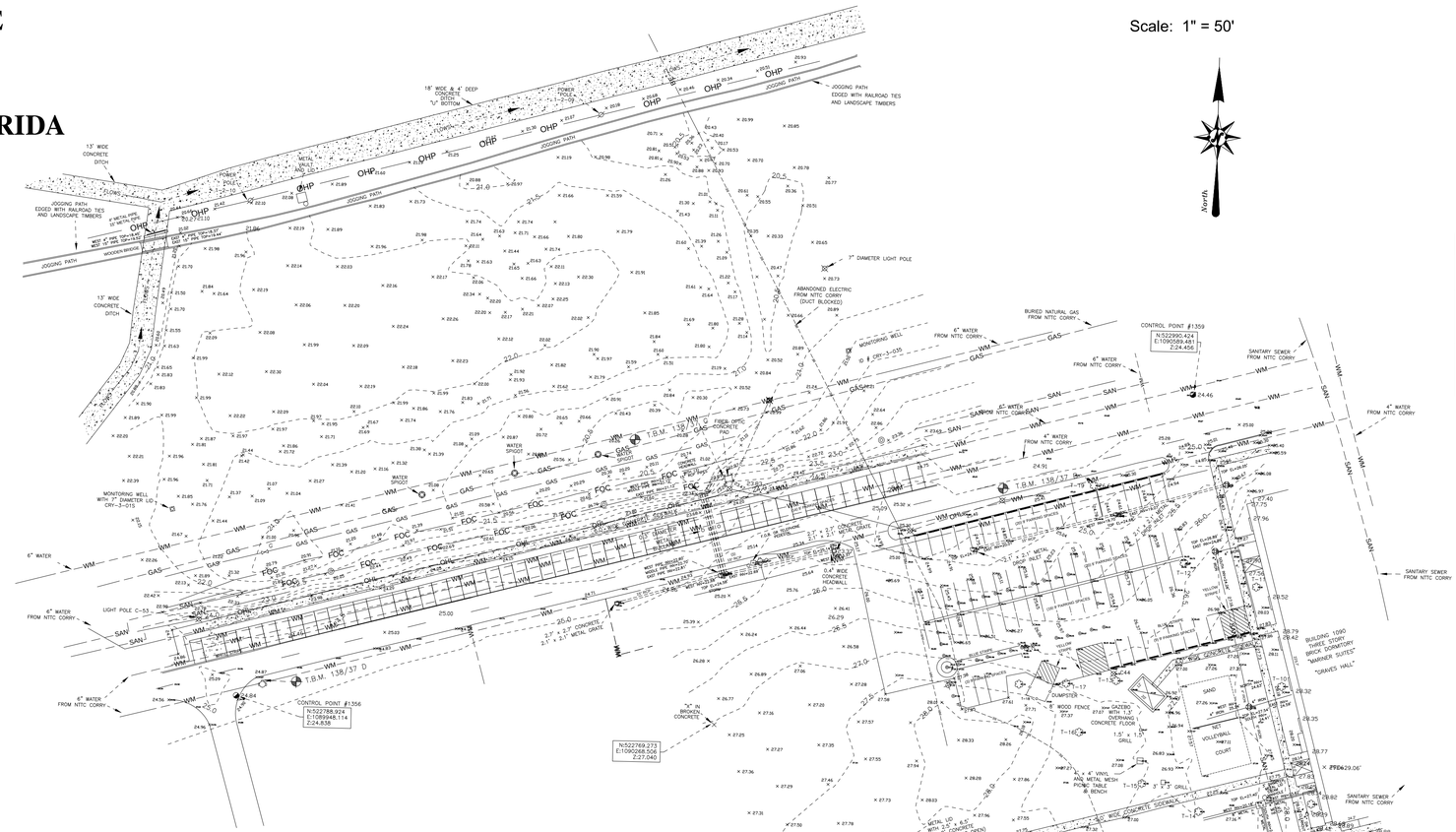

SURVEYOR'S REPORT:

1. ELEVATION FOR TEMPORARY BENCHMARKS AND TOPOGRAPHIC SURVEY REFERENCED TO BRONZE DISK AT THE MAIN ENTRANCE TO NAS CORRY FIELD, IN THE EAST WALL OF BRICK SENTRY BUILDING, 24 FEET SOUTH OF THE CENTERLINE OF THE ENTRANCE ROAD, AND ABOUT 4 FEET ABOVE THE GROUND. DISK STAMPED "H 111, 1945." ELEVATION 35.35' NORTH AMERICAN VERTICAL DATUM OF 1988 (NAVD 88).

2. BENCHMARKS (B.M.):
A. T.B.M. 138/37 A "X" CUT ON THE NORTHWEST CORNER OF A 3.0' x 8.0' CONCRETE BUILDING SIGN PAD. (MARINER'S SUITES, BUILDING 1090). SIGN IS LOCATED ±36 FEET WEST OF THE SOUTHWEST CORNER OF BUILDING 1090. ELEVATION: 28.32' (NAVD 88).
B. T.B.M. 138/37 B IS A COTTON SPINDLE SET IN THE SOUTH SIDE OF A 22" PINE TREE LOCATED ±7.0 FEET SOUTH OF THE SOUTH EDGE OF PAVEMENT OF THOMPSON AVENUE AND ±55 FEET FROM THE WESTERN SIDE OF THE NORTH ENTRANCE INTO BUILDING 1090 PARKING LOT AND ±3.0 FEET NORTH OF THE NORTH EDGE OF THE PARKING LOT. ELEVATION: 26.71' (NAVD 88).
C. T.B.M. 138/37 C THE NORTHWEST CORNER OF A NEW CONCRETE FIBER OPTICS BOX, 5.0' x 4.0', LOCATED ON THE SOUTHSIDE OF THE PROPOSED BEQ SITE, ±8.0 FEET NORTH OF THE NORTH EDGE OF THE SIDEWALK AND ±5.0 FEET NORTH OF A LAMP POST MARKED "# C-52". ELEVATION: 23.87' (NAVD 88).
D. T.B.M. 138/37 D THE NORTH BONNETT BOLT OF A YELLOW FIRE HYDRANT MARKED "D - 4 - 7", LOCATED ±5.0 FEET SOUTH OF THE SOUTH EDGE OF PAVEMENT OF THOMPSON AVENUE AND ±13 FEET EAST OF THE EDGE OF PAVEMENT OF 1st STREET. ELEVATION: 27.37' (NAVD 88).

3. THE UNDERGROUND UTILITIES SHOWN HAVE BEEN LOCATED FROM FIELD SURVEY INFORMATION AND EXISTING DRAWINGS. THE SURVEYOR HAS NOT PHYSICALLY LOCATED THE UNDERGROUND UTILITIES. THE SURVEYOR DOES NOT CERTIFY THAT THE UNDERGROUND UTILITIES SHOWN ARE IN THE EXACT LOCATION AS INDICATED, OR THE UNDERGROUND UTILITIES COMPRISE ALL SUCH UTILITIES.

4. THIS SURVEY DOES NOT REFLECT OR DETERMINE OWNERSHIP.

5. TO ASSURE THE CONTRACTOR IS ON THE SAME VERTICAL AND HORIZONTAL DATUM AS THIS SURVEY, IT IS STRONGLY RECOMMENDED THAT VERTICAL CHECKS BE MADE BETWEEN TWO BENCH MARKS AND THAT HORIZONTAL CHECKS BE MADE BETWEEN THREE CONTROL POINTS OR PROPERTY CORNERS.

6. CALL SUNSHINE ONE UTILITY LOCATERS AT (800) 432-4770 BEFORE DIGGING.

7. BURIED UTILITIES WERE GROUND SPOTTED BY N.A.S. PENSACOLA PUBLIC WORKS DEPARTMENT. BOB NICHOLS, PHONE (850) 452-5525 (EXT. 3339).

8. NO FIBER OPTICS WERE LOCATED.

9. STATE PLANE COORDINATES ARE REFERENCED TO ESC 4114, ESC 4113 & ESC 4112.
NORTH AMERICAN DATUM 1983 (NAD 83).

10. BURIED UTILITIES LABELED "FROM NTTC CORRY" WERE NOT FIELD VERIFIED. THE PLOTTED LOCATIONS WERE EXTRACTED FROM BURIED UTILITY DRAWINGS FURNISHED BY RICK KENSELL OF N.A.S. PUBLIC WORKS DEPARTMENT, PHONE (850) 452-5525. THEIR LOCATION IS APPROXIMATE. IF THEY EXIST OR NOT IS NOT KNOWN. THESE UTILITIES FORMERLY SERVICED SEVERAL BUILDINGS WHICH HAVE BEEN TORN DOWN.
IN THE ELECTRONIC FILE THESE UTILITIES ARE ALL MAGENTA IN COLOR.

FOR INFORMATIONAL PURPOSES ONLY

ON-SITE CONTROL POINTS

CONTROL POINT #1356		
N:522788.924	E:1089948.114	Z:24.838
CONTROL POINT #1357		
N:522507.919	E:1090351.279	Z:29.364
CONTROL POINT #1358		
N:522625.937	E:1090676.749	Z:28.855
CONTROL POINT #1359		
N:522990.424	E:1090589.481	Z:24.456

OFF SITE STATE PLANE CO-ORDINATE REFERENCE MARKERS

CONCRETE MONUMENT & DISK ESC 4112	N:518342.600 E:1102572.140 Z:11.745
CONCRETE MONUMENT & DISK ESC 4113	N:513266.460 E:1083491.870 Z:19.780

TREE DATA TABLE

TREE NUMBER	DIAMETER (IN INCHES)	TREE TYPE
T-1	23"	LIVE OAK
T-2	25"	LIVE OAK
T-3	40"	LIVE OAK
T-4	20"	LIVE OAK
T-5	30"	LIVE OAK
T-6	20"	LIVE OAK
T-7	24"	LIVE OAK
T-8	27"	LIVE OAK
T-9	16"	PALM
T-10	16"	PALM
T-11	16"	LIVE OAK
T-12	15"	PINE
T-13	18"	LAUREL OAK
T-14	16"	PINE
T-15	18"	LAUREL OAK
T-16	48"	LIVE OAK
T-17	18"	PINE
T-18	18"	PINE
T-19	22"	PINE (TBM 138/37B)

UTILITY COMPANIES:
UTILITY INFORMATION FURNISHED BY:

NATURAL GAS
ENERGY SERVICES OF PENSACOLA (E.S.P.)
1625 ATWOOD DRIVE, PENSACOLA, FLORIDA 32514
(850) 474 5317

ELECTRIC
GULF POWER COMPANY
9220 PINE FOREST ROAD, PENSACOLA, FLORIDA 32534
(850) 429-2611

SANITARY SEWER & WATER
ESCAMBIA COUNTY UTILITY AUTHORITY
ELLISON INDUSTRIAL PARK, PENSACOLA, FLORIDA 32504
(850) 969-3310

SYM	DESCRIPTION	DATE	APPR

NAVFAC

ANDERSON DRACE JOINT VENTURE

LLOYD SEYMOUR LICENSED PROFESSIONAL ENGINEER 17695 1/19/12 STATE OF MISSISSIPPI — SEAL

EGH ARCHITECTS eleyguildhardy.com A/E INFO

APPROVED

FOR COMMANDER NAVFAC

ACTIVITY

SATISFACTORY TO DATE JAN 17, 2012

DES LES DRW LES CHK KK

DEPARTMENT OF THE NAVY
NAVAL FACILITIES ENGINEERING COMMAND
IPT GULF COAST
CORRY STATION

NAVAL FACILITIES ENGINEERING COMMAND SOUTHEAST
NAVAL AIR STATION JACKSONVILLE, FL
PENSACOLA, FLORIDA

BUILDING P-724 Corry "A" School BEQ
REVISED [2+0] MODULE DESIGN

TOPOGRAPHIC SURVEY

SCALE: AS INDICATED

EPROJECT NO.: 10-045

CONSTR. CONTR. NO. N69450-10-C-0755

NAVFAC DRAWING NO. 15050356

SHEET 11 OF 204

V000

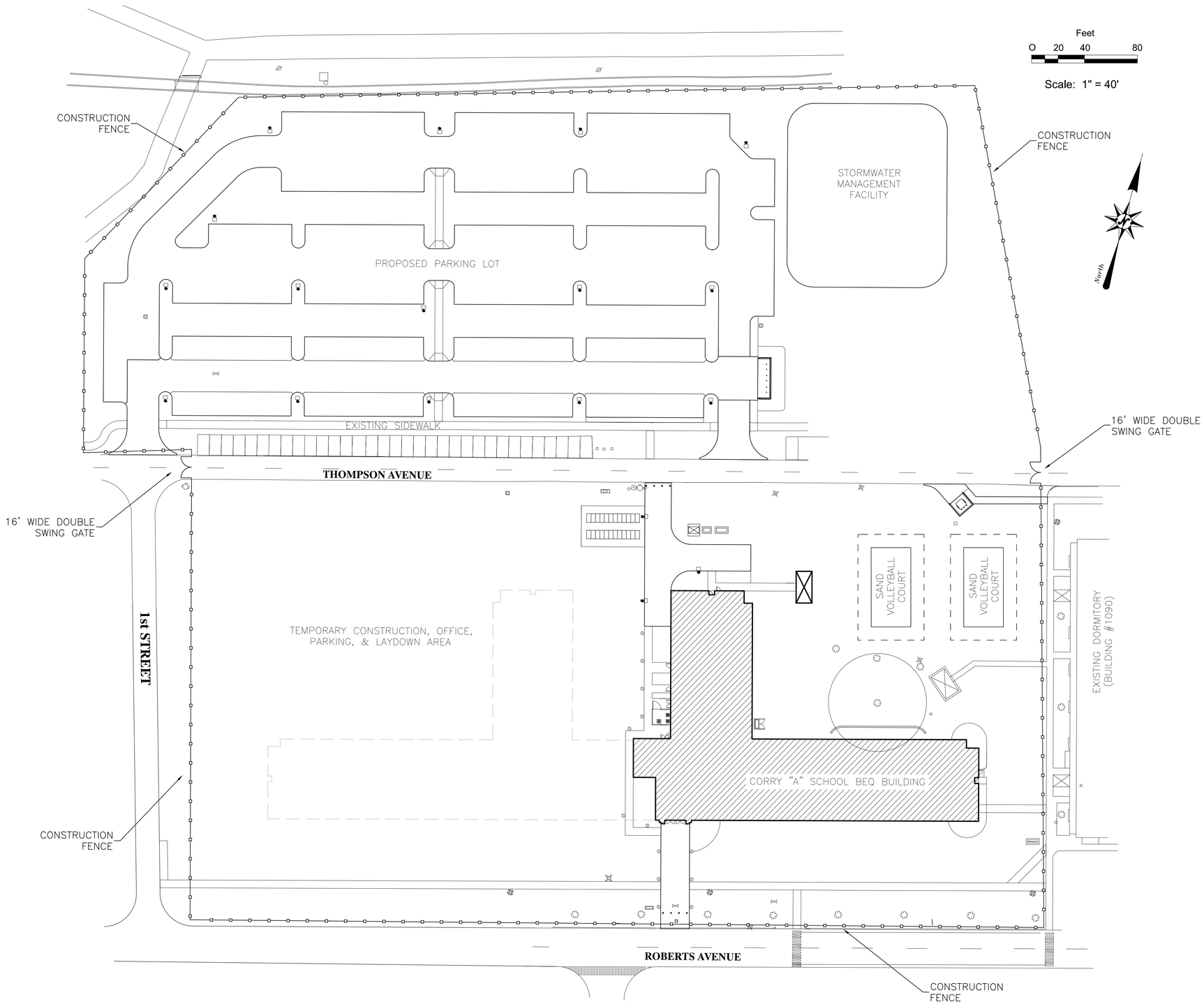

1 C000 CONSTRUCTION LAYOUT PLAN

SYM	DESCRIPTION	DATE	APPR

NAVFAC

ANDERSON DRACE JOINT VENTURE

LLOYD SEYMOUR LICENSED PROFESSIONAL ENGINEER 17695 STATE of MISSISSIPPI 1/19/12

EGH ARCHITECTS eleyguildhardy.com A/E INFO

APPROVED

FOR COMMANDER NAVFAC

ACTIVITY

SATISFACTORY TO DATE JAN 17, 2012

DES LES DRW LES CHK KK

DEPARTMENT OF THE NAVY
NAVAL FACILITIES ENGINEERING COMMAND SOUTHEAST
IPT GULF COAST
NAVAL FACILITIES ENGINEERING COMMAND
NAVAL AIR STATION JACKSONVILLE, FL
CORRY STATION
PENSACOLA, FLORIDA

BUILDING P-724 Corry "A" School BEQ
REVISED [2+0] MODULE DESIGN

CONSTRUCTION LAYOUT PLAN

SCALE: AS INDICATED

EPROJECT NO.: 10-045

CONSTR. CONTR. NO. N69450-10-C-0755

NAVFAC DRAWING NO. 15050357

SHEET 12 OF 204

C000

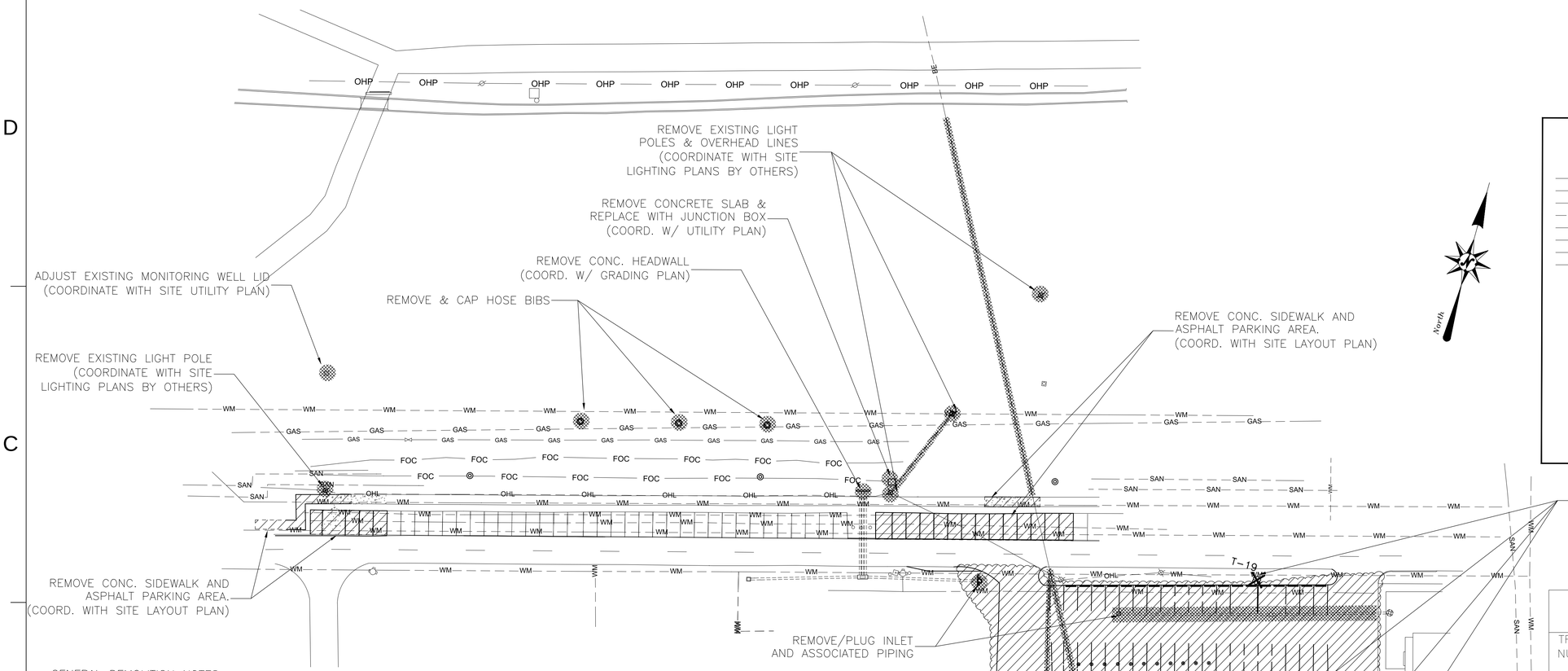

1 C001 SITE DEMOLITION PLAN

Feet
0 20 40 80
Scale: 1" = 40'

LEGEND

SAN	SANITARY SEWER LINE
WM	WATER LINE
GAS	NATURAL GAS LINE
FUEL	FUEL OIL LINE
OHL	OVERHEAD LINE
BE	ABANDONED DUCT BANK
OHP	OVERHEAD POWER
FOC	FIBER OPTIC CABLE LINE
	ITEMS TO BE REMOVED
	UTILITIES TO BE REMOVED
T-15	TREE TO BE REMOVED
	TREES TO BE PROTECTED

TREE DATA TABLE

TREE NUMBER	DIAMETER (IN INCHES)	TREE TYPE
T-1	23"	LIVE OAK
T-2	25"	LIVE OAK
T-3	40"	LIVE OAK
T-4	20"	LIVE OAK
T-5	30"	LIVE OAK
T-6	20"	LIVE OAK
T-7	24"	LIVE OAK
T-8	27"	LIVE OAK
T-9	16"	PALM
T-10	16"	PALM
T-11	16"	LIVE OAK
~~T-12~~	~~15"~~	~~PINE~~
T-13	18"	LAUREL OAK
~~T-14~~	~~18"~~	~~PINE~~
~~T-15~~	~~16"~~	~~LAUREL OAK~~
T-16	48"	LIVE OAK
T-17	18"	PINE
T-18	18"	PINE
~~T-19~~	~~22"~~	~~PINE (TBM 138/37B)~~

GENERAL DEMOLITION NOTES:

1. ADDITIONAL EXISTING UTILITIES MAY EXIST THAT REQUIRE REMOVAL.
2. ALL EXISTING PIPE ENDS SHALL BE PLUGGED OR CAPPED UPON DEMOLITION.
3. MARK LOCATIONS IN FIELD WITH STAKE STATING TYPE, MATERIAL & DEPTH.

ASBESTOS NOTES:

1. DEMOLITION CONTRACTOR SHALL BE RESPONSIBLE FOR FOLLOWING ALL REQUIREMENTS AND WORK PRACTICE STANDARDS OF THE FLORIDA DEPARTMENT OF ENVIRONMENTAL PROTECTION (DEP) ASBESTOS REMOVAL PROGRAM (CHAPTER 62-257).
2. A WRITTEN ASBESTOS SURVEY AND ABATEMENT PLAN SHALL BE PREPARED BY A FLORIDA ASBESTOS CONSULTANT PRIOR TO DEMOLITION ACTIVITIES.
3. DEMOLITION CONTRACTOR SHALL BE RESPONSIBLE FOR COMPLETING THE FLORIDA DEPARTMENT OF ENVIRONMENTAL PROTECTION NOTICE OF DEMOLITION OR ASBESTOS RENOVATION FORM AND SUBMITTING IT TO THE APPROPRIATE DEP DISTRICT OFFICE OR LOCAL POLLUTION CONTROL AGENCY A MINIMUM OF 10 DAYS PRIOR TO THE START OF DEMOLITION WORK.
4. THE CONTRACTOR IS RESPONSIBLE FOR THE DISPOSAL OF ALL ASBESTOS-CONTAINING WASTE AT A PERMITTED ASBESTOS DISPOSAL SITE.

TREE PROTECTION NOTES:

1. MAINTAIN TREE PROTECTION FENCING AS INDICATED ON THE DRAWINGS. SEE SHEET C006, DETAIL 2 FOR FURTHER INFORMATION.
2. DO NOT STORE CONSTRUCTION MATERIALS, DEBRIS, OR EXCAVATED MATERIAL WITHIN THE DRIP LINE OF REMAINING TREES AND PREVENT SOIL COMPACTION OVER ROOT SYSTEMS.
3. WHEN DOING WORK WITHIN THE DRIPLINE OF TREES THE CONTRACTOR SHALL HAVE ALL EQUIPMENT WORKING OFF OF DOUBLE LAYERS OF ¾" PLYWOOD OVER A 12" MINIMUM BASE OF MULCH.
4. PROTECT TREE ROOTS SYSTEMS FROM DAMAGE DUE TO NOXIOUS MATERIALS CAUSED BY RUNOFF OR SPILLAGE WHILE MIXING, PLACING OR STORING CONSTRUCTION MATERIALS. PROTECT ROOT SYSTEMS FROM FLOODING, ERODING OR EXCESSIVE WETTING CAUSED BY DEWATERING OPERATIONS.
5. CONTRACTOR SHALL PROVIDE TEMPORARY IRRIGATION AS REQUIRED BY THE LOCAL ARBORIST TO ENSURE THE HEALTH OF THE TREES TO REMAIN.
6. NO TREE SHALL BE REMOVED OR TRIMMED WITHOUT APPROVAL BY THE LOCAL ARBORIST.

SYM	DESCRIPTION	DATE	APPR

NAVFAC

ANDERSON DRACE JOINT VENTURE

LLOYD SEYMOUR LICENSED PROFESSIONAL ENGINEER 17695 1/19/12 STATE OF MISSISSIPPI

EGH ARCHITECTS
eleyguildhardy.com
A/E INFO

APPROVED
FOR COMMANDER NAVFAC
ACTIVITY
SATISFACTORY TO DATE JAN 17, 2012
DES LES DRW LES CHK KK

DEPARTMENT OF THE NAVY
NAVAL FACILITIES ENGINEERING COMMAND SOUTHEAST
1P7 GULF-COAST
CORRY STATION
NAVAL FACILITIES ENGINEERING COMMAND
NAVAL AIR STATION JACKSONVILLE, FL
PENSACOLA, FLORIDA
BUILDING P-724 Corry "A" School BEQ
REVISED [2+0] MODULE DESIGN
SITE DEMOLITION PLAN

SCALE: AS INDICATED
EPROJECT NO.: 10-045
CONSTR. CONTR. NO. N69450-10-C-0755
NAVFAC DRAWING NO. 15050358
SHEET 13 OF 204
C001

PARKING NOTES:
227 STANDARD SPACES (9'X18')
7 HANDICAP SPACES (8'X18')
16 MOTORCYCLE SPACES (4.5'X12')
(12 STALLS WILL BE DESIGNATED FOR FUEL EFFICIENT VEHICLES TO MEET LEED REQUIREMENTS)

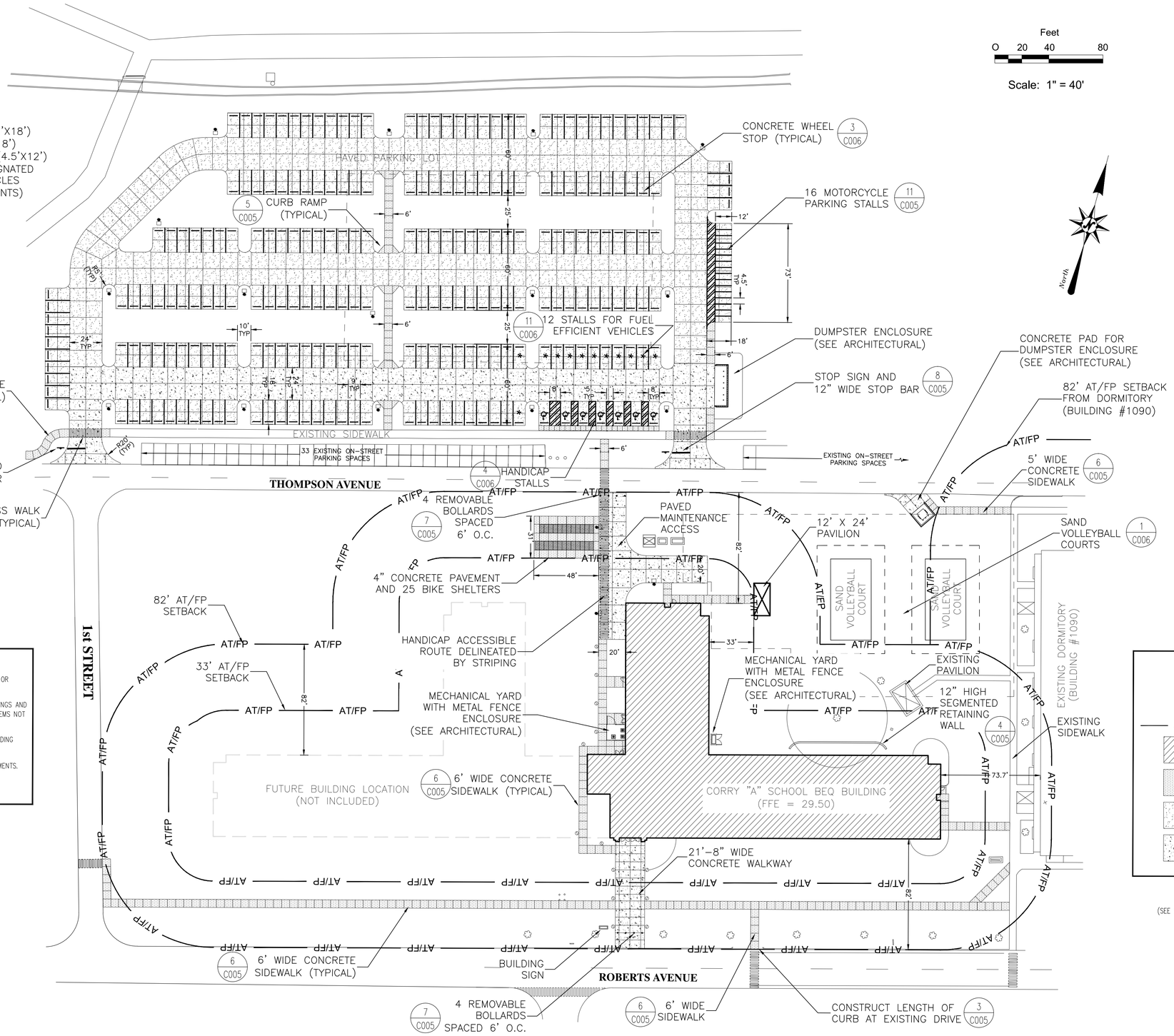

1 C002 SITE LAYOUT PLAN

GENERAL NOTES:

1. ALL MEASUREMENTS ARE FROM FACE OF CURB, EDGE OF PAVEMENT, OR CENTER LINE OF STRIPING.
2. SEE ARCHITECTURAL DRAWINGS FOR INFORMATION RELATIVE TO BUILDINGS AND ASSOCIATED RAMPS, RAILINGS, MECHANICAL PADS, AND/OR OTHER ITEMS NOT DETAILED BY CIVIL.
3. SEE STRUCTURAL DRAWINGS FOR INFORMATION RELATIVE TO THE BUILDING FOUNDATION AND/OR OTHER ITEMS NOT DETAILED BY CIVIL.
4. SEE ELECTRICAL DRAWINGS FOR SITE LIGHTING DETAILS AND REQUIREMENTS.
5. SEE LANDSCAPE PLANS FOR GRASSING REQUIREMENTS.

LEGEND

- EXISTING TREE
- AT/FP — AT/FP SETBACK
- PROPOSED BUILDING
- CONCRETE SIDEWALK PAVEMENT
- MEDIUM DUTY CONCRETE PAVEMENT
- HEAVY DUTY CONCRETE PAVEMENT

(SEE SHEET C005, DETAIL 1 FOR PAVEMENT SECTIONS)

SYM	DESCRIPTION	DATE	APPR

NAVFAC

ANDERSON DRACE JOINT VENTURE

LLOYD SEYMOUR LICENSED PROFESSIONAL ENGINEER 17695 1/19/12 STATE OF MISSISSIPPI

EGH ARCHITECTS eleyguildhardy.com

APPROVED
FOR COMMANDER NAVFAC
ACTIVITY
SATISFACTORY TO DATE JAN 17, 2012
DES LES DRW LES CHK KK

DEPARTMENT OF THE NAVY
NAVAL FACILITIES ENGINEERING COMMAND SOUTHEAST
IPT GULF COAST
CORRY STATION
NAVAL FACILITIES ENGINEERING COMMAND
NAVAL AIR STATION JACKSONVILLE, FL
PENSACOLA, FLORIDA

BUILDING P-724 Corry "A" School BEQ
REVISED [2+0] MODULE DESIGN

SITE LAYOUT PLAN

SCALE: AS INDICATED
EPROJECT NO.: 10-045
CONSTR. CONTR. NO. N69450-10-C-0755
NAVFAC DRAWING NO. 15050359
SHEET 14 OF 204
C002

STORMWATER OPERATION AND MAINTENANCE PLAN

INSPECTIONS

1. A MAINTENANCE INSPECTION MUST BE PERFORMED EVERY THIRD YEAR BY A REGISTERED PROFESSIONAL.
2. THE MAINTENANCE INSPECTION MUST BE DOCUMENTED ON THE FDEP AND/OR NWFWMD STANDARD INSPECTION FORM 62-346.900(8).
3. THE INSPECTION MUST BE SIGNED, SEALED AND DATED BY THE REGISTERED PROFESSIONAL AND SUBMITTED TO EITHER THE FDEP WITHIN 30 DAYS OF THE INSPECTION.
4. THE INSPECTION MUST BE CONDUCTED USING THE PLANS, CALCULATIONS AND SPECIFICATIONS APPROVED BY THE NWFWMD.

PERIODIC POND/SYSTEM MAINTENANCE

1. CLEANING OF PAVEMENT AREAS SHALL BE ACCOMPLISHED WEEKLY OR AS REQUIRED.
2. INSPECT POND PERIODICALLY FOR ACCUMULATION OF TRASH AND DEBRIS AND REMOVE IT UPON DISCOVERY.
3. MOWING AND LANDSCAPING MAINTENANCE SHOULD BE DONE ON A MONTHLY BASIS DURING THE ACTIVE GROWING SEASON FOR THIS AREA. INSPECT AND MAINTAIN AS REQUIRED DURING THE GROWING SEASON.
4. WEEDS OR UNDESIRABLE GROWTH SHALL BE REMOVED UPON DISCOVERY.
5. CATCH BASINS SHALL BE FLUSHED AS NECESSARY (IF ANY).
6. THE OWNER SHALL RE-GRADE AND RE-STABILIZE SWALE/RETENTION/DETENTION AREAS AS REQUIRED TO MAINTAIN THE APPROVED DESIGN, CROSS-SECTION, LINE, AND GRADE.
7. REMOVE SEDIMENT FROM POND WHEN ACCUMULATION REACHES FOUR (4) INCHES. MEASURE ACCUMULATION ONCE A YEAR.

AFTER EACH RAINFALL EVENT

1. PAVEMENT AREAS - VISUALLY INSPECT AND CLEAN EXCESS DEBRIS AND DIRT FROM PAVEMENT AREAS.
2. SEDIMENTS IN RETENTION/DETENTION AREAS - REMOVED IMMEDIATELY IF IT REACHES 4" IN DEPTH.
3. DEBRIS IN RETENTION/DETENTION AREAS - ALL DEBRIS AND FOREIGN MATERIAL SHALL BE REMOVED IMMEDIATELY.
4. YARD INLETS, CATCH BASINS, ETC. - ALL DEBRIS AND FOREIGN MATERIALS SHALL BE REMOVED IMMEDIATELY.

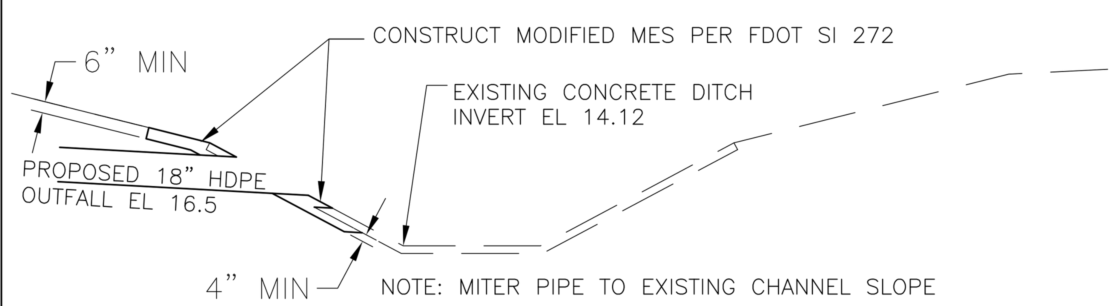

5 C003/C003 OUTFALL TIE IN SECTION
NOT TO SCALE

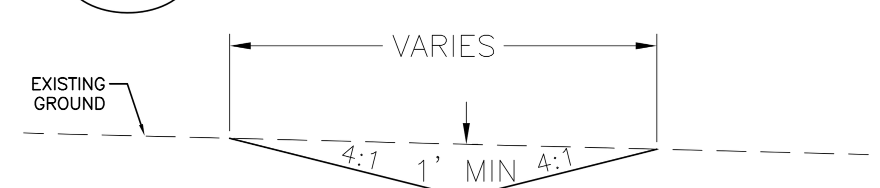

4 C003/C003 SECTION C–C
NOT TO SCALE

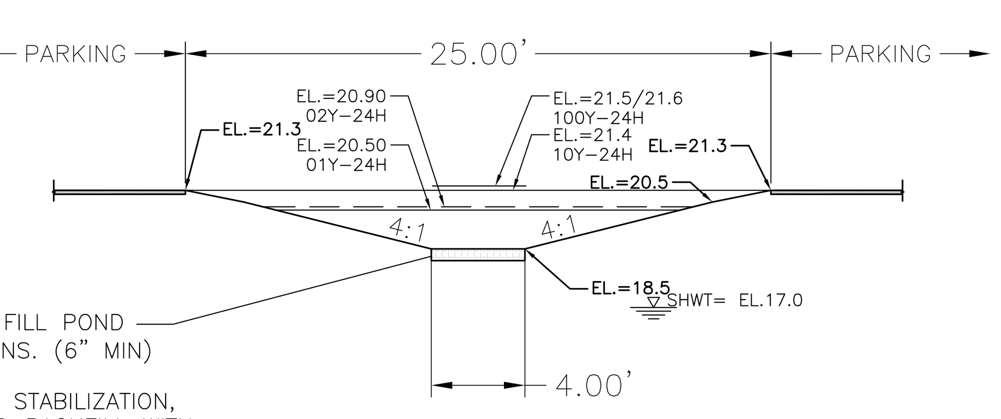

NOTES:

1. OVER EXCAVATE AND BACK FILL POND PER GEOTECH RECOMMENDATIONS. (6" MIN)
2. UPON COMPLETION OF SITE STABILIZATION, SCRAPE BOTTOM OF POND AND BACKFILL WITH CLEAN SAND PER GEOTECH RECOMMENDATIONS.
3. POND SIDE SLOPES ARE TO BE SODDED.

3 C003/C003 SECTION B–B
NOT TO SCALE

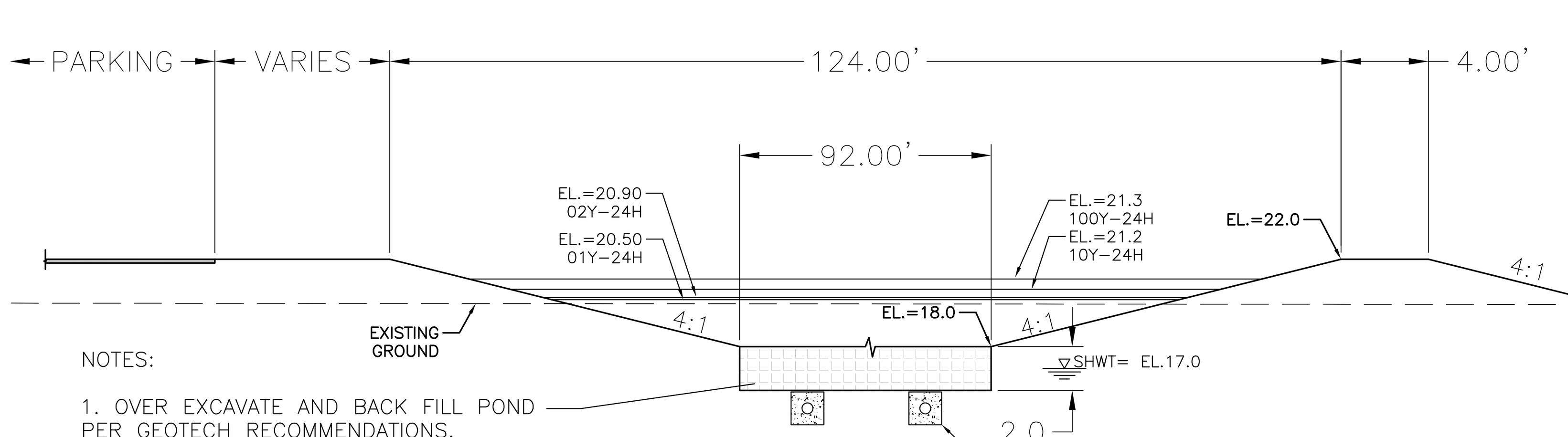

NOTES:

1. OVER EXCAVATE AND BACK FILL POND PER GEOTECH RECOMMENDATIONS.
2. UPON COMPLETION OF SITE STABILIZATION, SCRAPE BOTTOM OF POND AND BACKFILL WITH CLEAN SAND PER GEOTECH RECOMMENDATIONS.
3. POND SIDE SLOPES ARE TO BE SODDED.

2 C003/C003 SECTION A–A
NOT TO SCALE

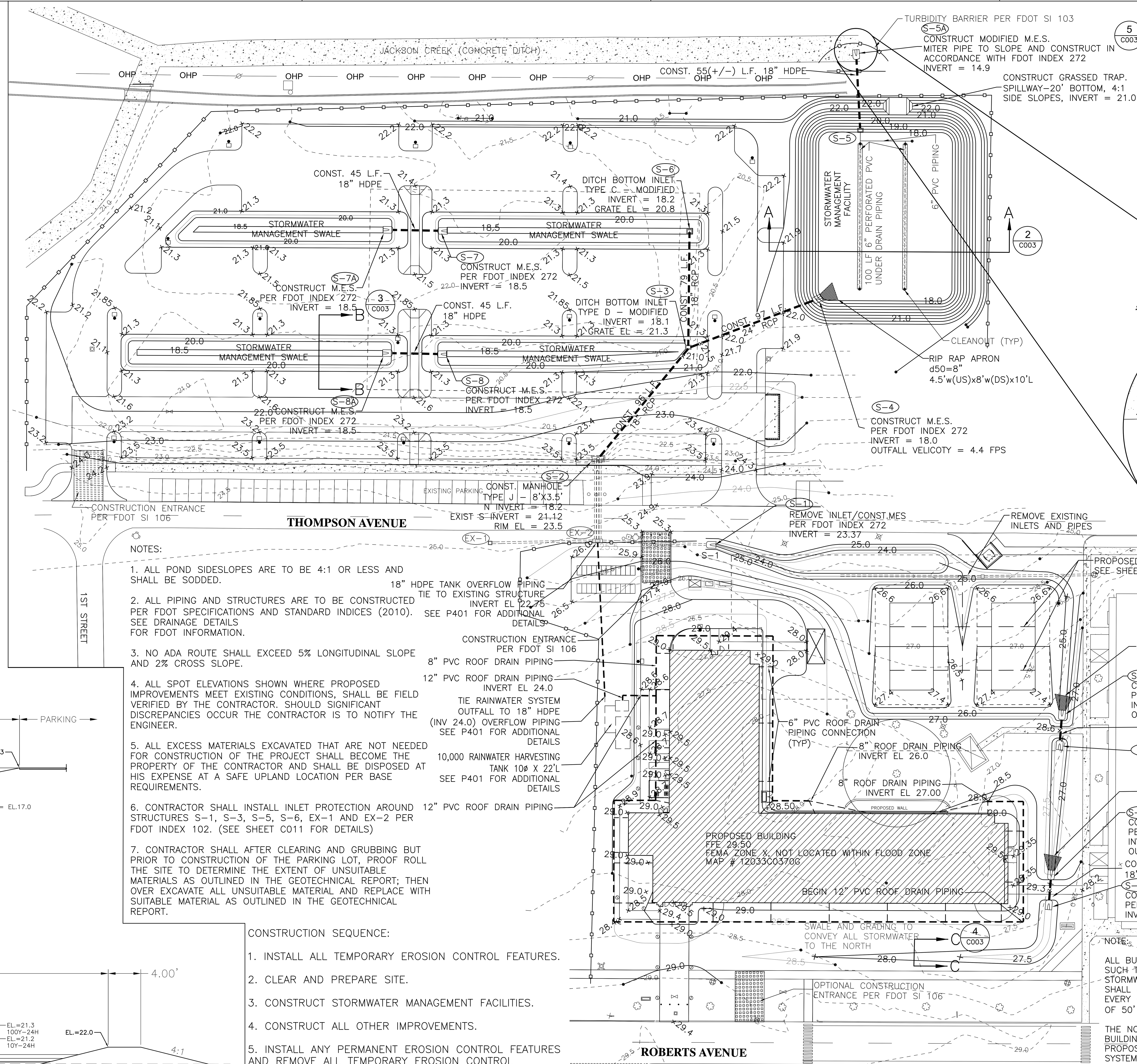

NOTES:

1. ALL POND SIDESLOPES ARE TO BE 4:1 OR LESS AND SHALL BE SODDED.
2. ALL PIPING AND STRUCTURES ARE TO BE CONSTRUCTED PER FDOT SPECIFICATIONS AND STANDARD INDICES (2010). SEE DRAINAGE DETAILS FOR FDOT INFORMATION.
3. NO ADA ROUTE SHALL EXCEED 5% LONGITUDINAL SLOPE AND 2% CROSS SLOPE.
4. ALL SPOT ELEVATIONS SHOWN WHERE PROPOSED IMPROVEMENTS MEET EXISTING CONDITIONS, SHALL BE FIELD VERIFIED BY THE CONTRACTOR. SHOULD SIGNIFICANT DISCREPANCIES OCCUR THE CONTRACTOR IS TO NOTIFY THE ENGINEER.
5. ALL EXCESS MATERIALS EXCAVATED THAT ARE NOT NEEDED FOR CONSTRUCTION OF THE PROJECT SHALL BECOME THE PROPERTY OF THE CONTRACTOR AND SHALL BE DISPOSED AT HIS EXPENSE AT A SAFE UPLAND LOCATION PER BASE REQUIREMENTS.
6. CONTRACTOR SHALL INSTALL INLET PROTECTION AROUND STRUCTURES S–1, S–3, S–5, S–6, EX–1 AND EX–2 PER FDOT INDEX 102. (SEE SHEET C011 FOR DETAILS)
7. CONTRACTOR SHALL AFTER CLEARING AND GRUBBING BUT PRIOR TO CONSTRUCTION OF THE PARKING LOT, PROOF ROLL THE SITE TO DETERMINE THE EXTENT OF UNSUITABLE MATERIALS AS OUTLINED IN THE GEOTECHNICAL REPORT; THEN OVER EXCAVATE ALL UNSUITABLE MATERIAL AND REPLACE WITH SUITABLE MATERIAL AS OUTLINED IN THE GEOTECHNICAL REPORT.

CONSTRUCTION SEQUENCE:

1. INSTALL ALL TEMPORARY EROSION CONTROL FEATURES.
2. CLEAR AND PREPARE SITE.
3. CONSTRUCT STORMWATER MANAGEMENT FACILITIES.
4. CONSTRUCT ALL OTHER IMPROVEMENTS.
5. INSTALL ANY PERMANENT EROSION CONTROL FEATURES AND REMOVE ALL TEMPORARY EROSION CONTROL FEATURES.

LEGEND

Symbol	Description
29.0	EXISTING GRADE SPOT ELEVATION
x 29.0	FINISH GRADE SPOT ELEVATION
	FDOT TYPE DBI PER SI 232 (SOME MODIFIED) (TREATMENT PONDS WILL HAVE ALUMINUM SKIMMERS)
	FDOT MANHOLE PER SI 200 AND 201
	FDOT MES PER SI 272
	STORM PIPE
	SILT FENCE PER FDOT SPECIFICATIONS AND SI 102
	PROPOSED BUILDING
	CONCRETE SURFACE
SAN	SANITARY SEWER LINE
WM	WATER LINE
GAS	NATURAL GAS LINE
FUEL	FUEL OIL LINE
OHL	OVERHEAD LINE
BE	ABANDONED DUCT BANK
OHP	OVERHEAD POWER
FOC	FIBER OPTIC CABLE LINE

EXISTING LAND USE CLASSIFICATION:

173 MILITARY – 1733 NAVY INSTALLATION 6.83 AC/100%

PROPOSED LAND USE CLASSIFICATION:

173 MILITARY – 1733 NAVY INSTALLATION 6.83 AC/100%

1 C003/C003 SITE GRADING & DRAINAGE PLAN

NOTE:

ALL BUILDING ROOF DRAINS SHALL BE DIRECTED SUCH THAT ALL RUNOFF WILL BE ROUTED TO THE STORMWATER MANAGEMENT FACILITIES. A CLEANOUT SHALL BE PROVIDED AT EVERY CONNECTION AND EVERY CHANGE IN DIRECTION AND AT A MAXIMUM OF 50' APART

THE NORTH, EAST AND SOUTH SIDES OF THE BUILDING ARE COLLECTED VIA SHEET FLOW TO THE PROPOSED SWALE THEN TO THE STORM DRAIN SYSTEM, WHILE THE WEST SIDE OF THE BUILDING SHEET FLOWS AND IS COLLECTED BY INLET EX–2

NOTE TO CONTRACTOR:

A. A COPY OF THE PERMIT WILL BE KEPT ON SITE.

B. THE CONTRACTOR IS REQUIRED TO REVIEW THE COMPLETE PERMIT PRIOR TO CONSTRUCTION COMMENCEMENT.

C. AN 8.5 BY 11 WEATHER RESISTANT SIGN, INCLUDING THE PERMIT NUMBER SHALL BE PLACED ON THE PROPERTY FACING THE ROAD.

Feet 0 10 20 40 80

Scale: 1" = 40'

S–5
DITCH BOTTOM INLET TYPE C – MODIFIED
N INVERT = 15.00
U/D INVERT = 15.00

North

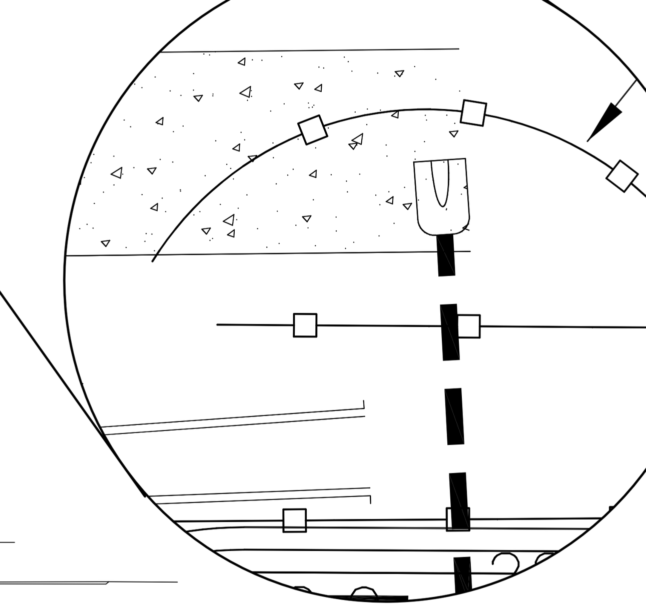

INSTALL STEEL DOWEL AT CONNECTION TO CONCRETE DTICH TO KEEP TURBIDITY BARRIER IN PLACE DURING STORM EVENTS.

SYM	DESCRIPTION	DATE	APPR	EWG
1	REVISED NOTES AND ADDED OUTFALL CONNECTION DETAIL	02/25/2011		

NAVFAC

ANDERSON DRACE JOINT VENTURE

PROFESSIONAL SEAL: ERIC W. GOOCH, LICENSE No 61686, STATE OF FLORIDA, PROFESSIONAL ENGINEER

FLORIDA P.E. NO. 61686 SEAL

EGH ARCHITECTS eleyguildhardy.com A/E INFO

APPROVED

FOR COMMANDER NAVFAC

ACTIVITY

SATISFACTORY TO DATE

DES	DRW	CHK

DEPARTMENT OF THE NAVY
NAVAL FACILITIES ENGINEERING COMMAND
NAVAL FACILITIES ENGINEERING COMMAND SOUTHEAST
NAVAL AIR STATION JACKSONVILLE, FL
IPT GULFCOAST
CORRY STATION
PENSACOLA, FLORIDA

BUILDING P-724 Corry "A" School BEQ
REVISED [2+0] MODULE DESIGN
SITE GRADING AND DRAINAGE PLAN

DRMP
ENGINEERS • SURVEYORS • PLANNERS • SCIENTISTS
Certificate of Authorization No. 02648
1435 East Piedmont Drive, Suite 210
Tallahassee, Florida 32308
Phone:850.562.9600 WWW.DRMP.COM

SCALE:	AS NOTED
EPROJECT NO.:	10-045
CONSTR. CONTR. NO.	N69450-10-C-0755
NAVFAC DRAWING NO.	15050360
SHEET	15 OF 204
	C003

LEGEND

- FDOT TYPE DBI PER SI 232 (SOME MODIFIED) (TREATMENT PONDS WILL HAVE ALUMINUM SKIMMERS)
- FDOT MANHOLE PER SI 200 AND 201
- FDOT MES PER SI 272
- CMP
- SILT FENCE PER FDOT SPECIFICATIONS AND SI 102
- POST DEVELOPMENT FLOW ARROW
- DRAINAGE BASIN DIVIDES

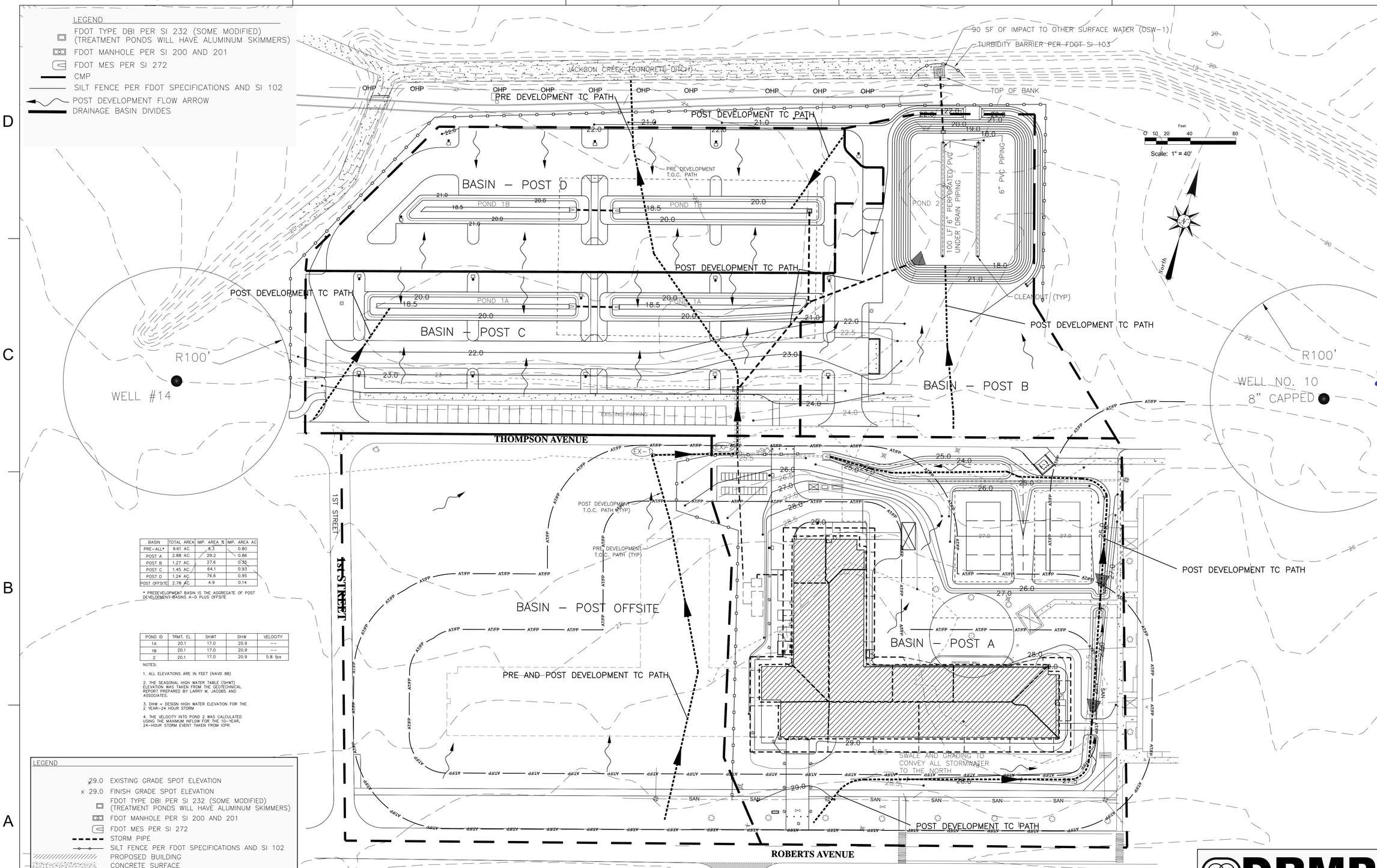

BASIN	TOTAL AREA	IMP. AREA %	IMP. AREA AC
PRE-ALL*	9.61 AC.	8.3	0.80
POST A	2.88 AC.	29.2	0.86
POST B	1.27 AC.	27.6	0.35
POST C	1.45 AC.	64.1	0.93
POST D	1.24 AC.	76.6	0.95
POST OFFSITE	2.78 AC.	4.9	0.14

* PREDEVELOPMENT BASIN IS THE AGGREGATE OF POST DEVELOPMENT-BASINS A–D PLUS OFFSITE

POND ID	TRMT. EL	SHWT	DHW	VELOCITY
1A	20.1	17.0	20.9	--
1B	20.1	17.0	20.9	
2	20.1	17.0	20.9	5.8 fps

NOTES:

1. ALL ELEVATIONS ARE IN FEET (NAVD 88)
2. THE SEASONAL HIGH WATER TABLE (SHWT) ELEVATION WAS TAKEN FROM THE GEOTECHNICAL REPORT PREPARED BY LARRY M. JACOBS AND ASSOCIATES.
3. DHW = DESIGN HIGH WATER ELEVATION FOR THE 2 YEAR–24 HOUR STORM
4. THE VELOCITY INTO POND 2 WAS CALCULATED USING THE MAXIMUM INFLOW FOR THE 10–YEAR, 24–HOUR STORM EVENT TAKEN FROM ICPR.

LEGEND

- 29.0 EXISTING GRADE SPOT ELEVATION
- x 29.0 FINISH GRADE SPOT ELEVATION
- FDOT TYPE DBI PER SI 232 (SOME MODIFIED) (TREATMENT PONDS WILL HAVE ALUMINUM SKIMMERS)
- FDOT MANHOLE PER SI 200 AND 201
- FDOT MES PER SI 272
- STORM PIPE
- SILT FENCE PER FDOT SPECIFICATIONS AND SI 102
- PROPOSED BUILDING
- CONCRETE SURFACE
- SAN — SANITARY SEWER LINE
- WM — WATER LINE
- GAS — NATURAL GAS LINE
- FUEL — FUEL OIL LINE
- OHE — OVERHEAD LINE
- BE — ABANDONED DUCT BANK
- OHP — OVERHEAD POWER
- FOC — FIBER OPTIC CABLE LINE

NOTE: CONTOUR INFORMATION SHOWN ON THIS SHEET IS TAKEN FROM ESCAMBIA COUNTY GIS

DEVELOPMENT INFORMATION:

ROY ANDERSON CORP, P.O. BOX 2 GULFPORT, MS 39502 (228) 896–4000 IS RESPONSIBLE FOR MONITORING, SUBMITTING THE NOTICE OF CONSTRUCTION ACTIVITIES, AND SUBMITTING AS–BUILT CERTIFICATIONS FOR THE PROJECT UPON COMPLETION.

DRMP
ENGINEERS • SURVEYORS • PLANNERS • SCIENTISTS
Certificate of Authorization No. 02648
1435 East Piedmont Drive, Suite 210
Tallahassee, Florida 32308
Phone:850.562.9600 WWW.DRMP.COM

			APPR.
			DATE
			DESCRIPTION
			SYM

NAVFAC

ANDERSON DRACE JOINT VENTURE

PROFESSIONAL SEAL: ERIC W. GOOCH, LICENSED PROFESSIONAL ENGINEER, No. 71686, STATE OF FLORIDA

EGH ARCHITECTS
eleyguildhardy.com
A/E INFO

APPROVED

FOR COMMANDER NAVFAC ACTIVITY

SATISFACTORY TO DATE

DES | DRW | CHK

DEPARTMENT OF THE NAVY
NAVAL FACILITIES ENGINEERING COMMAND
IPT GULFCOAST
NAVAL FACILITIES ENGINEERING COMMAND SOUTHEAST
NAVAL AIR STATION JACKSONVILLE, FL
CORRY STATION
PENSACOLA, FLORIDA

BUILDING P-724 Corry "A" School BEQ
REVISED [2+0] MODULE DESIGN

DRAINAGE BASIN MAP

SCALE:

EPROJECT NO.: 19045

CONSTR. CONTR. NO. N69450-10-C-0755

NAVFAC DRAWING NO. 15050361

SHEET 16 OF 204

C003A

Feet
0 20 40 80
Scale: 1" = 40'

North

CONSTRUCT MANHOLE FRAME & COVER OVER EXISTING MONITORING WELL. RESET EXISTING LID 6" BELOW FINISHED GRADE.

TIE INTO EXISTING GAS MAIN WITH HOT TAP (SEE NOTE #5)

INSTALL TRAFFIC RATED JUNCTION BOX W/ ACCESS LID FLUSH WITH FINISHED GRADE

GAS MAIN DIRECTIONAL BORE

THOMPSON AVENUE

1st STREET

ROBERTS AVENUE

CAUTION: GAS & FUEL OIL PIPES EXIST ON OR NEAR PROJECT SITE.

NOTE: COORDINATE WITH DEMOLITION PLAN FOR UTILITY REMOVAL.

290± L.F. GAS MAIN TO BUILDING

GAS METER LOCATION

6 / C006 — 45± L.F. OF 6" PVC WATER MAIN PLUS GATE VALVE (SEE PLUMBING FOR CONTINUATION INTO BUILDING)

6" ON 6" TEE

6 / C006 — 10± L.F. OF 6" PVC WATER MAIN PLUS GATE VALVE (CAP PIPE END FOR FUTURE USE)

145± L.F. OF 8" PVC WATER MAIN (SEE FIRE PROTECTION FOR CONTINUATION INTO BUILDING)

135± L.F. OF 6" PVC WATER MAIN

CORRY "A" SCHOOL BEQ BUILDING (FFE = 29.50)

SEE PLUMBING PLANS FOR CONTINUATION

8 / C006 — POST INDICATOR VALVE TO BE LOCATED 40' MINIMUM FROM BUILDING

6" ON 8" TEE

5 / C006 — TIE INTO EXISTING WATER MAIN WITH TAPPING SADDLE & VALVE

7 / C006 — RELOCATED FIRE HYDRANT (SEE NOTE #6)

45± L.F. OF 8" PVC SEWER SERVICE @ 1.0% MIN SLOPE

TIE INTO EXISTING SANITARY SEWER MANHOLE INV EL = ± 21.53

ADJUST GRADE EXISTING VALVE BOXES WITHIN PROPOSED DRIVE AS REQUIRED TO ENSURE THEY MATCH PROPOSED GRADES

1 / C004 SITE UTILITY PLAN

UTILITY NOTES:

1. CONTRACTOR IS TO FIELD VERIFY LOCATION OF ALL SUBSURFACE UTILITIES AND VERIFY ALL TIE-IN POINTS PRIOR TO CONSTRUCTION. CONTRACTOR SHALL REPORT ANY DISCREPANCIES, CONFLICTS, OR OTHER UNSATISFACTORY CONDITIONS TO THE ARCHITECT/ENGINEER.
2. SEE ARCHITECTURAL, PLUMBING, OR MECHANICAL DRAWINGS FOR INFORMATION RELATIVE TO BUILDINGS, ASSOCIATED MECHANICAL PADS, AND/OR OTHER ITEMS NOT DETAILED BY CIVIL.
3. CONTRACTOR SHALL INSTALL FITTINGS AS REQUIRED TO ESTABLISH THE PROPOSED ALIGNMENT OF WATER LINES AND SERVICES AS SHOWN.
4. ALL VALVE BOXES, CLEANOUTS, SEWER MANHOLE TOPS, AND OTHER UTILITY STRUCTURE TOPS SHALL BE ADJUSTED BY THE CONTRACTOR TO MATCH FINAL GRADES IN ALL AREAS.
5. GAS MAIN HOT TAP SHALL BE INSTALLED BY TRAINED AND EXPERIENCED CREWS. MAKE CONNECTIONS BETWEEN NEW WORK AND EXISTING GAS LINES IN ACCORDANCE WITH ASME B31.8, USING PROPER FITTINGS TO SUIT THE ACTUAL CONDITIONS. THE CONTRACTOR SHALL PROVIDE A "CONNECTION PLAN" PRIOR TO MAKING ANY CONNECTIONS TO EXISTING GAS LINES.
6. EXTEND EXISTING SERVICE LINE TO HYDRANT TO ENSURE THAT THE HYDRANT IS A MINIMUM OF 3 FEET BEYOND THE PROPOSED CONCRETE ENTRANCE/DRIVE.

LEGEND

SAN	EXISTING SANITARY SEWER LINE
WM	EXISTING WATER LINE
GAS	EXISTING NATURAL GAS LINE
FUEL	EXISTING FUEL OIL LINE
OHL	EXISTING OVERHEAD LINE
BE	EXISTING ABANDONED DUCT BANK
OHP	EXISTING OVERHEAD POWER
FOC	EXISTING FIBER OPTIC CABLE LINE
SS	PROPOSED SANITARY SEWER LINE
WM	PROPOSED WATER MAIN
GAS	PROPOSED GAS MAIN

SYM	DESCRIPTION	DATE	APPR

NAVFAC

ANDERSON DRACE JOINT VENTURE

LLOYD SEYMOUR LICENSED PROFESSIONAL ENGINEER 17695 1/19/12 STATE of MISSISSIPPI

EGH ARCHITECTS eleyguildhardy.com

APPROVED

FOR COMMANDER NAVFAC

ACTIVITY

SATISFACTORY TO DATE JAN 17, 2012

DES LES DRW LES CHK KK

DEPARTMENT OF THE NAVY
NAVAL FACILITIES ENGINEERING COMMAND SOUTHEAST
IPT GULF COAST
CORRY STATION

NAVAL FACILITIES ENGINEERING COMMAND
NAVAL AIR STATION JACKSONVILLE, FL
PENSACOLA, FLORIDA

BUILDING P-724 Corry "A" School BEQ
REVISED [2+0] MODULE DESIGN

SITE UTILITY PLAN

SCALE: AS INDICATED

EPROJECT NO.: 10-045

CONSTR. CONTR. NO. N69450-10-C-0755

NAVFAC DRAWING NO. 15050362

SHEET 17 OF 204

C004

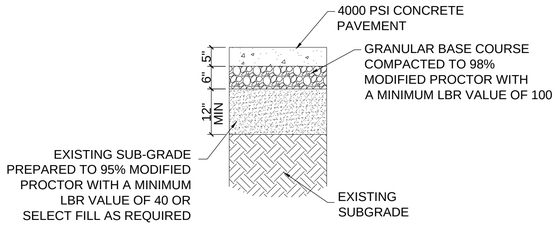

HEAVY DUTY CONCRETE PAVEMENT

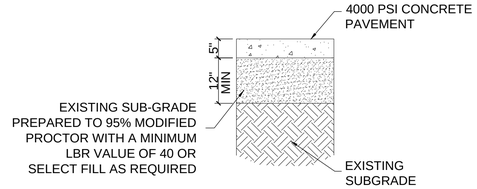

MEDIUM DUTY CONCRETE PAVEMENT

NOTES:
1. SEE DETAIL 2 - "TYPICAL EXCAVATION FOR AREAS UNDER PAVEMENT FOR SUB-GRADE PREPARATION REQUIREMENTS.
2. SEE SITE LAYOUT PLAN FOR LOCATIONS OF PAVEMENT TYPES.
3. ALL GRANULAR BASE COURSE MATERIAL SHALL MEET THE REQUIREMENTS OF THE FDOT STANDARD SPECIFICATIONS FOR ROAD AND BRIDGE CONSTRUCTION SECTION 204.

1 C002 C005 TYPICAL PAVEMENT DETAILS
N.T.S.

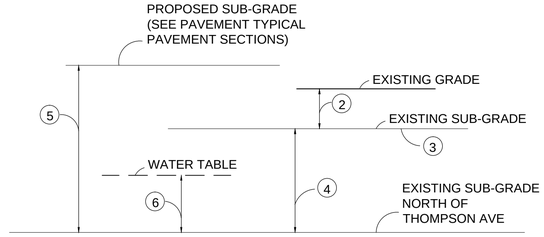

2 C002 C005 TYPICAL EXCAVATION AND FILL UNDER AREAS TO BE PAVED
N.T.S.

EXCAVATION NOTES:

1. ALL SITE PREPARATION AND EXCAVATION CONSTRUCTION SHALL MEET THE REQUIREMENTS AS DETAILED ON THE PLANS AND THE RECOMMENDATIONS OF THE REPORT OF GEOTECHNICAL EXPLORATION PREPARED BY LARRY M. JACOBS & ASSOCIATES FOR THIS PROJECT DATED SEPTEMBER 28, 2010.
2. THE INITIAL STEP IN SITE PREPARATION SHOULD BE TO CLEAR, GRUB, DEMOLISH, AND THE REMOVAL OF MISCELLANEOUS TRASH, DEBRIS, AND VEGETATION AND ALL OTHER DELETERIOUS MATERIAL FROM WITHIN AND TO 5 FEET BEYOND THE PROPOSED PAVEMENT AREAS.
3. UPON THE COMPLETION OF CLEARING AND STRIPPING OPERATIONS, THE EXISTING GROUND SURFACE IN AND TO 5 FEET BEYOND THE PROPOSED PAVEMENT AREAS SHALL BE COMPACTED FOR A MINIMUM DEPTH OF 12 INCHES TO A MINIMUM OF 95% OF THE SOIL'S MAXIMUM DENSITY AS DETERMINED BY THE MODIFIED PROCTOR TEST (ASTM D1557).
4. BECAUSE OF ORGANICS PRESENT IN THE PROPOSED PARKING AREA NORTH OF THOMPSON AVENUE, ADDITIONAL UNDERCUT AND EXCAVATION WORK WILL BE REQUIRED. AREAS FOUND TO CONTAIN ORGANICS WILL BE EXCAVATED AS NECESSARY.
5. SELECT FILL MATERIAL PLACED TO OBTAIN FINAL GRADE SHALL BE COMPACTED IN 8-INCH LOOSE LIFTS TO A MINIMUM OF 95% OF THE SOIL'S MAXIMUM DENSITY AS DETERMINED BY THE MODIFIED PROCTOR TEST (ASTM D1557). SELECT FILL MATERIAL SHALL BE OF A SANDY NATURE WITH LESS THAN ABOUT 30% OF THE SOIL PARTICLES PASSING THE NO. 200 SIEVE AND A LIQUID LIMIT OF LESS THAN 10.
6. IN AREAS WHERE GROUNDWATER OR SATURATED SOIL CONDITIONS ARE ENCOUNTERED DURING THE REQUIRED EXCAVATIONS, THE INITIAL LIFT OF FILL MATERIAL SHALL CONSIST OF A CLEAN SAND PLACED AT LEAST 2 FEET ABOVE THE STATIC WATER TABLE OR TO A DISTANCE TO ADEQUATELY BRIDGE OVER THE SATURATED NATURAL SOIL. DURING PLACEMENT BELOW THE GROUNDWATER TABLE, THE CLEAN SAND MAY BE THOROUGHLY "TRACKED" WITH A BULLDOZER IN LIEU OF MEASURED COMPACTION TESTS. CLEAN SAND SHALL CONSIST OF A MATERIAL WITH LESS THAN 5% OF THE SOIL MATERIAL PASSING THE NO. 200 SIEVE.

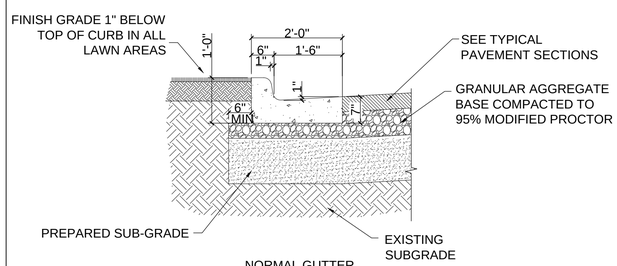

NORMAL GUTTER

NOTES:
1. SEE DETAIL 2 - "TYPICAL EXCAVATION FOR AREAS UNDER PAVEMENT FOR SUB-GRADE PREPARATION REQUIREMENTS.
2. JOINTS IN CURB & GUTTER SHALL BE A 1-1/4" DEEP TOOLED JOINT ON ALL SIDES AND AT A MAXIMUM SPACING OF 10' O.C.
3. LOCAL EQUIVALENT DETAILS ACCEPTABLE AS APPROVED BY THE ARCHITECT/ENGINEER.

3 C002 C005 TYPICAL CURB & GUTTER DETAILS
N.T.S.

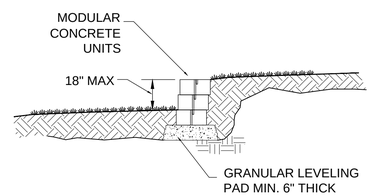

4 C002 C005 TYPICAL RETAINING WALL DETAIL
N.T.S.

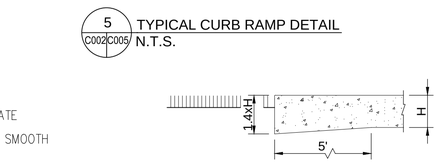

5 C002 C005 TYPICAL CURB RAMP DETAIL
N.T.S.

THICKENED EDGE

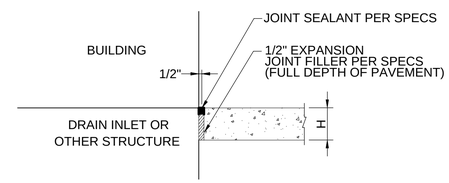

ISOLATION JOINT

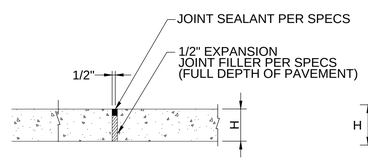

EXPANSION JOINT

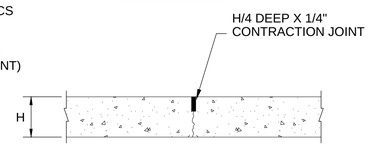

CONTRACTION JOINT

9 C002 C005 TYPICAL CONCRETE JOINT DETAILS
N.T.S.

NOTES:
1. SEE "TYPICAL EXCAVATION FOR AREAS UNDER PAVEMENT" FOR SUB-GRADE PREPARATION REQUIREMENTS.
2. SEE CIVIL SITE PLAN AND "TYPICAL PAVEMENT SECTIONS" FOR LOCATIONS AND DEPTHS OF PAVEMENTS.
3. SEE CIVIL SITE PLAN FOR CONCRETE JOINT LAYOUT AND LOCATIONS.
4. THICKEN EDGE JOINTS SHALL BE CONSTRUCTED PER THE PLANS OR WHERE CONCRETE PAVEMENTS MEET NON-PAVED AREAS.
5. ISOLATION JOINTS SHALL BE CONSTRUCTED PER THE PLANS OR WHERE CONCRETE PAVEMENTS MEET BUILDINGS OR OTHER UTILITY STRUCTURES.
6. CONTRACTION JOINTS SHALL BE CONSTRUCTED PER THE PLANS OR AT A MAXIMUM JOINT SPACING 12 FEET.
7. JOINT SEALANT SHALL BE RECESSED APPROXIMATELY ⅜" BELOW PAVEMENT SURFACE.

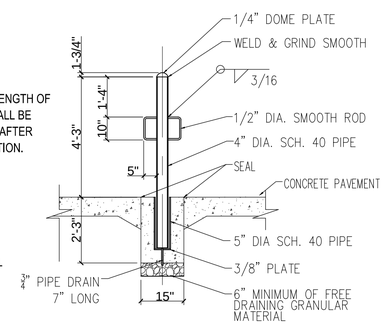

NOTE:
ENTIRE LENGTH OF POST SHALL BE PAINTED AFTER FABRICATION.

7 C002 C005 REMOVABLE BOLLARD
N.T.S.

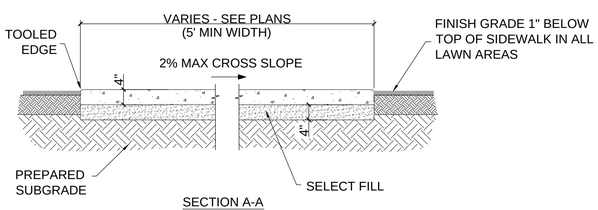

SECTION A-A

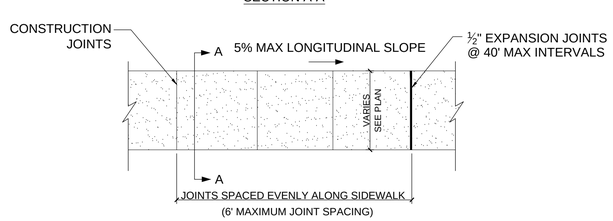

PLAN

NOTES:
1. SEE "TYPICAL EXCAVATION FOR AREAS UNDER PAVEMENT" FOR SUB-GRADE PREPARATION REQUIREMENTS.

6 C002 C005 TYPICAL CONCRET SIDEWALK DETAIL
N.T.S.

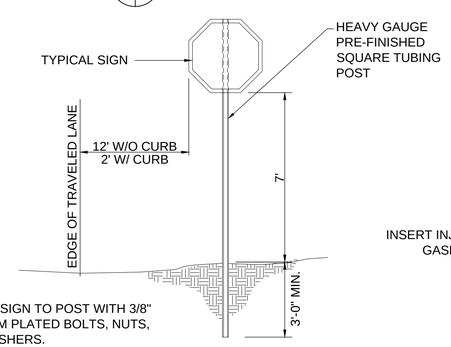

NOTE:
FASTEN SIGN TO POST WITH 3/8" CADMIUM PLATED BOLTS, NUTS, AND WASHERS.

8 C002 C005 TYPICAL SIGN INSTALLATION DETAIL
N.T.S.

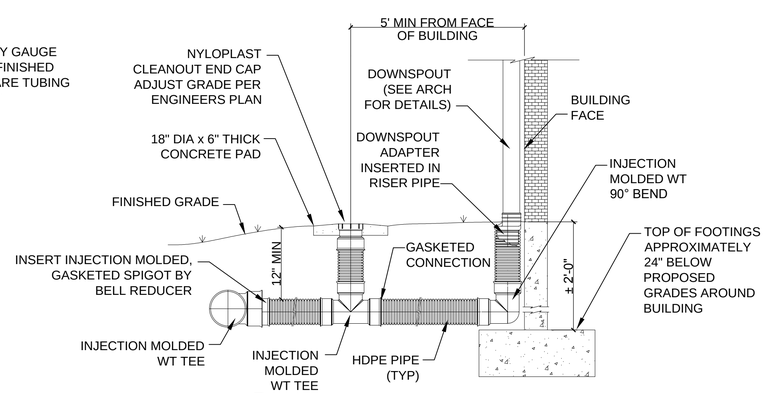

10 C004 C005 TYPICAL DOWNSPOUT CONNECTION DETAIL
N.T.S.

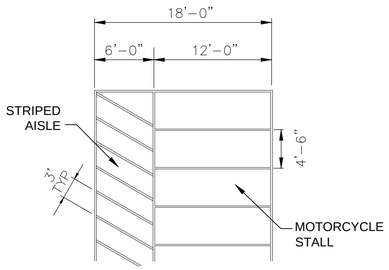

11 C002 C005 TYPICAL MOTORCYCLE PARKING DETAIL
N.T.S.

SYM	DESCRIPTION	DATE	APPR

NAVFAC

ANDERSON DRACE JOINT VENTURE

LLOYD SEYMOUR LICENSED PROFESSIONAL ENGINEER 17695 1/19/12 STATE OF MISSISSIPPI

EGH ARCHITECTS eleyguildhardy.com

APPROVED

FOR COMMANDER NAVFAC

ACTIVITY

SATISFACTORY TO DATE JAN 17, 2012

DES LES DRW LES CHK KK

DEPARTMENT OF THE NAVY
NAVAL FACILITIES ENGINEERING COMMAND SOUTHEAST
NAVAL AIR STATION, JACKSONVILLE, FL
IPT GULF COAST
CORRY STATION
PENSACOLA, FLORIDA

BUILDING P-724 Corry "A" School BEQ
REVISED [2+0] MODULE DESIGN

SITE DETAILS

SCALE: AS INDICATED

EPROJECT NO.: 10-045

CONSTR. CONTR. NO. N69450-10-C-0755

NAVFAC DRAWING NO. 15050363

SHEET 18 OF 204

C005

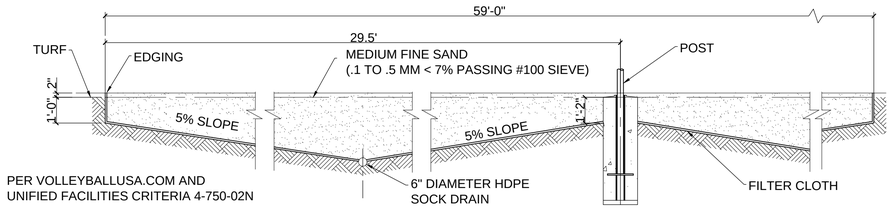

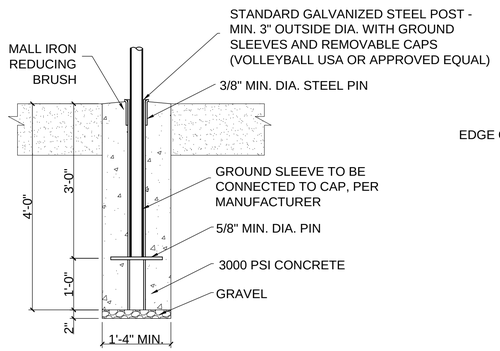

VOLLEYBALL POST FOOTING

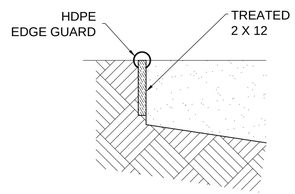

VOLLEYBALL EDGING DETAIL

1 C002 C006 VOLLEYBALL COURT STRUCTURE
N.T.S.

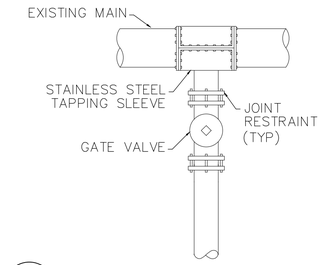

5 C004 C006 TYPICAL TAPPING SLEEVE AND VALVE DETAIL
N.T.S.

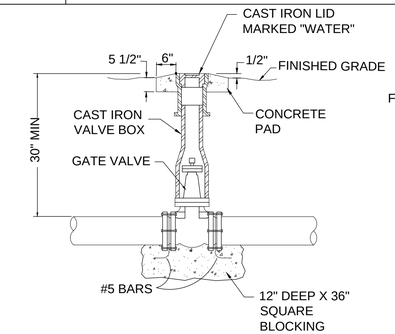

6 C004 C006 GATE VALVE & BOX DETAIL
N.T.S.

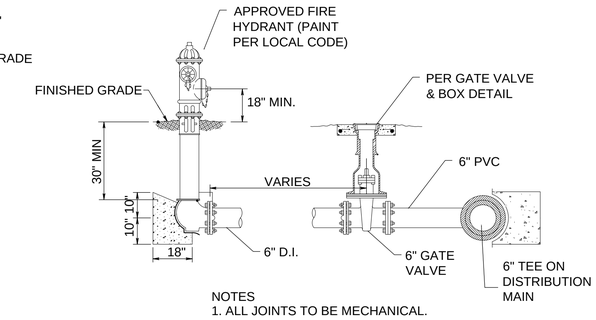

NOTES
1. ALL JOINTS TO BE MECHANICAL.

7 C004 C006 TYPICAL FIRE HYDRANT ASSEMBLY DETAIL
N.T.S.

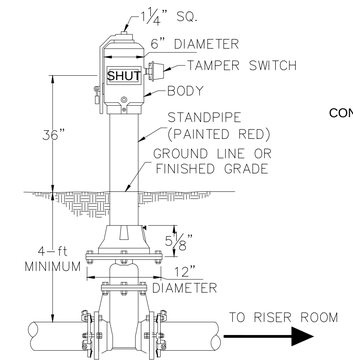

8 C004 C006 TYPICAL POST INDICATOR VALVE ASSEMBLY DETAIL
N.T.S.

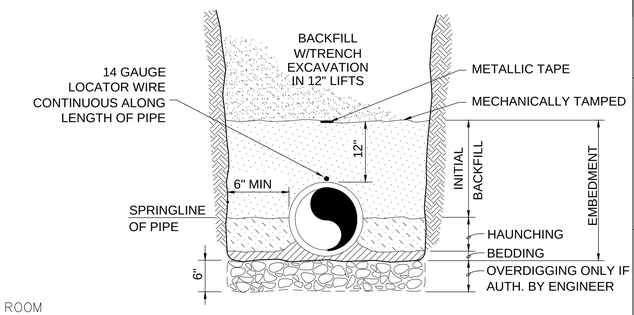

9 C004 C006 TYPICAL UTILITY PIPE EMBEDMENT & BACKFILL
N.T.S.

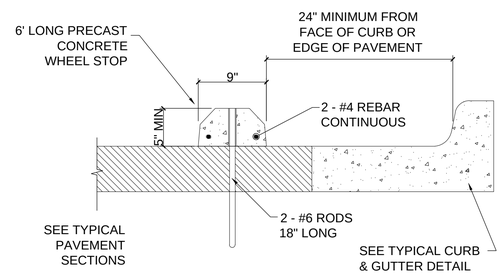

3 C002 C005 6' LONG PRECAST CONCRETE WHEEL STOP DETAIL
N.T.S.

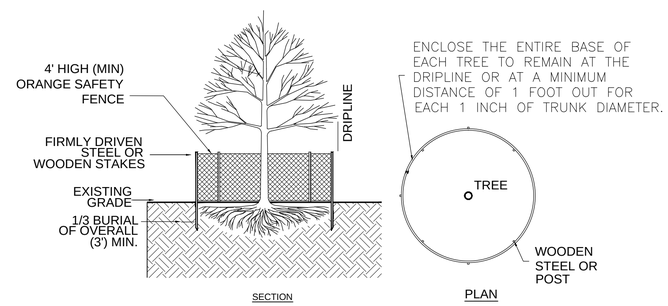

SECTION PLAN

2 C001 C006 TREE PROTECTION PLACEMENT DETAIL
N.T.S.

NOTE:
1. ALL DIMENSIONS ARE IN INCHES.
2. USE ON WATER LINES AND SEWER FORCE MAINS.

CONCRETE THRUST BLOCK SCHEDULE

SIZE	45° BEND		22 1/2° BEND		11 1/4° BEND		90° BEND		TEE		PLUG	
	A	B	A	B	A	B	A	B	A	B	C	D
6"	16	10	9	10	6	8	18	10	10	12	10	21
8"	22	13	12	13	8	10	25	13	16	12	20	29
10"	26	17	14	17	10	13	30	17	16	20	14	36
12"	29	21	16	21	11	16	34	21	18	24	16	41
14"	35	24	19	24	12	20	36	24	22	27	18	48
16"	38	27	21	27	12	24	42	27	24	30	20	54

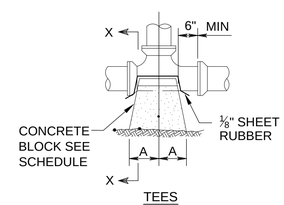

TEES

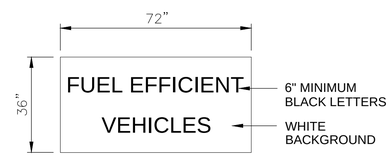

ENLARGED SYMBOL

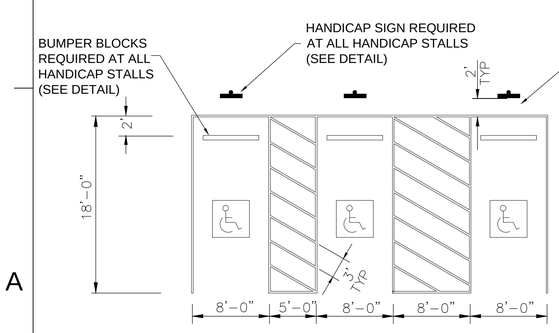

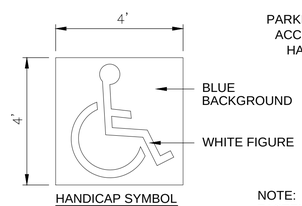

HANDICAP SYMBOL

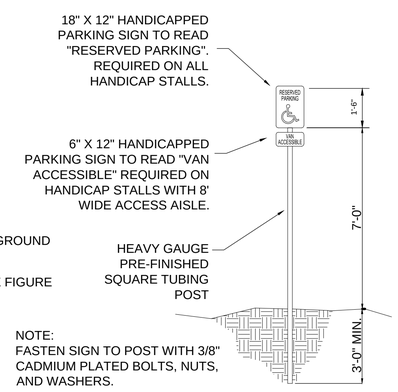

NOTE:
FASTEN SIGN TO POST WITH 3/8"
CADMIUM PLATED BOLTS, NUTS,
AND WASHERS.

HANDICAP SIGN

NOTES:
1. ALL HANDICAP STALLS SHALL BE CONSTRUCTED WITH MAXIMUM SLOPES OF 2% IN ALL DIRECTIONS.
2. USE 4" WIDE BLUE STRIPING FOR ALL HANDICAP PARKING.

4 C002 C005 TYPICAL HANDICAP PARKING DETAIL
N.T.S.

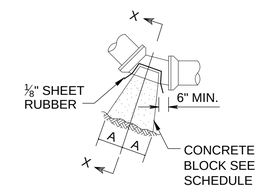

BENDS

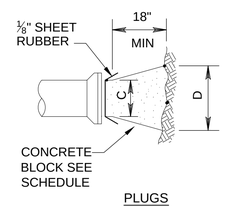

PLUGS

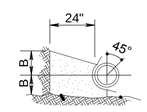

SECTION X-X

10 C004 C006 TYPICAL THRUST BLOCK DETAIL
N.T.S.

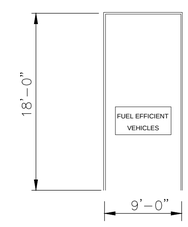

11 C002 C006 TYPICAL LEV PARKING DETAIL
N.T.S.

SYM	DESCRIPTION	DATE	APPR

NAVFAC

ANDERSON DRACE
JOINT VENTURE

LLOYD SEYMOUR
LICENSED PROFESSIONAL ENGINEER
17695
1/19/12
STATE of MISSISSIPPI

EGH ARCHITECTS
eleyguildhardy.com
A/E INFO

APPROVED
FOR COMMANDER NAVFAC
ACTIVITY
SATISFACTORY TO DATE JAN 17, 2012
DES LES DRW LES CHK KK

DEPARTMENT OF THE NAVY
NAVAL FACILITIES ENGINEERING COMMAND SOUTHEAST
NAVAL AIR STATION, JACKSONVILLE, FL
IPT GULF COAST
CORRY STATION
PENSACOLA, FLORIDA
BUILDING P-724 Corry "A" School BEQ
REVISED [2+0] MODULE DESIGN
SITE DETAILS

SCALE: AS INDICATED
EPROJECT NO.: 10-045
CONSTR. CONTR. NO. N69450-10-C-0755
NAVFAC DRAWING NO. 15050364
SHEET 19 OF 204
C006

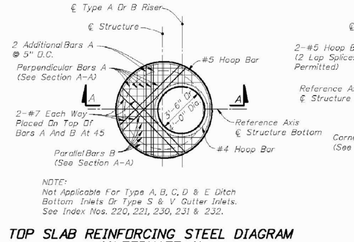

TOP SLAB REINFORCING STEEL DIAGRAM (ALTERNATE A)

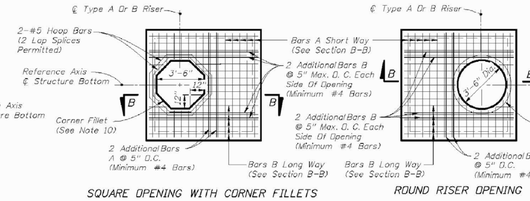

SQUARE OPENING WITH CORNER FILLETS

ROUND RISER OPENING

TOP SLAB REINFORCING STEEL DIAGRAM (ALTERNATE B)

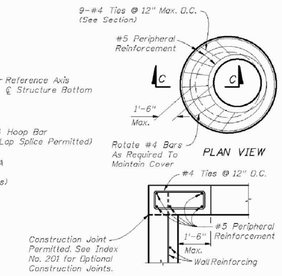

SECTION C-C

SPECIAL TOP SLAB*

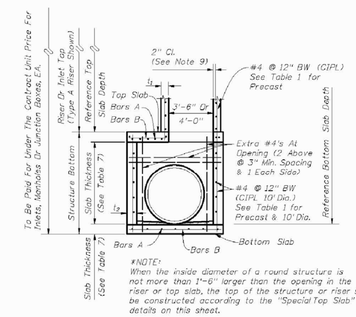

SECTION A-A

(ALTERNATE A)

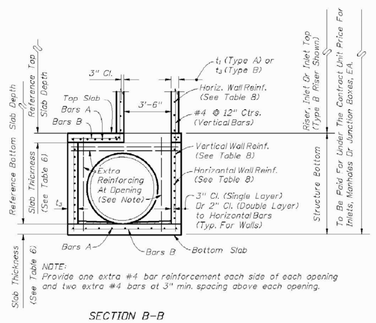

SECTION B-B

(ALTERNATE B)

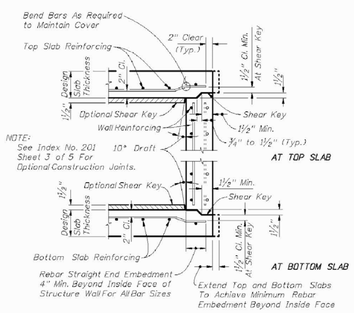

TYPICAL SLAB TO WALL DETAILS FOR PRECAST STRUCTURES

APPLICABLE FOR STRUCTURES: S-2

2010 FDOT Design Standards

STRUCTURES BOTTOMS TYPE J AND P

Last Revision 07/01/09 | Sheet No. 1 of 5 | Index No. 200

TABLE 3-MINIMUM STRUCTURE SIZES FOR SINGLE PIPE CONNECTION PER SIDE

PIPE SIZE	RECTANGULAR Side Dimension (L) Single Pipe Per Side	Note Number	ROUND Diameter (D) Single Pipe or 2 to 4 Pipes θ=180°	2 to 4 Pipes θ=90°
18"	3'-6"		3'-6"	4'-0"
24"	3'-6"		3'-6"	5'-0"
30"	3'-6"/4'-0"	2	4'-0"	6'-0"
36"	4'-0"/5'-0"	3	5'-0"	7'-0"
42"	5'-0"		6'-0"	7'-0"
48"	6'-0"		6'-0"	8'-0"
54"	6'-0"		7'-0"	10'-0"
60"	7'-0"		7'-0"	10'-0"
66"	7'-0"/8'-0"	4	8'-0"	12'-0"
72"	8'-0"		8'-0"	12'-0"
78"	9'-0"		10'-0"	12'-0"
84"	9'-0"		12'-0"	N/A

TABLE 3 NOTES:
1. For Round Structures sizes with variable angles between pipes and variable pipe sizes, refer to the FDOT Storm Drain Handbook.
2. For 3'-6" Precast Square Structure Bottoms, 30" Pipes with similar invert elevations are not permitted in adjacent walls. Use 4'-0" Side Dimensions when 30" pipe openings are required on adjacent walls and the difference in flow lines is less than 3'-0".
3. For 4'-0" Precast Square Structure Bottoms, 36" Pipes with similar invert elevations are not permitted in adjacent walls. Use 5'-0" Side Dimensions when 36" pipe openings are required on adjacent walls and the difference in flow lines is less than 3'-0".
4. For 7'-0" Precast Square Structure Bottoms, 66" Pipes with similar invert elevations are not permitted in adjacent walls. Use 8'-0" Side Dimensions when 66" pipe openings are required on adjacent walls and the difference in flow lines is less than 4'-0".

TABLE 4-MINIMUM SIZES FOR MULTIPLE PARALLEL PIPE CONNECTIONS FOR RECTANGULAR STRUCTURE BOTTOMS

PIPE SIZE	PIPE SPACING (S)	MINIMUM WALL LENGTH (L) FOR NUMBER OF PARALLEL PIPES 2	3	4
18"	2'-10"	6'-0"	8'-6"	11'-0"
24"	3'-5"	6'-6"	10'-0"	13'-6"
30"	4'-3"	8'-0"	12'-6"	16'-6"
36"	5'-1"	9'-0"	14'-6"	19'-6"
42"	6'-0"	11'-0"	17'-0"	–
48"	6'-9"	12'-6"	19'-0"	–
54"	7'-8"	14'-0"	–	–
60"	8'-6"	15'-0"	–	–
66"	9'-0"	16'-6"	–	–
72"	10'-0"	18'-0"	–	–
78"	10'-9"	19'-0"	–	–
84"	11'-8"	20'-6"	–	–

TABLE 4 NOTES:
1. Minimum wallengths based on precast structures, using concrete pipe with maximum skew angles per Table 5.
2. Wall lengths exceeding 20'-0" require special designs.

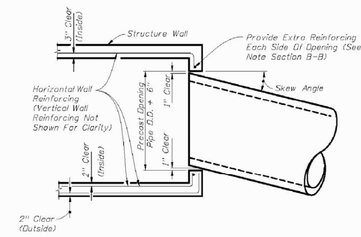

MAXIMUM PIPE SKEW FOR PRECAST ROUND OPENINGS PLAN VIEW

TABLE 5 - MAXIMUM PIPE SKEW FOR PRECAST ROUND OPENINGS

	WALL THICKNESS	PIPE SIZE 18"	24"	30"	36"	42"	48"	54"	60"	66"	72"	78"	84"
MAXIMUM SKEW ANGLE	8"	19°	17°	16°	16°	15°	14°	14°	13°	13°	13°	13°	12°
	6"	21°	20°	19°	17°	17°	16°	16°	15°	15°	14°	13°	13°

TABLE 5 NOTES:
These values are based on 2" clearance for precast structures. Larger skews are possible for Cast-In-Place Structures or elliptical pipe openings when approved by the Engineer.

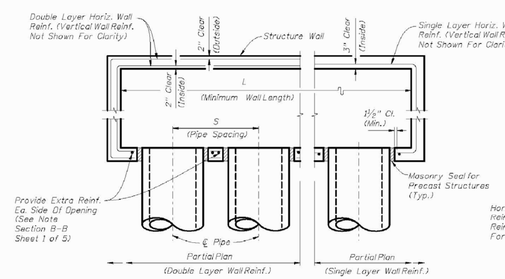

MULTIPLE PARALLEL PIPE CONNECTIONS DETAIL PLAN VIEW

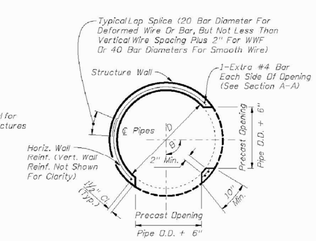

PRECAST ROUND STRUCTURES WITH MULTIPLE PIPE CONNECTIONS

STRUCTURE SIZES FOR PIPE CONNECTIONS

APPLICABLE FOR STRUCTURES: S-2

2010 FDOT Design Standards

STRUCTURE BOTTOMS TYPE J AND P

Last Revision 07/01/07 | Sheet No. 3 of 5 | Index No. 200

ROUND STRUCTURE BOTTOMS (ALTERNATE A) & ROUND RISERS-TABLE 1

Wall Thickness (t_1 & t_2) and Vertical & Horizontal Areas of Reinforcement (A_s)

Type	Structure ℄ Riser Diameter (feet)	Cast-In-Place Items Class II Concrete: t_1 Riser (inches)	t_2 Bottom (inches)	A_s (in.²/ft.)	Precast Items Class II Concrete: t_1 Riser (inches)	t_2 Bottom (inches)	A_s (in.²/ft.)	ASTM C478: t_1 or t_2 (inches)	A_s *** (in.²/ft.)
P	3'-6"	6	8	0.20	6	8	0.20	4**	0.105
P	4'-0"	6	8	0.20	6	8	0.20	5**	0.120
J	5'-0"	–	8	0.20	–	8	0.20	6**	0.150
J	6'-0"	–	8	0.20	–	8	0.20	6	0.180
J	7'-0"	–	8	0.20	–	8	0.20	7	0.210
J	8'-0"	–	8	0.20	–	8	0.24	8	0.240
J	10'-0"	–	10	0.40##	–	10	0.40##	10	0.300
J	12'-0"	–	10	0.40##	–	12	0.40##	12	0.360

TABLE 1 NOTES:
##Provide 0.20 sq. in.²/ft. at each face, 12" max. bar spacing.
**Modified minimum wall thickness.
***Min. total or concentric reinforcement for continuous steel hoops:
A_s=0.50 sq. in. for riser section height equal or less than 2'-0" (2 hoop min.)
A_s=0.75 sq. in. for riser section height more than 2'-0" up to 4'-0" (3 hoop min.)
Areas of reinforcing for precast items are based on Grade 60 reinforcing.
No reduction in the area of reinforcement is allowed for welded wire fabric in Table 1:
Area of vertical reinforcing may be reduced in accordance with ASTM C478.

SQUARE & RECTANGULAR STRUCTURES (ALTERNATE B) - TABLE 2

Type	Wall Length (feet)	Max. Depth (feet)	Wall Thickness (t_1) CIPL (in.)	Precast (in.)
P	≤3'-6"	40	6 Riser 8 Bottom	6
J	4'-0"	40	8	6
J	5'-0"	22	—	6
J	6'-0"	15	—	6
J	5'-0" to 9'-0"	40	8	8
J	10'-0"	25	8	8
J	≥10'-0"	40	10	10

TABLE 2 NOTES:
See Table B for Reinforcing Schedule.

GENERAL NOTES

1. Standard structure bottoms 4'-0" diameter and smaller (Alt. A) and 3'-6" square (Alt. B) are designated Type P. Larger standard structure bottoms are designated Type J. Risers are permitted for all structures. Round risers are designated Type A, square risers are designated Type B.
2. Walls of circular structures (Alt. A) constructed in place may be of brick or reinforced concrete. Precast and rectangular structures (Alt. B) shall be constructed of reinforced concrete only.
3. Wall thickness and reinforcement are for either reinforced cast-in-place or precast concrete units except that precast circular units may be furnished with walls in accordance with ASTM C478 (see modified wall thicknesses in Table 1).
4. Top and bottom slab thickness and reinforcement are for precast and cast-in-place construction. All concrete shall be of Class II concrete, except use Class IV concrete when shown in the Plans, for special applications of structures located in extremely aggressive environments. Concrete as specified in ASTM C478 (4000 psi) may be used in lieu of Class II concrete for precast items manufactured in accordance with Specifications Section 449.
5. All reinforcement shown is ASTM A615/A615M Grade 60 steel, deformed bar. Equivalent area Grade 40 steel or equivalent area ASTM A185 (smooth) or ASTM A497 (deformed) welded wire fabric may be substituted according to Index No. 201, unless otherwise noted.
6. Alt. A or Alt. B structure bottoms may be used in conjunction with curb inlet tops Types 1, 2, 3, 4, 5, 6, 9, and 10, and any manhole or junction box unless otherwise shown in the plans or other standard drawings. Alt. B structure bottoms may be used in conjunction with curb inlet Types 7 & 8, or any ditch bottom inlet unless otherwise shown in the plans or other standard drawings.
7. Rectangular structures may be rotated as directed by the Engineer in order to facilitate connections between the structure walls and storm sewer pipes.
8. Except when ACI hooks are specifically required, reinforcement in top and bottom slab shall be straight embedment.
9. All reinforcement must have 2" minimum cover except for 3'-6" diameter precast circular units manufactured under ASTM C478, keyed construction joints, and pipe openings must all have 1½" minimum cover, unless otherwise shown. Additional bars used to restrain hole formers for precast structures with grouted pipe connections, may be left flush with the hole surface. Cut or bend reinforcement at pipe openings to maintain cover. Exposed ends of reinforcing at precast pipe openings and grouted joints must be removed to 1" below the concrete surface and sealed with a Type F epoxy in accordance with Specification Section 926. Horizontal steel in rectangular structures shall be lapped a minimum of 30 bar diameters or by standard hooks at corners.
10. The corner fillets shown are necessary for rectangular structures used with circular risers and inlet throats and when used on skew with rectangular risers, inlets and inlet throats. Fillets will be required in the top slab of the Alt. A structure bottoms when used with the Alt. B risers. Each fillet shall be reinforced with two #5 bars.
11. Inlet walls, throats, risers or manhole tops shall be secured to structures as shown on Index No. 201 (Sheet 3 of 5) Optional Construction Joints.
12. Structures with depths over 14' below the mean high water table are to be checked for flotation by the designer of the drainage project.
13. Units larger than specified standards may be substituted at the contractor's option when these units will not cause or increase the severity of utility conflicts. Such larger units shall be furnished at no additional cost to the Department. Larger Alt. A units cannot replace Alt. B units without approval of the Engineer. This note applies to this Index only.
14. For manhole and junction box tops, for frames and covers, and, for supplementary details see Index No. 201.
15. Type J structure bottoms must have a minimum 6'-0" wall height when possible, for maintenance access.

APPLICABLE FOR STRUCTURES: S-2

2010 FDOT Design Standards

STRUCTURE BOTTOMS TYPE J AND P

Last Revision 01/01/09 | Sheet No. 2 of 5 | Index No. 200

SLAB DESIGNS - SQUARE AND RECTANGULAR STRUCTURES (TABLE 6)
(ALL SLABS 8" THICK EXCEPT AS NOTED - REINFORCING PARALLEL TO SHORT WAY AND LONG WAY)

SHORT-WAY SLAB DEPTH	SHORT-WAY SCHEDULE (Bars A)	LONG-WAY SLAB DEPTH	LONG-WAY SCHEDULE (Bars B)
SIZE: 3'-6" x UNLIMITED			
>0.5' < 8'	B10	>0.5' < 24'	B10
8' < 13'	B5.5	24'-40'	B5.5
13' < 31'	C6.5		
31'-40'	D7		
SIZE: 4' x UNLIMITED			
>0.5' < 7'	B5.5	>0.5' < 15'	B10
7' < 19'	C6.5	15' < 29'	B5.5
19' < 31'	D7	29'-40'	C6.5
31'-40'	E5		
SIZE: 5' x 5'			
>0.5' < 3'	C6.5	>0.5' < 3'	C6.5
3' < 7'	B5.5	3' < 13'	C6.5
7' < 22'	C6.5	13' < 22'	D7
22' < 29'	D7	29' < 39'	D4.5
29'-40'	E5	39'-40'	E5
SIZE: 5' x 6'			
>0.5' < 12'	C6.5	>0.5' < 3'	C6.5
12' < 26'	D7	3' < 9'	B5.5
26'-40'	E5	9' < 23'	C3.5
		23' < 35'	D4.5
		35'-40'	E5
SIZE: 5' x 7'			
>0.5' < 10'	C6.5	>0.5' < 10'	B5.5
10' < 20'	D7	10' < 31'	C3.5
20' < 34'	E5	31'-40'	D4.5
34'-40'	F5		
SIZE: 5' x 8'			
>0.5' < 7'	C6.5	>0.5' < 8'	B10
7' < 13'	D7	8' < 17'	B5.5
13' < 24'	E5	17' < 26'	C6.5
24'-40'	F5	26'-40'	C3.5
SIZE: 5' x 9'			
>0.5' < 8'	C6.5	>0.5' < 14'	B10
8' < 14'	D7	14' < 24'	B5.5
14' < 25'	E5	24' < 34'	C6.5
25'-40'	F5	34'-40'	C3.5
SIZE: 5' x UNLIMITED			
>0.5' < 8'	C6.5	>0.5' < 14'	B10
8' < 14'	D7	14' < 24'	B5.5
14' < 25'	E5	24' < 34'	C6.5
25'-40'	F5	34'-40'	C3.5

SHORT-WAY SLAB DEPTH	SHORT-WAY SCHEDULE (Bars A)	LONG-WAY SLAB DEPTH	LONG-WAY SCHEDULE (Bars B)
SIZE: 6' x 6'			
>0.5' < 13'	C6.5	>0.5' < 10'	C3.5
13' < 23'	D7	10' < 18'	D4.5
23'-40'	E5	18' < 27'	E5
		27' < 33'	E3
		33'-40'	F5
SIZE: 6' x 7'			
>0.5' < 8'	C6.5	>0.5' < 8'	C6.5
8' < 16'	D7	8' < 12'	C3.5
16' < 28'	E5	12' < 21'	D4.5
28'-40'	F5	21' < 28'	E5
		28' < 35'	E3
		35'-40'	F5
SIZE: 6' x 8'			
>0.5' < 6'	C6.5	>0.5' < 6'	B5.5
6' < 13'	D7	6' < 11'	C6.5
13' < 22'	E5	11' < 17'	C3.5
22' < 35'	F5	17' < 23'	D4.5
35'-40'	G5	23' < 32'	E5
		32'-40'	E3
SIZE: 6' x 9'			
>0.5' < 8'	D7	>0.5' < 8'	B5.5
8' < 14'	E5	8' < 14'	C6.5
14' < 24'	F5	14' < 21'	C3.5
24'-34'	G5	21' < 25'	D4.5
		25'-34'	E5
SIZE: 6' x UNLIMITED			
>0.5' < 8'	D7	>0.5' < 8'	B5.5
8' < 14'	E5	8' < 14'	C6.5
14' < 24'	F5	14' < 21'	C3.5
24'-34'	G5	21' < 25'	D4.5
		25'-34'	E5
SIZE: 7' x 7'			
>0.5' < 8'	C6.5	>0.5' < 4'	C6.5
8' < 15'	D7	4' < 7'	C3.5
15' < 26'	E5	7' < 11'	D4.5
26'-40'	F5	11' < 22'	E3
		22' < 32'	F3.5
		32'-40'	G3.5
SIZE: 7' x 8'			
>0.5' < 5'	C6.5	>0.5' < 5'	C6.5
5' < 11'	D7	5' < 8'	C3.5
11' < 19'	E5	8' < 13'	D4.5
19' < 30'	F5	13' < 22'	E3
30'-40'	G5	22' < 30'	F3.5
		30'-40'	G3.5
SIZE: 7' x 9'			
>0.5' < 9'	D7	>0.5' < 7'	C6.5
9' < 15'	E5	7' < 10'	C3.5
15' < 25'	F5	10' < 14'	D4.5
25' – 34'	G5	14' < 21'	E5
		21' < 29'	F5
		29'-34'	F3.5

SHORT-WAY SLAB DEPTH	SHORT-WAY SCHEDULE (Bars A)	LONG-WAY SLAB DEPTH	LONG-WAY SCHEDULE (Bars B)
SIZE: 8' x 8'			
>0.5' < 10'	D7	>0.5' < 9	D4.5
10' < 19'	E5	9' < 13'	E5
19'-30'	F5	13' < 18'	F5
		18' < 23'	F3.5
		23'-30'	G3.5
SIZE: 8' x 9'			
>0.5' < 8'	D7	>0.5' < 7'	D7
8' < 14'	E5	7' < 9'	D4.5
14' < 23'	F5	9' < 15'	E3
23'-31'	G3.5	15' < 20'	F5
		20' < 23'	F3.5
		23'-31'	G3.5
SIZE: 9' x 9'			
>0.5' < 8'	D7	>0.5' < 7'	D4
8' < 14'	E5	7' < 10'	E5
14' < 25'	F5	10' < 17'	F3.5
		17' < 22'	G3.5
SIZE: 9'x9'x10" SLAB THICKNESS			
22' < 36'	F5	23' < 31'	F3.5
36'-40'	G5	31'-40'	G3.5
SIZE: 10'x10'x10" SLAB THICKNESS			
>0.5' < 7'	C6.5	>0.5' < 6'	C6.5
7' < 10'	D7	6' < 9'	D4.5
10' < 18'	E5	9' < 15'	E5
18' < 27'	F5	15' < 22'	F5
27'-32'	G5	22'-32'	G3.5
SIZE: 12'x12'x12" SLAB THICKNESS			
>0.5' < 10'	D7	>0.5' < 8'	D7
10' < 16'	E5	8' < 14'	E5
16' < 25'	F5	14' < 22'	F5
25'-35'	G5	22' < 30'	G5
		30'-35'	H4

SLAB DESIGNS - ROUND STRUCTURES (TABLE 7)

SLAB DEPTH	SLAB THICKNESS	REINF. (2-WAY) SCHEDULE
SIZE: 3'-6" DIAMETER		
2'-12'	6" Precast	C6.5
0.5' < 30'	8"	A6
30'-40'	8"	B5.5
SIZE: 4'-0" DIAMETER		
>0.5' < 19'	8"	A6
19' < 30'	8"	B5.5
30'-40'	8"	C6.5
SIZE: 5'-0" DIAMETER		
>0.5' < 15'	8"	B5.5
15' < 26'	8"	C6.5
26' < 35'	8"	D7
35'-40'	8"	D4.5
SIZE: 6'-0" DIAMETER		
>0.5' < 9'	8"	B5.5
9' < 15'	8"	C6.5
15' < 22'	8"	C3.5
22' < 30'	8"	D4.5
30'-40'	8"	E5
SIZE: 7'-0" DIAMETER		
>0.5' < 8'	8"	C3.5
8' < 16'	8"	D4.5
16' < 23'	8"	E5
23' < 27'	8"	F3
27'-40'	8"	F3.5
SIZE: 8'-0" DIAMETER		
>0.5' < 10'	8"	D4.5
10' < 16'	8"	E5
16' < 19'	8"	F3
19' < 29'	8"	F3.5
29'-40'	10"	F5
SIZE: 10'-0" DIAMETER		
>0.5' < 12'	10"	D4.5
12' < 20'	10"	E5
20' < 28'	10"	F5
28'-40'	10"	G3.5
SIZE: 12'-0" DIAMETER		
>0.5' < 8'	10"	D4.5
8' < 13'	10"	E5
13' < 18'	10"	F5
18' < 26'	10"	G3.5
26'-40'	12"	G3.5

SLAB AND WALL DESIGN TABLE NOTES

1. Size is the inside dimension(s) of a structure.
2. Slab reinforcement is appropriate for top, intermediate, and bottom slabs.
3. Bottom Slabs for precast 3'-6" x 3'-6" rectangular structures at 15' depth or less, may be 6" thick.
4. Slab depth is measured from finished grade to top of slab.
5. Wall depth is measured to the top of the bottom slab for boxes and to the top of the intermediate slab for risers.
6. Wall height is the distance between top of lower slab to bottom of upper slab. Maximum wall height is 12' for wall lengths exceeding 5', or 10' for wall lengths exceeding 12'.
7. Wall lengths exceeding 6'-0" require two layers of reinforcing (See Table B) with 2" of cover from the horizontal bars to the inside and outside faces for each layer.
8. Wall lengths exceeding the dimensions or depths shown in Table B, or 12'-0" diameter require a special design.
9. Wall thickness and reinforcing for rectangular structures is the same for both long and short sides.
10. Reinforcing schedules with larger areas of steel may be substituted for schedules with smaller bar or wire spacing, except that Schedule B10 may not be substituted for Schedule A6. See Index 201, Sheet 4 for allowable bar spacing adjustments when larger areas of reinforcing are substituted.

APPLICABLE FOR STRUCTURES: S-2

2010 FDOT Design Standards

STRUCTURE BOTTOMS TYPE J AND P

Last Revision 07/01/09 | Sheet No. 4 of 5 | Index No. 200

APPR.	DATE	DESCRIPTION	SYM.

NAVFAC

ANDERSON DRACE JOINT VENTURE

FOR REFERENCE ONLY

SEAL

EGH ARCHITECTS
eleyguildhardy.com
A/E INFO

APPROVED

FOR COMMANDER NAVFAC

ACTIVITY

SATISFACTORY TO DATE DEC 15, 2011

DES EWG | DRW EWG | CHK BAK

NAVAL FACILITIES ENGINEERING COMMAND

DEPARTMENT OF THE NAVY

BUILDING P-724 Corry "A" School BEQ
REVISED [2+0] MODULE DESIGN

DRAINAGE DETAILS

SCALE: NONE

EPROJECT NO.: 10-045

CONSTR. CONTR. NO. N69450-10-C-0755

NAVFAC DRAWING NO. 15050365

SHEET 20 OF 204

C007

WALL DESIGNS – RECTANGULAR STRUCTURES (TABLE B)

VERTICAL REINFORCING		HORIZONTAL REINFORCING		WALL THICKNESS
WALL DEPTH	SCHEDULE	WALL DEPTH	SCHEDULE	
SIZE: 3'-6" & RISERS				
21.17'< 40'	A12	21.17' < 10'	B10	6"/8"
		10' < 18'	B5.5	6"/8"
		18' < 29'	C6.5	6"/8"
		29'-40'	C3.5	6"/8"
SIZE: 4'-0"				
21.17'-40'	A12	21.17' < 6'	B10	6"/8"
		6' < 10'	B5.5	6"/8"
		10' < 20'	C6.5	6"/8"
		20' < 28'	C3.5	6"/8"
		28'-40'	D4.5	6"/8"
SIZE: 5'-0"				
21.17'-40'	A12	21.17' < 5'	B5.5	6"/8"
		5' < 9'	C6.5	6"/8"
		9' < 15'	C3.5	6"/8"
		15' < 22'	D4.5	6"/8"
		22'-40'	E3	8"
SIZE: 6'-0"				
21.17' < 26'	A12	21.17' < 9'	C3.5	6"/8"
		9' < 15'	D4.5	6"/8"
		15' < 26'	E3	8"
	Inside/Outside		Inside/Outside	
26' - 40'	A12 / A12	26'-40'	D7 / D7	8"
SIZE: 7'-0"				
	Inside/Outside		Inside/Outside	
21.17' < 25'	A12 / A12	21.17' < 7'	B10 / B10	8"
25'-40'	B10 / B10	7' < 10'	B5.5 / B5.5	8"
		10' < 20'	C6.5 / C6.5	8"
		20' < 30'	D7 / D7	8"
		30'-40'	E5 / E5	8"
SIZE: 8'-0"				
	Inside/Outside		Inside/Outside	
21.17' < 20'	A12 / A12	21.17' < 6'	B5.5 / B5.5	8"
20'-40'	C6.5 / C6.5	6' < 13'	C6.5 / C6.5	8"
		13' < 22'	D7 / D7	8"
		22' < 31'	E5 / E5	8"
		31'-40'	F5 / F5	8"

VERTICAL REINFORCING		HORIZONTAL REINFORCING		WALL THICKNESS
WALL DEPTH	SCHEDULE	WALL DEPTH	SCHEDULE	
SIZE: 9'-0"				
	Inside/Outside		Inside/Outside	
21.17' < 12'	A12 / A12	21.17' < 8'	C6.5 / C6.5	8"
12' < 28'	C6.5 / C6.5	8' < 15'	D7 / D7	8"
28'-40'	D7 / D7	15' < 23'	E5 / E5	8"
		23'-40'	F5 / F5	8"
SIZE: 10'-0"				
	Inside/Outside		Inside/Outside	
21.17' < 10'	B10 / B10	21.17' < 10'	D7 / D7	8"
10' < 21'	C6.5 / C6.5	10' < 17'	E5 / E5	8"
21' < 26'	D7 / D7	17' < 26'	F5 / F5	8"
26'-40'	C6.5 / C6.5	26'-40'	F5 / F5	10"
SIZE: 12'-0"				
	Inside/Outside		Inside/Outside	
21.17' < 10'	B10 / B10	21.17' < 10'	D7 / D7	10"
10' < 21'	C6.5 / C6.5	10' < 17'	E5 / E5	10"
21' -40'	D7 / D7	17' < 26'	F5 / F5	10"
		26'-40'	G5 / G5	10"
SIZE: 20'-0"				
	Inside/Outside		Inside/Outside	
21.17' < 10'	C6.5 / C6.5	21.17' > 10'	E5 / E5	10"
10' < 17'	D7 / D7	10' < 17'	F5 / F5	10"
17' -30'	E5 / E5	17'-30'	G5 / G5	10"

REINFORCING SCHEDULE				
SCHEDULE	GRADE 60 BARS OR 65 KSI & 70 KSI WELDED WIRE FABRIC			
	GRADE 60* AREA (in.²/ft.)	MAXIMUM SPACING		
		GR 60 BARS	WWF EQUIV. AREA*	
			65 KSI	70 KSI
A12	0.20	12"	8"	8"
A8	0.20	6"	5"	4½"
B10	0.24	10"	8"	7½"
B5.5	0.24	5½"	5"	4"
C6.5	0.37	6½"	6"	5"
C3.5	0.37	3½"	3"	2½"
D7	0.53	7"	6"	5"
D4.5	0.53	4½"	4"	3½"
E5	0.73	5"	4"	4"
E3	0.73	3"	3"	3"
F5	1.06	5"	4"	4"
F3.5	1.06	3½"	3"	3"
G5	1.45	5"	4"	4"
G3.5	1.45	3½"	3"	3"
H4	1.75	4"	3"	3"

*Equivalent Area Welded Wire Fabric may be substituted in accordance with Index No. 201, Sheet 4.

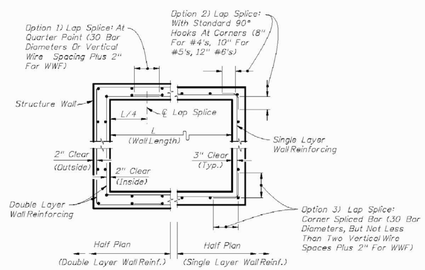

WALL REINFORCING SPLICE DETAILS (ALTERNATE B)

APPLICABLE FOR STRUCTURES: S-2

2010 FDOT Design Standards

STRUCTURE BOTTOMS TYPE J AND P

Last Revision 01/01/08 | Sheet No. 5 of 5 | Index No. 200

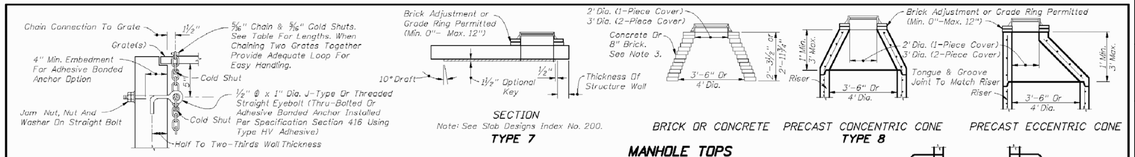

NOTE: When Alternate "C" grate is specified, the chain, bolt, nuts, washer and cold shuts shall be galvanized in accordance with Section 425 of the Standard Specifications.

Cost of eyebolt and chain to be included in the contract unit price for inlets.

SECTION
Note: See Slab Designs Index No. 200.
TYPE 7

BRICK OR CONCRETE | PRECAST CONCENTRIC CONE | PRECAST ECCENTRIC CONE
TYPE 8

MANHOLE TOPS

EYEBOLT AND CHAIN REQUIREMENTS				
Index Number	Inlet Type	Eye-Bolts	Length Of Chain	Handling & Remarks
217	(MB) 1	1	4'-0"	Slide & Spin
	(MB) 2	1	4'-0"	Slide & Spin
	(MB) 3	2	2 @ 4'-0"	Slide & Spin
	(MB) 4	2	2 @ 4'-0"	Slide & Spin
	(MB) 5	2	2 @ 4'-0"	Slide & Spin
218	(BW)	1	3'-8"	Slide Or Slide & Spin
219	(BW, MGD)	1	4'-0"	Slide & Spin
220	S	1	4'-0"	Slide & Spin
221	V	1	4'-0"	Slide & Spin
230	A	1	3'-0"	Slide
231	B	1	5'-0"	Slide & Spin
	C	1	2'-6"	Slide & Spin
	D	1	2'-6"	Slide & Spin
232	E	2	2 @ 2'-6"	Slide & Spin
	H	2	2 @ 2'-6"	Flip Ctr. Grate and Slide & Spin Single Free Grate
		1 or 2 @ 1'-6"		Ctr. Grate(s) Chained To One End Grate
233	F	1	3'-6"	Flip Or Slide & Spin
	G	1	6'-0"	Slide
			2'-0"	Lifting Loop
234	J	1	4'-0"	Slide & Spin

1. Manhole top Type 7 slabs shall be of Class II concrete. Concrete as specified in ASTM C478 may be used for precast units see General Note No. 3.
2. Manhole top Type 7 slabs may be of cast-in-place or precast construction. The optional key is for precast tops and in lieu of dowels. Frame and slab openings are to be omitted when top is used over a junction box.
3. Manhole top Type 8 may be of cast-in-place or precast concrete construction or brick construction. For concrete construction, the concrete and steel reinforcement shall be the same as the supporting wall unit. An eccentric cone may be used.
4. Manhole tops shall be secured to structures by optional construction joints as shown on Sheet 3 of 4.
5. Frames can be adjusted a maximum 12" height with brick or precast ASTM C478 grade rings.
6. Substitution of manhole top Type 8 for manhole top Type 7 is allowed provided that minimum dimensions shown above are not reduced.
7. Substitution of Manhole top Type 7 for Type 8 is allowed if the minimum thickness (h) above pipe opening cannot be maintained with manhole top Type 8.

DESIGN NOTES

1. Manhole top Type 8 should be specified in the plans when depths shown above can be maintained.

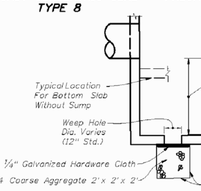

NOTE: Sump bottom appropriate for all manhole and inlet types. Sumps are to be constructed in inlet and manholes connected to French Drains unless excluded in the plans. At other locations, sump is to be constructed only where called for in the plans. Weep holes to be constructed in sump bottom only where called for in the plans. Cost of sump bottom and weep hole to be included in the contract unit price for inlet or manhole.

SUMP BOTTOM

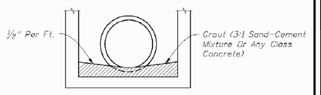

FOR ALL STRUCTURES UNLESS EXCLUDED BY SPECIAL DETAIL

ALL PIPE TYPES DRAINAGE STRUCTURE INVERT

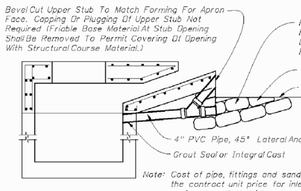

Note: Cost of pipe, fittings and sandbagging to be included in the contract unit price for inlets. See Index No. 102 for sediment control at inlet.

TEMPORARY DRAINS FOR SUBGRADE AND BASE

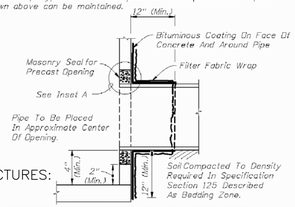

APPLICABLE FOR STRUCTURES: S-2

FILTER FABRIC WRAP ON GROUTED PIPE TO STRUCTURE JOINT

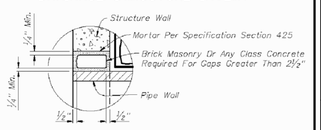

INSET A

2010 FDOT Design Standards

SUPPLEMENTARY DETAILS FOR MANHOLES AND INLETS

Last Revision 07/01/08 | Sheet No. 2 of 5 | Index No. 201

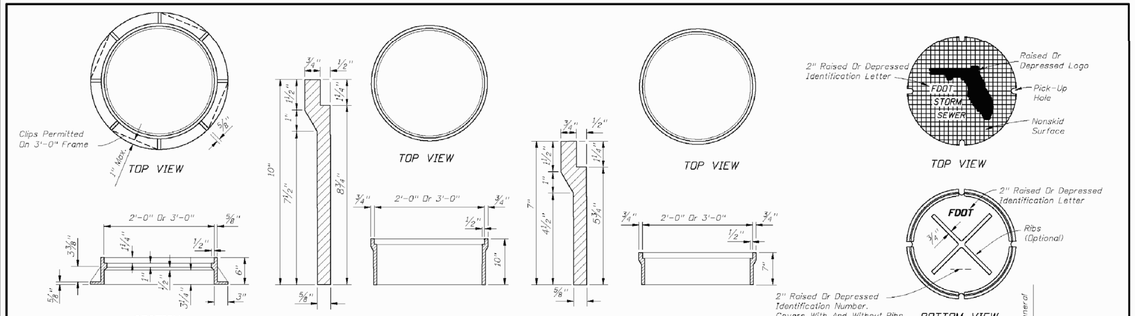

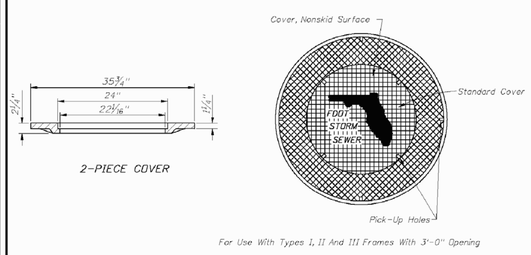

CAST IRON FRAMES

NOTES (FRAMES, AND COVER)

1. The standard cover is to be used for all frames Types I, II, III and the 2-piece cover, and is the replacement cover for all previous frames with 1½" deep seats (traffic type). The 185 lb. cover (nontraffic type), 1984 Roadway and Traffic Design Standards Index No. 201, is the replacement cover for existing frames with 1½" deep seats. Installation of frame with 1½" deep seats is not permitted.
2. Use the 2'-0" cover, unless the 2-piece cover is called for in the plans, except at inlets and manholes with sump bottoms use the 2-piece cover when the sump depth exceeds 2', unless otherwise noted.

DESIGNER NOTE:
Consider using the 2-piece cover where depths exceed 5' and manual entry may be required for cleaning. Clearly note the requirement for a 2-piece cover, on the Drainage Structure sheets in the plans.

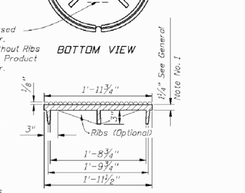

SECTION COVER FOR ALL FRAMES

WEIGHT OF CASTINGS						
Frame Type	2' OPENING		3' OPENING			
	Frame	Cover (Std.)	Frame	2-Piece Cover		
				Inside	Outside	Total
I	155 Lbs.	190 Lbs.	220 Lbs.	190 Lbs.	220 Lbs.	410 Lbs.
II	145 Lbs.	190 Lbs.	255 Lbs.	190 Lbs.	220 Lbs.	410 Lbs.
III	90 Lbs.	190 Lbs.	180 Lbs.	190 Lbs.	220 Lbs.	410 Lbs.

APPLICABLE FOR STRUCTURES: S-2

2010 FDOT Design Standards

SUPPLEMENTARY DETAILS FOR MANHOLES AND INLETS

Last Revision 07/01/05 | Sheet No. 1 of 5 | Index No. 201

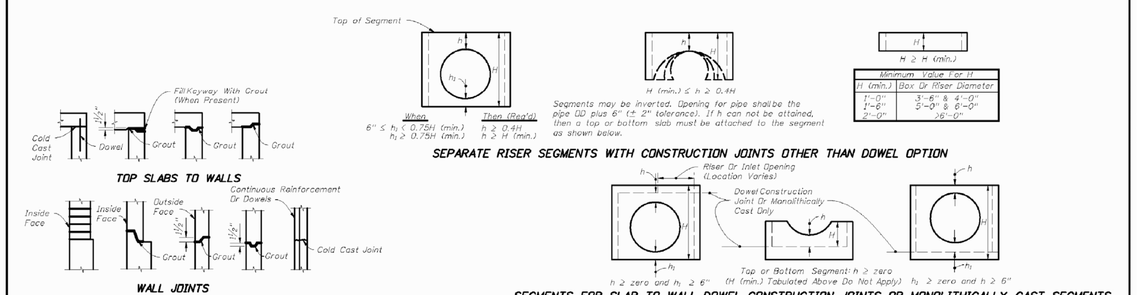

Minimum Value For H	
H (min.)	Box Or Riser Diameter
1'-0"	3'-6" & 4'-0"
1'-6"	5'-0" & 6'-0"
2'-0"	≥6'-0"

SEPARATE RISER SEGMENTS WITH CONSTRUCTION JOINTS OTHER THAN DOWEL OPTION

1. One or more types of joints may be used in a single structure, except brick wall structure. Brick wall construction is permitted on circular units only.
2. All grouted joints are to have a maximum thickness of 1".
3. Keyways are to be a minimum of 1½" deep.
4. Joint dowels are to be #4 bars, 12" long with a minimum of 6 bars per joint approximately evenly spaced for circular structures or at maximum 12" spacing for rectangular structures. Bars may be either Adhesive Bonded Dowels in accordance with Specification Section 416, or placed approximately 6" into fresh concrete leaving the remainder to extend into the secondary cast. Welded wire fabric may be substituted for the dowel bar in accordance with the equivalent steel area table on Sheet 4.
5. Minimum cover on dowel reinforcing bars is 2" to outside face of structure.
6. Joints between wall segments and between wall segments and top or bottom slabs may be sealed either by preformed plastic gasket material using the procedures given in Section 430-7.3.1 of the Specifications or by non-shrink grout, in accordance with Section 934 of the Specifications.
7. Approved product inserts may be used in lieu of dowel embedment.

OPTIONAL CONSTRUCTION JOINTS

APPLICABLE FOR STRUCTURES: S-2

SEGMENTS FOR SLAB TO WALL DOWEL CONSTRUCTION JOINTS OR MONOLITHICALLY CAST SEGMENTS

NOTE: h may be less than 6" when approved by the Engineer, but not for inlet segments at finish grade elevation.

COMPARATIVE SIDE VIEWS

MINIMUM DIMENSIONS FOR BOX AND RISER SEGMENTS

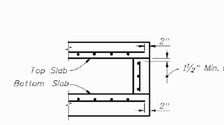

(NOTE: NOT APPLICABLE AROUND MANHOLE AND RISER OPENINGS)

REBAR STRAIGHT END EMBEDMENT FOR TOP AND BOTTOM SLABS

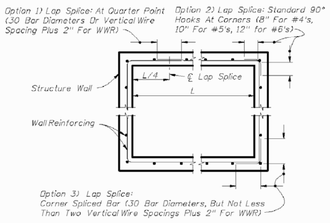

WALL REINFORCING SPLICE DETAILS

2010 FDOT Design Standards

SUPPLEMENTARY DETAILS FOR MANHOLES AND INLETS

Last Revision 07/01/07 | Sheet No. 3 of 5 | Index No. 201

SYM	DESCRIPTION	DATE	APPR

NAVFAC

ANDERSON DRACE JOINT VENTURE

FOR REFERENCE ONLY

SEAL

EGH ARCHITECTS
eleyguildhardy.com
A/E INFO

APPROVED

FOR COMMANDER NAVFAC

ACTIVITY

SATISFACTORY TO | DATE | DES | DRW | CHK

DEPARTMENT OF THE NAVY
NAVAL FACILITIES ENGINEERING COMMAND SOUTHEAST
(PT GULFCOAST)
CORRY STATION

NAVAL FACILITIES ENGINEERING COMMAND
NAVAL AIR STATION JACKSONVILLE, FL
PENSACOLA, FLORIDA

BUILDING P-724 Corry "A" School BEQ
REVISED [2+0] MODULE DESIGN

DRAINAGE DETAILS

SCALE: NONE

EPROJECT NO.: 10-045

CONSTR. CONTR. NO. N69450-10-C-0755

NAVFAC DRAWING NO. 15050366

SHEET 21 OF 204

C008

EQUIVALENT STEEL AREA TABLE								
SCHEDULE	GRADE 60 REINFORCING BAR		EQUIVALENT GRADE 40 REINFORCING BAR		EQUIVALENT 65 KSI SMOOTH WELDED WIRE REINFORCEMENT		EQUIVALENT 70 KSI DEFORMED WELDED WIRE REINFORCEMENT	
	Bar Size & Spacing	Steel Area (in²/ft)	Bar Size & Spacing	Min. Steel Area (in²/ft)	Style Designation	Min. Steel Area (in²/ft)	Style Designation	Min. Steel Area (in²/ft)
A	#3 @ 6½" Ctrs. #4 @ 12" Ctrs.	0.20	#3 @ 4½" Ctrs. #4 @ 8" Ctrs. #5 @ 12" Ctrs.	0.30	3"x3"–W4.6xW4.6 4"x4"–W6.2xW6.2 6"x6"–W9.2xW9.2	0.1846	3"x3"–D4.3xD4.3 4"x4"–D5.7xD5.7 6"x6"–D8.6xD8.6	0.1714
B	#3 @ 5½" Ctrs. #4 @ 10" Ctrs.	0.24	#3 @ 3½" Ctrs. #4 @ 6½" Ctrs. #5 @ 10" Ctrs.	0.36	3"x3"–W5.5xW5.5 4"x4"–W7.4xW7.4 6"x6"–W11.1xW11.1	0.2215	3"x3"–D5.1xD5.1 4"x4"–D6.9xD6.9 6"x6"–D10.3xD10.3	0.2057
Special 1	#3 @ 5" Ctrs. #4 @ 9" Ctrs.	0.267	#3 @ 3" Ctrs. #4 @ 6" Ctrs. #5 @ 9" Ctrs.	0.40	3"x3"–W6.2xW6.2 4"x4"–W8.2xW8.2 6"x6"–W12.3xW12.3	0.2465	3"x3"–D5.7xD5.7 4"x4"–D7.6xD7.6 6"x6"–D11.4xD11.4	0.2289
C	#3 @ 3½" Ctrs. #4 @ 6½" Ctrs. #5 @ 10" Ctrs.	0.37	#4 @ 4" Ctrs. #5 @ 6½" Ctrs. #6 @ 9½" Ctrs.	0.555	3"x3"–W8.5xW8.5 4"x4"–W11.4xW11.4 6"x6"–W17.1xW17.1	0.3415	3"x3"–D7.9xD7.9 4"x4"–D10.6xD10.6 6"x6"–D15.9xD15.9	0.3171
D	#4 @ 4½" Ctrs. #5 @ 7" Ctrs. #6 @ 10" Ctrs.	0.53	#4 @ 3" Ctrs. #5 @ 4½" Ctrs. #6 @ 6½" Ctrs.	0.795	3"x3"–W12.2xW12.2 4"x4"–W16.3xW16.3 6"x6"–W24.5xW24.5	0.4892	3"x3"–D11.4xD11.4 4"x4"–D15.1xD15.1 6"x6"–D22.7xD22.7	0.4543
E	#4 @ 3" Ctrs. #5 @ 5" Ctrs. #6 @ 7" Ctrs.	0.73	#5 @ 3½" Ctrs. #6 @ 4½" Ctrs. #7 @ 6½" Ctrs.	1.095	3"x3"–W16.8xW16.8 4"x4"–W22.5xW22.5 6"x6"–W33.7xW33.7	0.6738	3"x3"–D15.6xD15.6 4"x4"–D20.9xD20.9 6"x6"–D31.3xD31.3	0.6257
F	#5 @ 3½" Ctrs. #6 @ 5" Ctrs. #7 @ 7" Ctrs.	1.06	#6 @ 3" Ctrs. #7 @ 4½" Ctrs. #8 @ 6" Ctrs.	1.59	3"x3"–W24.5xW24.5 4"x4"–W32.6xW32.6 6"x6"–W48.9xW48.9	0.9785	3"x3"–D22.7xD22.7 4"x4"–D30.3xD30.3 6"x6"–D45.4xD45.4	0.9086
Special 2	#5 @ 3" Ctrs. #6 @ 4" Ctrs. #7 @ 5½" Ctrs.	1.24	#7 @ 4" Ctrs. #8 @ 5" Ctrs.	1.86	3"x3"–W28.6xW28.6 4"x4"–W38.2xW38.2 6"x6"–W57.2xW57.2	1.1446	3"x3"–D26.6xD26.6 4"x4"–D35.4xD35.4 6"x6"–D53.1xD53.1	1.0629
G	#6 @ 3½" Ctrs. #7 @ 5" Ctrs.	1.46	#7 @ 3" Ctrs. #8 @ 4" Ctrs.	2.19	3"x3"–W33.7xW33.7 4"x4"–W44.9xW44.9	1.3477	3"x3"–D31.3xD31.3 4"x4"–D41.7xD41.7	1.2514

GENERAL NOTES

1. For square or rectangular precast drainage structures, either deformed or smooth welded wire reinforcement may be used provided:
   a) The smooth welded wire reinforcement shall comply with ASTM A185 and deformed welded wire reinforcement shall comply with ASTM A497.
   b) Width and length of the unit is four times the spacing of the cross wires.
   c) Wire reinforcement shall be continuous around the box, and lapped in accordance with Option 1 or 3 as shown in the Wall Reinforcing Splice Details.
2. Horizontal steel in the walls of rectangular structures shall be lap spliced in accordance with Option 1, 2 or 3 as shown in the Wall Reinforcing Splice Details.
3. Welding of splices and laps is permitted. The requirements and restrictions placed on welding in AASHTO M259 shall apply.
4. Rebar straight end embedment of peripheral reinforcement may be used in lieu of ACI standard hooks for top and bottom slabs except when hooks are specifically called for in the plans or standard drawings.
5. Concrete as specified in ASTM C478, (4000 psi) may be used in lieu of Class II concrete in precast items manufactured in plants which meet the requirements of Section 449 of the Specifications.
6. Precast opening for pipe shall be the pipe OD plus 6" (± 2" tolerance). Mortar used to seal the pipe into the opening will be of such a mix that shrinkage will not cause leakage into or out of the structure. Dry-pack mortar may be used in lieu of brick and mortar construction to seal openings less than 2½" wide.
7. For pay item purposes, the height used to determine if a drainage structure is less than or greater than 10 feet shall be computed using
   (a) the elevation of the top of the manhole lid,
   (b) the grate elevation or the theoretical gutter grade elevation of an inlet, or
   (c) the outside top elevation of a junction box less the flow line elevation of the lowest pipe or to top of sump floor.

NOTES FOR PRECAST OPTIONS & EQUIVALENT REINFORCEMENT SUBSTITUTION

1. Details for optional precast inlet construction up to depths of 15' are shown on the inlet indexes.
2. When precast units are used in conjunction with Alt. "B" Structure Bottoms, Index No. 200, the interior dimensions of an Alt. "B" Bottom can be adjusted to reflect these inlet interior dimensions.
3. Concrete which meets the requirements of ASTM C478 or Class IV must be used for precast structures constructed with 6" wall or slab thickness.
4. Reinforcement can be either deformed bar reinforcement or welded wire reinforcement. Bar reinforcement other than 60 ksi may be used, however only two grades are recognized: Grade 40 and Grade 60. Smooth welded wire reinforcement, will be recognized as having a design strength of 65 ksi and deformed welded wire reinforcement will be recognized as having a design strength of 70 ksi. The area of reinforcement required may be adjusted in accordance with the Equivalent Steel Area Table provided. For bars and spacings not given, the steel area required can be determined by the following equations:

$$\text{Grade 40 Steel Area} = A_s40 = \frac{60}{40} \times A_s60$$

$$\text{Smooth Welded Wire Reinforcement Steel Area} = A_s65 = \frac{60}{65} \times A_s60$$

$$\text{Deformed Welded Wire Reinforcement Steel Area} = A_s70 = \frac{60}{70} \times A_s60$$

continued...

When a reduced area of reinforcement is provided, any maximum bar spacing shown must also be reduced as determined by the following equations, unless otherwise shown:

Max. Grade 40 Bar Spacing = Grade 60 Bar Spacing
Max. Smooth Welded Wire Spacing = Grade 60 Bar Spacing x 0.86
Max. Deformed Welded Wire Spacing = Grade 60 Bar Spacing x 0.74

When an increased area of reinforcing is provided, then the maximum bar spacing may be increased by the squared ratio of increased steel area, but not to exceed 12":

$$\text{Max. Bar Spacing Provided} \le \text{Max. Bar Spacing Required} \times \left(\frac{\text{Steel Area Provided}}{\text{Min. Steel Area Required}}\right)^2$$

In no case will reinforcement with wires smaller than W3.1 or D3.1, or spacings greater than 8" be permitted. Bar reinforcement shall show the minimum yield designation grade mark or either the number 60 or one (1) grade mark line to be acceptable at the higher value. Maximum bar spacing shall not be greater than two (2) times the slab thickness with a maximum spacing of 12" or three (3) times the wall thickness, with a maximum spacing of 18" for vertical bars and 12" for horizontal bars.

APPLICABLE FOR STRUCTURES:
S–2, S–3, S–5, S–6

2010 FDOT Design Standards

SUPPLEMENTARY DETAILS FOR MANHOLES AND INLETS

Last Revision 07/01/09 | Sheet No. 4 of 5 | Index No. 201

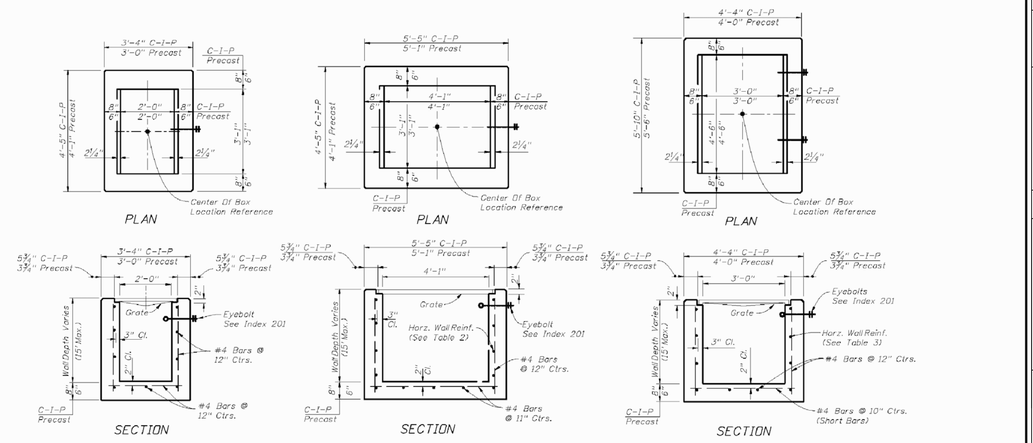

HORIZONTAL WALL REINFORCING SCHEDULES (TABLE 1)

WALL DEPTH	SCHEDULE	AREA (in.²/ft.)	MAX. SPACING BARS	MAX. SPACING WWF
0'–15'	A12	0.20	12"	8"

TYPE C

Recommended Maximum Pipe Size:
2'–0" Wall – 18" Pipe
3'–1" Wall – 24" Pipe (18" where an 18" pipe enters a 2'–0" wall)

HORIZONTAL WALL REINFORCING SCHEDULES (TABLE 2)

WALL DEPTH	SCHEDULE	AREA (in.²/ft.)	MAX. SPACING BARS	MAX. SPACING WWF
0'–8'	A12	0.20	12"	8"
8'–10'	A6	0.20	6"	5"
10'–13'	A4	0.20	4"	3"
10'–15'	B5.5	0.24	5½"	5"

TYPE D

Recommended Maximum Pipe Size:
3'–1" Wall – 24" Pipe
4'–1" Wall – 36" Pipe

HORIZONTAL WALL REINFORCING SCHEDULES (TABLE 3)

WALL DEPTH	SCHEDULE	AREA (in.²/ft.)	MAX. SPACING BARS	MAX. SPACING WWF
0'–5'	A12	0.20	12"	8"
0'–7.5'	A6	0.20	6"	5"
7.5'–10'	B5.5	0.24	5½"	5"
10'–15'	C6.5	0.37	6½"	6"

TYPE E

Recommended Maximum Pipe Size:
3'–0" Wall – 24" Pipe
4'–6" Wall – 36" Pipe

APPLICABLE FOR STRUCTURES:
S–3, S–5, S–6

2010 FDOT Design Standards

DITCH BOTTOM INLET TYPES C, D, E & H

Last Revision 07/01/09 | Sheet No. 1 of 7 | Index No. 232

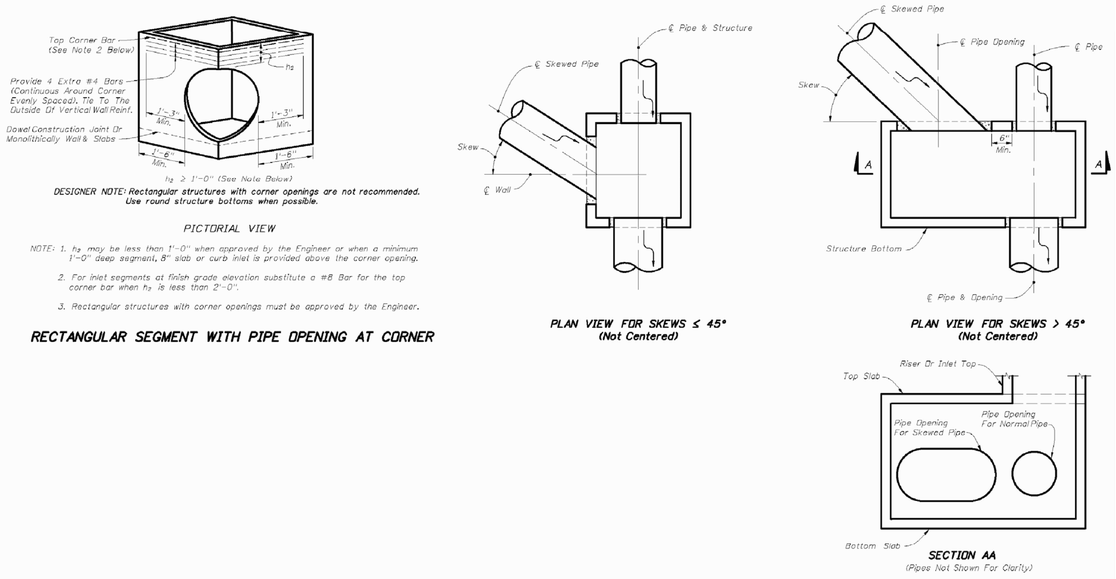

DESIGNER NOTE: Rectangular structures with corner openings are not recommended. Use round structure bottoms when possible.

NOTE: 1. h_2 may be less than 1'-0" when approved by the Engineer or when a minimum 1'-0" deep segment, 8" slab or curb inlet is provided above the corner opening.
2. For inlet segments at finish grade elevation substitute a #8 Bar for the top corner bar when h_2 is less than 2'-0".
3. Rectangular structures with corner openings must be approved by the Engineer.

RECTANGULAR SEGMENT WITH PIPE OPENING AT CORNER

DETAILS FOR SKEWED PIPES IN RECTANGULAR STRUCTURES

APPLICABLE FOR STRUCTURES:
S–2, S–3, S–5, S–6

2010 FDOT Design Standards

SUPPLEMENTARY DETAILS FOR MANHOLES AND INLETS

Last Revision 07/01/07 | Sheet No. 5 of 5 | Index No. 201

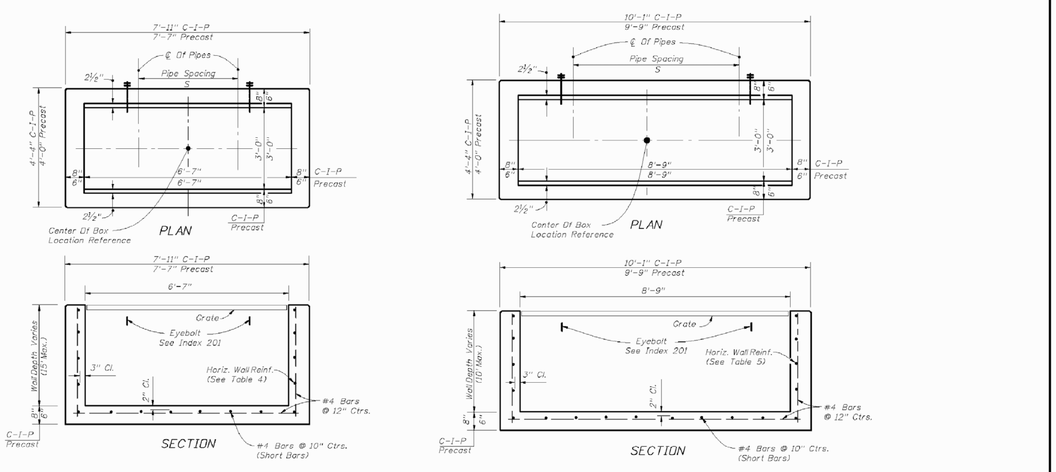

HORIZONTAL WALL REINFORCING SCHEDULES (TABLE 4)

WALL DEPTH	SCHEDULE	AREA (in.²/ft.)	MAX. SPACING BARS	MAX. SPACING WWF
0'–5'	B5.5	0.24	5½"	5"
5'–7'	C6.5	0.37	6½"	6"
7'–15'	D4.5	0.53	4½"	4"

TYPE H (2 & 3-GRATE INLET)

Recommended Maximum Pipe Size:
3'–0" Wall – 24" Pipe
6'–7" Wall – 1-60" Pipe
Or 2-24" Pipe (S=3'-5")

HORIZONTAL WALL REINFORCING SCHEDULES (TABLE 5)

WALL DEPTH	SCHEDULE	AREA (in.²/ft.)	MAX. SPACING BARS	MAX. SPACING WWF
0'–5'	C3.5	0.37	3½"	3"
5'–10'	D4.5	0.53	4½"	4"

TYPE H (4-GRATE INLET)

Recommended Maximum Pipe Size:
3'–0" Wall – 24" Pipe
8'–9" Wall – 1-78" Pipe
Or 2-30" Pipe (S=4'-3")

GENERAL NOTES
See Sheet 3 of 7.

APPLICABLE FOR STRUCTURES:
S–3, S–5, S–6

2010 FDOT Design Standards

DITCH BOTTOM INLET TYPES C, D, E & H

Last Revision 07/01/09 | Sheet No. 2 of 7 | Index No. 232

APPR | DATE | DESCRIPTION | SYM

NAVFAC

ANDERSON DRACE JOINT VENTURE

FOR REFERENCE ONLY

SEAL

EGH ARCHITECTS
eleyguildhardy.com
A/E INFO

APPROVED
FOR COMMANDER NAVFAC
ACTIVITY
SATISFACTORY TO | DATE
DES | DRW | CHK

DEPARTMENT OF THE NAVY
NAVAL FACILITIES ENGINEERING COMMAND
(PT GULFCOAST)
CORRY STATION

NAVAL FACILITIES ENGINEERING COMMAND SOUTHEAST
NAVAL AIR STATION JACKSONVILLE, FL
PENSACOLA, FLORIDA

BUILDING P-724 Corry "A" School BEQ
REVISED [2+0] MODULE DESIGN

DRAINAGE DETAILS

SCALE: NONE
EPROJECT NO.: 10-045
CONSTR. CONTR. NO. N69450-10-C-0755
NAVFAC DRAWING NO. 15050367
SHEET 22 OF 204
C009

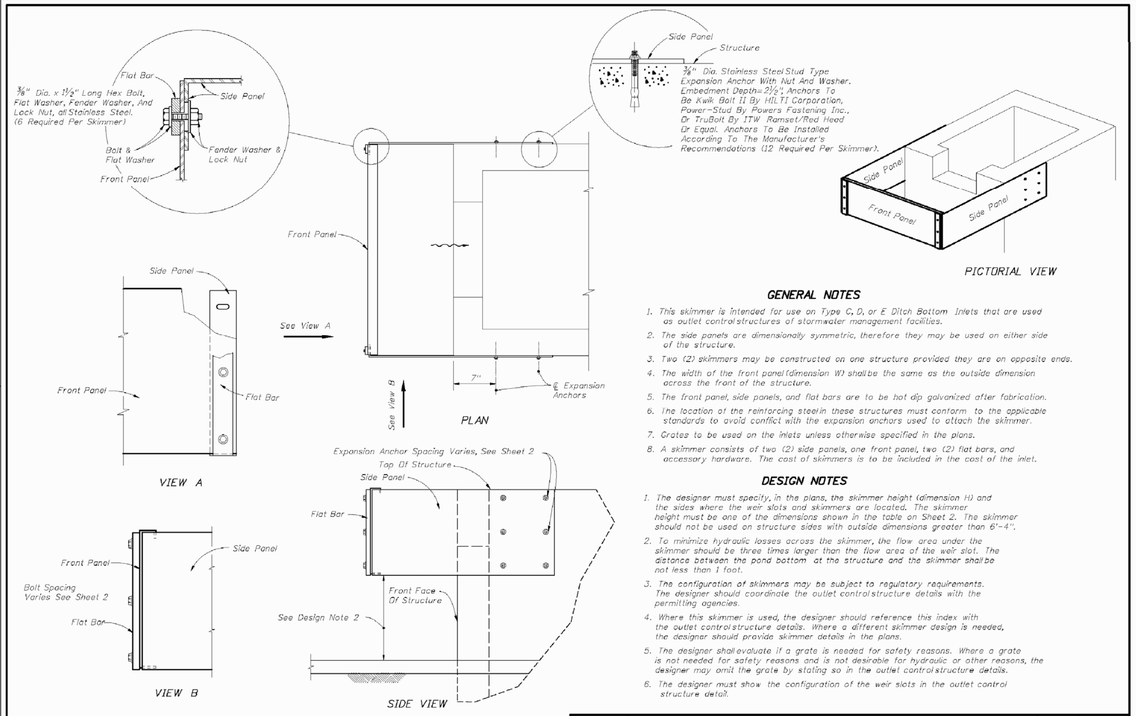

GENERAL NOTES

1. This skimmer is intended for use on Type C, D, or E Ditch Bottom Inlets that are used as outlet control structures of stormwater management facilities.
2. The side panels are dimensionally symmetric, therefore they may be used on either side of the structure.
3. Two (2) skimmers may be constructed on one structure provided they are on opposite ends.
4. The width of the front panel (dimension W) shall be the same as the outside dimension across the front of the structure.
5. The front panel, side panels, and flat bars are to be hot dip galvanized after fabrication.
6. The location of the reinforcing steel in these structures must conform to the applicable standards to avoid conflict with the expansion anchors used to attach the skimmer.
7. Grates to be used on the inlets unless otherwise specified in the plans.
8. A skimmer consists of two (2) side panels, one front panel, two (2) flat bars, and accessory hardware. The cost of skimmers is to be included in the cost of the inlet.

DESIGN NOTES

1. The designer must specify, in the plans, the skimmer height (dimension H) and the sides where the weir slots and skimmers are located. The skimmer height must be one of the dimensions shown in the table on Sheet 2. The skimmer should not be used on structure sides with outside dimensions greater than 6'-4".
2. To minimize hydraulic losses across the skimmer, the flow area under the skimmer should be three times larger than the flow area of the weir slot. The distance between the pond bottom at the structure and the skimmer shall be not less than 1 foot.
3. The configuration of skimmers may be subject to regulatory requirements. The designer should coordinate the outlet control structure details with the permitting agencies.
4. Where this skimmer is used, the designer should reference this index with the outlet control structure details. Where a different skimmer design is needed, the designer should provide skimmer details in the plans.
5. The designer shall evaluate if a grate is needed for safety reasons. Where a grate is not needed for safety reasons and is not desirable for hydraulic or other reasons, the designer may omit the grate by stating so in the outlet control structure details.
6. The designer must show the configuration of the weir slots in the outlet control structure detail.

APPLICABLE FOR STRUCTURES:
S-5

2010 FDOT Design Standards

SKIMMER FOR OUTLET CONTROL STRUCTURES

Last Revision	Sheet No.
00	1 of 2
Index No.	
240	

DIMENSIONS AND QUANTITIES

	D	X	A	B	C	E	F	G	H ■	M Single Pipe	M Double Pipe	M Triple Pipe	M Quad. Pipe	N	5½" CONCRETE SLAB (CY) ◪ Single Pipe	Double Pipe	Triple Pipe	Quad. Pipe	SODDING (SQ. YDS.) Single Pipe	Double Pipe	Triple Pipe	Quad. Pipe
1:2 Slope	15"	2'-7"	1.92'	2.18'	4.10'	2.08'	5'	1.22'	2.9'	4.63'	7.21'	9.79'	12.37'	1.19'	0.38	0.58	0.77	0.98	21	24	27	30
	18"	2'-10"	1.97'	2.74'	4.71'	2.56'	6'	1.41'	3.4'	4.92'	7.75'	10.58'	13.42'	1.21'	0.44	0.65	0.87	1.09	22	25	28	31
	24"	3'-5"	2.06'	3.85'	5.91'	3.56'	7'	1.73'	3.4'	5.50'	8.92'	12.33'	15.75'	1.25'	0.54	0.83	1.12	1.42	24	28	32	35
	30"	4'-3"	2.15'	4.95'	7.10'	4.56'	8'	2.00'	3.4'	6.08'	10.33'	14.58'	18.83'	1.29'	0.66	1.09	1.50	1.91	26	31	36	40
	36"	5'-1"	2.25'	6.08'	8.33'	5.56'	9'	2.24'	3.4'	6.67'	11.75'	16.83'	21.92'	1.33'	0.81	1.38	1.95	2.51	28	34	39	45
	42"	6'-0"	2.34'	7.21'	9.50'	6.56'	10'	2.45'	3.4'	7.25'	13.25'	19.25'	25.25'	1.38'	0.97	1.70	2.45	3.19	30	37	43	50
	48"	6'-9"	2.43'	8.33'	10.76'	7.58'	11'	2.65'	3.4'	7.83'	14.58'	21.33'	28.08'	1.42'	1.13	2.04	2.93	3.84	32	39	47	54
	54"	7'-8"	2.52'	9.44'	11.96'	8.56'	12'	2.83'	3.4'	8.42'	16.08'	23.75'	31.42'	1.46'	1.31	2.44	3.58	4.72	34	42	51	59
	60"	8'-6"	2.62'	10.56'	13.18'	9.56'	14'	3.00'	4.4'	9.00'	17.50'	26.00'	34.50'	1.50'	1.51	2.89	4.28	5.68	36	45	55	64
	66"	9'-2"	2.71'	11.68'	14.39'	10.58'	15'	3.18'	4.4'	9.58'	18.75'	27.92'	37.08'	1.54'	1.68	3.25	4.84	6.43	38	48	58	68
	72"	10'-0"	2.80'	12.80'	15.60'	11.56'	16'	3.30'	4.4'	10.16'	20.16'	30.16'	40.16'	1.58'	1.89	3.74	5.59	7.45	40	51	62	73
1:4 Slope	15"	2'-7"	2.27'	4.09'	6.36'	4.03'	8'	1.22'	4.0'	4.63'	7.21'	9.79'	12.37'	1.19'	0.52	0.87	1.15	1.44	23	26	29	32
	18"	2'-10"	2.36'	5.17'	7.48'	4.03'	9'	1.41'	4.0'	4.92'	7.75'	10.58'	13.42'	1.21'	0.66	0.99	1.31	1.65	25	28	31	35
	24"	3'-5"	2.53'	7.18' △	9.71'	7.03' △	11'	1.73'	4.0'	5.50'	8.92'	12.33'	15.75'	1.25'	0.85	1.30	1.75	2.20	28	32	36	40
	30"	4'-3"	2.70'	9.95'	11.95'	9.03'	13'	2.00'	4.0'	6.08'	10.33'	14.58'	18.83'	1.29'	1.10	1.74	2.39	3.05	31	36	41	46
	36"	5'-1"	2.87'	11.31' ◇	14.18'	11.03' ◇	15'	2.24'	4.0'	6.67'	11.75'	16.83'	21.92'	1.33'	1.33	2.21	3.08	3.96	34	40	46	52
	42"	6'-0"	3.05'	13.17'	16.42'	13.03'	17'	2.45'	4.0'	7.25'	13.25'	19.25'	25.25'	1.38'	1.58	2.76	3.91	5.09	38	44	51	58
	48"	6'-9"	3.22'	15.43'	18.65'	19.03'	19'	2.65'	4.0'	7.83'	14.58'	21.33'	28.08'	1.42'	1.85	3.30	4.73	6.17	41	48	56	63
	54"	7'-8"	3.39'	17.49'	20.88'	17.03'	21'	2.83'	4.0'	8.42'	16.08'	23.75'	31.42'	1.46'	2.14	3.95	5.77	7.58	44	52	61	69
	60"	8'-6"	3.56'	19.55'	23.11'	19.03'	23'	3.00'	4.0'	9.00'	17.50'	26.00'	34.50'	1.50'	2.45	4.66	6.87	9.07	47	56	66	75
	66"	9'-2"	3.73'	21.62'	25.35'	21.03'	25'	3.18'	4.0'	9.58'	18.75'	27.92'	37.08'	1.54'	2.88	5.54	8.18	10.84	49	59	69	80
	72"	10'-0"	3.91'	23.68'	27.59'	23.03'	27'	3.30'	4.0'	10.16'	20.16'	30.16'	40.16'	1.58'	3.34	6.61	9.87	13.13	52	63	74	85

■ See General Note No. 3. See Sheet 5 Of 6 For 3" Slab Quantities

■ Values shown for estimating pipe quantities and are for information only.

B E
△ 6.42' △ 6.25' Dimensions permitted to allow use of 8' standard pipe lengths.
◇ 10.40' ◇ 10.10' Dimensions permitted to allow use of 12' standard pipe lengths.
△◇ Concrete slab shall be deepened to form bridge across crown of pipe. See section below.

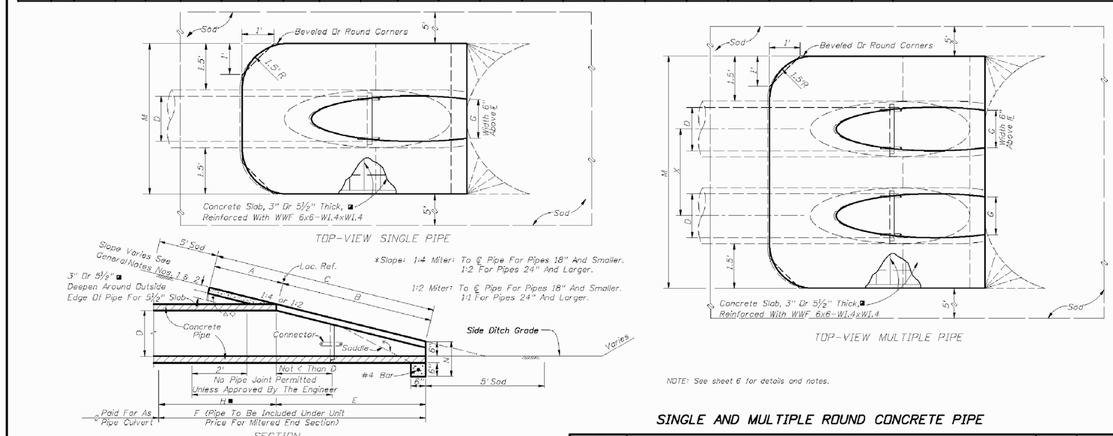

NOTE: See sheet 6 for details and notes.

APPLICABLE FOR STRUCTURES:
S-1, S-4, S-5A, S-7, S-7A, S-8, S-8A, S-9, S-9A, S-10, S-10A

SINGLE AND MULTIPLE ROUND CONCRETE PIPE

2010 FDOT Design Standards

CROSS DRAIN MITERED END SECITON

Last Revision	Sheet No.
02	1 of 6
Index No.	
272	

DIMENSIONS	
Skimmer Height As Specified In The Plans H	Bolt Spacing S

H	D	E	L	S
Inches				
12	3	3 3/16	28	3
14	3	3 3/16	28	4
16	3	3 3/16	28	5
18	3	3 3/16	28	6
20	4	4 3/16	31	6
22	4	4 3/16	31	7
24	4	4 3/16	31	8
26	4	4 3/16	31	9
28	4	4 3/16	31	10
30	5	5 3/16	31	10
32	5	5 3/16	31	11
34	5	5 3/16	31	12
36	6	6 3/16	31	12
38	6	6 3/16	31	13
40	6	6 3/16	31	14

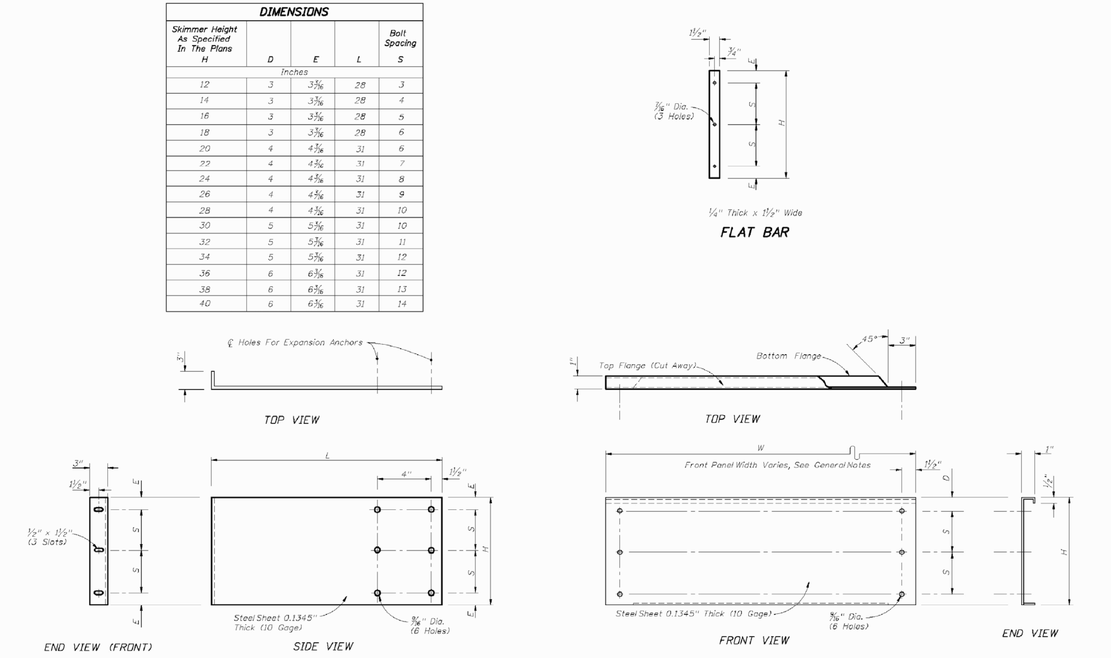

APPLICABLE FOR STRUCTURES:
S-5

2010 FDOT Design Standards

SKIMMER FOR OUTLET CONTROL STRUCTURES

Last Revision	Sheet No.
07/01/07	2 of 2
Index No.	
240	

DIMENSIONS AND QUANTITIES

	D	X	A	B	C	E	F	G	H ■	M Single Pipe	M Double Pipe	M Triple Pipe	M Quad. Pipe	N	5½" CONCRETE SLAB (CY) ◪ Single Pipe	Double Pipe	Triple Pipe	Quad. Pipe	SODDING (SQ. YDS.) Single Pipe	Double Pipe	Triple Pipe	Quad. Pipe
1:2 Slope	15"	2'-7"	2.5'	1.68'	4.18'	1.5'	5.0'	1.23'	3.5'	4.33'	6.92'	9.50'	12.08'	1.04'	0.35	0.54	0.74	0.94	21	24	27	29
	18"	2'-10"	2.5'	2.24'	4.74'	2.0'	6.0'	1.41'	4'	4.58'	7.42'	10.25'	13.08'	1.04'	0.38	0.67	0.87	1.12	22	25	28	31
	24"	3'-5"	2.5'	3.35'	5.85'	3.0'	7.0'	1.73'	4'	5.08'	8.50'	11.92'	15.33'	1.04'	0.47	0.76	1.05	1.34	23	27	31	35
	30"	4'-3"	2.5'	4.47'	6.97'	4.0'	8.0'	2.00'	4'	5.58'	9.83'	14.08'	18.33'	1.04'	0.57	0.96	1.37	1.77	25	30	35	39
	36"	5'-1"	2.5'	5.59'	8.09'	5.0'	9.0'	2.24'	4'	6.08'	11.17'	16.25'	21.33'	1.04'	0.67	1.19	1.72	2.26	27	33	38	44
	42"	6'-0"	2.5'	6.71'	9.21'	6.0'	10.0'	2.45'	4'	6.58'	12.58'	18.58'	24.58'	1.04'	0.78	1.48	2.17	2.87	29	36	43	49
	48"	6'-9"	2.5'	7.83'	10.33'	7.0'	11.0'	2.65'	4'	7.08'	13.83'	20.58'	27.33'	1.04'	0.89	1.71	2.54	3.36	31	38	46	53
	54"	7'-8"	2.5'	8.94'	11.44'	8.0'	12.0'	2.83'	4'	7.58'	15.25'	22.92'	30.58'	1.04'	1.02	2.06	3.10	4.14	33	41	50	58
	60"	8'-6"	2.5'	10.06'	12.66'	9.0'	13.0'	3.00'	4'	8.08'	16.58'	25.08'	33.58'	1.04'	1.14	2.38	3.63	4.88	34	44	53	63
1:4 Slope	15"	2'-7"	2.5'	3.09'	5.59'	3.0'	7.0'	1.23'	4'	4.33'	6.92'	9.50'	12.08'	1.04'	0.44	0.68	0.91	1.15	22	25	28	31
	18"	2'-10"	2.5'	4.12'	6.62'	4.0'	8.0'	1.41'	4'	4.58'	7.42'	10.25'	13.08'	1.04'	0.49	0.77	1.03	1.31	24	27	30	33
	24"	3'-5"	2.5'	6.18'	8.68'	6.0'	10.0'	1.73'	4'	5.08'	8.50'	11.92'	15.33'	1.04'	0.65	1.09	1.38	1.77	27	30	34	38
	30"	4'-3"	2.5'	8.25'	10.75'	8.0'	12.0'	2.00'	4'	5.58'	9.83'	14.08'	18.33'	1.04'	0.81	1.34	1.90	2.44	29	34	39	44
	36"	5'-1"	2.5'	10.31'	12.81'	10.0'	14.0'	2.24'	4'	6.08'	11.17'	16.25'	21.33'	1.04'	0.97	1.68	2.41	3.14	32	38	44	49
	42"	6'-0"	2.5'	12.37'	14.87'	12.0'	16.0'	2.45'	4'	6.58'	12.58'	18.58'	24.58'	1.04'	1.13	2.08	3.06	4.02	35	43	48	55
	48"	6'-9"	2.5'	14.43'	16.93'	14.0'	18.0'	2.65'	4'	7.08'	13.83'	20.58'	27.33'	1.04'	1.29	2.49	3.69	4.88	38	46	53	60
	54"	7'-8"	2.5'	16.49'	18.99'	16.0'	20.0'	2.83'	4'	7.58'	15.25'	22.92'	30.58'	1.04'	1.48	2.98	4.47	5.98	41	49	58	66
	60"	8'-6"	2.5'	18.55'	21.05'	18.0'	22.0'	3.00'	4'	8.08'	16.58'	25.08'	33.58'	1.04'	1.66	3.49	5.31	7.13	44	53	63	72

■ See General Note No. 3. See Sheet 5 Of 6 For 3" Slab Quantities

■ Values shown for estimating pipe quantities and are for information only

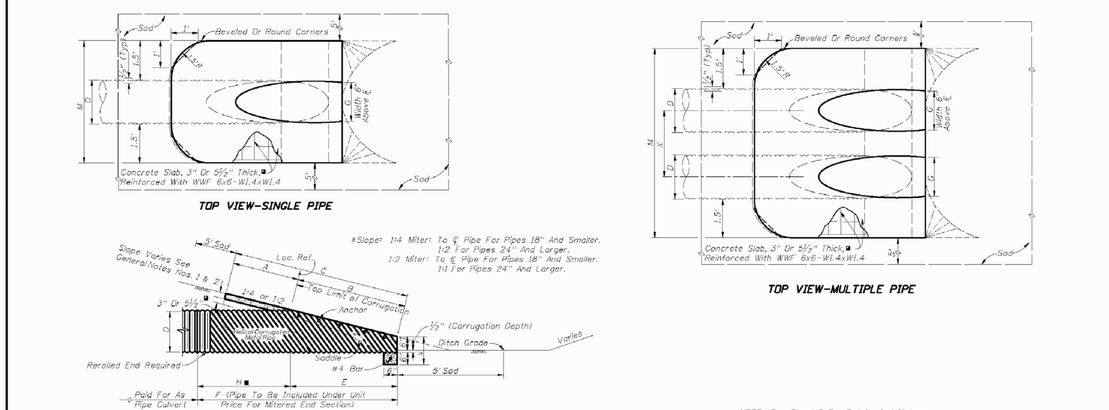

NOTE: See Sheet 6 For Details And Notes.

APPLICABLE FOR STRUCTURES:
S-1, S-4, S-5A, S-7, S-7A, S-8, S-8A, S-9, S-9A, S-10, S-10A

SINGLE AND MULTIPLE ROUND CORRUGATED METAL PIPE

2010 FDOT Design Standards

CROSS DRAIN MITERED END SECTION

Last Revision	Sheet No.
02	2 of 6
Index No.	
272	

FOR REFERENCE ONLY

ANDERSON DRACE JOINT VENTURE

EGH ARCHITECTS eleyguildhardy.com

APPROVED

FOR COMMANDER NAVFAC

ACTIVITY

SATISFACTORY TO DATE

DES DRW CHK

DEPARTMENT OF THE NAVY
NAVAL FACILITIES ENGINEERING COMMAND
(PT GULFCOAST
NAVAL FACILITIES ENGINEERING COMMAND SOUTHEAST
NAVAL AIR STATION JACKSONVILLE, FL
CORRY STATION
PENSACOLA, FLORIDA

BUILDING P-724 Corry "A" School BEQ
REVISED [2+0] MODULE DESIGN

DRAINAGE DETAILS

SCALE: NONE

EPROJECT NO.: 10-045

CONSTR. CONTR. NO. N69450-10-C-0755

NAVFAC DRAWING NO. 15050368

SHEET 23 OF 204

C010

QUANTITIES FOR 3" THICK CONCRETE SLABS (CY)

	D	ROUND-CONCRETE Single Pipe	Double Pipe	Triple Pipe	Quad. Pipe
1:2 Slope	15"	0.27	0.41	0.54	0.67
	18"	0.31	0.45	0.60	0.75
	24"	0.39	0.59	0.79	1.00
	30"	0.46	0.76	1.04	1.32
	36"	0.55	0.94	1.33	1.71
	42"	0.66	1.15	1.66	2.15
	48"	0.78	1.37	1.96	2.57
	54"	0.87	1.62	2.38	3.14
	60"	0.99	1.90	2.81	3.73
	66"	1.11	2.15	3.21	4.27
	72"	1.24	2.46	3.68	4.90
1:4 Slope	15"	0.40	0.61	0.80	1.00
	18"	0.47	0.69	0.91	1.14
	24"	0.60	0.90	1.21	1.52
	30"	0.76	1.19	1.63	2.07
	36"	0.89	1.48	2.05	2.63
	42"	1.05	1.82	2.57	3.34
	48"	1.21	2.15	3.07	4.00
	54"	1.39	2.55	3.72	4.88
	60"	1.59	3.02	4.44	5.86
	66"	1.91	3.66	5.40	7.15
	72"	2.15	4.18	6.24	8.30

	D	ROUND-CMP Single Pipe	Double Pipe	Triple Pipe	Quad. Pipe
1:2 Slope	15"	0.24	0.37	0.51	0.64
	18"	0.26	0.43	0.61	0.78
	24"	0.32	0.52	0.72	0.91
	30"	0.38	0.64	0.91	1.18
	36"	0.44	0.78	1.13	1.48
	42"	0.51	0.96	1.41	1.87
	48"	0.57	1.09	1.63	2.15
	54"	0.65	1.32	1.99	2.66
	60"	0.71	1.49	2.28	3.07
1:4 Slope	15"	0.31	0.47	0.63	0.79
	18"	0.34	0.53	0.71	0.90
	24"	0.44	0.69	0.92	1.18
	30"	0.53	0.88	1.25	1.60
	36"	0.62	1.07	1.53	2.00
	42"	0.71	1.30	1.92	2.52
	48"	0.80	1.54	2.29	3.02
	54"	0.91	1.83	2.74	3.67
	60"	1.02	2.15	3.27	4.39

	Span	Rise	CMP-ARCH Single Pipe	Double Pipe	Triple Pipe	Quad. Pipe
1:2 Slope	17"	13"	0.33	0.49	0.65	0.81
	21"	15"	0.33	0.50	0.67	0.83
	28"	20"	0.37	0.56	0.76	0.95
	35"	24"	0.40	0.62	0.84	1.07
	42"	29"	0.43	0.70	0.98	1.25
	49"	33"	0.49	0.82	1.15	1.48
	57"	38"	0.55	0.95	1.35	1.75
	64"	43"	0.62	1.10	1.57	2.05
	71"	47"	0.69	1.24	1.80	2.35
1:4 Slope	17"	13"	0.38	0.56	0.74	0.92
	21"	15"	0.39	0.59	0.80	0.95
	28"	20"	0.43	0.64	0.88	1.10
	35"	24"	0.49	0.77	1.05	1.33
	42"	29"	0.57	0.92	1.27	1.62
	49"	33"	0.65	1.08	1.50	1.93
	57"	38"	0.76	1.30	1.83	2.37
	64"	43"	0.87	1.55	2.16	2.83
	71"	47"	0.96	1.68	2.43	3.17

	Rise	Span	ELLIPTICAL-CONCRETE Single Pipe	Double Pipe	Triple Pipe	Quad. Pipe
1:2 Slope	12"	18"	0.19	0.33	0.45	0.57
	14"	23"	0.25	0.40	0.55	0.69
	19"	30"	0.34	0.55	0.75	0.95
	24"	38"	0.43	0.71	1.00	1.28
	29"	45"	0.52	0.90	1.27	1.65
	34"	53"	0.62	1.11	1.60	2.09
	38"	60"	0.70	1.29	1.87	2.46
	43"	68"	0.81	1.54	2.26	2.99
	48"	76"	0.93	1.79	2.66	3.53
	53"	83"	1.04	2.04	3.03	4.02
	58"	91"	1.17	2.33	3.49	4.66
1:4 Slope	12"	18"	0.30	0.45	0.61	0.76
	14"	23"	0.38	0.56	0.76	0.95
	19"	30"	0.51	0.79	1.08	1.36
	24"	38"	0.68	1.10	1.53	1.96
	29"	45"	0.86	1.45	2.04	2.63
	34"	53"	1.03	1.81	2.60	3.39
	38"	60"	1.18	2.14	3.10	4.05
	43"	68"	1.38	2.58	3.79	4.99
	48"	76"	1.59	3.05	4.51	5.97
	53"	83"	1.80	3.50	5.19	6.88
	58"	91"	2.04	4.04	6.05	8.05

APPLICABLE FOR STRUCTURES:
S-1, S-4, S-5A, S-7, S-7A, S-8,
S-8A, S-9, S-9A, S-10, S-10A

2010 FDOT Design Standards

CROSS DRAIN MITERED END SECTION

Last Revision 00 | Sheet No. 5 of 6 | Index No. 272

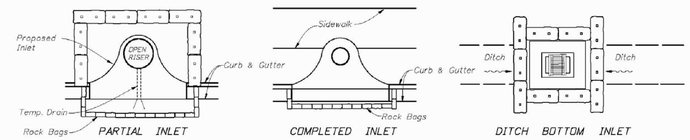

PROTECTION AROUND INLETS OR SIMILAR STRUCTURES

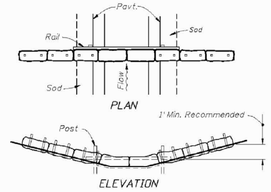

SYNTHETIC BALES OR BALE TYPE BARRIERS FOR PAVED DITCHES

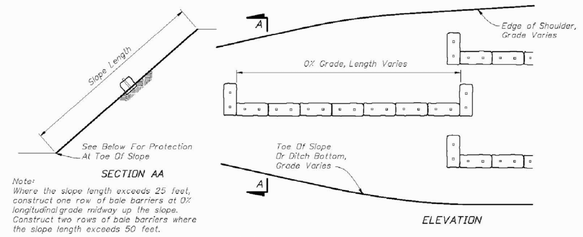

Note:
Where the slope length exceeds 25 feet, construct one row of bale barriers at 0% longitudinal grade midway up the slope. Construct two rows of bale barriers where the slope length exceeds 50 feet.

ALONG FILL SLOPE

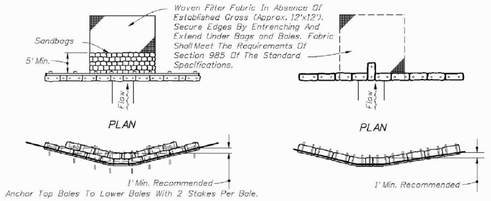

SYNTHETIC BALES OR BALE TYPE BARRIERS FOR UNPAVED DITCHES

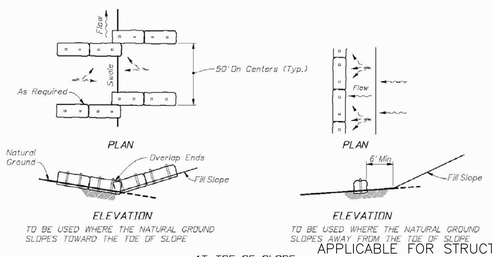

AT TOE OF SLOPE
BARRIERS FOR FILL SLOPES

NOTES FOR SYNTHETIC BALES OR BALE TYPE BARRIERS

1. Type I and II Synthetic Barrier should be spaced in accordance with Chart 1, Sheet 1.
2. Bales shall be trenched 3" to 4" and anchored with 2-1" x 2" (or 1" dia.) x 4' wood stakes. Stakes of other material or shape providing equivalent strength may be used if approved by the Engineer. Stakes other than wood shall be removed upon completion of the project.
3. Rails and posts shall be 2" x 4" wood. Other materials providing equivalent strength may be used if approved by the Engineer.
4. Adjacent bales shall be butted firmly together.
5. Where used in conjunction with silt fence, bales shall be placed on the upstream side of the fence.
6. Bales to be paid for under the contract unit price for Synthetic Bales, LF. The unit price shall include the cost of filter fabric for Type I and II Barriers. Sandbags shall be paid for under the unit price for Sandbagging, CY. Rock bags to be paid for under the contract unit price for Rock Bags, EA.

APPLICABLE FOR STRUCTURES:
S-1, EX-1, EX-2, S-2, S-3,
S-5, S-6

2008 FDOT Design Standards

TEMPORARY EROSION AND SEDIMENT CONTROL

Last Revision 07/01/07 | Sheet No. 2 of 3 | Index No. 102

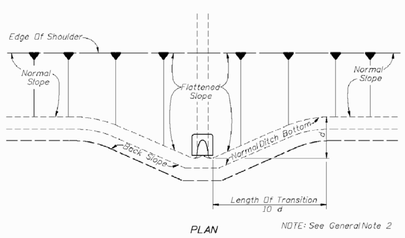

PLAN
NOTE: See General Note 2

SLOPE AND DITCH TRANSITIONS

GENERAL NOTES

1. Unless otherwise designated in the plans, concrete pipe mitered end sections may be used with any type of cross drain pipe: corrugated steel pipe mitered end sections may be used with any type of cross drain pipe except aluminum pipe; and, corrugated aluminum mitered end sections may be used with any type of cross drain pipe except steel pipe. When bituminous coated metal pipe is specified for cross drain pipe, mitered end sections shall be constructed with like pipe or concrete pipe.
2. When the mitered end section pipe is dissimilar to the cross drain pipe, a concrete jacket shall be constructed in accordance with Standard Index 280.
3. Mitered end sections for pipe sizes 15", 18" and 24" round or equivalent pipe arch or elliptical pipe are permitted within the clear zone. When the slope intersection permits, the mitered end section may be located with the culvert opening as close as 8' beyond the outside edge of the shoulder.
4. Slope and ditch transitions shall be used when the normal roadway slope must be flattened to place end section outside clear zone. See detail left.
5. The reinforced concrete slab shall be constructed for all sizes of cross drain pipe and cast in place with Class NS concrete. Slabs shall be 5½" thick unless 3" thickness called for in plans.
6. Concrete pipe used in the assembly of mitered end sections shall be selective lengths to avoid excessive connections.
7. Corrugated metal pipe galvanizing that is damaged during beveling and perforating for mitered end section shall be repaired.
8. That portion of corrugated metal pipe in direct contact with the concrete slab and extending 12" beyond shall be bituminous coated prior to placing of the concrete.
9. When existing multiple cross drain pipes are spaced other than the dimensions shown in this detail, or have non-parallel axes, or have non-uniform sections, the mitered end sections will be constructed either separately as single pipe mitered end sections or collectively as multiple pipe end sections as directed by the Engineer; however, mitered end sections will be paid for each based on each independent pipe end.
10. The cost of all pipe(s), fasteners, reinforcing, connectors, anchors, concrete, sealants, jackets, and coupling bands shall be included in the cost for the mitered end section. Sodding shall be paid for separately under the contract unit price of Performance Turf, SY.
11. Mitered end sections shall be paid for under the contract unit price for Mitered End Section (CD), Each, based on each independent pipe end.

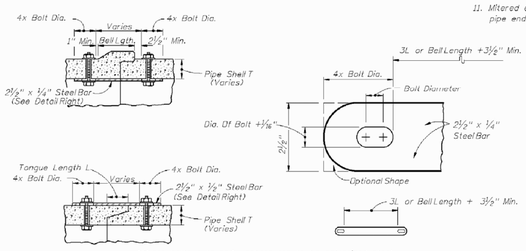

All bars, bolts, nuts and washers are to be galvanized steel.
Bolt diameters shall be ⅜" for 15" to 36" pipe and ⅝" for 42" to 72" pipe.
Two connectors required per joint, located 60° right and left of bottom center of pipe.
Bolt holes in pipe shell are to be drilled.

CONCRETE PIPE CONNECTOR

APPLICABLE FOR STRUCTURES:
S-1, S-4, S-5A, S-7, S-7A, S-8,
S-8A, S-9, S-9A, S-10, S-10A

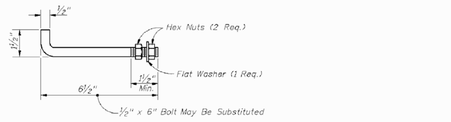

Anchors required for CMP only.

Anchor, washer and nuts to be galvanized steel.

Bend anchor where required to center in concrete slab. Damaged surfaces to be repaired after bending. Anchors are to be spaced a distance equal to four (4) corrugations. Place the anchors in the outside crest of corrugation.

Flat washers to be placed on inside wall of pipe.

Holes in the mitered end pipe are to be drilled or punched; burning not permitted.

ANCHOR DETAIL

SPECIAL DETAILS AND NOTES

2010 FDOT Design Standards

CROSS DRAIN MITERED END SECTION

Last Revision 07/01/09 | Sheet No. 6 of 6 | Index No. 272

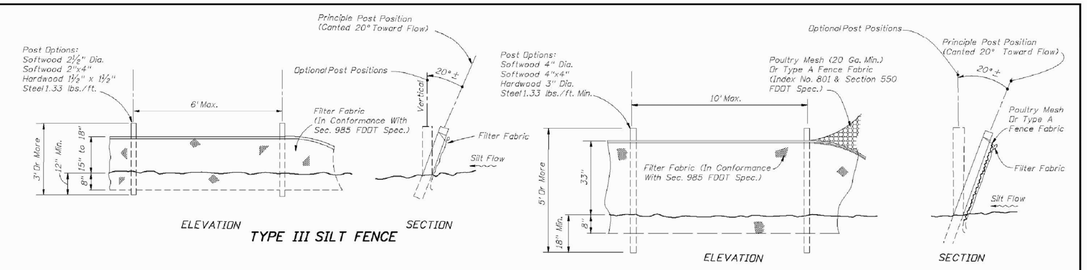

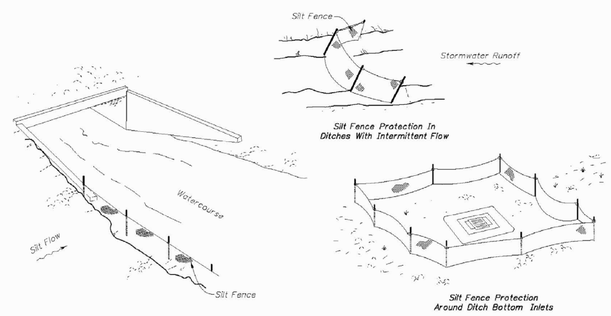

SILT FENCE APPLICATIONS

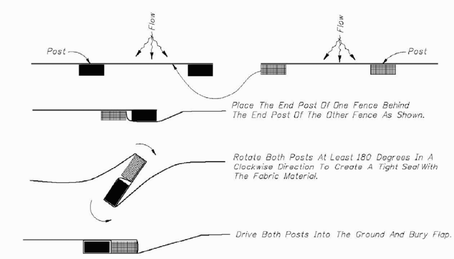

PLAN VIEW
JOINING TWO SILT FENCES

APPLICABLE FOR STRUCTURES:
S-1, EX-1, EX-2, S-2, S-3, S-5, S-6

NOTES FOR SILT FENCES

1. Type III Silt Fence to be used at most locations. Where used in ditches, the spacing for Type III Silt fence shall be in accordance with Chart 1, Sheet 1.
2. Type IV Silt Fence to be used where large sediment loads are anticipated. Suggested use is where fill slope is 1:2 or steeper and length of slope exceeds 25 feet. Avoid use where the detained water may back into travelanes or off the right of way.
3. Do not construct silt fences across permanent flowing watercourses. Silt fences are to be at upland locations and turbidity barriers used at permanent bodies of water.
4. Where used as slope protection, Silt Fence is to be constructed on 0% longitudinal grade to avoid channelizing runoff along the length of the fence.
5. Silt Fence to be paid for under the contract unit price for Staked Silt Fence, (LF).

2008 FDOT Design Standards

TEMPORARY EROSION AND SEDIMENT CONTROL

Last Revision 07/01/05 | Sheet No. 3 of 3 | Index No. 102

SYM	DESCRIPTION	DATE	APPR.

NAVFAC
ANDERSON DRACE JOINT VENTURE
FOR REFERENCE ONLY
SEAL
EGH ARCHITECTS
eleyguildhardy.com
A/E INFO
APPROVED
FOR COMMANDER NAVFAC
ACTIVITY
SATISFACTORY TO DATE
DES DRW CHK

DEPARTMENT OF THE NAVY
NAVAL FACILITIES ENGINEERING COMMAND SOUTHEAST
(PT GULFCOAST
NAVAL AIR STATION JACKSONVILLE, FL
CORRY STATION
PENSACOLA, FLORIDA

NAVAL FACILITIES ENGINEERING COMMAND
NAVAL FACILITIES ENGINEERING COMMAND SOUTHEAST

BUILDING P-724 Corry "A" School BEQ
REVISED [2+0] MODULE DESIGN

DRAINAGE DETAILS

SCALE: NONE
EPROJECT NO.: 10-045
CONSTR. CONTR. NO. N69450-10-C-0755
NAVFAC DRAWING NO. 15050369
SHEET 24 OF 204
C011

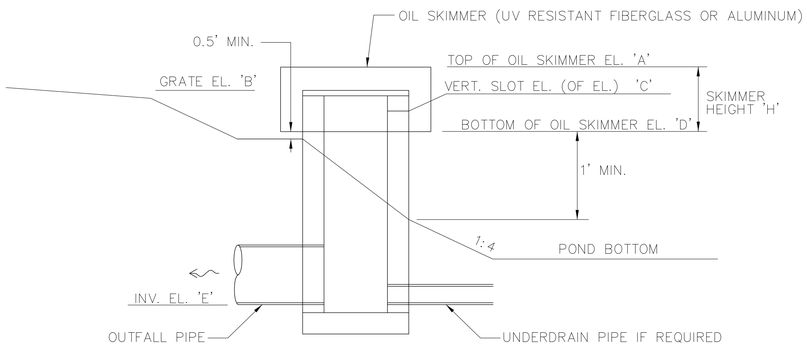

DBI (MODIFIED TYPE C & D) SECTION A–A DETAIL

N.T.S.

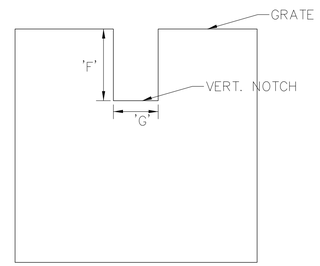

SECTION B–B

N.T.S.

TYPE I

APPLICABLE FOR STRUCTURES:
S–3, S–5, S–6

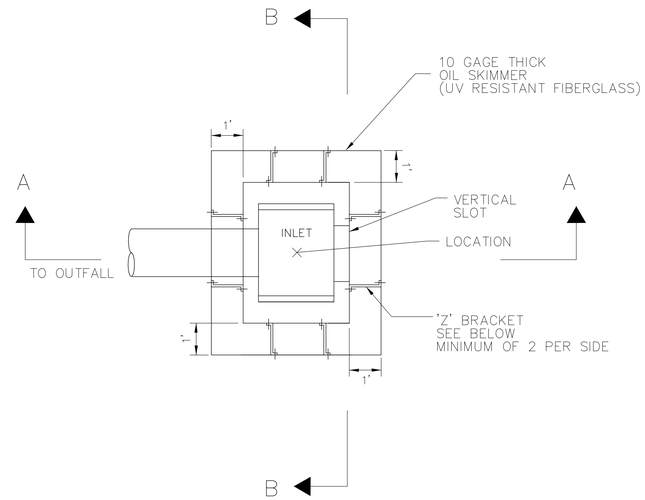

DBI (MODIFIED TYPE C & D) PLAN VIEW DETAIL

N.T.S.

STRUCT ID	INLET TYPE	POND ID	PIPE SIZE	A	B	C	D	E	F (IN)	G (IN)	H (FT)	REMARKS
S–3	D	1A	24"	--	21.3	18.5	--	18.1	33.6	24	--	ONE SLOT IN 3'–1" SIDE, NO SKIMMER
S–6	C	1B	18"	--	20.8	18.5	--	18.2	27.6	24	--	ONE SLOT IN 2'–0" SIDE, NO SKIMMER
S–5	C	2	18"	21.0	21.0	20.1	19.6	15.0	10.8	5.0	1.4	ONE SLOT IN 2' SIDE, SKIMMER REQUIRED

NOTE: ALL OF THE STRUCTURES NOTED ABOVE SHALL BE CONSTRUCTED IN ACCORDANCE WITH FDOT SPECIFICATIONS AND STANDARD INDICES (2010 EDITION)
SLOTS ON STRUCTURES 1A AND 1B ARE TO MATCH SWALE INVERT ELEVATION.
FOR ADDITIONAL INFORMATION ON ALL PROPOSED STRUCTURES SEE FDOT DETAILS PROVIDED ON PLAN SHEETS 7–11

NOTES:
SEE FDOT INDEX 240 AND SHEET C010 FOR ADDITIONAL INFORMATION INCLUDING, BUT NOT LIMITED TO; BOLT AND ANCHOR, SIZE AND TYPE AND HOLE DIMENSIONS.

UNDERDRAIN TYPICAL SECTION
N.T.S.

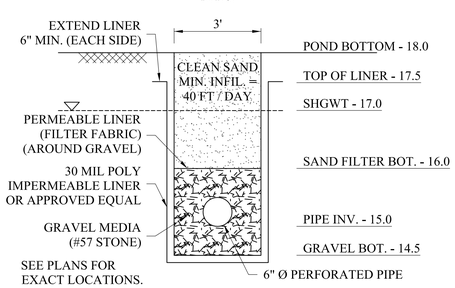

NOTE:

ALL FILTER FABRIC, SAND AND IMPERMEABLE POLY LINER SHALL BE AS PER FDOT SPECIFICATIONS

CLEANOUT TYPICAL SECTION
N.T.S.

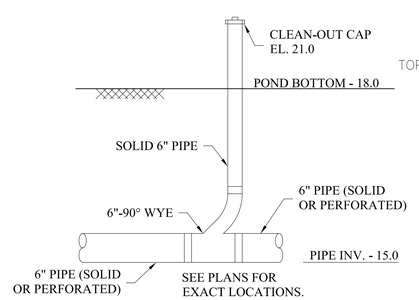

NOTE:
ONE (1) OF THE CLEANOUTS NEAREST THE SIDE BANK SHALL BE MARKED IN 3" INCREMENTS STARTING AT THE BOTTOM OF THE POND AT "0" AND SHALL CONTINUE TO THE TOP OF THE CLEANOUT CAP. EVERY FOOT SHALL BE LABELED 0, 1,2, ETC. ALL MARKINGS SHALL BE COMPLETED IN EASILY IDENTIFIABLE, NON FADING AND READABLE MARKINGS.

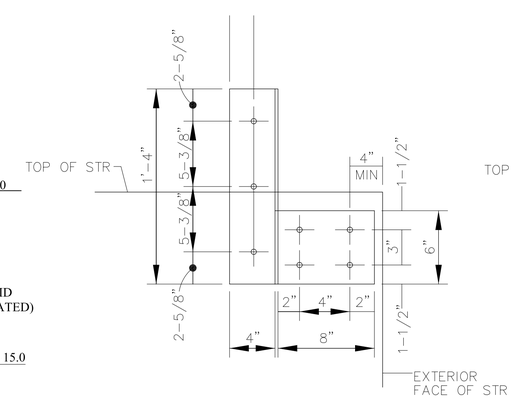

FRONT VIEW

N.T.S.

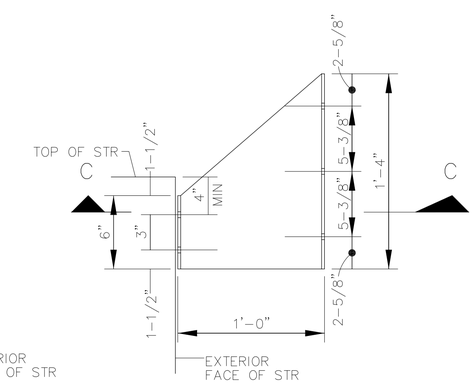

SIDE VIEW

N.T.S.

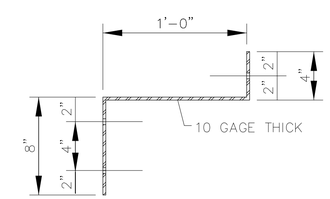

SECTION C–C

N.T.S.

'Z' BRACKET DETAILS (SKIMMER)

N.T.S.

APPLICABLE FOR STRUCTURES:
S–5

DRMP
ENGINEERS • SURVEYORS • PLANNERS • SCIENTISTS
Certificate of Authorization No. 02648
1435 East Piedmont Drive, Suite 210
Tallahassee, Florida 32308
Phone:850.562.9600 WWW.DRMP.COM

SYM	DESCRIPTION	DATE	APPR.

NAVFAC

ANDERSON DRACE JOINT VENTURE

PROFESSIONAL SEAL: ERIC W. GOOCH, PE No. 71686, STATE OF FLORIDA, PROFESSIONAL ENGINEER

EGH ARCHITECTS
eleyguildhardy.com
A/E INFO

APPROVED

FOR COMMANDER NAVFAC
ACTIVITY

SATISFACTORY TO DATE
DES DRW CHK

DEPARTMENT OF THE NAVY
NAVAL FACILITIES ENGINEERING COMMAND SOUTHEAST
IPT GULFCOAST
NAVAL FACILITIES ENGINEERING COMMAND
NAVAL AIR STATION JACKSONVILLE, FL
CORRY STATION
PENSACOLA, FLORIDA
BUILDING P-724 Corry "A" School BEQ
REVISED [2+0] MODULE DESIGN
OUTFALL DETAILS

SCALE: NONE
EPROJECT NO.: 10045
CONSTR. CONTR. NO. N69450-10-C-0755
NAVFAC DRAWING NO. 15050370
SHEET 25 OF 204
C012

MATCHLINE

THOMPSON AVENUE

1st STREET

ROBERTS AVENUE

FUTURE BUILDING

PROPOSED DORMITORY

RAINWATER STORAGE TANK

2" WATER LINE

LIMITS OF WORK

1" WATER METER SEE SHEET L004

SEE PLUMBING RAINWATER HARVESTING–SHEET P401

SOD

METAL EDGING

8–IM

35–JC 3–IM 45–MC 7–IM 32–MC

3–AB 40–JC 3–LI 27–JC 5–SP 3–LI 41–JC 2–LI 34–JC 6–SP 74–JC 3–AB 50–JC 5–SP 35–JC 3–LI

18" PINE 18" PINE 18" LAUREL 48" LIVE OAK 3–LI 8–JC

16"LIVE OAK 16"PALM 16"PALM 27" LIVE OAK

23" LIVE OAK 25" LIVE OAK 40" LIVE OAK 20" LIVE OAK 30" LIVE OAK 20" LIVE OAK 24" LIVE OAK

North

SCALE: 1"=30'–0"

NOTE:
If required, contractor shall be responsible for adequately watering all newly planted landscaping, & sodded areas not covered by the permanent irrigation system by installing & operating a temporary watering system for a period of one (1) year after date of final acceptance. The contractor shall include in his bid all materials, labor & equipment necessary for the installation & operation of a watering method of the contractor's discretion to include watering truck, in ground or above ground system and approved by the Contracting Officer. After the one (1) year period, the contractor shall disassemble and remove from the site the temporary watering system and shall repair any disturbed areas.

LEGEND

PROPOSED TREE

EX. TREE TO REMAIN

EX. LIGHT

1 / L001 LANDSCAPE PLAN

SYM | DESCRIPTION | DATE | APPR

NAVFAC

ANDERSON DRACE JOINT VENTURE

REGISTERED LANDSCAPE ARCHITECT JAMES E. PRONK No. 0 MAY 24, 2011 STATE OF FLORIDA

EGH ARCHITECTS

A/E INFO

APPROVED

FOR COMMANDER NAVFAC

ACTIVITY

SATISFACTORY TO DATE JAN 17, 2012

DES | DRW | CHK

DEPARTMENT OF THE NAVY
NAVAL FACILITIES ENGINEERING COMMAND SOUTHEAST
IPT GULFCOAST
NAVAL FACILITIES ENGINEERING COMMAND
NAVAL AIR STATION JACKSONVILLE, FL
CORRY STATION
PENSACOLA, FLORIDA

BUILDING P-724 Corry "A" School BEQ
REVISED [2+0] MODULE DESIGN

LANDSCAPE PLAN

SCALE: AS INDICATED

EPROJECT NO.: 10-045

CONSTR. CONTR. NO. N69450-10-C-0755

NAVFAC DRAWING NO. 15050371

SHEET 26 OF 204

L001

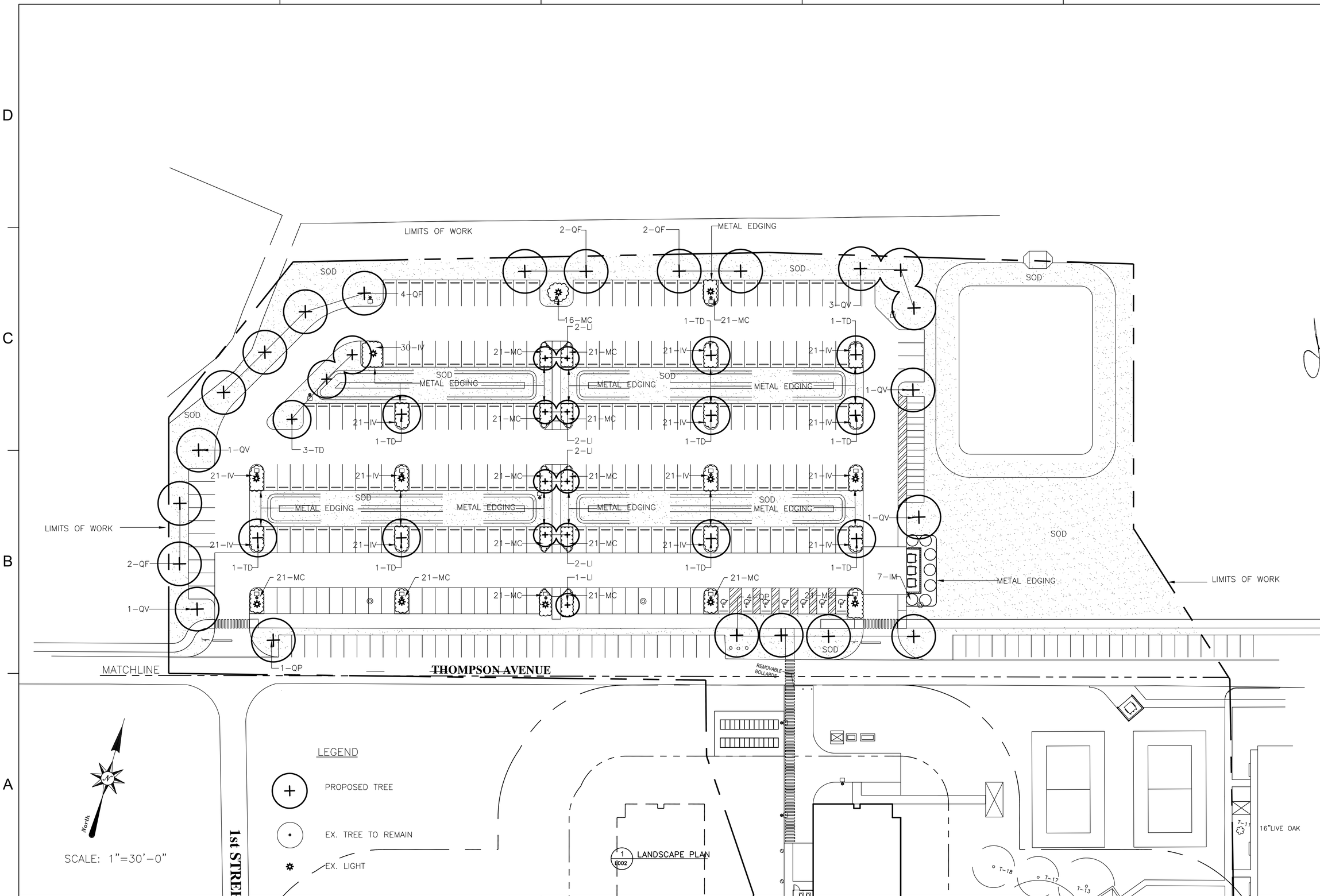

SYM	DESCRIPTION	DATE	APPR

NAVFAC

ANDERSON DRACE
JOINT VENTURE

REGISTERED LANDSCAPE ARCHITECT
JAMES E. HOWE
No. 0666
MAY 25, 2011
STATE OF FLORIDA
SEAL

EGH ARCHITECTS
A/E INFO

APPROVED

FOR COMMANDER NAVFAC
ACTIVITY

SATISFACTORY TO DATE JAN 17, 2012

DES	DRW	CHK

DEPARTMENT OF THE NAVY
NAVAL FACILITIES ENGINEERING COMMAND
IPT GULFCOAST
CORRY STATION

NAVAL FACILITIES ENGINEERING COMMAND SOUTHEAST
NAVAL AIR STATION JACKSONVILLE, FL
PENSACOLA, FLORIDA

BUILDING P-724 Corry "A" School BEQ
REVISED [2+0] MODULE DESIGN
LANDSCAPE PLAN

SCALE: AS INDICATED
EPROJECT NO.: 10-045
CONSTR. CONTR. NO. N69450-10-C-0755
NAVFAC DRAWING NO. 15050372
SHEET 27 OF 204
L002

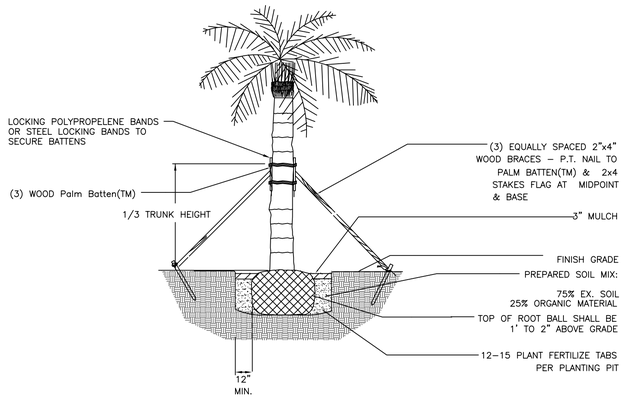

PALM PLANTING DETAIL

N.T.S.

PLANT LIST					
KEY	QTY	COMMON NAME	BOTANICAL NAME	SIZE	REMARKS
TREES					
AB	18	Red Maple	Acer Rubrum 'Florida Flame'	10'–12'	3" – 3 1/2" Cal.,Single trunk, 45 gal.
LI	23	Crape Myrtle	Lagerstromia indica 'Muskogee'	8'–10'	Multi trunk, 3 trunk min., tree form, 30 gal.
QF	10	Red Oak	Quercus Falcata	12'–14'	3" – 3 1/2" Cal.,Single trunk, 45 gal.
QP	7	Willow Oak	Quercus phellos	12'–14'	3" – 3 1/2" Cal.,Single trunk, 45 gal.
QV	7	Live Oak	Quercus Virginiana	12'–14'	3" – 3 1/2" Cal.,Single trunk, 45 gal.
SP	16	Cabbage Palm	Sabal Palmetto	15'–20' clear trunk	BR, Matched–slick
TD	12	Cypress	Taxodium distichum	10'–12'	2" – 2 1/2" Cal.,Single trunk, 30 gal.
SHRUBS					
IM	25	Mary Nell Holly	Ilex 'x' Mary Nell	5'–6'	30 gal.
IV	303	Dwarf Yaupon	Ilex 'vomitora 'Nana'	16" – 18"	3 Gal., Plant 3' o.c.
JC	384	Blue Pacific Juniper	Juniperus Conferta 'Blue Pacific'	6"X16" spread	3 Gal., Plant 3' o.c.
MC	408	Muhly Grass	Muhlenbergia Capillaris	18" – 24"	3 Gal., Plant 3' o.c.
GROUND COVER					
SOD		Common Bermuda	Cynodom Dactylon		well rooted, healthy sod

PLANT QUANTITIES ARE SHOWN IN THE PLANT LIST FOR CONVENIENCE ONLY. THE CONTRACTOR SHALL BE RESPONSIBLE FOR VERIFYING THESE QUANTITIES. IN THE EVENT THAT QUANTITY DISCREPANCIES OCCUR BETWEEN THE PLANS AND THE MATERIALS LIST, THE QUANTITIES INDICATED ON THE PLANS SHALL GOVERN.

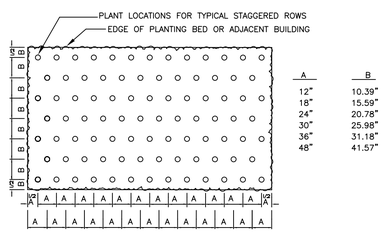

GROUND COVER SPACING PLAN

N.T.S.

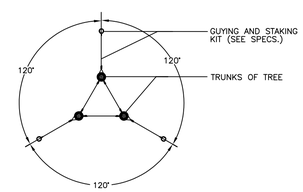

PLAN

N.T.S.

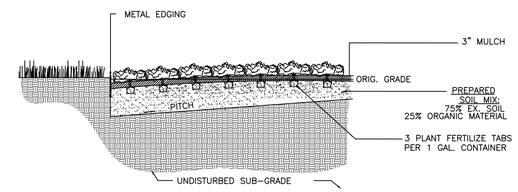

GROUND COVER DETAIL

N.T.S.

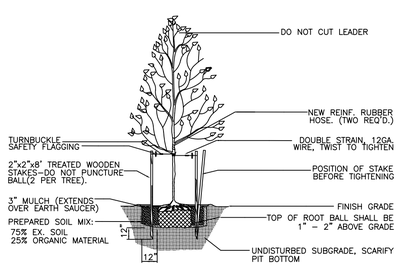

TREE PLANTING DETAIL

N.T.S.

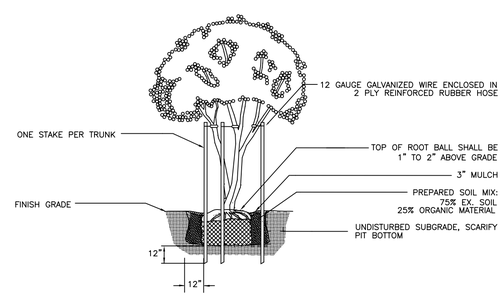

MULTIPLE TRUNK TREE PLANTING DETAIL

N.T.S.

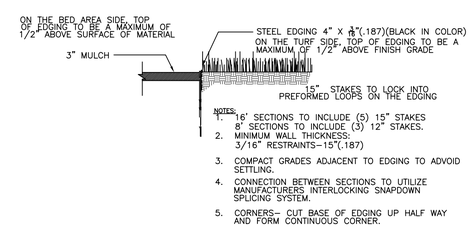

NOTES:

1. 16' SECTIONS TO INCLUDE (5) 15" STAKES 8' SECTIONS TO INCLUDE (3) 12" STAKES.
2. MINIMUM WALL THICKNESS: 3/16" RESTRAINTS–15"(.187)
3. COMPACT GRADES ADJACENT TO EDGING TO ADVOID SETTLING.
4. CONNECTION BETWEEN SECTIONS TO UTILIZE MANUFACTURERS INTERLOCKING SNAPDOWN SPLICING SYSTEM.
5. CORNERS– CUT BASE OF EDGING UP HALF WAY AND FORM CONTINUOUS CORNER.

METAL EDGING DETAIL

N.T.S.

1 / L003 LANDSCAPE DETAILS

SYM	DESCRIPTION	DATE	APPR

NAVFAC

ANDERSON DRACE JOINT VENTURE

REGISTERED LANDSCAPE ARCHITECT JAMES E. DRACE MAY 9TH 2011 STATE OF FLORIDA

SEAL

EGH ARCHITECTS

A/E INFO

APPROVED

FOR COMMANDER NAVFAC

ACTIVITY

SATISFACTORY TO DATE JAN 17, 2012

DES | DRW | CHK

DEPARTMENT OF THE NAVY
NAVAL FACILITIES ENGINEERING COMMAND
IPT GULFCOAST
CORRY STATION

NAVAL FACILITIES ENGINEERING COMMAND SOUTHEAST
NAVAL AIR STATION JACKSONVILLE, FL
PENSACOLA, FLORIDA

BUILDING P-724 Corry "A" School BEQ
REVISED [2+0] MODULE DESIGN

LANDSCAPE DETAILS

SCALE: AS INDICATED

EPROJECT NO.: 10-045

CONSTR. CONTR. NO. N69450-10-C-0755

NAVFAC DRAWING NO. 15050373

SHEET 28 OF 204

L003

VALVE # 16 | 1" — 66 GPM — VALVE SIZE

(C) ESP4M W/ 1 MODULES

1 1/4" PR 200 MAIN LINE

100DV VALVE

1812

5004 FC 4.0

5004 PC 3.0

1" METER

SCH 40 PVC SLEEVE–SIZE AS NOTED

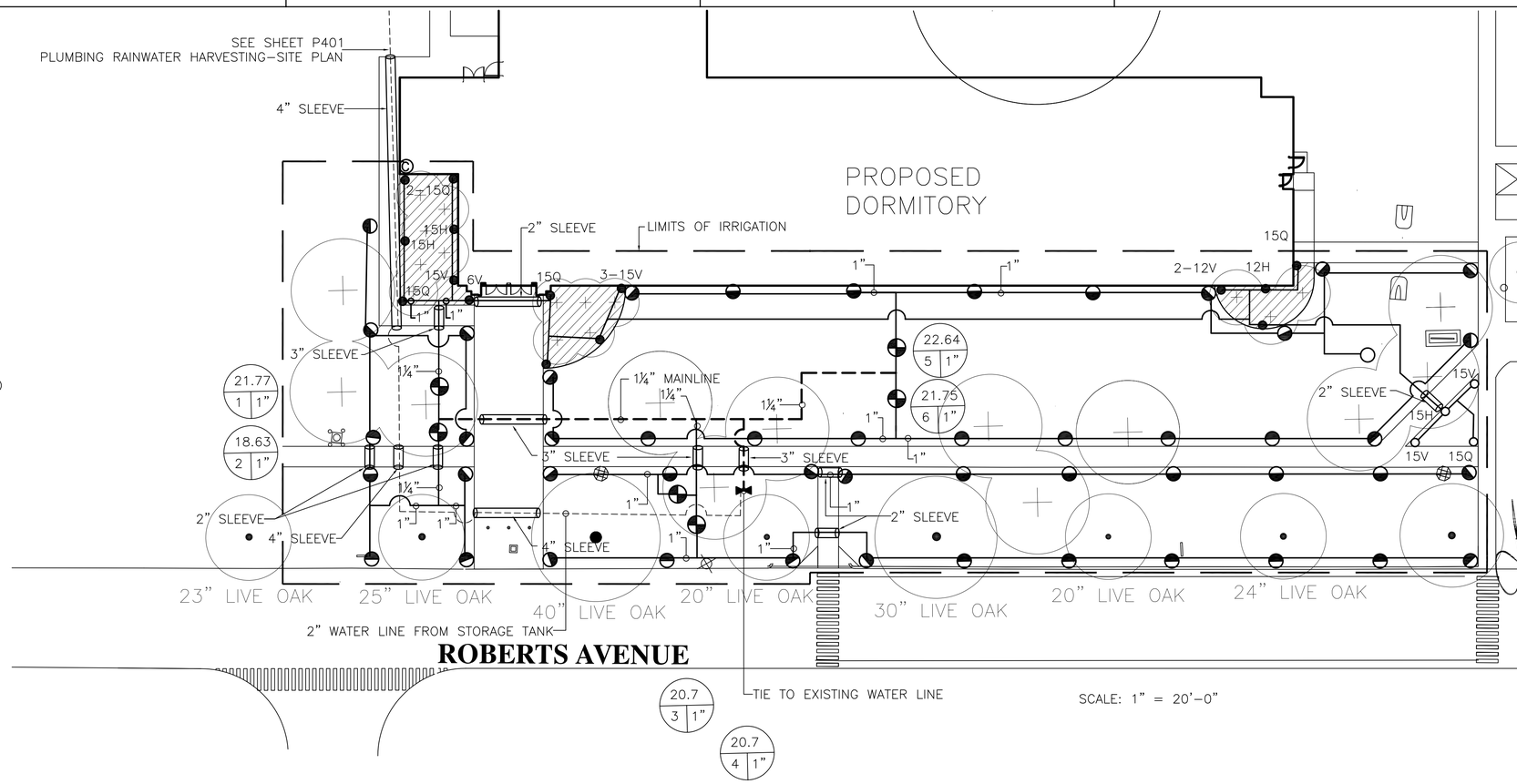

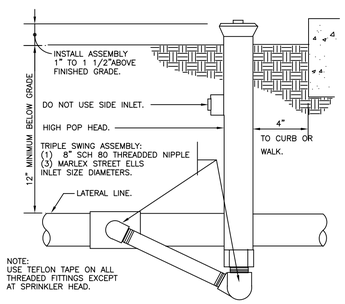

SHRUB SPRAY HIGHPOP MARLEX ASSEMBLY

N.T.S.

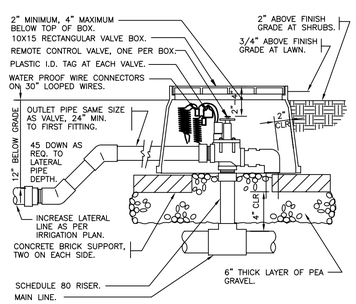

ELECTRIC REMOTE CONTROL VALVE

N.T.S.

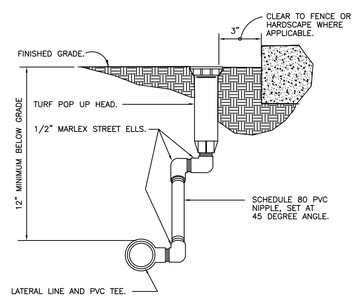

TURF SPRAY MARLEX ASSEMBLY

N.T.S.

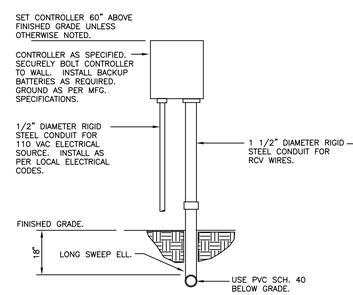

WALL MOUNT CONTROLLER

N.T.S.

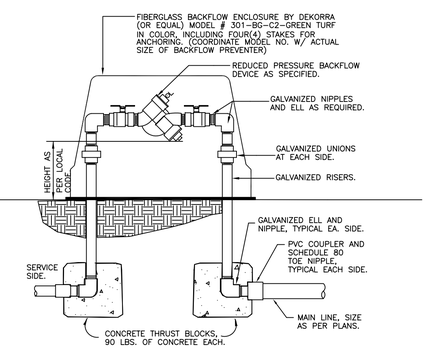

REDUCED PRESSURE BACKFLOW DEVICE

N.T.S.

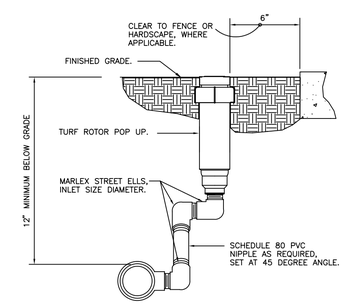

TURN ROTOR MARLEX ASSEMBLY

N.T.S.

1 / L004 IRRIGATION PLAN & DETAILS

SYM	DESCRIPTION	DATE	APPR

NAVFAC

ANDERSON DRACE JOINT VENTURE

REGISTERED LANDSCAPE ARCHITECT JAMES E. DRACE MAY 9TH 2011 FLORIDA SEAL

EGH ARCHITECTS A/E INFO

APPROVED

FOR COMMANDER NAVFAC

ACTIVITY

SATISFACTORY TO DATE JAN 17, 2012

DES | DRW | CHK

DEPARTMENT OF THE NAVY
NAVAL FACILITIES ENGINEERING COMMAND SOUTHEAST
PT GULFCOAST
CORRY STATION

NAVAL FACILITIES ENGINEERING COMMAND
NAVAL AIR STATION JACKSONVILLE, FL
PENSACOLA, FLORIDA

BUILDING P-724 Corry "A" School BEQ
REVISED [2+0] MODULE DESIGN

IRRIGATION PLAN & DETAILS

SCALE: AS INDICATED

EPROJECT NO.: 10-045

CONSTR. CONTR. NO. N69450-10-C-0755

NAVFAC DRAWING NO. 15050374

SHEET 29 OF 204

L004

GENERAL NOTES

1. THE STRUCTURAL PLANS AND SPECIFICATIONS COMPLY WITH THE APPLICABLE REQUIREMENTS OF THE INTERNATIONAL BUILDING CODE 2006 EDITION.

2. THE STRUCTURAL DOCUMENTS ARE TO BE USED IN CONJUNCTION WITH THE ARCHITECTURAL DOCUMENTS. USE THESE NOTES IN CONJUNCTION WITH THE SPECIFICATIONS. IF A CONFLICT EXISTS, THE MORE STRINGENT GOVERNS.

3. REVIEW ALL CONTRACT DOCUMENTS, DIMENSIONS AND SITE CONDITIONS AND COORDINATE WITH FIELD DIMENSIONS AND PROJECT SHOP DRAWINGS PRIOR TO CONSTRUCTION. REPORT ANY DISCREPANCIES IN WRITING TO ARCHITECT / ENGINEER. DO NOT CHANGE SIZE OR DIMENSIONS OF STRUCTURAL MEMBERS WITHOUT WRITTEN INSTRUCTIONS FROM THE STRUCTURAL ENGINEER OF RECORD.

4. PROTECT EXISTING FACILITIES, STRUCTURES AND UTILITY LINES FROM ALL DAMAGE. EACH CONTRACTOR SHALL PROTECT HIS WORK, ADJACENT PROPERTY AND THE PUBLIC. EACH CONTRACTOR IS SOLELY RESPONSIBLE FOR DAMAGE OR INJURY DUE TO HIS ACT OR NEGLECT.

5. SEE ARCHITECTURAL AND MECHANICAL DRAWINGS FOR SIZE AND LOCATION OF OPENINGS IN STRUCTURE NOT SHOWN ON STRUCTURAL DRAWINGS.

6. DETAILS LABELED "TYPICAL DETAILS" ON THE DRAWINGS APPLY TO ALL SITUATIONS THAT ARE THE SAME OR SIMILAR TO THOSE SPECIFICALLY DETAILED. SUCH DETAILS APPLY WHETHER OR NOT THEY ARE KEYED IN AT EACH LOCATION. QUESTIONS REGARDING APPLICABILITY OF TYPICAL DETAILS SHALL BE RESOLVED BY THE ARCHITECT / ENGINEER.

7. DESIGN LOADS AND CRITERIA:

A. ROOF LIVE LOAD	20 PSF
ROOF DEAD LOAD	20 PSF
PRIVATE ROOM & CORRIDOR ELEVATED FLOOR LIVE LOAD	40 PSF
ELEVATED FLOOR DEAD LOAD	60 PSF
PUBLIC ROOM & CORRIDOR LIVE LOAD	100 PSF
MECHANICAL LIVE LOAD	125 PSF
PARTITION DEAD LOAD	15 PSF

B. WIND CRITERIA (ASCE7-05)

-BASIC WIND SPEED	140 MPH
-EXPOSURE	C
-IMPORTANCE FACTOR	1.0
-ENCLOSED	

C. SEISMIC DESIGN

-Ss=10.0%=0.10	
-S1=5.0%=0.05	
-SITE SOIL CLASS TYPE D	
-IMPORTANCE FACTOR	1.0

8. THIS BUILDING IS DESIGNED TO RESIST PROGRESSIVE COLLAPSE USING THE TIE FORCE METHOD PER UFC 4-023-03, 27 JANUARY, 2010.

9. ALL WIND FORCES SHALL BE DETERMINED ACCORDING TO ASCE7-2005 FOR THE MINIMUM WIND CRITERIA STATED ABOVE, INCLUDE ALL APPROPRIATE SHAPE, HEIGHT, AND GUST FACTORS FOR THE MAIN WIND FORCE RESISTING SYSTEM. TO CALCULATE THE MAXIMUM NET ROOF UPLIFT FOR STEEL JOISTS, USE A DEAD LOAD OF 5 PSF. FOR ROOF ATTACHMENTS USE THE LOADS DIRECTLY FROM THE CLADDING DIAGRAM.

10. ALL WINDOWS, DOORS, SKYLIGHTS, ETC. AND THEIR ATTACHMENTS TO THE STRUCTURAL FRAME SHALL BE DESIGNED TO RESIST ALL IBC AND UFC 4-010-01 LOAD REQUIREMENTS INCLUDING BUT NOT LIMITED TO WIND LOADS, IMPACT RESISTANCE, AND BLAST RESISTANCE. ALL WINDOWS, DOORS, SKYLIGHTS, ETC. SHALL BE DESIGNED BY THEIR SYSTEMS ENGINEER AND PROVIDED AS A SYSTEM INCLUDING ANY REQUIRED INTERMEDIATE SUPPORT AND THEIR ATTACHMENTS TO THE MAIN STRUCTURAL FRAME.

SHOP DRAWINGS REQUIRING ENGINEERING INPUT BY SPECIALTY ENGINEER

1. SPECIALTY ENGINEER:
   A. DEFINITION – A REGISTERED PROFESSIONAL ENGINEER WHO SPECIALIZES IN AND WHO UNDERTAKES THE DESIGN OF STRUCTURAL COMPONENTS OR STRUCTURAL SYSTEMS INCLUDED IN A SPECIFIC SUBMITTAL PREPARED FOR THIS PROJECT.
   B. SHALL BE:
      1. AN EMPLOYEE OR OFFICER OF A FABRICATOR.
      2. AN EMPLOYEE OR OFFICER OF AN ENTITY SUPPLYING COMPONENTS TO A FABRICATOR.
      3. AN INDEPENDENT CONSULTANT RETAINED BY THE FABRICATOR OR HIS SUPPLIER.

2. THE FOLLOWING SYSTEMS AND COMPONENTS AS A MINIMUM REQUIRE FABRICATION AND ERECTION DRAWINGS WITH INPUT BY A SPECIALTY ENGINEER, BUT ARE NOT LIMITED TO: STEEL JOISTS, WINDOWS, ROOFING SYSTEMS, LOUVERS, DOORS, ANY EXTERIOR ANCILLARY STRUCTURES, AND PRE-ENGINEERED METAL TRUSS SYSTEM (INCLUDING PERIMETER & INTERNAL TIES).

3. THE SPECIALTY ENGINEER OR MANUFACTURER SHALL DESIGN, PROVIDE, AND INSTALL THEIR COMPONENTS AND THE COMPONENT CONNECTIONS TO THE PRIMARY STRUCTURE PER THE WIND CRITERIA STATED IN THESE NOTES OR THE CURRENT GOVERNING BUILDING CODES, WHICHEVER IS MORE STRINGENT.

4. SUBMITTALS SHALL CLEARLY IDENTIFY THE SPECIFIC PROJECT AND APPLICABLE CODES, LIST THE DESIGN CRITERIA, AND SHOW ALL DETAILS AND PLANS NECESSARY FOR PROPER FABRICATION AND INSTALLATION. CALCULATIONS AND SHOP DRAWINGS SHALL IDENTIFY SPECIFIC PRODUCT UTILIZED. GENERIC PRODUCTS WILL NOT BE ACCEPTED.

5. SHOP DRAWINGS AND CALCULATIONS MUST BE PREPARED UNDER THE DIRECT SUPERVISION AND CONTROL OF THE SPECIALTY ENGINEER.

6. SHOP DRAWINGS AND CALCULATIONS REQUIRE THE SEAL, DATE AND SIGNATURE OF THE SPECIALTY ENGINEER. COMPUTER PRINTOUTS ARE AN ACCEPTABLE SUBSTITUTE FOR MANUAL COMPUTATIONS PROVIDED THEY ARE ACCOMPANIED BY SUFFICIENT DESCRIPTIVE INFORMATION TO PERMIT THEIR PROPER EVALUATION. SUCH DESCRIPTIVE INFORMATION SHALL BEAR THE SEAL AND SIGNATURE OF THE SPECIALTY ENGINEER AS AN INDICATION THAT HE HAS ACCEPTED RESPONSIBILITY FOR THE RESULTS.

7. REVIEW BY THE STRUCTURAL ENGINEER OF SUBMITTALS IS LIMITED TO VERIFYING THE FOLLOWING:

   A. THAT THE SPECIALTY ENGINEER HAS UNDERSTOOD THE DESIGN INTENT AND HAS USED THE SPECIFIED STRUCTURAL CRITERIA. (NO DETAILED CHECK OF CALCULATIONS WILL BE MADE.)

   B. THAT THE CONFIGURATION SET FORTH IN THE STRUCTURAL SUBMITTALS IS CONSISTENT WITH THE CONTRACT DOCUMENTS. (NO DETAILED CHECK OF DIMENSIONS OR QUANTITIES WILL BE MADE.)

SHALLOW FOUNDATIONS

1. ALL FOUNDATIONS SHALL BE PREPARED ACCORDING TO THE PROJECT GEOTECHNICAL REPORT BY LARRY JACOBS AND ASSOCIATES, FILE #10-195, DATED SEPTEMBER 28, 2010.

2. FOUNDATION DESIGN IS BASED ON AN ALLOWABLE SOIL BEARING CAPACITY OF 2500 PSF FOR FOOTINGS PER THE GEOTECHNICAL REPORT. RECOMMENDATIONS IN THIS REPORT SHALL BE FOLLOWED.

3. IF SOIL IS DISTURBED DURING FOOTING EXCAVATION RECOMPACT TO REQUIRED DENSITY.

4. CENTER ALL FOOTINGS UNDER THEIR RESPECTIVE COLUMNS OR WALLS, U.N.O. ON PLANS.

5. DO NOT EXCAVATE FOR ANY PURPOSE WITHIN ONE FOOT OF THE ANGLE OF REPOSE OF ANY SOIL BEARING FOOTING OR FOUNDATION UNLESS SUCH FOOTING OR FOUNDATION IS FIRST PROPERLY PROTECTED AGAINST SETTLEMENT.

6. THE CONTRACTOR IS RESPONSIBLE FOR THE DISPOSAL OF ALL ACCUMULATED WATER FROM EXCAVATIONS AND DEWATERING OPERATIONS IN SUCH A WAY AS NOT TO CAUSE INCONVENIENCE TO THE WORK AND DAMAGE TO THE STRUCTURAL ELEMENTS.

SLABS ON GRADE, U.N.O.

1. PREPARE SUBGRADE AS PER THE RECOMMENDATIONS OUTLINED IN THE PROJECT GEOTECHNICAL REPORT.

2. FOR 4" THICK SLABS ON GRADE REINFORCE WITH 6x6-W4.0xW4.0 WELDED WIRE FABRIC CENTERED IN SLAB, U.N.O.

3. FOR 6" THICK SLABS ON GRADE REINFORCE WITH 4x4-W4.0xW4.0 WELDED WIRE FABRIC CENTERED IN SLAB, U.N.O.

4. CHAIR WIRE FABRIC DURING CONCRETE PLACEMENT TO INSURE PROPER POSITION IN SLAB.

5. USE 10 MIL. POLYETHYLENE SHEETING BETWEEN SOIL AND CONCRETE SLAB, U.N.O.

6. PROVIDE 6" CAPILLARY WATER BARRIER UNDER INTERIOR PORTIONS OF SLAB ON GRADE. CAPILLARY WATER BARRIER SHALL CONSIST OF WASHED, NARROWLY GRADED MIXTURE OF CRUSHED STONE, OR CRUSHED OR UNCRUSHED GRAVEL; ASTM D448, COARSE-AGGREGATE GRADING SIZE 57; WITH 100 PERCENT PASSING A 1 1/2" SIEVE AND 0 TO 5 PERCENT PASSING A NO. 8 SIEVE, OR NATURAL SAND WITH A MAXIMUM 10% PASSING A NO. 200 SIEVE.

REINFORCED CONCRETE

1. USE STRUCTURAL CONCRETE AND CONCRETING PRACTICES CONFORMING TO ACI-318 AND 301 AND PROPORTION CONCRETE IN ACCORDANCE WITH ACI-318 CH. 4 AND MEETING A MIN. ULTIMATE COMPRESSIVE STRENGTH IN 28 DAYS AS FOLLOWS:

   FOOTING. . . . . .4000 PSI
   SLABS ON GRADE (U.N.O.) .4000 PSI
   ELEVATED SLABS (U.N.O.) . .3500 PSI
   THICKENED SLABS . . . . . .4000 PSI
   ALL OTHER CONCRETE . . . .4000 PSI

   PROVIDE CURRENT (MAX. 1 YEAR OLD) STATISTICAL DATA FOR EACH CONCRETE MIX DESIGN SUBMITTED.

2. USE ASTM A-615 GR. 60 FOR ALL REINFORCING STEEL, CONFORM TO ACI-301, ACI-315, ACI-318, AND CRSI "MANUAL OF STANDARD PRACTICE". ALL REINFORCING SHALL BE ACCURATELY PLACED, RIGIDLY SUPPORTED AND FIRMLY TIED IN PLACE WITH BAR SUPPORTS AND SPACERS IN ACCORDANCE WITH THE ABOVE REQUIREMENTS. PROVIDE CLASS 'B' LAP SPLICE FOR CONTINUOUS BARS. USE THE FOLLOWING COVER:

	BOTTOM	TOP	SIDES
FOOTING	3"	2"	3"
SLABS ON GROUND	2"	1"	2"
BEAMS	1-1/2"	1-1/2"	1-1/2"
COLUMNS/PILASTERS	–	–	1-1/2"

3. USE PLAIN, COLD-DRAWN ELECTRICALLY-WELDED STEEL WIRE FABRIC CONFORMING TO ASTM A-185. SUPPLY IN FLAT SHEETS ONLY. LAP SPLICES SHALL BE MEASURED BETWEEN OUTERMOST CROSS WIRES OF EACH FABRIC SHEET AND SHALL BE NOT LESS THAN TWICE THE SPACING OF THE CROSS WIRES PLUS TWO (2) INCHES.

ADHESIVE ANCHORING SYSTEMS

1. USE AN EPOXY OR POLYESTER RESIN ADHESIVE SUCH AS HILTI HIT HY 150, HILTI HVA, SIKA SIKADUR 32 HI-MOD (FOR HORIZONTAL AND VERTICAL SURFACES), SIKADUR 31 HI-MOD GEL (FOR OVERHEAD), OR ACCEPTED ALTERNATE.

2. FOLLOW MANUFACTURER'S SPECIFICATIONS FOR USE AND INSTALLATION.

3. INSTALL AND MAINTAIN A MIN. EMBEDMENT IN ACCORDANCE WITH MANUFACTURER'S SPECIFICATIONS, OR AS SPECIFIED ON DRAWINGS.

4. DIAMETER OF HOLE SHALL BE AS RECOMMENDED BY MANUFACTURER FOR THE PARTICULAR PRODUCT SPECIFIED IN THE DRAWINGS.

5. UNLESS NOTED, ANCHOR SPACING AND ANCHOR EDGE DISTANCE SHALL BE ACCORDING TO THE MANUFACTURER'S MOST CURRENT PUBLICATION IN ORDER TO DEVELOP MAXIMUM WORKING LOADS.

6. DO NOT EXCEED MANUFACTURER'S MAX. RECOMMENDED TIGHTENING TORQUE.

7. ALL ANCHORS SHALL BE INSTALLED AS PER MANUFACTURER'S RECOMMENDATIONS AND UNDER MANUFACTURER'S SUPERVISION IN ORDER TO DEVELOP THE MOST CURRENT PUBLISHED WORKING LOADS.

8. ALL EXPOSED ANCHORING SHALL BE TESTED AFTER INSTALLATION AT CONTRACTOR'S EXPENSE. A MINIMUM OF 10% OF EACH DAY'S APPLICATIONS AND NO LESS THAN 2 SHALL BE TESTED BY APPLYING A TENSING LOAD OF 1000 POUNDS TO THE EMBEDDED ANCHOR. IF A TEST APPLICATION FAILS, ALL APPLICATIONS FOR THAT DAY SHALL BE TESTED. TESTING PROCEDURES AND RESULTS SHALL BE SUBMITTED AND APPROVED BY ENGINEER.

PRE-ENGINEERED TRUSS SYSTEM

1. ALL TRUSSES AND RAFTERS SHALL BE DESIGNED BY THE TRUSS SYSTEM ENGINEER. THE SYSTEM SHALL BE DESIGNED AND FABRICATED BY MANUFACTURER TO FUNCTION AS A SYSTEM INCLUDING ALL TEMPORARY AND PERMANENT BRACING REQUIRED AND SPECIFIED.

2. TRUSSES SHALL BE FABRICATED WITH STANDARD CAMBER, AND ERECTED AND BRACED IN ACCORDANCE WITH MANUFACTURER'S RECOMMENDATIONS.

3. TRUSS SYSTEM ENGINEER SHALL SUBMIT ERECTION AND SHOP DRAWINGS SHOWING LOCATIONS, BRIDGING, CONNECTIONS AND DETAILS, SPECIAL AND EXTENDED ENDS. ACCESSORIES REQUIRED FOR THE INSTALLATION OF TRUSS SYSTEM. THE SPECIALTY ENGINEER SHALL INCLUDE COMPONENT DETAILS AND LAYOUT DRAWINGS SHOWING DESIGN LOADING, MEMBER SIZES, BRACING, ANCHORAGE, CONNECTIONS, AND OTHER NECESSARY FABRICATION AND ERECTION INFORMATION.

4. TOP CHORDS SHALL BE MINIMUM 16GA MEMBERS OF THE SHAPE AND SIZE REQUIRED. TOP AND BOTTOM CHORDS SHALL BE OF THE CONFIGURATIONS INDICATED ON THE DRAWINGS. ARRANGEMENT OF WEB MEMBERS TO BE AT THE DISCRETION OF THE DESIGN ENGINEER. AT TRUSS JOINTS, CENTERLINES OF MEMBERS SHALL INTERSECT AT A COMMON POINT OR ECCENTRICITIES SHALL BE CONSIDERED IN THE DESIGN.

5. DIAGONAL BRIDGING SHALL BE DESIGNED FOR L/R LESS THAN OR EQUAL TO 200.

6. TRUSS BRIDGING SHALL NOT BE USED TO SUPPORT EQUIPMENT, PIPING, CONDUITS, DUCTWORK, ETC.

7. TRUSS ANCHORAGES, AS A RESULT OF ACTUAL TRUSS CALCULATIONS, TO SUPPORTS SHALL BE DESIGNED AND SPECIFIED BY THE TRUSS SYSTEM ENGINEER. ANCHORAGES AND BRACING SPECIFIED BY TRUSS SYSTEM ENGINEER MUST MEET THE REQUIREMENT FOR LATERAL CAPACITY PREVIOUSLY INDICATED IN THESE NOTES.

8. THE TRUSS SYSTEM ENGINEER SHALL DESIGN AND SPECIFY ALL TRUSS TO TRUSS CONNECTIONS.

9. JOINTS AND CONNECTIONS SHALL BE MADE WITH SCREWS OR BOLTS.

10. TRUSS SYSTEM ENGINEER SHALL PROVIDE CHORD MEMBERS OF SUFFICIENT MATERIAL THICKNESS TO ENSURE METAL DECK ATTACHMENTS CAN DEVELOP THE REQUIRED UPLIFT LOADS. TOP CHORD SHALL BE 16GA MINIMUM.

11. THE ROOF SYSTEM IS TO BE DESIGNED TO RESIST PROGRESSIVE COLLAPSE WITH TIE FORCES ACCORDING TO UFC 4-023-03 LATEST EDITION. ALL TIES SHOWN ARE FOR REFERENCE ONLY. FINAL TIE DESIGN IS TO BE DETERMINED BY ROOF SYSTEM ENGINEER.

12. ROOF TRUSS STEM SHALL RESIST THE TIE FORCES SPECIFIED:
    PERIMETER TIE FORCE =16.8K
    INTERNAL TIE FORCES =2.8K PER FOOT

COMPOSITE STEEL FLOOR NOTES

1. GALVANIZED COMPOSITE FLOOR DECK SHALL BE OF THE DEPTH, GAGE, AND THICKNESS SPECIFIED ON THE DRAWINGS AND SHALL CONFORM TO ASTM A653 SQ GRADE 33 (Fy=33,000 PSI). GALVANIZED COATING SHALL CONFORM TO ASTM A924 WITH COATING DESIGNATION G60.

2. THE COMPOSITE STEEL DECK SHOWN ON THE DRAWINGS IS THE MINIMUM REQUIRED FOR UNSHORED CONSTRUCTION FOR THE TYPICAL CONDITION OF TWO CONTINUOUS SPANS OR MORE UNLESS SHORING IS SPECIFICALLY NOTED. THE DECK SUPPLIER SHALL INCREASE THE GAGE THICKNESS OR SPECIFY SHORING, IF NECESSARY, FOR SINGLE SPAN CONDITIONS THAT CANNOT BE AVOIDED.

3. THE DECK GAGE AND DEPTH HAVE BEEN SELECTED BASED ON THE WET WEIGHT OF CONCRETE AND THE FINAL DESIGN LOADS ONLY. CONSTRUCTION MATERIALS MAY NOT BE PLACED ON THE BARE METAL DECK.

4. THE FINAL SLAB THICKNESS SHALL BE NO LESS THAN INDICATED ON THE PLANS AND THE SLAB SHALL BE FINISHED TO THE SPECIFIED THICKNESS. CONTRACTOR SHALL SUBMIT CONSTRUCTION JOINT LOCATIONS TO THE ENGINEER FOR REVIEW AND APPROVAL PRIOR TO CONCRETE PLACEMENT. CONTRACTOR SHALL PROVIDE ADDITIONAL CONCRETE THAT MAY BE REQUIRED TO COMPENSATE FOR THE DEFLECTION OF UNSHORED BEAMS AND DECK.

5. SEE DETAILS FOR ATTACHMENT OF DECK TO SUPPORTS AND FOR SIDE LAP CONNECTIONS BETWEEN SUPPORTS. PROVIDE DECK ACCESSORIES SUCH AS COLUMN CLOSURES, CELL CLOSURES, AND GIRDER FILLERS TO CONSTRUCT COMPLETE FLOOR DECK.

6. DECK SHALL BE FABRICATED SO THAT DECK RUNS CONTINUOUSLY OVER OPENINGS. THE OPENINGS IN THE DECK SHALL NOT BE CUT UNTIL THE OPENING IS NEEDED (PER OSHA).

7. THE CONTRACTOR SHALL COORDINATE ALL TRADE REQUIREMENTS AND CONFIRM THE SIZE AND LOCATION OF ALL OPENINGS. OPENINGS LARGER THAN 12", AND AS DETAILED, SHALL HAVE STEEL FRAMING SUPPORTING ALL EDGES. SEE TYPICAL FRAMING DETAILS.

8. STEEL MEMBERS (I.E. -EDGE ANGLES, PLATES, ETC.) SUPPORTING STEEL DECK AT THE PERIMETER OF THE BUILDING SHALL BE CONTINUOUS, BUTT WELD PIECES WHERE SPLICES OCCUR.

9. CONDUIT, PIPING, ETC. SHALL NOT BE EMBEDDED IN COMPOSITE SLAB CONSTRUCTION. MODIFICATION TO THE REFERENCED FIRE RATED DESIGN ASSEMBLIES FOR ELEVATED COMPOSITE SLABS WILL NOT BE ALLOWED. SUCH MODIFICATIONS INCLUDE, BUT ARE NOT LIMITED TO, EMBEDDED CONDUIT, PIPING, OR OTHER BUILDING ELEMENT OR SYSTEM NOT INDICATED IN THE REFERENCED ASSEMBLIES. REFER TO THE ARCHITECTURAL DRAWINGS FOR THE FIRE RATED DESIGN ASSEMBLIES USED ON THIS PROJECT.

SCHMIDT CONSULTING · GROUP, INC.
FLORIDA LICENSE · NUMBER 05371
40 S Palafox Pl, Ste 300 · Pensacola, FL 32502
P: 850-438-0050 · F: 850-432-8631
STUART SMITH P.E.
FLORIDA LICENSE NUMBER 49738
SCG project: 2010-152

SYM	DESCRIPTION	DATE	APPR

NAVFAC

ANDERSON DRACE JOINT VENTURE

STUART CHARLES SMITH LICENSE NO. 49738 STATE OF FLORIDA PROFESSIONAL ENGINEER SEAL

EGH ARCHITECTS eleyguildhardy.com A/E INFO

APPROVED

FOR COMMANDER NAVFAC

ACTIVITY

SATISFACTORY TO DATE JAN 17, 2012

DES SL DRW AJB CHK SCS

DEPARTMENT OF THE NAVY
NAVAL FACILITIES ENGINEERING COMMAND SOUTHEAST
IPT GULF COAST
NAVAL FACILITIES ENGINEERING COMMAND
NAVAL AIR STATION JACKSONVILLE, FL
CORRY STATION
PENSACOLA, FLORIDA
BUILDING P-724 Corry "A" School BEQ
REVISED [2+0] MODULE DESIGN
STRUCTURAL NOTES

SCALE: AS INDICATED
EPROJECT NO.: 15-045
CONSTR. CONTR. NO. N69450-10-C-0755
NAVFAC DRAWING NO. 15050375
SHEET 30 OF 204
S001

STRUCTURAL STEEL

1. ALL STEEL WORK (INCLUDING FABRICATION AND ERECTION) SHALL CONFORM TO THE AISC MANUAL OF STEEL CONSTRUCTION 9TH EDITION AND PROJECT SPECIFICATIONS, USE THE FOLLOWING:
   A. ROLLED SHAPES, ASTM A992, GRADE 50.
   B. PLATES BARS A36, U.N.O.
   C. COLD-FORMED STEEL TUBING: ASTM A500, GRADE B.
   D. HOT-FORMED STEEL TUBING: ASTM A501.
   E. STEEL PIPE: ASTM A53, TYPE E OR S, GRADE B.
2. USE STRUCTURAL STEEL THAT IS FULLY WELDABLE WITHIN GRADES AND FROM ANY GRADE TO ANY OTHER GRADE. WELD ALL SHOP CONNECTIONS, U.N.O.
3. ALL SHOP AND FIELD WELDING SHALL CONFORM TO THE STRUCTURAL WELDING CODE AWS D1.1, LATEST EDITION, PUBLISHED BY THE AMERICAN WELDING SOCIETY (AWS). USE ELECTRODES CONFORMING TO AWS D1.1, E70 SERIES, U.N.O. SHOW ALL SHOP WELDS ON THE FABRICATION DRAWINGS AND ALL FIELD WELDS ON THE ERECTION DRAWINGS.
4. ALL SHOP AND FIELD WELDERS, WELDING OPERATORS, AND TACKERS SHALL BE CERTIFIED ACCORDING TO AWS PROCEDURES FOR THE WELDING PROCESS AND WELDING POSITION USED.
5. ALL JOINT WELDING PROCEDURES TO BE USED SHALL BE PREPARED BY THE FABRICATOR OR CONTRACTOR AS WRITTEN PROCEDURE SPECIFICATIONS AND SUBMITTED TO THE ARCHITECT/ENGINEER FOR THEIR RECORD. ALL JOINT WELDING PROCEDURES SHALL BE QUALIFIED PRIOR TO USE ACCORDING TO AWS PROCEDURES.
6. A325 BOLTS:
   A. A325 BOLTS SHALL CONFORM TO ASTM A 325 TYPE 1, HIGH STRENGTH BOLTS FOR STRUCTURAL STEEL JOINTS. DO NOT USE TYPE 2 BOLTS.
   B. PROVIDE HARDENED WASHERS CONFORMING TO ASTM F 436. PLACE HARDENED WASHERS UNDER PART BEING TURNED.
   C. LOAD INDICATOR WASHERS SHALL BE USED ON ALL A325 BOLTS, UNLESS TENSION CONTROL BOLTS ARE USED.
   D. ALL BOLTS SHALL BE NEW AND DOMESTICALLY MANUFACTURED. DO NOT REUSE BOLTS. USE ONLY NON-GALVANIZED NUTS AND BOLTS THAT ARE CLEAN, RUST-FREE, AND WELL LUBRICATED. BOLTS AND NUTS SHALL BE WAX DIPPED BY THE BOLT SUPPLIER OR LUBRICATED WITH JOHNSON'S STICK WAX 140.
7. USE F1554 GR55 BOLTS FOR ANCHOR BOLTS OR WHEN SPECIFICALLY CALLED FOR ON THE DRAWINGS.
8. CUT, DRILL, OR PUNCH HOLES PERPENDICULAR TO METAL SURFACES. DO NOT FLAME CUT HOLES OR ENLARGE HOLES BY BURNING.
9. SPLICING OF STRUCTURAL STEEL MEMBERS IN THE FIELD OR IN THE SHOP IS PROHIBITED EXCEPT WHERE INCLUDED ON THE DRAWINGS.
10. PROVIDE TEMPORARY BRACING AS NECESSARY TO INSURE A STABLE STRUCTURE DURING CONSTRUCTION.
11. DO NOT REPRODUCE THE STRUCTURAL DRAWINGS FOR USE AS SHOP DRAWINGS.

POWDER ACTUATED FASTENERS

1. USE POWDER ACTUATED FASTENING SYSTEMS SUCH AS HILTI, RED HEAD, RAMSET, OR AN ACCEPTED. INSTALL IN ACCORDANCE WITH MANUFACTURER'S SPECIFICATIONS.
2. POWDER ACTUATED FASTENERS SHALL ONLY BE USED FOR PARTITION WALLS.
3. PROVIDE A MINIMUM ANCHOR SPACING AND EDGE DISTANCE AS RECOMMENDED BY MANUFACTURER.
4. ALLOWABLE WORKING LOADS SHALL NOT EXCEED MANUFACTURER'S RECOMMENDATIONS, BUT NOT MORE THAN ACCEPTED BY APPROVING AGENCY. NO INCREASE FOR WIND OR SEISMIC LOADS IS PERMITTED.
5. PROVIDE A MINIMUM OF TWO FASTENERS PER CONNECTION.

STEEL FLOOR DECK

1. USE 3 INCH DEEP, COMPOSITE STEEL DECK UNITS, FORMED OF 20 GAUGE STEEL SHEETS CONFORMING TO ASTM A-446, HAVING A MINIMUM YIELD POINT OF 33 KSI, WITH A PROTECTIVE COATING OF ZINC CONFORMING TO ASTM A-653 G90.
2. THE DECK SHALL BE CAPABLE OF SUPPORTING A UNIFORMLY DISTRIBUTED CONSTRUCTION LOAD OF 20 PSF AND TOTAL SUPERIMPOSED LOADS LISTED UNDER GENERAL NOTES.
3. MANUFACTURE THE DECK IN ACCORDANCE WITH THE "SPECIFICATIONS FOR DESIGN OF LIGHT-GAUGE COLD-FORMED STEEL STRUCTURAL MEMBERS", AND CONFORM TO THE STEEL DECK INSTITUTE'S RECOMMENDED SPECIFICATIONS.
4. ERECT AND ANCHOR DECK UNITS IN ACCORDANCE WITH THE MANUFACTURER'S SPECIFICATIONS AND ERECTION DRAWINGS. AS A MINIMUM, ATTACH DECK TO SUPPORTS WITH (2)-0.157"Ø HILTI X-U P.A.F.'S AT EACH SUPPORT, SUCH THAT AVERAGE ATTACHMENT SPACING DOES NOT EXCEED 12" O.C. ATTACH SIDE LAPS AT MAX. 12" O.C. WITH #10 SCREWS.
5. USE 3-1/4" INCH THICK LIGHT WEIGHT CONCRETE SLAB ABOVE TOP OF DECK. MINIMUM COMPRESSIVE STRENGTH OF CONCRETE IS 3500 PSI AT 28 DAYS.
6. REINFORCE SLAB WITH 6 X 6 – W1.4 X W1.4, W.W.F., TYP. U.N.O.

TYPICAL STEEL ROOF DECK

1. 1-1/2" DEEP, 22 GAGE, TYPE B GALVANIZED METAL ROOF DECK.
   A. Fy= 33 KSI
   B. I= 0.169 in^4/ft
   C. S= 0.186 in^3/ft
   D. GALVANIZING: G90
2. THE DECK SHALL BE CAPABLE OF SUPPORTING A UNIFORMLY DISTRIBUTED TOTAL SUPERIMPOSED GRAVITY LOAD OF 55 PSF AND WIND UPLIFT AND RECOMMENDED SPECIFICATIONS. SHEAR LOADS AS SPECIFIED ON THE DRAWINGS.
3. MANUFACTURE THE DECK IN ACCORDANCE WITH THE "SPECIFICATIONS FOR DESIGN OF LIGHT GAGE COLD-FORMED STEEL STRUCTURAL MEMBERS", AND CONFORM TO THE STEEL DECK INSTITUTE'S
4. CONNECT DECK TO THE PRIMARY STRUCTURE AS SPECIFIED ON THE DRAWINGS.
5. CEILING, DUCTS AND LIGHT FIXTURES MAY BE HUNG FROM DECK. DO NOT HANG ANY OTHER ITEMS FROM ROOF DECK. NO SINGLE CONCENTRATED LOAD SHALL EXCEED 60 POUNDS AND NO UNIFORM LOAD SHALL EXCEED 10 PSF.

STRUCTURAL ABBREVIATIONS

BAL.	BALANCE
BM	BEAM
BOT	BOTTOM
C.J.	CONTRACTION JOINT
COL.	COLUMN
CONC.	CONCRETE
CONT.	CONTINUOUS
EA	EACH
ENG	ENGINEERING
EQ.	EQUAL
ETC	AND OTHER THINGS
EW	EACH WAY
EXP.	EXPANSION
FEE	FINISH FLOOR ELEVATION
GA	GAUGE
GALV.	GALVANIZED
HDG	HOT DIPPED GALVANIZED
HORIZ	HORIZONTAL
HRS	HOURS
I.E.	THEREFORE
JT.	JOINT
KSI	KILO-POUNDS PER SQUARE
INCH LLV.	LONG LEG VERTICAL
L/R	LEFT OR RIGHT
LT	LIGHT
MIN.	MINIMUM
MPH	MILES PER HOUR
MTL.	MATERIAL
O.C.	ON CENTER
PROJ.	PROJECT
PSF	POUNDS PER SQUARE FOOT
PSI	POUNDS PER SQUARE INCH
REINF.	REINFORCEMENT
REQ'D	REQUIRED
t	THICKNESS
T&B	TOP AND BOTTOM
T.O.F.	TOP OF FOOTING
T.O.S.	TOP OF STEEL
TYP.	TYPICAL
U.NO.	UNLESS NOTED OTHERWISE
WP	WORK POINT
℄	CENTERLINE
⅊	PLATE
ø	DIAMETER
⊕	ELEVATION

LIGHT GAUGE GALVANIZED METAL STUDS

1. DESIGN SHALL BE IN ACCORDANCE WITH AISI "SPECIFICATION FOR THE DESIGN OF COLD FORMED STRUCTURAL MEMBERS" AND THE STANDARDS OF THE SSMA.
2. JOINTS AND CONNECTIONS SHALL BE MADE WITH SCREWS OR BOLTS.
3. ALL COLD-FORMED STEEL FRAMING, CONNECTORS SHALL RECEIVE A G-60 GALVANIZED COATING
4. 3 5/8" 18GA STUDS (362S162-43) SHALL HAVE THE FOLLOWING MINIMUM PROPERTIES:
   A. DEPTH = 3.625 in
   B. WIDTH = 1.625 in
   C. GAGE = 18
   D. AREA = 0.340 in^2
   E. Ix = 0.710 in^4
   F. Sx = 0.392 in^3
   G. Fy = 50 KSI
5. 3 5/8" 18GA TRACKS (362T200-43) SHALL HAVE THE FOLLOWING MINIMUM PROPERTIES:
   A. DEPTH = 3.625 in
   B. WIDTH = 2.0 in
   C. GAGE = 18
   D. AREA = 0.343 in^2
   E. Ix = 1.024 in^4
   F. Sx = 0.536 in^3
   G. Fy = 50 KSI
6. 6" 16GA STUDS (600S200-54) SHALL HAVE THE FOLLOWING MINIMUM PROPERTIES:
   A. DEPTH = 6 in
   B. WIDTH = 2 in
   C. GAGE = 16
   D. AREA = 0.613 in^2
   E. Ix = 3.319 in^4
   F. Sx = 1.002 in^3
   G. Fy = 50 KSI
7. 6" 16GA TRACKS (600T200-54) SHALL HAVE THE FOLLOWING MINIMUM PROPERTIES:
   A. DEPTH = 6 in
   B. WIDTH = 2.0 in
   C. GAGE = 16
   D. AREA = 0.565 in^2
   E. Ix = 2.641 in^4
   F. Sx = 0.717 in^3
   G. Fy = 50 KSI
8. 6" 14GA DEFLECTION TRACKS (600T200-68) SHALL HAVE THE FOLLOWING MINIMUM PROPERTIES:
   A. DEPTH = 6 in
   B. WIDTH = 2.0 in
   C. GAGE = 14
   D. AREA = 0.712 in^2
   E. Ix = 3.540 in^4
   F. Sx = 0.973 in^3
   G. Fy = 50 KSI

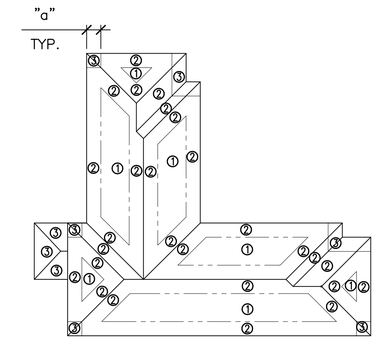

ROOF WIND PRESSURE DIAGRAM
NOTE: a=7'-0"

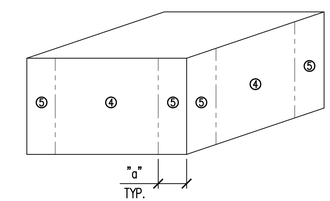

WALL WIND PRESSURE DIAGRAM
NOTE: a=7'-0"

MAIN WIND FORCE RESISTING SYSTEM PRESSURES

WIND VELOCITY (MPH)	ROOF ENCLOSED (PSF)	WALL ENCLOSED (PSF)
140	+/- 55	+/- 52

CLADDING PRESSURES

LOCATION	ZONE	PRESSURES (PSF)	
ROOF 10 SF	1	-52	33
	2	-90	
	3	-133	
ROOF 50 SF	1	-48	26
	2	-73	
	3	-113	
ROOF 100 SF	1	-48	23
	2	-66	
	3	-104	
WALL 10 SF	4	-62	57
	5	-76	
WALL 50 SF	4	-56	51
	5	-64	
WALL 500 SF	4	-47	42
	5	-47	

OVERHANG PRESSURES

LOCATION	ZONE	PRESSURES (PSF)
ROOF 10 SF	2	-115
	3	-152
ROOF 20 SF	2	-100
	3	-133
ROOF 100 SF	2	-97
	3	-97

SCHMIDT CONSULTING · GROUP, INC.
FLORIDA LICENSE · NUMBER 05371
40 S Palafox Pl, Ste 300 · Pensacola, FL 32502
P: 850-438-0050 · F: 850-432-8631
STUART SMITH P.E.
FLORIDA LICENSE NUMBER 49738
SCG project: 2010-152

SYM	DESCRIPTION	DATE	APPR.

NAVFAC

ANDERSON DRACE JOINT VENTURE

STUART CHARLES SMITH III, LICENSE NO. 49738, STATE OF FLORIDA, PROFESSIONAL ENGINEER, SEAL

EGH ARCHITECTS eleyguildhardy.com A/E INFO

APPROVED

FOR COMMANDER NAVFAC

ACTIVITY

SATISFACTORY TO DATE JAN 17, 2012

DES SL DRW AJB CHK SCS

DEPARTMENT OF THE NAVY
NAVAL FACILITIES ENGINEERING COMMAND SOUTHEAST
(FT GULF/COAST)
CORRY STATION
NAVAL FACILITIES ENGINEERING COMMAND
NAVAL AIR STATION JACKSONVILLE, FL
PENSACOLA, FLORIDA

BUILDING P-724 Corry "A" School BEQ
REVISED [2+0] MODULE DESIGN

STRUCTURAL NOTES

SCALE: AS INDICATED
EPROJECT NO.: 15045
CONSTR. CONTR. NO. N69450-10-C-0755
NAVFAC DRAWING NO. 15050376
SHEET 31 OF 204

S002

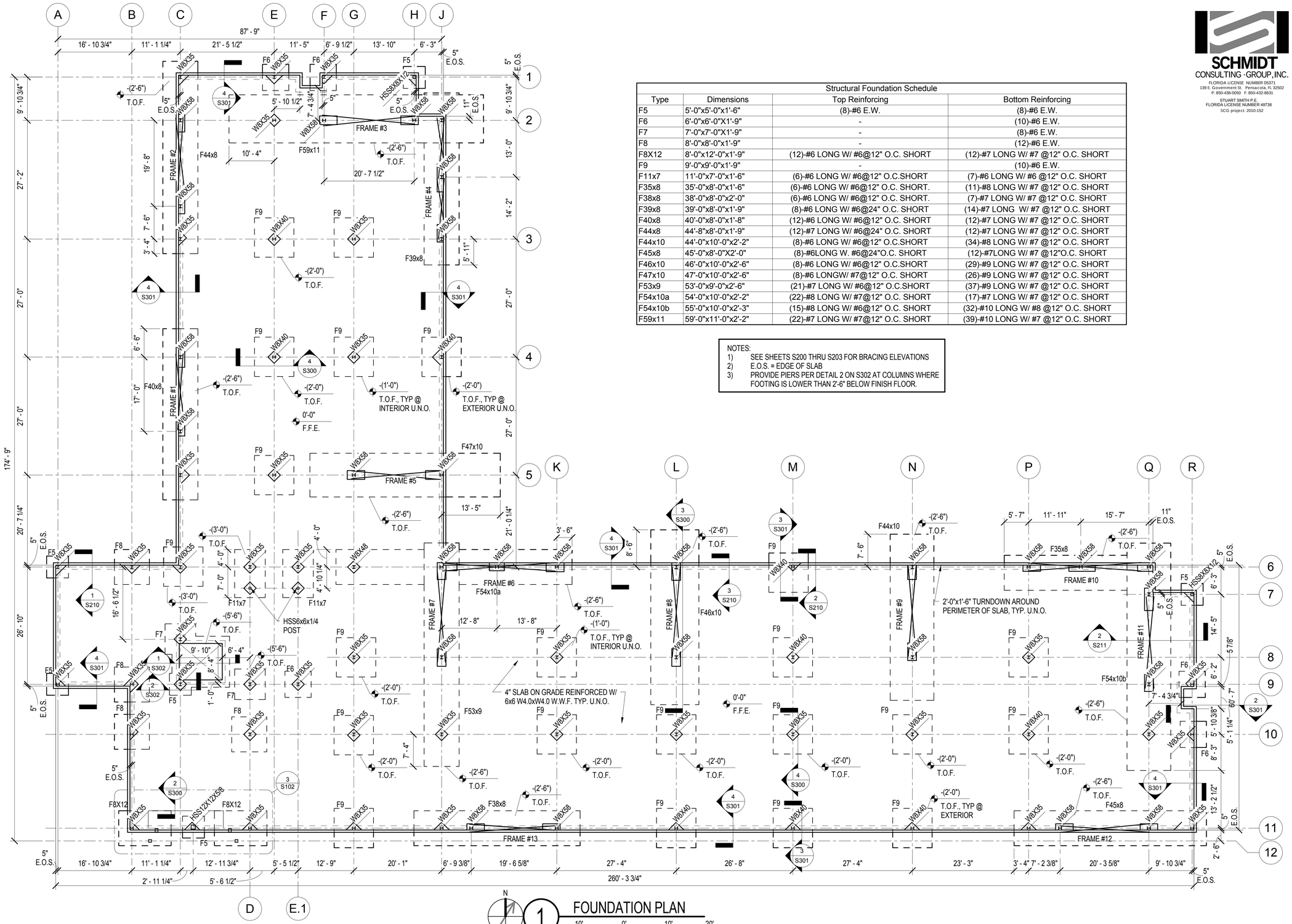

1 FOUNDATION PLAN

SCALE: 3/32"=1'-0"

Structural Foundation Schedule			
Type	Dimensions	Top Reinforcing	Bottom Reinforcing
F5	5'-0"x5'-0"x1'-6"	(8)-#6 E.W.	(8)-#6 E.W.
F6	6'-0"x6'-0"X1'-9"	-	(10)-#6 E.W.
F7	7'-0"x7'-0"X1'-9"	-	(8)-#6 E.W.
F8	8'-0"x8'-0"x1'-9"	-	(12)-#6 E.W.
F8X12	8'-0"x12'-0"x1'-9"	(12)-#6 LONG W/ #6@12" O.C. SHORT	(12)-#7 LONG W/ #7 @12" O.C. SHORT
F9	9'-0"x9'-0"x1'-9"	-	(10)-#6 E.W.
F11x7	11'-0"x7'-0"x1'-6"	(6)-#6 LONG W/ #6@12" O.C.SHORT	(7)-#6 LONG W/ #6 @12" O.C. SHORT
F35x8	35'-0"x8'-0"x1'-6"	(6)-#6 LONG W/ #6@12" O.C. SHORT.	(11)-#8 LONG W/ #7 @12" O.C. SHORT
F38x8	38'-0"x8'-0"x2'-0"	(6)-#6 LONG W/ #6@12" O.C. SHORT.	(7)-#7 LONG W/ #7 @12" O.C. SHORT
F39x8	39'-0"x8'-0"x1'-9"	(8)-#6 LONG W/ #6@24" O.C. SHORT	(14)-#7 LONG W/ #7 @12" O.C. SHORT
F40x8	40'-0"x8'-0"x1'-8"	(12)-#6 LONG W/ #6@12" O.C. SHORT	(12)-#7 LONG W/ #7 @12" O.C. SHORT
F44x8	44'-8"x8'-0"x1'-9"	(12)-#7 LONG W/ #6@24" O.C. SHORT	(12)-#7 LONG W/ #7 @12" O.C. SHORT
F44x10	44'-0"x10'-0"x2'-2"	(8)-#6 LONG W/ #6@12" O.C.SHORT	(34)-#8 LONG W/ #7 @12" O.C. SHORT
F45x8	45'-0"x8'-0"X2'-0"	(8)-#6LONG W. #6@24"O.C. SHORT	(12)-#7LONG W/ #7 @12"O.C. SHORT
F46x10	46'-0"x10'-0"x2'-6"	(8)-#6 LONG W/ #6@12" O.C.SHORT	(29)-#9 LONG W/ #7 @12" O.C. SHORT
F47x10	47'-0"x10'-0"x2'-6"	(8)-#6 LONGW/ #7@12" O.C. SHORT	(26)-#9 LONG W/ #7 @12" O.C. SHORT
F53x9	53'-0"x9'-0"x2'-6"	(21)-#7 LONG W/ #6@12" O.C.SHORT	(37)-#9 LONG W/ #7 @12" O.C. SHORT
F54x10a	54'-0"x10'-0"x2'-2"	(22)-#8 LONG W/ #7@12" O.C. SHORT	(17)-#7 LONG W/ #7 @12" O.C. SHORT
F54x10b	55'-0"x10'-0"x2'-3"	(15)-#8 LONG W/ #6@12" O.C. SHORT	(32)-#10 LONG W/ #8 @12" O.C. SHORT
F59x11	59'-0"x11'-0"x2'-2"	(22)-#7 LONG W/ #7@12" O.C. SHORT	(39)-#10 LONG W/ #7 @12" O.C. SHORT

NOTES:
1) SEE SHEETS S200 THRU S203 FOR BRACING ELEVATIONS
2) E.O.S. = EDGE OF SLAB
3) PROVIDE PIERS PER DETAIL 2 ON S302 AT COLUMNS WHERE FOOTING IS LOWER THAN 2'-6" BELOW FINISH FLOOR.

SCHMIDT CONSULTING GROUP, INC.
FLORIDA LICENSE NUMBER 05371
139 E. Government St. Pensacola, FL 32502
P: 850-438-0050 F: 850-432-8631
STUART SMITH P.E.
FLORIDA LICENSE NUMBER 49738
SCG project: 2010-152

SYM	DESCRIPTION	DATE	APPR

NAVFAC

ANDERSON DRACE JOINT VENTURE

STUART CHARLES SMITH P.E. LICENSE NO. 49738 STATE OF FLORIDA PROFESSIONAL ENGINEER SEAL

EGH ARCHITECTS eleyguildhardy.com A/E INFO

APPROVED

FOR COMMANDER NAVFAC

ACTIVITY

SATISFACTORY TO DATE JAN 17, 2012

DES SL DRW AJB CHK SCS

DEPARTMENT OF THE NAVY
NAVAL FACILITIES ENGINEERING COMMAND SOUTHEAST
IPT GULFCOAST

NAVAL FACILITIES ENGINEERING COMMAND
NAVAL AIR STATION JACKSONVILLE, FL

CORRY STATION
PENSACOLA, FLORIDA

BUILDING P-724 Corry "A" School BEQ
REVISED [2+0] MODULE DESIGN

FOUNDATION PLAN

SCALE: AS INDICATED
EPROJECT NO.: 10-045
CONSTR. CONTR. NO. N69450-10-C-0755
NAVFAC DRAWING NO. 15050377
SHEET 32 OF 204

S100

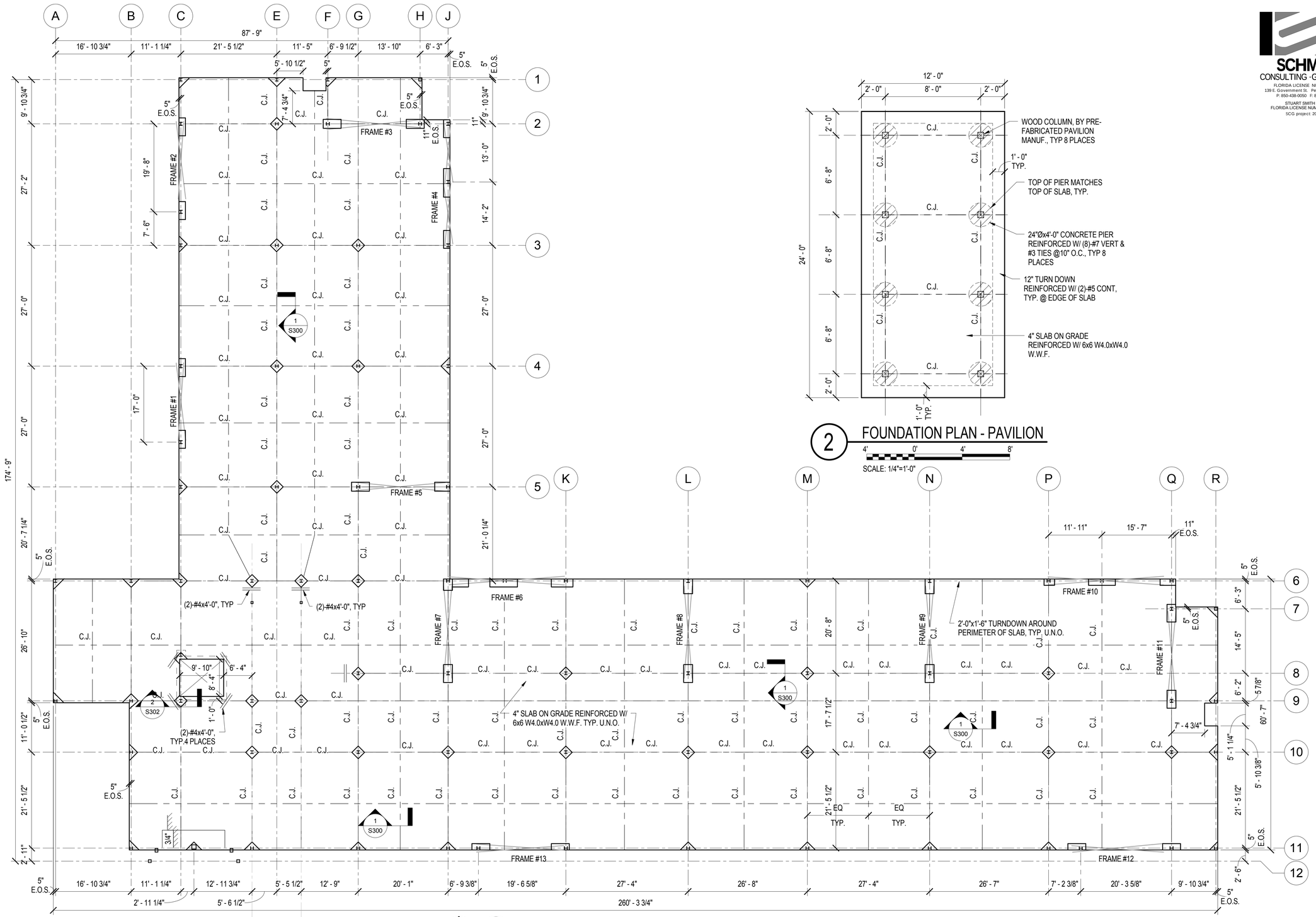

1 CONTRACTIOIN JOINT PLAN

10' 0' 10' 20'

SCALE: 3/32"=1'-0"

2 FOUNDATION PLAN - PAVILION

4' 0' 4' 8'

SCALE: 1/4"=1'-0"

SCHMIDT CONSULTING GROUP, INC.
FLORIDA LICENSE NUMBER 05371
139 E. Government St. Pensacola, FL 32502
P: 850-438-0050 F: 850-432-8631
STUART SMITH P.E.
FLORIDA LICENSE NUMBER 49738
SCG project: 2010-152

SYM	DESCRIPTION	DATE	APPR.

NAVFAC

ANDERSON DRACE JOINT VENTURE

STUART CHARLES SMITH P.E. LICENSE NO. 49738 STATE OF FLORIDA PROFESSIONAL ENGINEER

SEAL

EGH ARCHITECTS
eleyguildhardy.com
A/E INFO

APPROVED

FOR COMMANDER NAVFAC

ACTIVITY

SATISFACTORY TO DATE JAN 17, 2012

DES SL DRW AJB CHK SCS

DEPARTMENT OF THE NAVY
NAVAL FACILITIES ENGINEERING COMMAND SOUTHEAST
IPT GULFCOAST
CORRY STATION

NAVAL FACILITIES ENGINEERING COMMAND
NAVAL AIR STATION JACKSONVILLE, FL
PENSACOLA, FLORIDA

BUILDING P-724 Corry "A" School BEQ
REVISED [2+0] MODULE DESIGN

CONTRACTION JOINT PLAN

SCALE: AS INDICATED

EPROJECT NO.: 10-045

CONSTR. CONTR. NO.
N69450-10-C-0755

NAVFAC DRAWING NO.
15050378

SHEET 33 OF 204

S101

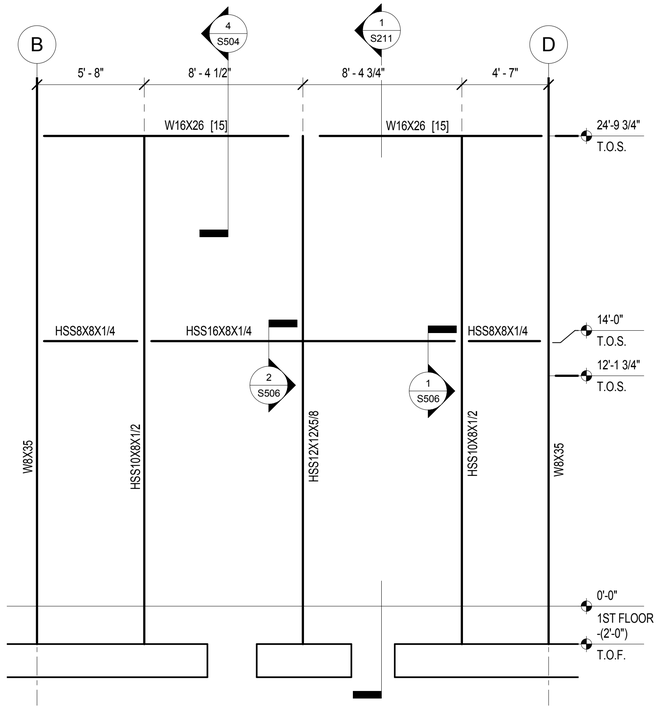

4 BLAST FRAME ELEVATION @ GRID 11

4' 0' 4' 8'

SCALE: 1/4"=1'-0"

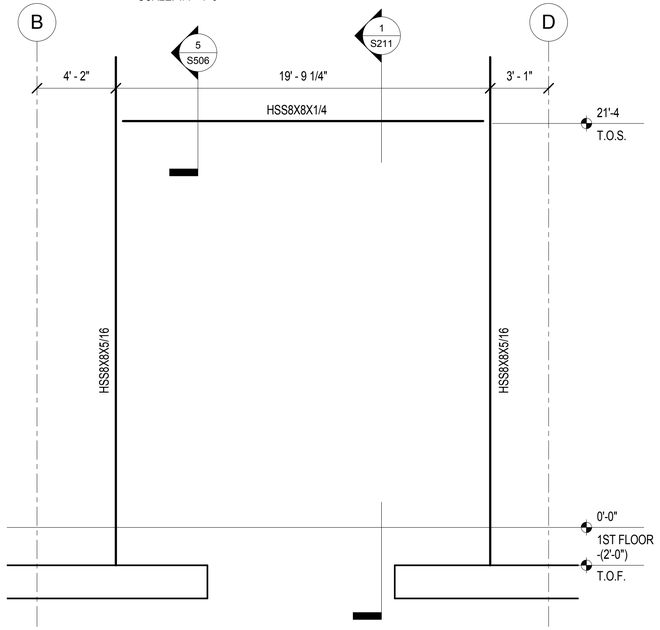

5 BLAST FRAME ELEVATION @ GRID 12

4' 0' 4' 8'

SCALE: 1/4"=1'-0"

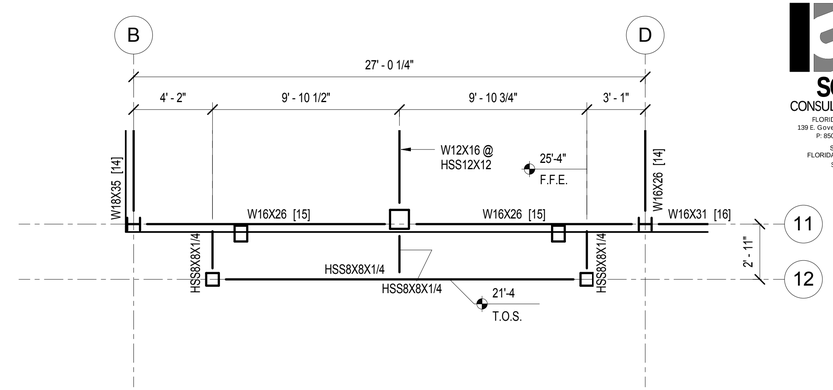

1 ENLARGED THIRD FLOOR PLAN

4' 0' 4' 8'

SCALE: 1/4"=1'-0"

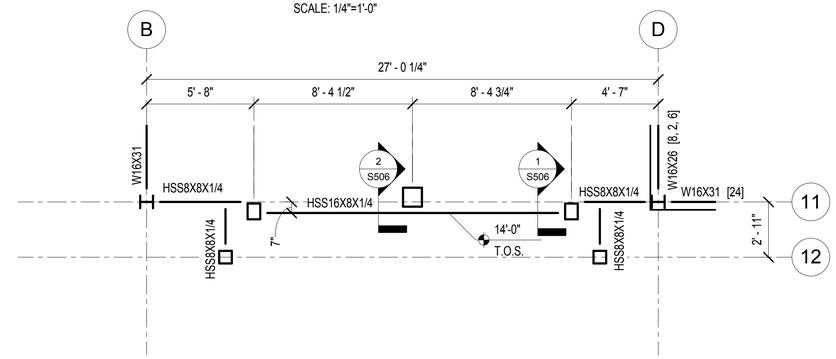

2 ENLARGED SECOND FLOOR PLAN

4' 0' 4' 8'

SCALE: 1/4"=1'-0"

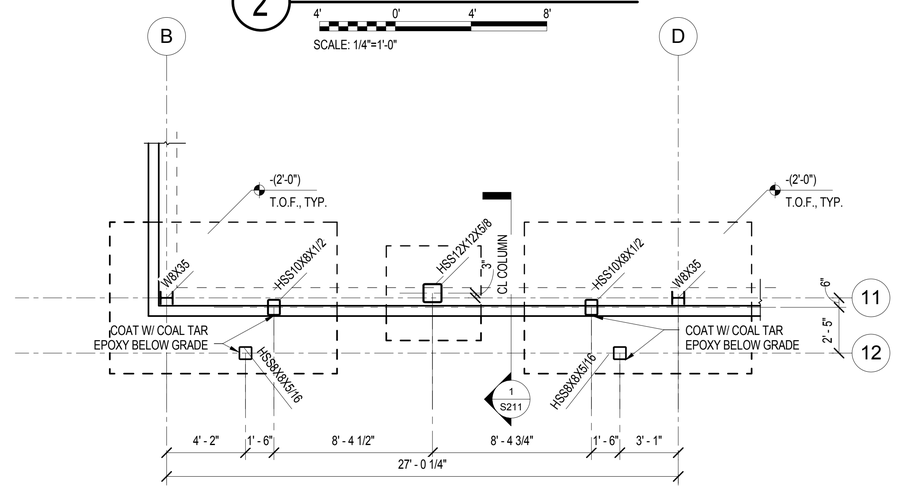

3 ENLARGED FOUNDATION PLAN

4' 0' 4' 8'

SCALE: 1/4"=1'-0"

SCHMIDT
CONSULTING · GROUP, INC.
FLORIDA LICENSE NUMBER 05371
139 E. Government St. Pensacola, FL 32502
P: 850-438-0050 F: 850-432-8631
STUART SMITH P.E.
FLORIDA LICENSE NUMBER 49738
SCG project: 2010-152

SYM	DESCRIPTION	DATE	APPR.

NAVFAC

ANDERSON DRACE
JOINT VENTURE

STUART CHARLES SMITH P.E. LICENSE NO. 49738 STATE OF FLORIDA PROFESSIONAL ENGINEER
SEAL

EGH ARCHITECTS
eleyguildhardy.com
A/E INFO

APPROVED

FOR COMMANDER NAVFAC
ACTIVITY

SATISFACTORY TO DATE JAN 17, 2012

DES SL	DRW AJB	CHK SCS

DEPARTMENT OF THE NAVY
NAVAL FACILITIES ENGINEERING COMMAND SOUTHEAST
IPT GULF/COAST
CORRY STATION

NAVAL FACILITIES ENGINEERING COMMAND
NAVAL AIR STATION JACKSONVILLE, FL
PENSACOLA, FLORIDA

BUILDING P-724 Corry "A" School BEQ
REVISED [2+0] MODULE DESIGN

ENLARGED FRONT ENTRY PLANS

SCALE: AS INDICATED
EPROJECT NO.: 10-045
CONSTR. CONTR. NO.
N69450-10-C-0755
NAVFAC DRAWING NO.
15050379
SHEET 34 OF 204

S102

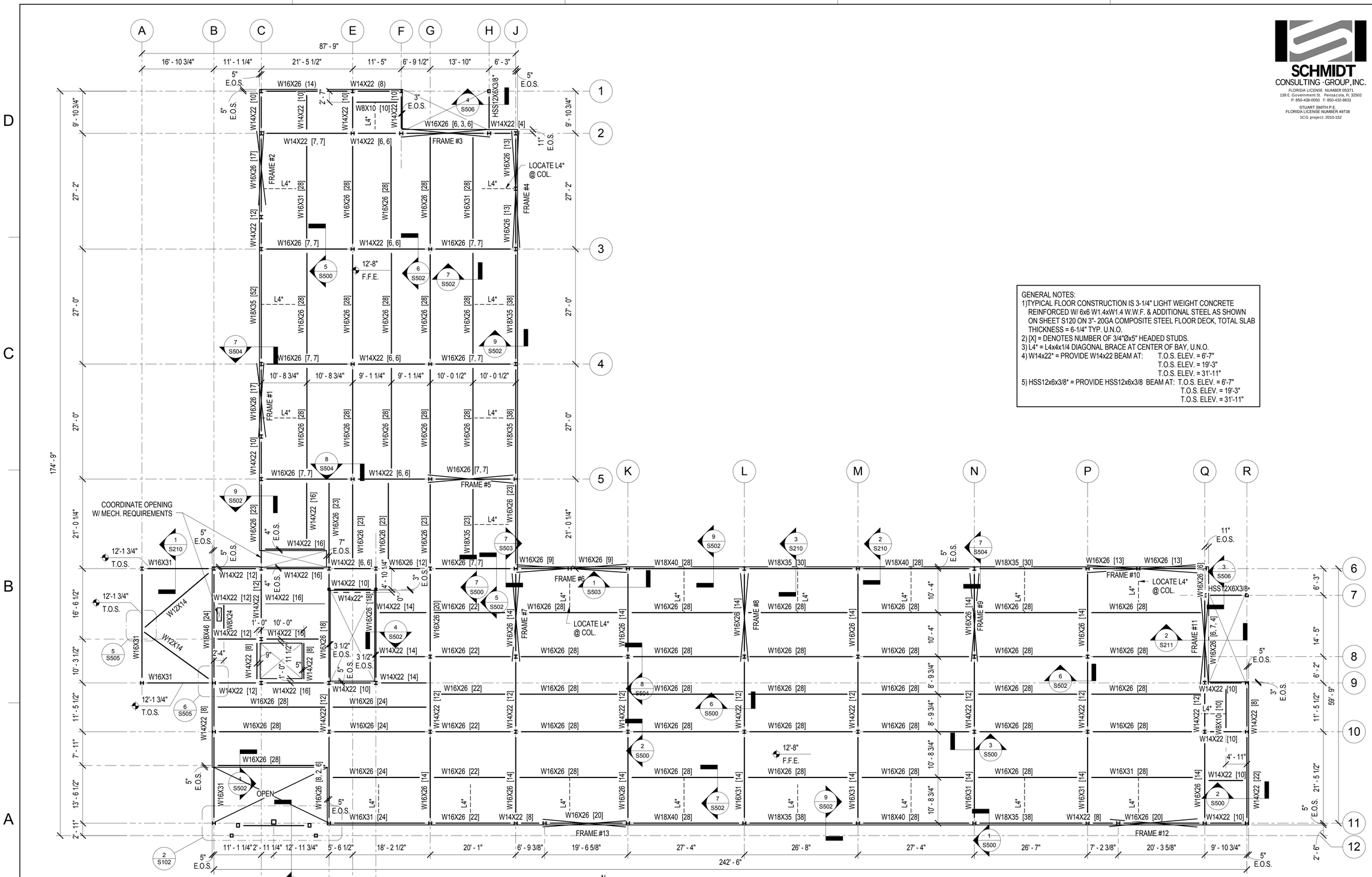

GENERAL NOTES:
1)TYPICAL FLOOR CONSTRUCTION IS 3-1/4" LIGHT WEIGHT CONCRETE REINFORCED W/ 6x6 W1.4xW1.4 W.W.F. & ADDITIONAL STEEL AS SHOWN ON SHEET S120 ON 3"- 20GA COMPOSITE STEEL FLOOR DECK, TOTAL SLAB THICKNESS = 6-1/4" TYP. U.N.O.
2) [X] = DENOTES NUMBER OF 3/4"Øx5" HEADED STUDS.
3) L4* = L4x4x1/4 DIAGONAL BRACE AT CENTER OF BAY, U.N.O.
4) W14x22* = PROVIDE W14x22 BEAM AT: T.O.S. ELEV. = 6'-7"
T.O.S. ELEV. = 19'-3"
T.O.S. ELEV. = 31'-11"
5) HSS12x6x3/8* = PROVIDE HSS12x6x3/8 BEAM AT: T.O.S. ELEV. = 6'-7"
T.O.S. ELEV. = 19'-3"
T.O.S. ELEV. = 31'-11"

1 2ND FLOOR FRAMING PLAN

SCALE: 3/32"=1'-0"

SCHMIDT CONSULTING GROUP, INC.
FLORIDA LICENSE NUMBER 05371
139 E. Government St. Pensacola, FL 32502
P: 850-438-0050 F: 850-432-8631
STUART SMITH P.E.
FLORIDA LICENSE NUMBER 49738
SCG project: 2010-152

SYM	DESCRIPTION	DATE	APPR

NAVFAC

ANDERSON DRACE JOINT VENTURE

STUART CHARLES SMITH P.E. LICENSE NO. 49738 STATE OF FLORIDA PROFESSIONAL ENGINEER
SEAL

EGH ARCHITECTS
eleyguildhardy.com
A/E INFO

APPROVED

FOR COMMANDER NAVFAC

ACTIVITY

SATISFACTORY TO DATE JAN 17, 2012

DES SL	DRW AJB	CHK SCS

DEPARTMENT OF THE NAVY
NAVAL FACILITIES ENGINEERING COMMAND SOUTHEAST
PT GULF/COAST
CORRY STATION

NAVAL FACILITIES ENGINEERING COMMAND
NAVAL AIR STATION JACKSONVILLE FL
PENSACOLA, FLORIDA

BUILDING P-724 Corry "A" School BEQ
REVISED [2+0] MODULE DESIGN

2ND FLOOR FRAMING PLAN

SCALE: AS INDICATED
EPROJECT NO.: 10-045
CONSTR. CONTR. NO. N69450-10-C-0755
NAVFAC DRAWING NO. 15050380
SHEET 35 OF 204

S110

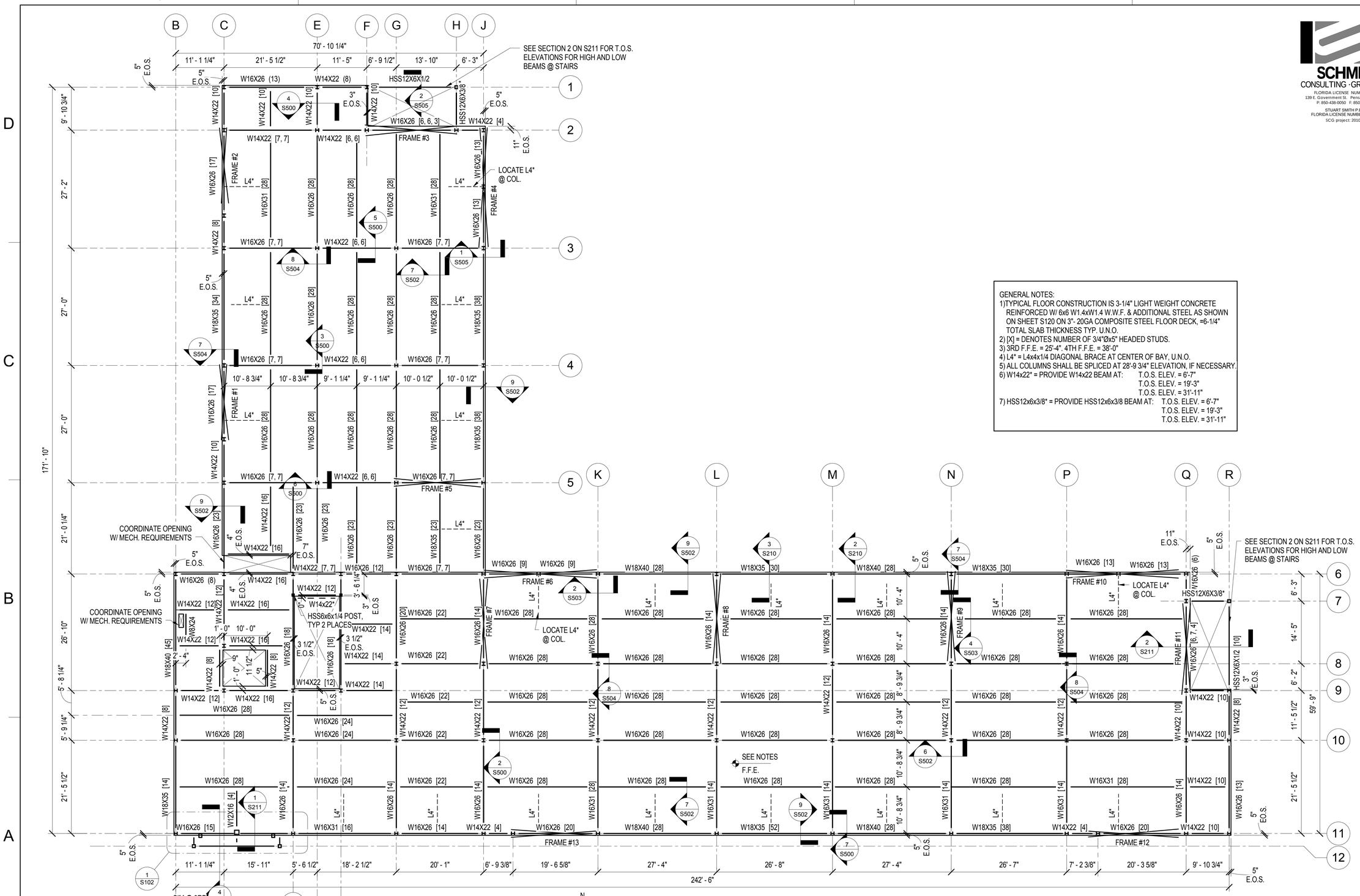

GENERAL NOTES:

1) TYPICAL FLOOR CONSTRUCTION IS 3-1/4" LIGHT WEIGHT CONCRETE REINFORCED W/ 6x6 W1.4xW1.4 W.W.F. & ADDITIONAL STEEL AS SHOWN ON SHEET S120 ON 3"- 20GA COMPOSITE STEEL FLOOR DECK, =6-1/4" TOTAL SLAB THICKNESS TYP. U.N.O.
2) [X] = DENOTES NUMBER OF 3/4"Øx5" HEADED STUDS.
3) 3RD F.F.E. = 25'-4". 4TH F.F.E. = 38'-0"
4) L4* = L4x4x1/4 DIAGONAL BRACE AT CENTER OF BAY, U.N.O.
5) ALL COLUMNS SHALL BE SPLICED AT 28'-9 3/4" ELEVATION, IF NECESSARY.
6) W14x22* = PROVIDE W14x22 BEAM AT: T.O.S. ELEV. = 6'-7"
T.O.S. ELEV. = 19'-3"
T.O.S. ELEV. = 31'-11"
7) HSS12x6x3/8* = PROVIDE HSS12x6x3/8 BEAM AT: T.O.S. ELEV. = 6'-7"
T.O.S. ELEV. = 19'-3"
T.O.S. ELEV. = 31'-11"

1 3RD& 4TH FLOOR FRAMING PLAN

SCALE: 3/32"=1'-0"

SCHMIDT CONSULTING GROUP, INC.
FLORIDA LICENSE NUMBER 05371
139 E. Government St. Pensacola, FL 32502
P: 850-438-0050 F: 850-432-8631
STUART SMITH P.E.
FLORIDA LICENSE NUMBER 49738
SCG project: 2010-152

SYM	DESCRIPTION	DATE	APPR

NAVFAC

ANDERSON DRACE JOINT VENTURE

STUART CHARLES SMITH LICENSE NO. 49738 STATE OF FLORIDA PROFESSIONAL ENGINEER SEAL

EGH ARCHITECTS eleyguildhardy.com A/E INFO

APPROVED

FOR COMMANDER NAVFAC

ACTIVITY

SATISFACTORY TO DATE JAN 17, 2012

DES	SL	DRW	AJB	CHK	SCS

DEPARTMENT OF THE NAVY
NAVAL FACILITIES ENGINEERING COMMAND SOUTHEAST
IPT GULF COAST
CORRY STATION

NAVAL FACILITIES ENGINEERING COMMAND
NAVAL AIR STATION JACKSONVILLE, FL
PENSACOLA, FLORIDA

BUILDING P-724 Corry "A" School BEQ
REVISED [2+0] MODULE DESIGN

3RD & 4TH FLOOR FRAMING PLAN

SCALE: AS INDICATED

EPROJECT NO.: 10-045

CONSTR. CONTR. NO. N69450-10-C-0755

NAVFAC DRAWING NO. 15050381

SHEET 36 OF 204

S111

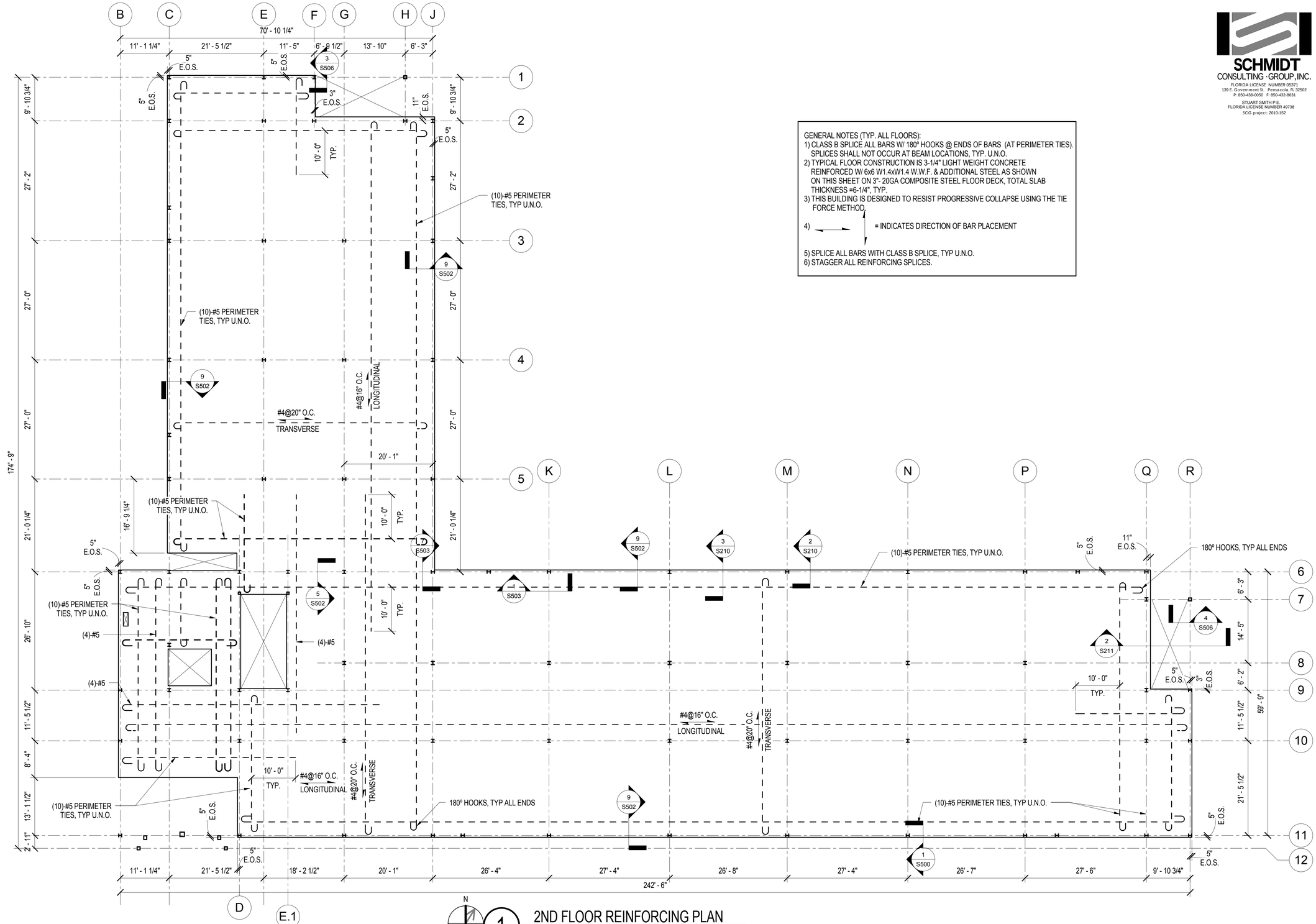

1 2ND FLOOR REINFORCING PLAN

SCALE: 3/32"=1'-0"

GENERAL NOTES (TYP. ALL FLOORS):

1) CLASS B SPLICE ALL BARS W/ 180° HOOKS @ ENDS OF BARS (AT PERIMETER TIES). SPLICES SHALL NOT OCCUR AT BEAM LOCATIONS, TYP. U.N.O.
2) TYPICAL FLOOR CONSTRUCTION IS 3-1/4" LIGHT WEIGHT CONCRETE REINFORCED W/ 6x6 W1.4xW1.4 W.W.F. & ADDITIONAL STEEL AS SHOWN ON THIS SHEET ON 3"- 20GA COMPOSITE STEEL FLOOR DECK, TOTAL SLAB THICKNESS =6-1/4", TYP.
3) THIS BUILDING IS DESIGNED TO RESIST PROGRESSIVE COLLAPSE USING THE TIE FORCE METHOD.
4) = INDICATES DIRECTION OF BAR PLACEMENT
5) SPLICE ALL BARS WITH CLASS B SPLICE, TYP U.N.O.
6) STAGGER ALL REINFORCING SPLICES.

SCHMIDT CONSULTING GROUP, INC.
FLORIDA LICENSE NUMBER 05371
139 E. Government St. Pensacola, FL 32502
P: 850-438-0050 F: 850-432-8631
STUART SMITH P.E.
FLORIDA LICENSE NUMBER 49738
SCG project: 2010-152

SYM	DESCRIPTION	DATE	APPR

NAVFAC

ANDERSON DRACE JOINT VENTURE

STUART CHARLES SMITH P.E. LICENSE NO. 49738 STATE OF FLORIDA PROFESSIONAL ENGINEER SEAL

EGH ARCHITECTS eleyguildhardy.com A/E INFO

APPROVED

FOR COMMANDER NAVFAC

ACTIVITY

SATISFACTORY TO DATE JAN 17, 2012

DES	SL	DRW	AJB	CHK	SCS

DEPARTMENT OF THE NAVY
NAVAL FACILITIES ENGINEERING COMMAND
PT GULF/COAST
CORRY STATION

NAVAL FACILITIES ENGINEERING COMMAND SOUTHEAST
NAVAL AIR STATION JACKSONVILLE, FL

PENSACOLA, FLORIDA

BUILDING P-724 Corry "A" School BEQ
REVISED [2+0] MODULE DESIGN

2ND FLOOR REINFORCING

SCALE: AS INDICATED

EPROJECT NO.: 10-045

CONSTR. CONTR. NO. N69450-10-C-0755

NAVFAC DRAWING NO. 15050382

SHEET 37 OF 204

S120

GENERAL NOTES (TYP. ALL FLOORS):
1) CLASS B SPLICE ALL BARS W/ 180° HOOKS @ ENDS OF BARS (AT PERIMETER TIES). SPLICES SHALL NOT OCCUR AT BEAM LOCATIONS, TYP. U.N.O.
2) TYPICAL FLOOR CONSTRUCTION IS 3-1/4" LIGHT WEIGHT CONCRETE REINFORCED W/ 6x6 W1.4xW1.4 W.W.F. & ADDITIONAL STEEL AS SHOWN ON THIS SHEET ON 3"- 20GA COMPOSITE STEEL FLOOR DECK, TOTAL SLAB THICKNESS =6-1/4", TYP.
3) THIS BUILDING IS DESIGNED TO RESIST PROGRESSIVE COLLAPSE USING THE TIE FORCE METHOD.
4) = INDICATES DIRECTION OF BAR PLACEMENT

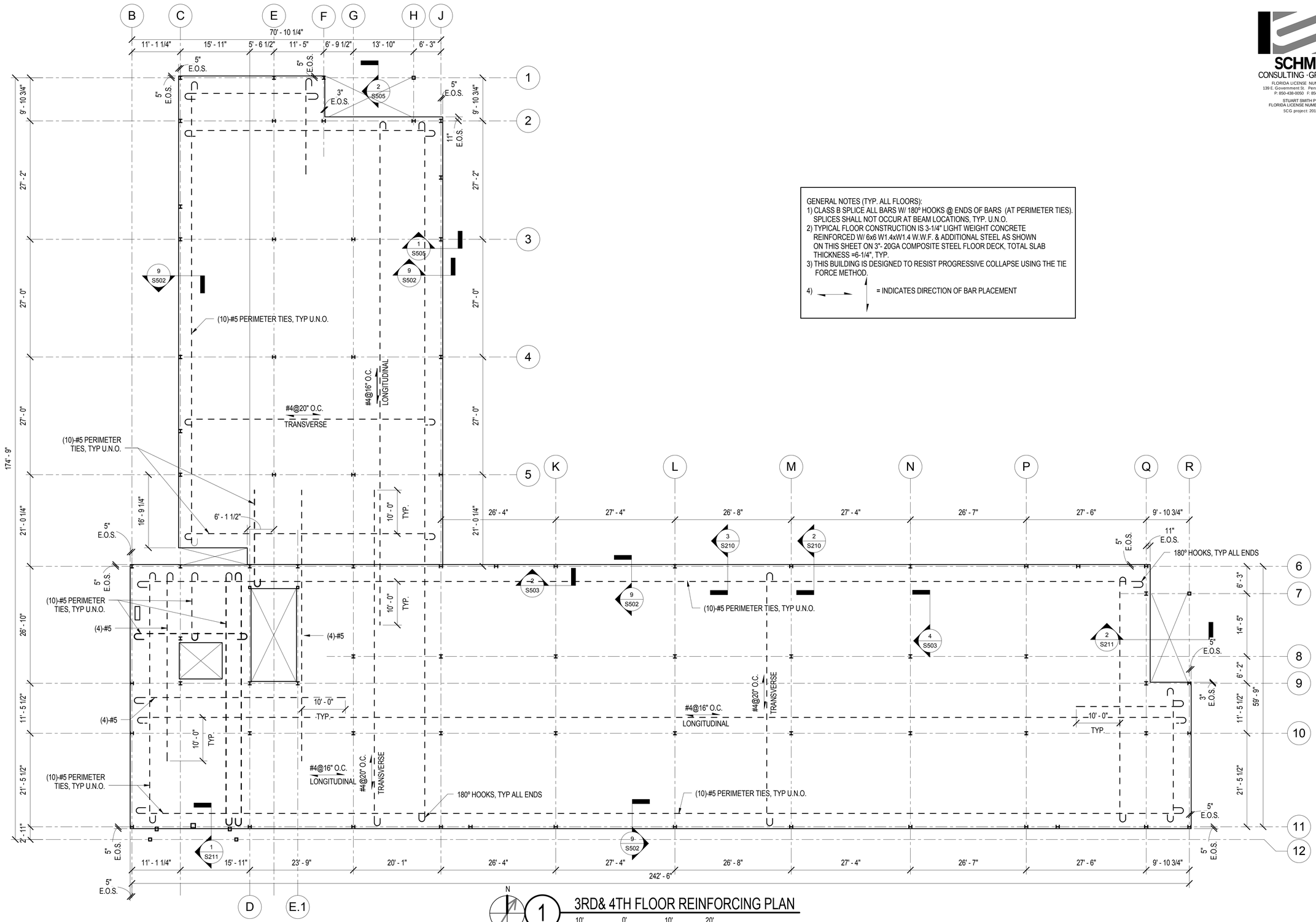

1 3RD& 4TH FLOOR REINFORCING PLAN

SCALE: 3/32"=1'-0"

SCHMIDT CONSULTING GROUP, INC.
FLORIDA LICENSE NUMBER 05371
139 E. Government St. Pensacola, FL 32502
P: 850-438-0050 F: 850-432-8631
STUART SMITH P.E.
FLORIDA LICENSE NUMBER 49738
SCG project: 2010-152

SYM	DESCRIPTION	DATE	APPR.

NAVFAC

ANDERSON DRACE JOINT VENTURE

STUART CHARLES SMITH P.E. LICENSE NO. 49738 STATE OF FLORIDA PROFESSIONAL ENGINEER

SEAL

EGH ARCHITECTS eleyguildhardy.com

A/E INFO

APPROVED

FOR COMMANDER NAVFAC

ACTIVITY

SATISFACTORY TO DATE JAN 17, 2012

DES SL | DRW AJB | CHK SCS

DEPARTMENT OF THE NAVY
NAVAL FACILITIES ENGINEERING COMMAND
IPT GULF COAST
CORRY STATION

NAVAL FACILITIES ENGINEERING COMMAND SOUTHEAST
NAVAL AIR STATION JACKSONVILLE, FL
PENSACOLA, FLORIDA

BUILDING P-724 Corry "A" School BEQ
REVISED [2+0] MODULE DESIGN

3RD & 4TH FLOOR REINFORCING PLAN

SCALE: AS INDICATED
EPROJECT NO.: 10-045
CONSTR. CONTR. NO. N69450-10-C-0755
NAVFAC DRAWING NO. 15050383
SHEET 38 OF 204

S121

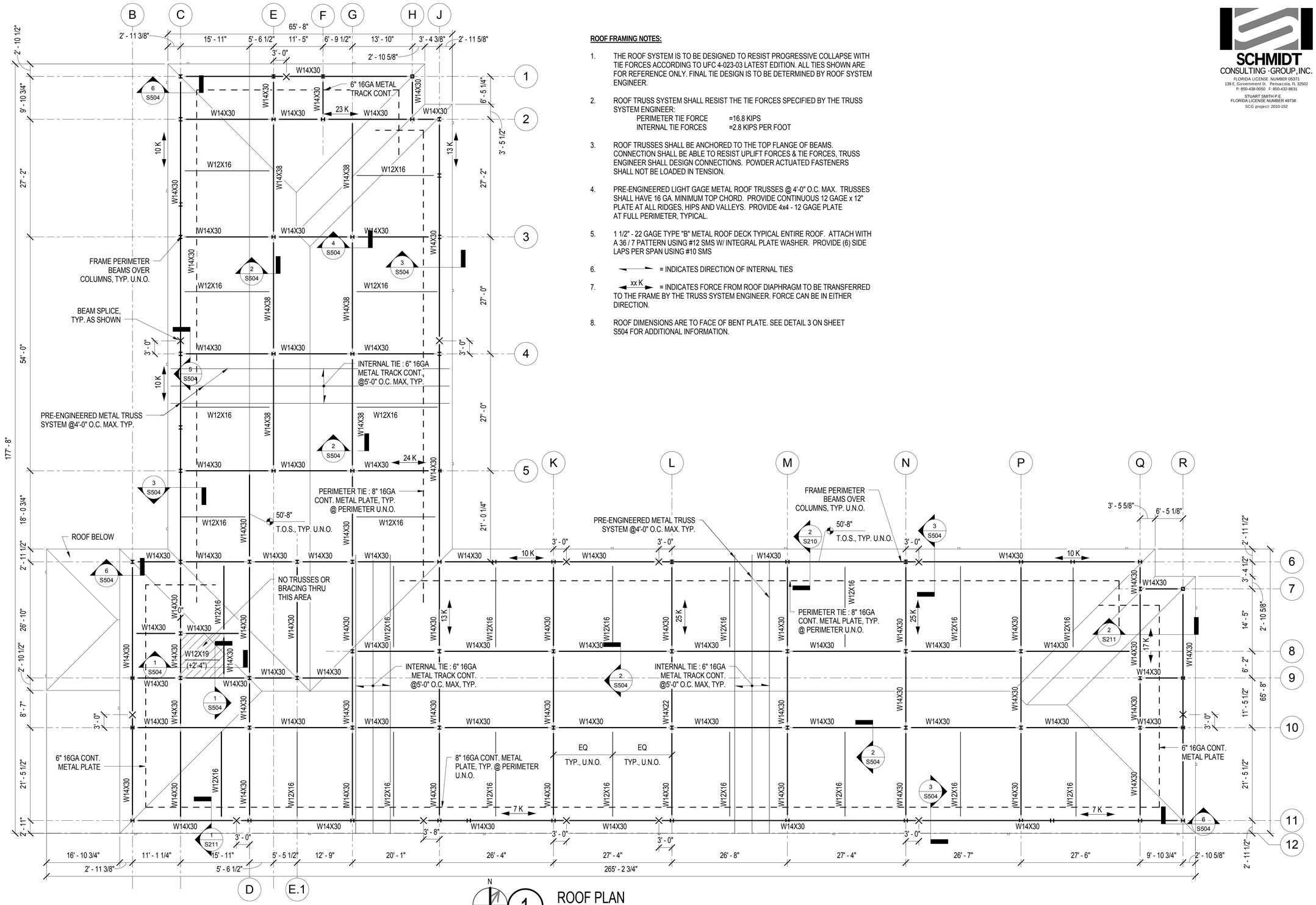

1 ROOF PLAN

SCALE: 3/32"=1'-0"

ROOF FRAMING NOTES:

1. THE ROOF SYSTEM IS TO BE DESIGNED TO RESIST PROGRESSIVE COLLAPSE WITH TIE FORCES ACCORDING TO UFC 4-023-03 LATEST EDITION. ALL TIES SHOWN ARE FOR REFERENCE ONLY. FINAL TIE DESIGN IS TO BE DETERMINED BY ROOF SYSTEM ENGINEER.
2. ROOF TRUSS SYSTEM SHALL RESIST THE TIE FORCES SPECIFIED BY THE TRUSS SYSTEM ENGINEER:
   PERIMETER TIE FORCE =16.8 KIPS
   INTERNAL TIE FORCES =2.8 KIPS PER FOOT
3. ROOF TRUSSES SHALL BE ANCHORED TO THE TOP FLANGE OF BEAMS. CONNECTION SHALL BE ABLE TO RESIST UPLIFT FORCES & TIE FORCES, TRUSS ENGINEER SHALL DESIGN CONNECTIONS. POWDER ACTUATED FASTENERS SHALL NOT BE LOADED IN TENSION.
4. PRE-ENGINEERED LIGHT GAGE METAL ROOF TRUSSES @ 4'-0" O.C. MAX. TRUSSES SHALL HAVE 16 GA. MINIMUM TOP CHORD. PROVIDE CONTINUOUS 12 GAGE x 12" PLATE AT ALL RIDGES, HIPS AND VALLEYS. PROVIDE 4x4 - 12 GAGE PLATE AT FULL PERIMETER, TYPICAL.
5. 1 1/2" - 22 GAGE TYPE "B" METAL ROOF DECK TYPICAL ENTIRE ROOF. ATTACH WITH A 36 / 7 PATTERN USING #12 SMS W/ INTEGRAL PLATE WASHER. PROVIDE (6) SIDE LAPS PER SPAN USING #10 SMS
6. ←→ = INDICATES DIRECTION OF INTERNAL TIES
7. ◄ xx K ► = INDICATES FORCE FROM ROOF DIAPHRAGM TO BE TRANSFERRED TO THE FRAME BY THE TRUSS SYSTEM ENGINEER. FORCE CAN BE IN EITHER DIRECTION.
8. ROOF DIMENSIONS ARE TO FACE OF BENT PLATE. SEE DETAIL 3 ON SHEET S504 FOR ADDITIONAL INFORMATION.

SCHMIDT CONSULTING GROUP, INC.
FLORIDA LICENSE NUMBER 05371
139 E. Government St. Pensacola, FL 32502
P: 850-438-0050 F: 850-432-8631
STUART SMITH P.E.
FLORIDA LICENSE NUMBER 49738
SCG project: 2010-152

SYM	DESCRIPTION	DATE	APPR

NAVFAC

ANDERSON DRACE JOINT VENTURE

STUART CHARLES SMITH P.E. LICENSE NO. 49738 STATE OF FLORIDA PROFESSIONAL ENGINEER

SEAL

EGH ARCHITECTS
eleyguildhardy.com
A/E INFO

APPROVED

FOR COMMANDER NAVFAC

ACTIVITY

SATISFACTORY TO DATE JAN 17, 2012

DES	DRW	CHK
SL	AJB	SCS

DEPARTMENT OF THE NAVY
NAVAL FACILITIES ENGINEERING COMMAND SOUTHEAST
PT GULF/COAST
CORRY STATION

NAVAL FACILITIES ENGINEERING COMMAND
NAVAL AIR STATION JACKSONVILLE, FL
PENSACOLA, FLORIDA

BUILDING P-724 Corry "A" School BEQ
REVISED [2+0] MODULE DESIGN

ROOF FRAMING PLAN

SCALE: AS INDICATED
EPROJECT NO.: 10-045
CONSTR. CONTR. NO. N69450-10-C-0755
NAVFAC DRAWING NO. 15050384
SHEET 39 OF 204

S130

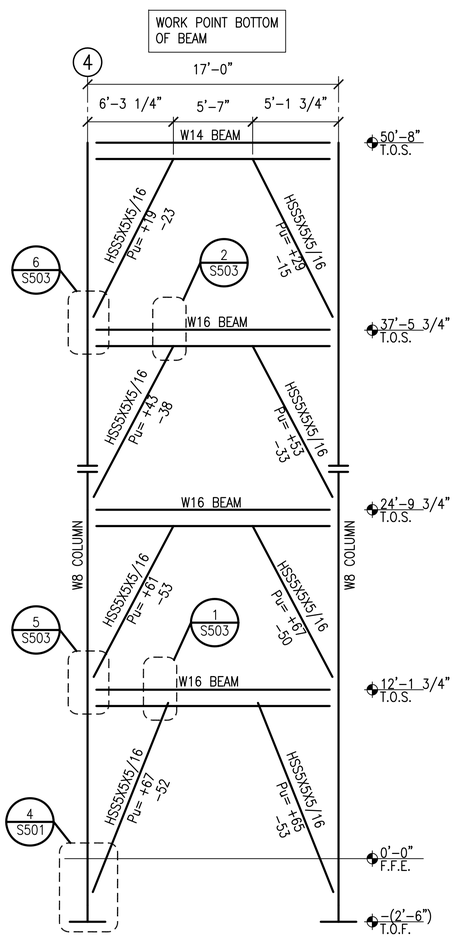

1 FRAME #1
NOT TO SCALE

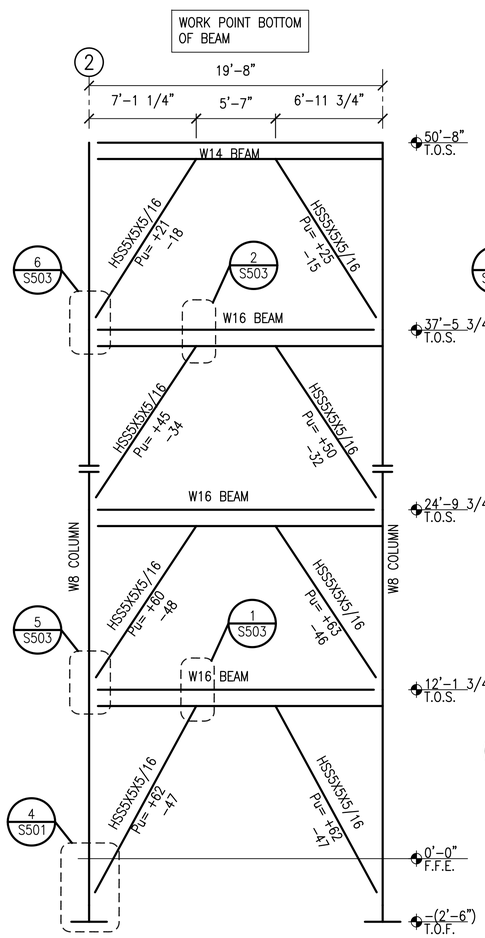

2 FRAME #2
NOT TO SCALE

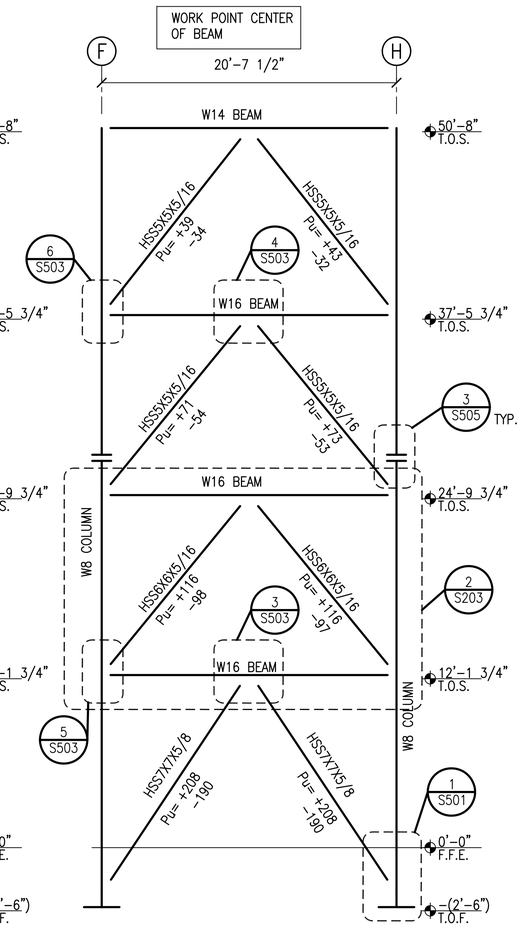

3 FRAME #3
NOT TO SCALE

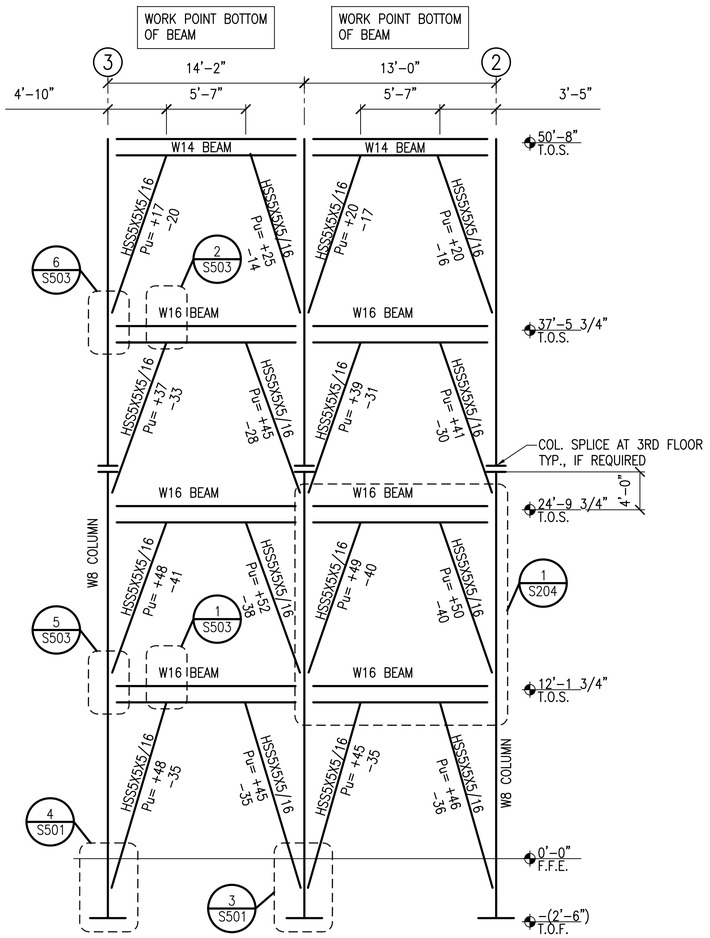

4 FRAME #4
NOT TO SCALE

SCHMIDT CONSULTING · GROUP, INC.
FLORIDA LICENSE - NUMBER 05371
40 S Palafox Pl, Ste 300 - Pensacola, FL 32502
P: 850-435-0050 - F: 850-432-8631
STUART SMITH P.E.
FLORIDA LICENSE NUMBER 49738
SCG project: 2010-152

SYM	DESCRIPTION	DATE	APPR.

NAVFAC

ANDERSON DRACE JOINT VENTURE

STUART CHARLES SMITH P.E. LICENSE NO. 49738 STATE OF FLORIDA PROFESSIONAL ENGINEER SEAL

EGH ARCHITECTS
eleyguildhardy.com
A/E INFO

APPROVED

FOR COMMANDER NAVFAC

ACTIVITY

SATISFACTORY TO DATE JAN 17, 2012

DES SL DRW AJB CHK SCS

DEPARTMENT OF THE NAVY
NAVAL FACILITIES ENGINEERING COMMAND SOUTHEAST
NAVAL AIR STATION JACKSONVILLE, FL
PT GULF-COAST
CORRY STATION
PENSACOLA, FLORIDA

BUILDING P-724 Corry "A" School BEQ
REVISED [2+0] MODULE DESIGN

BRACING ELEVATIONS

SCALE: AS INDICATED

EPROJECT NO.: 19045

CONSTR. CONTR. NO. N69450-10-C-0755

NAVFAC DRAWING NO. 15050385

SHEET 40 OF 204

S200

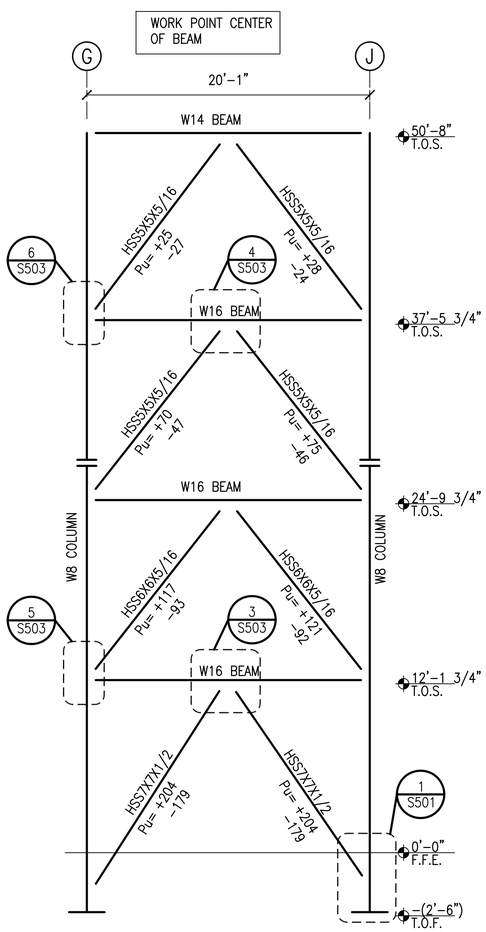

1 FRAME #5
NOT TO SCALE

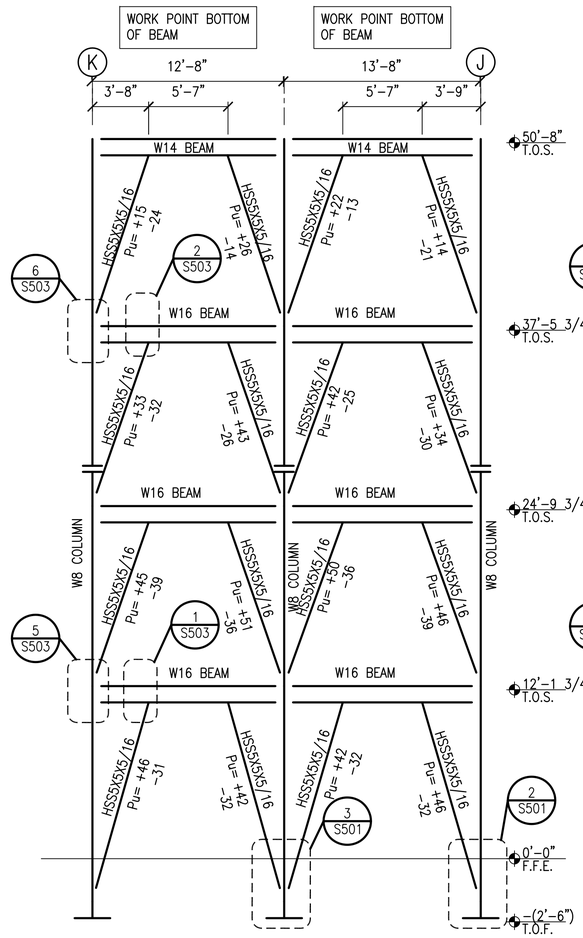

2 FRAME #6
NOT TO SCALE

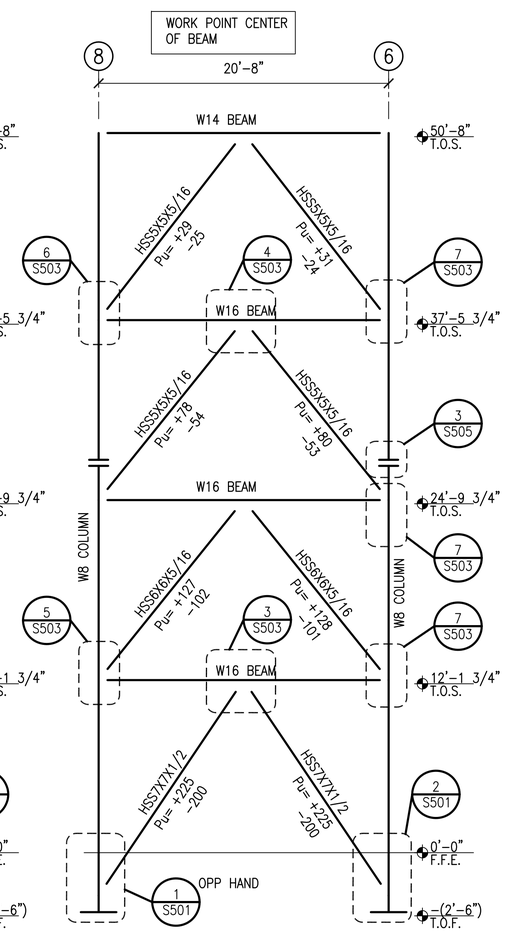

3 FRAME #7
NOT TO SCALE

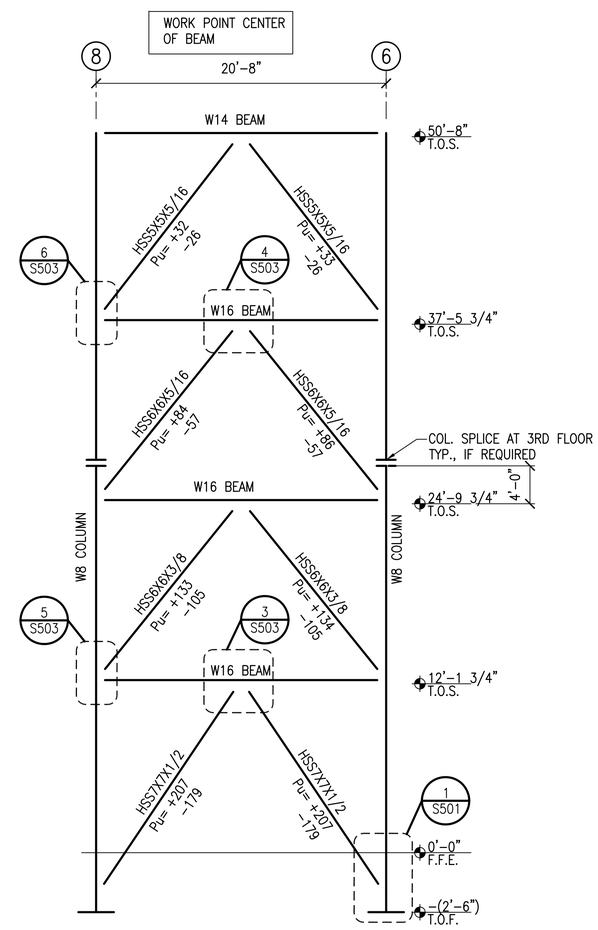

4 FRAME #8
NOT TO SCALE

SCHMIDT CONSULTING · GROUP, INC.
FLORIDA LICENSE - NUMBER 05371
40 S Palafox Pl, Ste 300 - Pensacola, FL 32502
P: 850-435-0050 - F: 850-432-8631
STUART SMITH P.E.
FLORIDA LICENSE NUMBER 49738
SCG project: 2010-152

SYM	DESCRIPTION	DATE	APPR.

NAVFAC

ANDERSON DRACE JOINT VENTURE

STUART CHARLES SMITH P.E. LICENSE NO. 49738 STATE OF FLORIDA PROFESSIONAL ENGINEER SEAL

EGH ARCHITECTS
eleyguildhardy.com
A/E INFO

APPROVED
FOR COMMANDER NAVFAC
ACTIVITY
SATISFACTORY TO DATE JAN 17, 2012
DES SL DRW AJB CHK SCS

DEPARTMENT OF THE NAVY
NAVAL FACILITIES ENGINEERING COMMAND SOUTHEAST
PT GULF/COAST
CORRY STATION
NAVAL FACILITIES ENGINEERING COMMAND
NAVAL AIR STATION JACKSONVILLE, FL
PENSACOLA, FLORIDA
BUILDING P-724 Corry "A" School BEQ
REVISED [2+0] MODULE DESIGN
BRACING ELEVATIONS

SCALE: AS INDICATED
EPROJECT NO.: 19045
CONSTR. CONTR. NO. N69450-10-C-0755
NAVFAC DRAWING NO. 15050386
SHEET 41 OF 204
S201

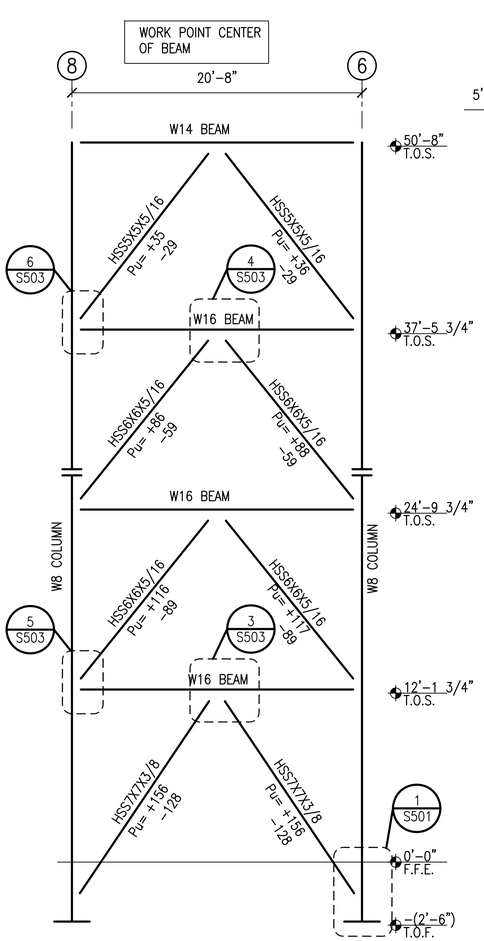

1 FRAME #9
NOT TO SCALE

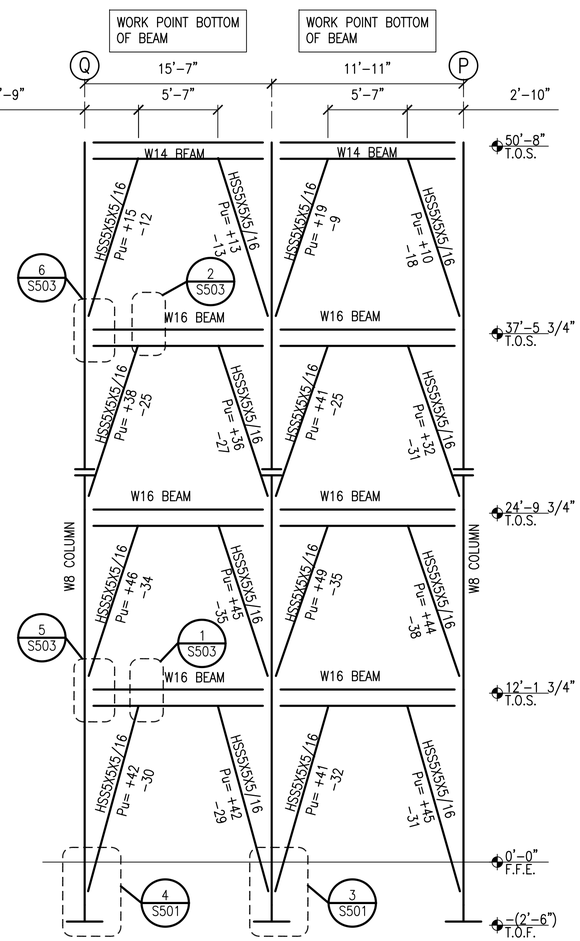

2 FRAME #10
NOT TO SCALE

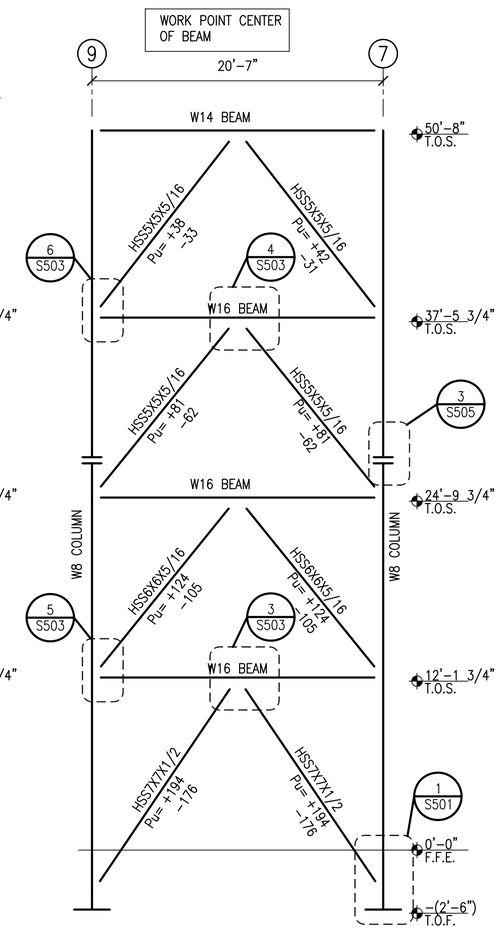

3 FRAME #11
NOT TO SCALE

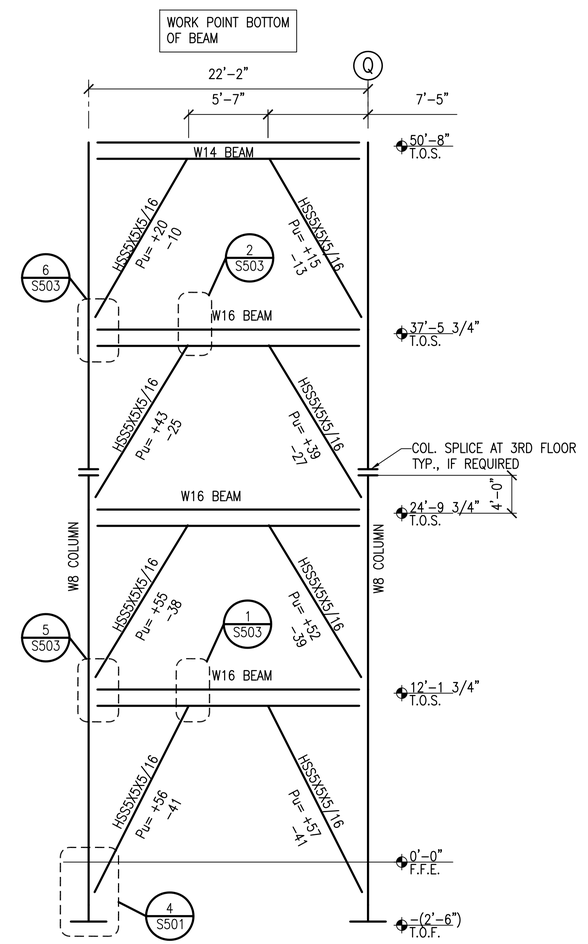

4 FRAME #12
NOT TO SCALE

SCHMIDT CONSULTING · GROUP, INC.
FLORIDA LICENSE - NUMBER 05371
40 S Palafox Pl, Ste 300 - Pensacola, FL 32502
P: 850-438-0050 - F: 850-432-8631
STUART SMITH P.E.
FLORIDA LICENSE NUMBER 49738
SCG project: 2010-152

SYM	DESCRIPTION	DATE	APPR.

NAVFAC

ANDERSON DRACE JOINT VENTURE

STUART CHARLES SMITH P.E. LICENSE NO. 49738 STATE OF FLORIDA PROFESSIONAL ENGINEER SEAL

EGH ARCHITECTS eleyguildhardy.com A/E INFO

APPROVED

FOR COMMANDER NAVFAC

ACTIVITY

SATISFACTORY TO DATE JAN 17, 2012

DES SL DRW AJB CHK SCS

DEPARTMENT OF THE NAVY
NAVAL FACILITIES ENGINEERING COMMAND SOUTHEAST
(FT GULF/CONST)
CORRY STATION

NAVAL FACILITIES ENGINEERING COMMAND
NAVAL AIR STATION JACKSONVILLE, FL
PENSACOLA, FLORIDA

BUILDING P-724 Corry "A" School BEQ
REVISED [2+0] MODULE DESIGN

BRACING ELEVATIONS

SCALE: AS INDICATED

EPROJECT NO.: 10-045

CONSTR. CONTR. NO. N69450-10-C-0755

NAVFAC DRAWING NO. 15050387

SHEET 42 OF 204

S202

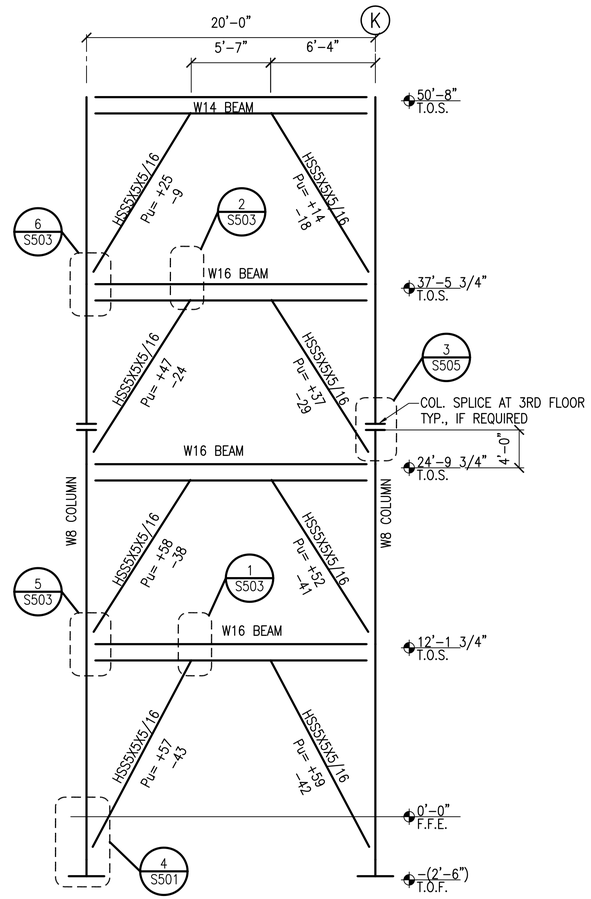

1 FRAME #13
NOT TO SCALE

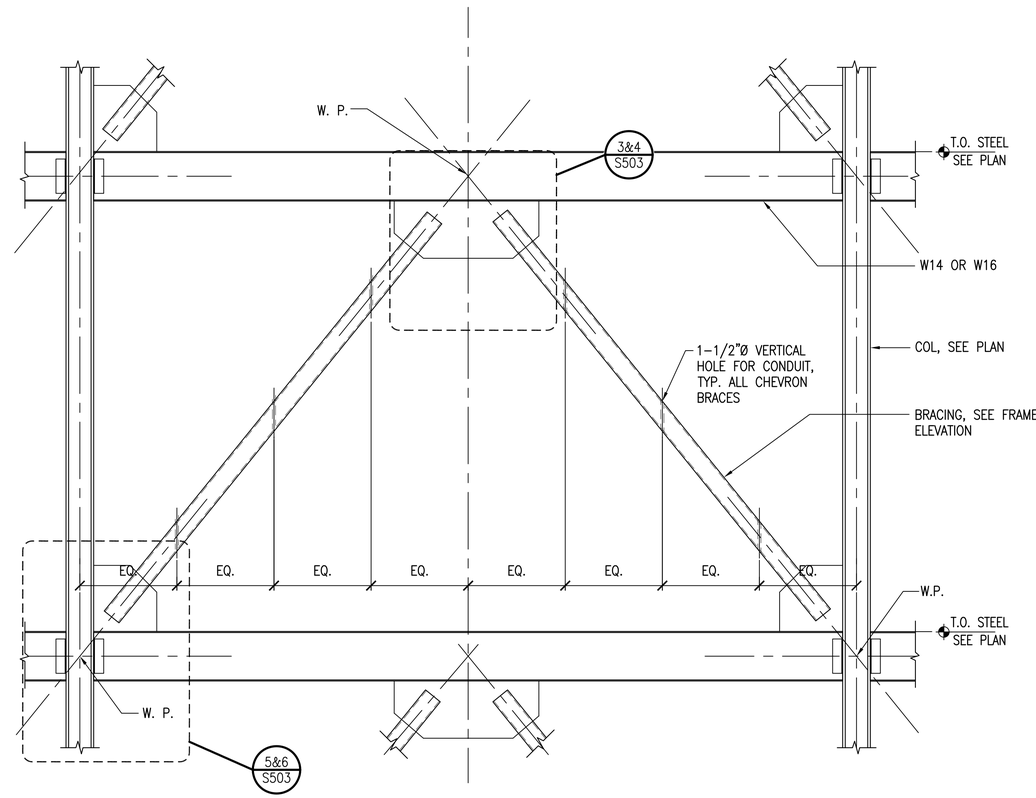

2 TYPICAL CHEVRON BRACING
2' 0' 2' 4'
SCALE: 1/2"=1'-0"

SCHMIDT CONSULTING · GROUP, INC.
FLORIDA LICENSE - NUMBER 05371
40 S Palafox Pl, Ste 300 · Pensacola, FL 32502
P: 850-438-0050 · F: 850-432-8631
STUART SMITH P.E.
FLORIDA LICENSE NUMBER 49738
SCG project: 2010-152

SYM	DESCRIPTION	DATE	APPR.

NAVFAC

ANDERSON DRACE JOINT VENTURE

STUART CHARLES SMITH LICENSE NO. 49738 STATE OF FLORIDA PROFESSIONAL ENGINEER SEAL

EGH ARCHITECTS
eleyguildhardy.com
A/E INFO

APPROVED
FOR COMMANDER NAVFAC
ACTIVITY
SATISFACTORY TO DATE JAN 17, 2012
DES SL DRW AJB CHK SCS

DEPARTMENT OF THE NAVY
NAVAL FACILITIES ENGINEERING COMMAND
IPT GULF COAST
CORRY STATION

NAVAL FACILITIES ENGINEERING COMMAND SOUTHEAST
NAVAL AIR STATION JACKSONVILLE, FL
PENSACOLA, FLORIDA

BUILDING P-724 Corry "A" School BEQ
REVISED [2+0] MODULE DESIGN

BRACING ELEVATIONS

SCALE: AS INDICATED
EPROJECT NO.: 10-045
CONSTR. CONTR. NO. N69450-10-C-0755
NAVFAC DRAWING NO. 15050388
SHEET 43 OF 204
S203

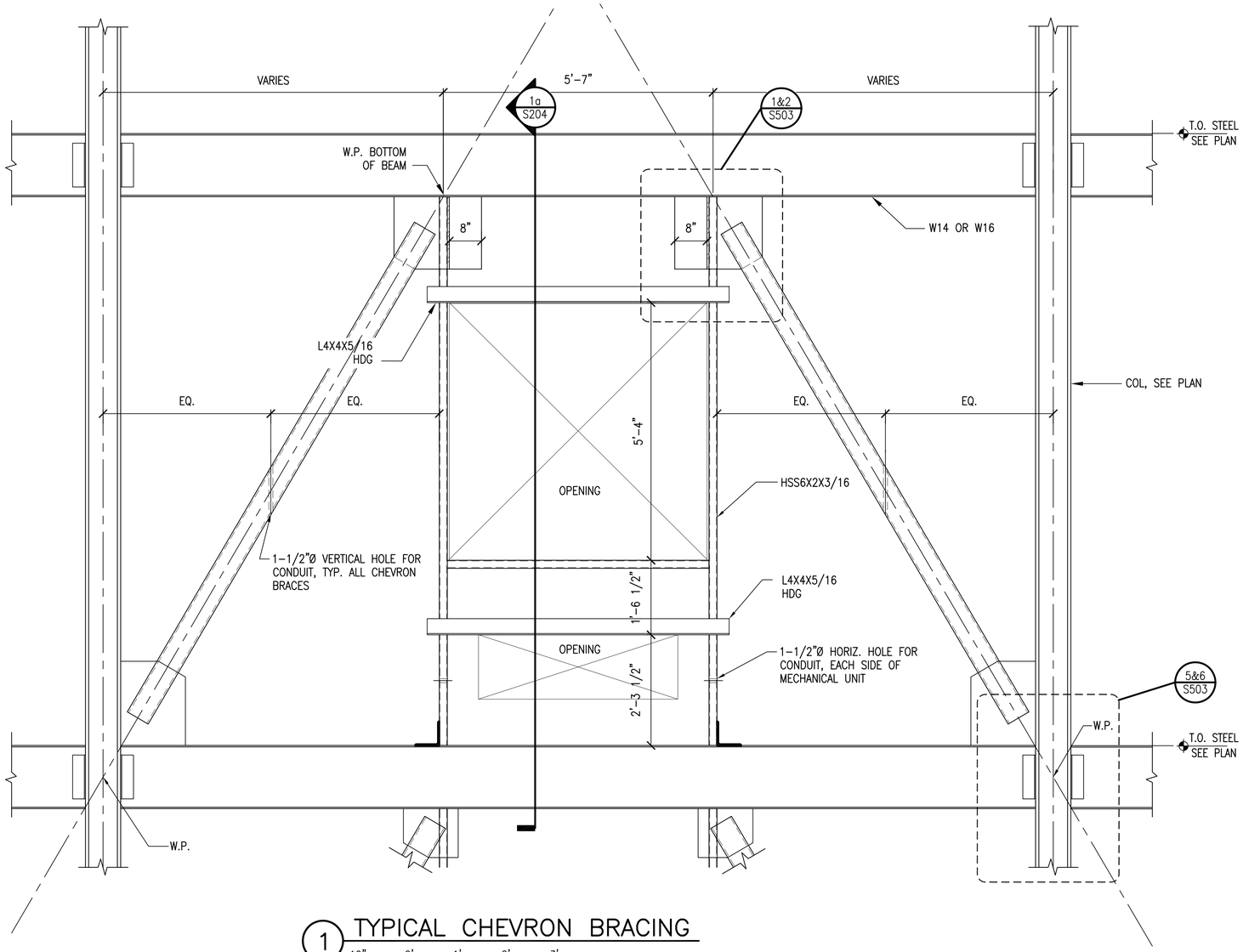

1 TYPICAL CHEVRON BRACING

12" 0' 1' 2' 3'

SCALE: 3/4"=1'-0"

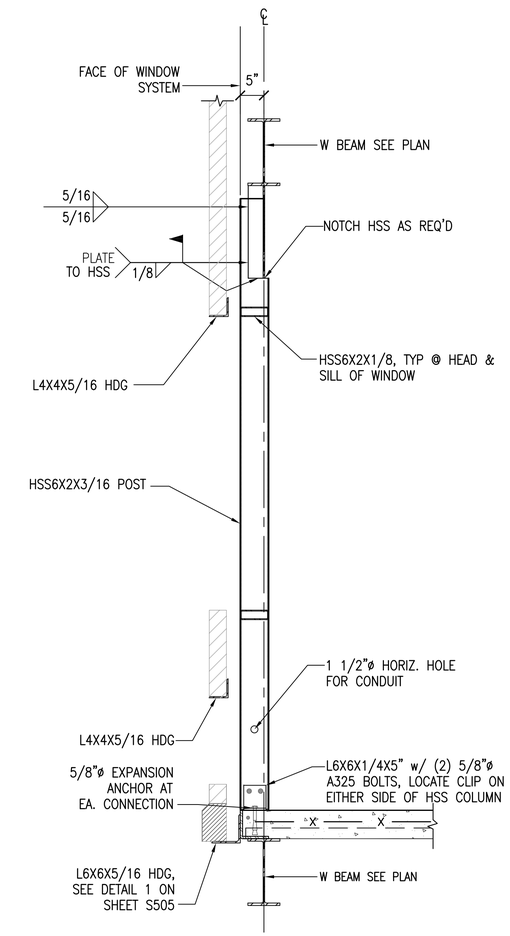

1a SECTION

12" 0' 1' 2' 3'

SCALE: 3/4"=1'-0"

SCHMIDT CONSULTING · GROUP, INC.
FLORIDA LICENSE - NUMBER 05371
40 S Palafox Pl, Ste 300 · Pensacola, FL 32502
P: 850-438-0050 · F: 850-432-8631
STUART SMITH P.E.
FLORIDA LICENSE NUMBER 49738
SCG project: 2010-152

SYM	DESCRIPTION	DATE	APPR.

NAVFAC

ANDERSON DRACE
JOINT VENTURE

STUART CHARLES SMITH PE
LICENSE NO. 49738
STATE OF FLORIDA
PROFESSIONAL ENGINEER
SEAL

EGH ARCHITECTS
eleyguildhardy.com
A/E INFO

APPROVED

FOR COMMANDER NAVFAC

ACTIVITY

SATISFACTORY TO DATE JAN 17, 2012

DES SL DRW AJB CHK SCS

DEPARTMENT OF THE NAVY
NAVAL FACILITIES ENGINEERING COMMAND
IPT GULF COAST

NAVAL FACILITIES ENGINEERING COMMAND SOUTHEAST
NAVAL AIR STATION JACKSONVILLE FL

CORRY STATION

PENSACOLA, FLORIDA

BUILDING P-724 Corry "A" School BEQ
REVISED [2+0] MODULE DESIGN

BRACING ELEVATIONS

SCALE: AS INDICATED

EPROJECT NO.: 10-045

CONSTR. CONTR. NO.
N69450-10-C-0755

NAVFAC DRAWING NO.
15050389

SHEET 44 OF 204

S204

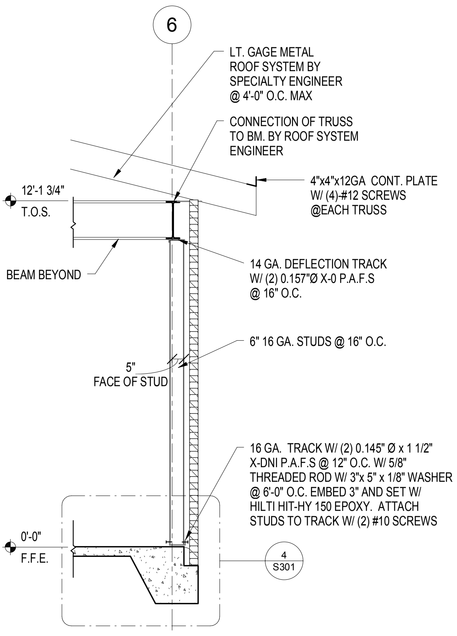

1 WALL SECTION

S100

SCALE: 3/8"=1'-0"

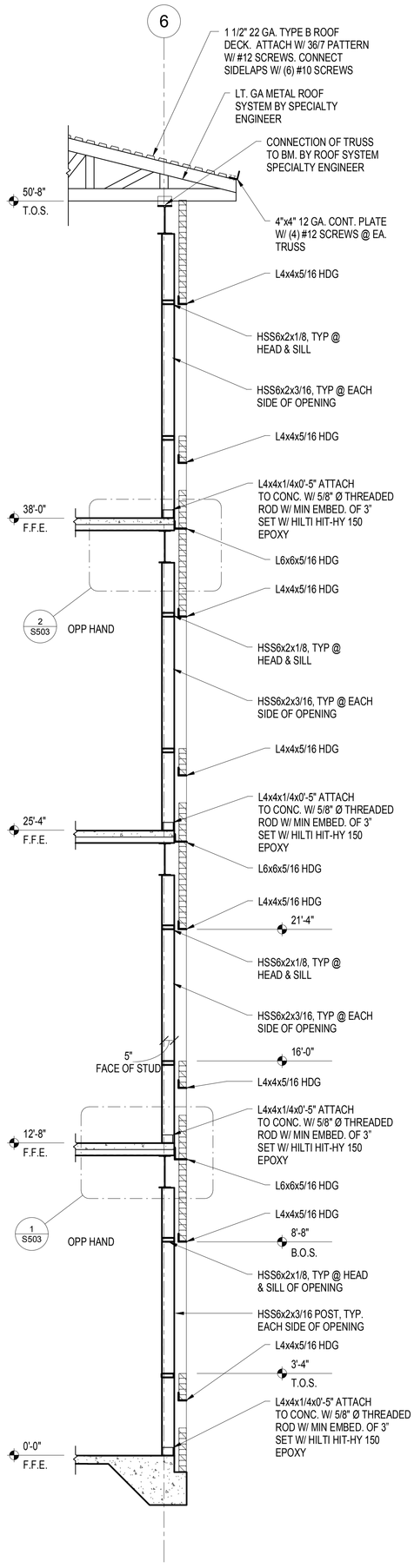

2 TYPICAL WALL SECTION

S100, S110, S120, S121, S130

SCALE: 3/8"=1'-0"

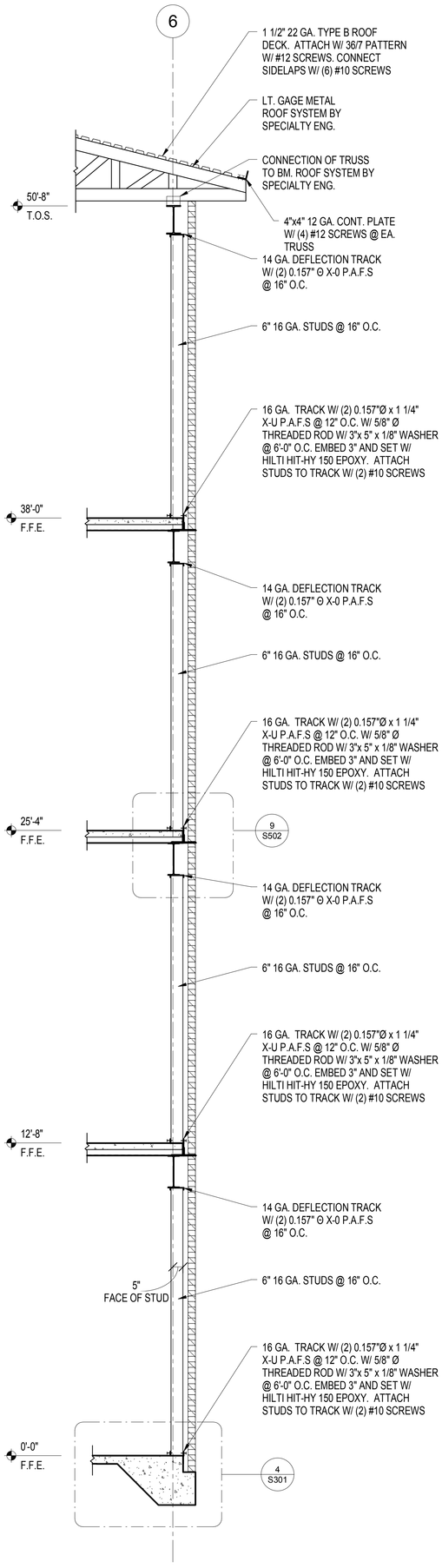

3 TYPICAL WALL SECTION

S100, S110, S120, S121, S130

SCALE: 3/8"=1'-0"

SCHMIDT CONSULTING GROUP, INC.
FLORIDA LICENSE NUMBER: 00371
1301 STUART STREET
JACKSONVILLE, FLORIDA 32202
P: 904-398-9000 F: 904-398-9001
STUART SMITH PE
FLORIDA LICENSE NUMBER: 44798
SCG project: 2005-152

DEPARTMENT OF THE NAVY — NAVAL FACILITIES ENGINEERING COMMAND

NAVAL FACILITIES ENGINEERING COMMAND SOUTHEAST

IPT GULFCOAST — NAVAL AIR STATION JACKSONVILLE, FL

CORRY STATION — PENSACOLA, FLORIDA

BUILDING P-724 Corry "A" School BEQ

REVISED [2+0] MODULE DESIGN

BUILDING SECTIONS

SHEET S210

SCALE: AS INDICATED

EFIS PROJECT NO. 19446

CONTR. NO. N69450-10-C-0755

NAVFAC ENGINEER: Mr. Dr. Joe

NAVFAC DWG NO. 15050390

DATE: DEC 13, 2011

DRWN: IL CHK: SCS

SATURN CORP. CO.

KLOTH

COMMANDER NAVFAC

APPROVED

ETG ARCHITECTS — etoyguilliatecry.com

PE STUART CHARLES SMITH — STATE OF FLORIDA — PROFESSIONAL ENGINEER — LICENSE NO. 44798

ANDERSON DRACE JOINT VENTURE

NAVFAC

SYM	DESCRIPTION	DATE	APPR

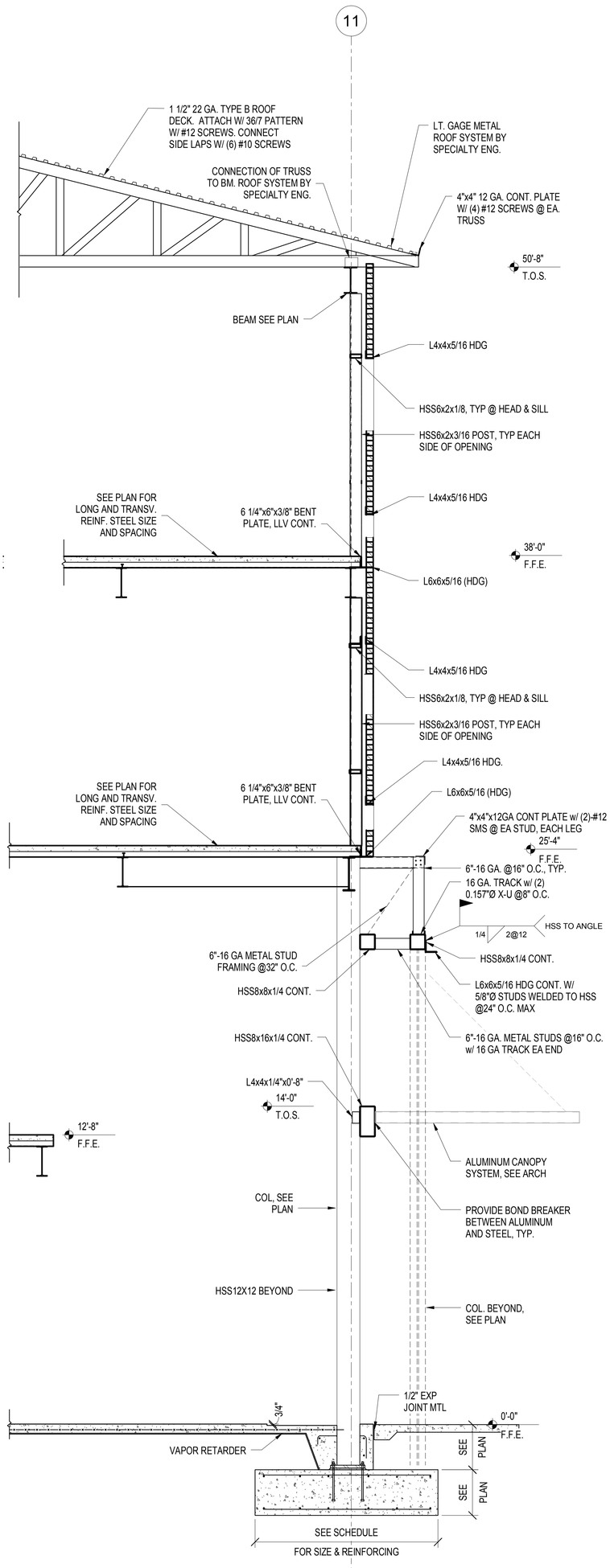

1 BUILDING SECTION @ FRONT ENTRY

S100, S110, S120, S121, S130

2' 1' 0' 2' 4' 6'

SCALE: 3/8"=1'-0"

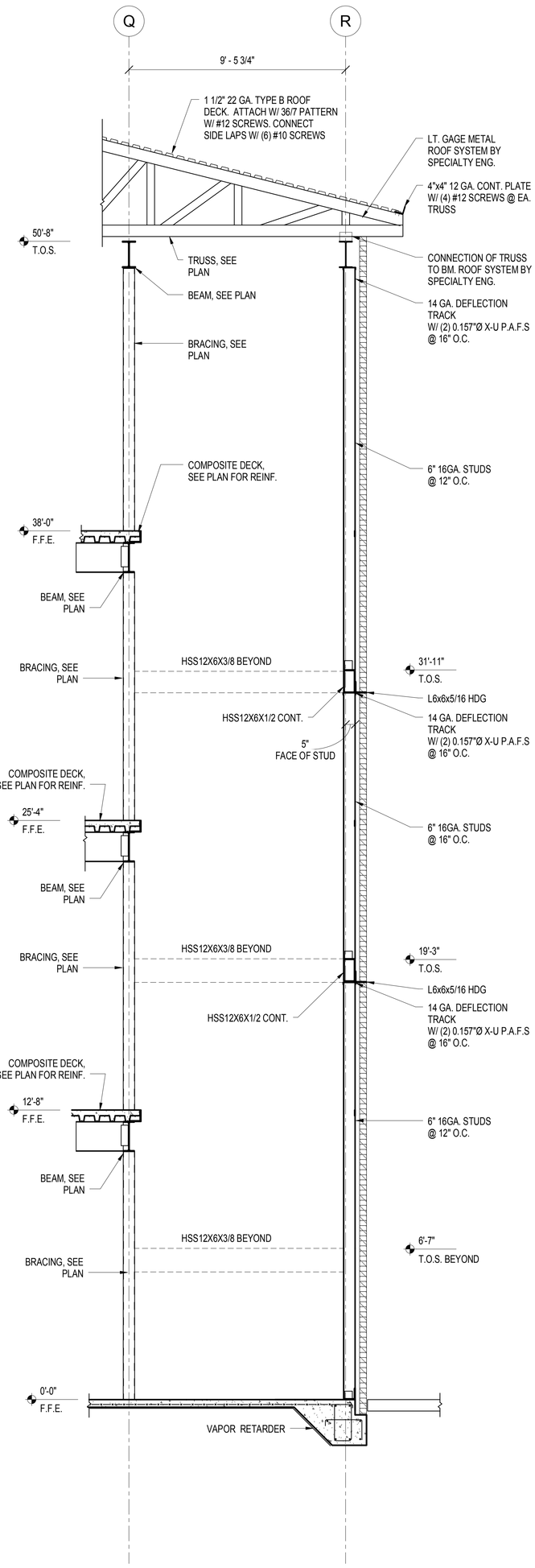

2 BUILDING SECTION @ STAIR

S100, S110, S120, S121, S130

2' 1' 0' 2' 4' 6'

SCALE: 3/8"=1'-0"

SCHMIDT CONSULTING GROUP, INC.
FLORIDA LICENSE NUMBER 0 03371
1301 STUART SMITH LE
FORT WALTON BEACH, FLORIDA 32542
P 850-428-0500 F 850-428-0513
FLORIDA LICENSED ARCHITECTS
STUART SMITH LE
FLORIDA LICENSE NUMBER AR 0013798
SCG project: 2020-152

DEPARTMENT OF THE NAVY — NAVAL FACILITIES ENGINEERING COMMAND
NAVAL FACILITIES ENGINEERING COMMAND SOUTHEAST
IPT GULFCOAST — NAVAL AIR STATION JACKSONVILLE, FL
CORRY STATION — PENSACOLA, FLORIDA

BUILDING P-724 Corry "A" School BEQ
REVISED [2+0] MODULE DESIGN

BUILDING SECTIONS

SCALE: AS INDICATED
EFIRS PROJECT NO. 19348
CONTRACT NO. N69450-10-C-0755
NAVFAC ERP NO. 15050391
SHEET 4 OF 204
S211

DATE: DEC 21 2021
DRWN: S. CHK: RCS

ECG ARCHITECTS
ecgarchitects.com

ANDERSON DRACE JOINT VENTURE

NAVFAC

SYM	DESCRIPTION	DATE	APPR

NOTE: PLACE CONTRACTION JOINTS AT AND BETWEEN COLUMN GRIDS FOR ALL SLABS ON GRADE. DO NOT EXCEED A 2 TO 1 WIDTH TO LENGTH RATIO. SEE PLAN FOR LOCATIONS.

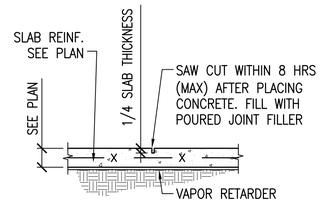

*SAW CUT

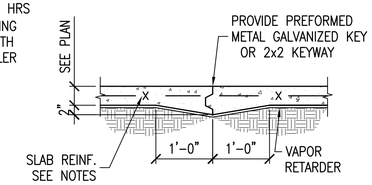

*KEYED CONTRACTION JOINT

*CONTRACTOR'S OPTION

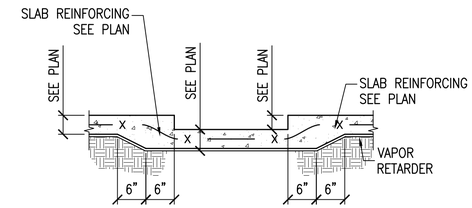

COORDINATE SIZE & DEPTH OF RECESS W/ ARCHITECTURAL

1 SLAB CONTRACTION JOINT

S101

12" 0' 1' 2' 3'

SCALE: 3/4"=1'-0"

2 RECESSED SLAB DETAIL

S100

12" 0' 1' 2' 3'

SCALE: 3/4"=1'-0"

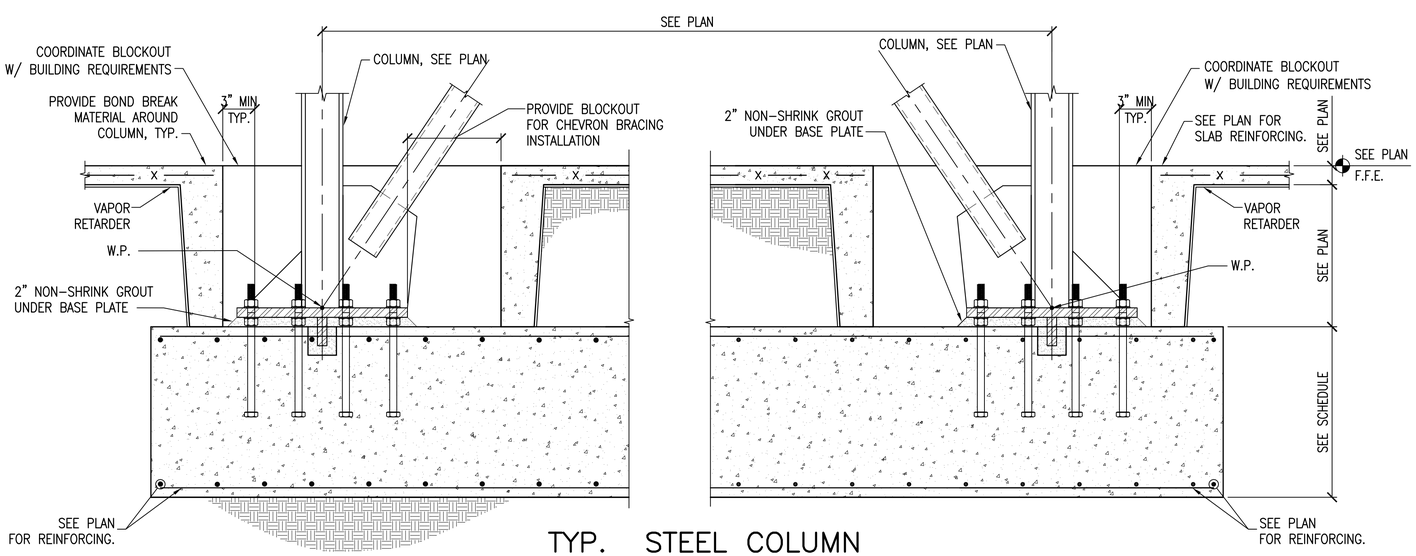

3 TYP. STEEL COLUMN FOOTING @ BRACING

S100

12" 0' 1' 2' 3'

SCALE: 3/4"=1'-0"

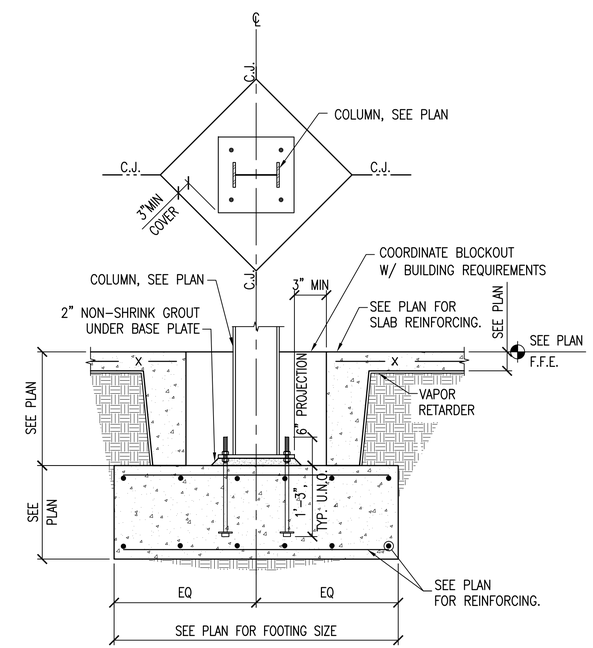

4 TYP. STEEL COLUMN FOOTING

S100

12" 0' 1' 2' 3'

SCALE: 3/4"=1'-0"

SCHMIDT CONSULTING · GROUP, INC.
FLORIDA LICENSE - NUMBER 05371
40 S Palafox Pl, Ste 300 · Pensacola, FL 32502
P: 850-438-0050 · F: 850-432-8631
STUART SMITH P.E.
FLORIDA LICENSE NUMBER 49738
SCG project: 2010-152

SYM	DESCRIPTION	DATE	APPR.

NAVFAC

ANDERSON DRACE JOINT VENTURE

STUART CHARLES SMITH LICENSE NO. 49738 STATE OF FLORIDA PROFESSIONAL ENGINEER

SEAL

EGH ARCHITECTS
eleyguildhardy.com
A/E INFO

APPROVED

FOR COMMANDER NAVFAC

ACTIVITY

SATISFACTORY TO DATE JAN 17, 2012

DES SL DRW AJB CHK SCS

DEPARTMENT OF THE NAVY
NAVAL FACILITIES ENGINEERING COMMAND
IPT GULF COAST
CORRY STATION

NAVAL FACILITIES ENGINEERING COMMAND SOUTHEAST
NAVAL AIR STATION JACKSONVILLE, FL
PENSACOLA, FLORIDA

BUILDING P-724 Corry "A" School BEQ
REVISED [2+0] MODULE DESIGN

CONCRETE DETAILS

SCALE: AS INDICATED

EPROJECT NO.: 15-045

CONSTR. CONTR. NO. N69450-10-C-0755

NAVFAC DRAWING NO. 15050392

SHEET 47 OF 204

S300

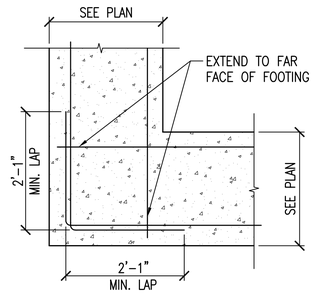

1 TYPICAL REINFORCING DETAIL @ FOOTING CORNER

12" 0' 1' 2' 3'
SCALE: 3/4"=1'-0"

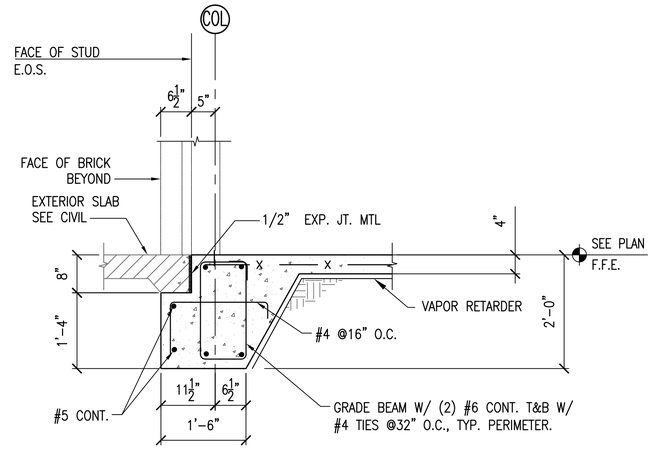

NOTE: CONTRACTOR OPTION TO SLOPE CONT. FOOTING AS SHOWN, OR TO FORM

2 CONT. FOOTING DETAIL @ DOOR

S100
12" 0' 1' 2' 3'
SCALE: 3/4"=1'-0"

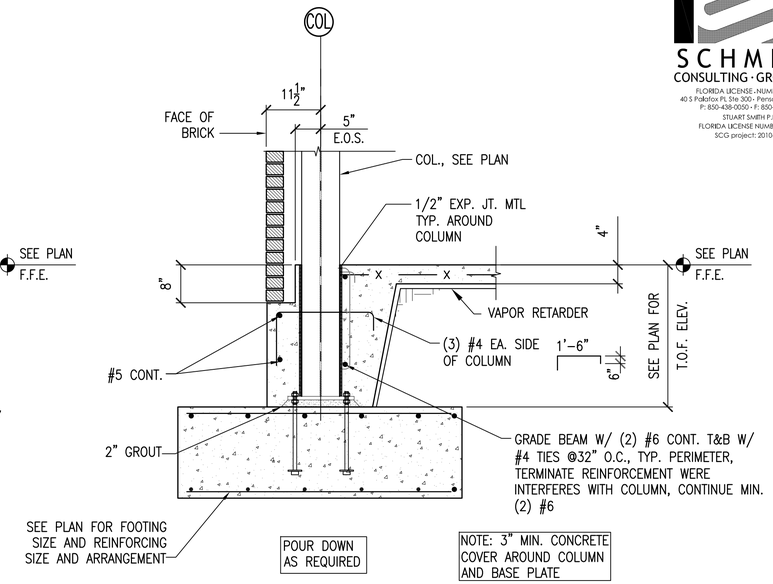

3 TYPICAL CONT. FOOTING DETAIL @ COLUMN

S100
12" 0' 1' 2' 3'
SCALE: 3/4"=1'-0"

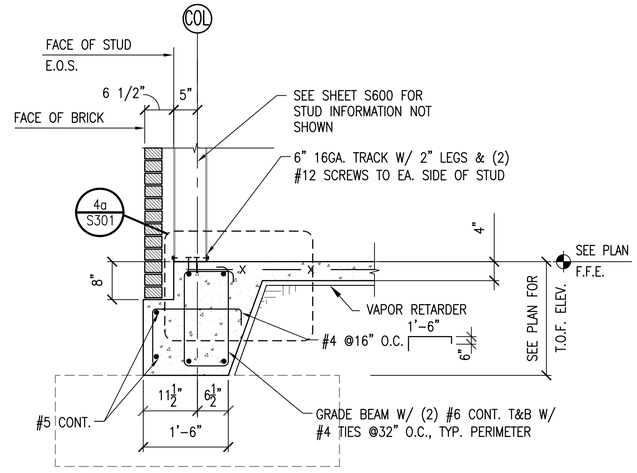

NOTE: CONTRACTOR OPTION TO SLOPE CONT. FOOTING AS SHOWN, OR TO FORM

4 TYPICAL CONT. FOOTING DETAIL

S100
12" 0' 1' 2' 3'
SCALE: 3/4"=1'-0"

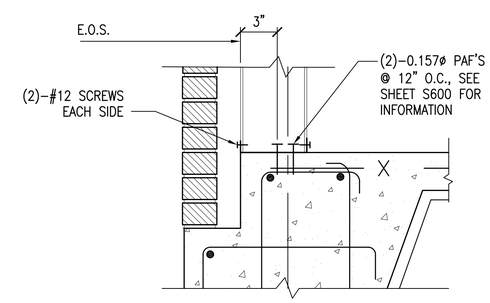

SEE DETAIL 4 ON SHEET S301 FOR INFORMATION NOT SHOWN

4a TYPICAL CONNECTION DETAIL

S301
8" 0' 8" 16"
SCALE: 1 1/2"=1'-0"

SCHMIDT CONSULTING · GROUP, INC.
FLORIDA LICENSE - NUMBER 05371
40 S Palafox Pl, Ste 300 · Pensacola, FL 32502
P: 850-438-0050 · F: 850-432-8631
STUART SMITH P.E.
FLORIDA LICENSE NUMBER 49738
SCG project: 2010-152

SYM	DESCRIPTION	DATE	APPR

NAVFAC
ANDERSON DRACE JOINT VENTURE
STUART CHARLES SMITH LICENSE NO. 49738 STATE OF FLORIDA PROFESSIONAL ENGINEER SEAL
EGH ARCHITECTS eleyguildhardy.com A/E INFO

APPROVED
FOR COMMANDER NAVFAC
ACTIVITY
SATISFACTORY TO DATE JAN 17, 2012
DES SL DRW AJB CHK SCS

DEPARTMENT OF THE NAVY
NAVAL FACILITIES ENGINEERING COMMAND SOUTHEAST
(PT GULF COAST)
NAVAL FACILITIES ENGINEERING COMMAND
NAVAL AIR STATION JACKSONVILLE, FL
CORRY STATION
PENSACOLA, FLORIDA
BUILDING P-724 Corry "A" School BEQ
REVISED [2+0] MODULE DESIGN
CONCRETE DETAILS

SCALE: AS INDICATED
EPROJECT NO.: 10-045
CONSTR. CONTR. NO. N69450-10-C-0755
NAVFAC DRAWING NO. 15050393
SHEET 48 OF 204
S301

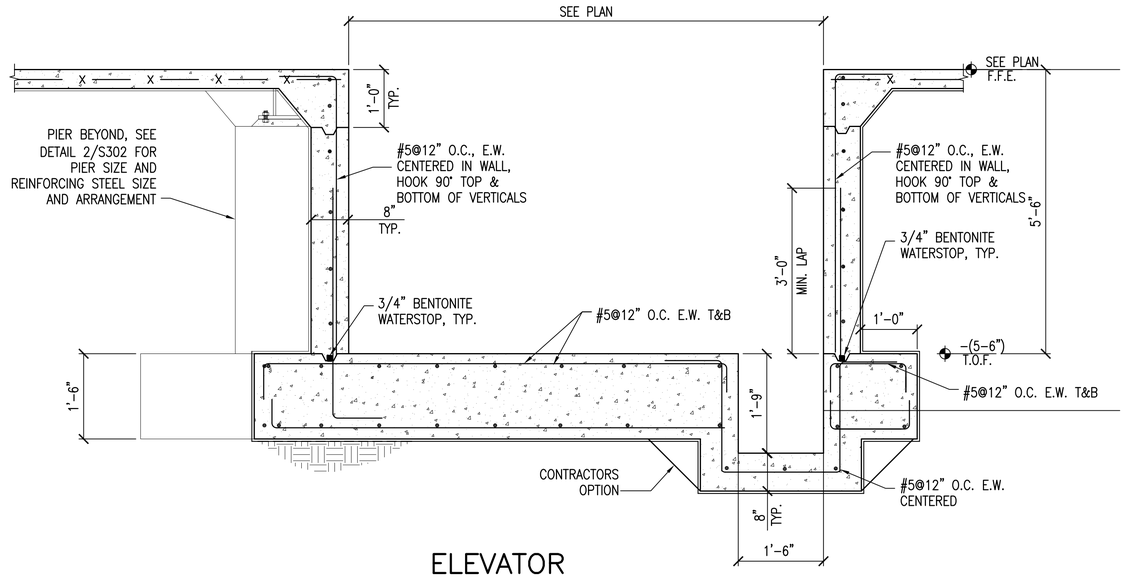

1 ELEVATOR WALL FOOTING

S100

12" 0' 1' 2' 3'

SCALE: 3/4"=1'-0"

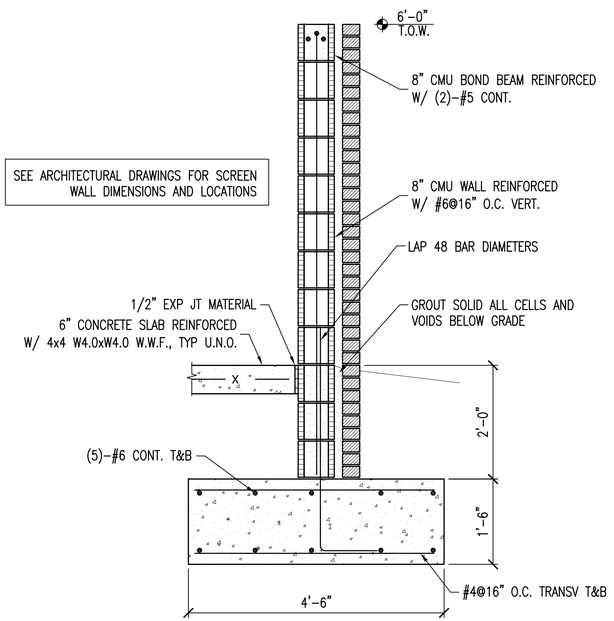

3 SITE SCREEN WALL DETAIL

12" 0' 1' 2' 3'

SCALE: 3/4"=1'-0"

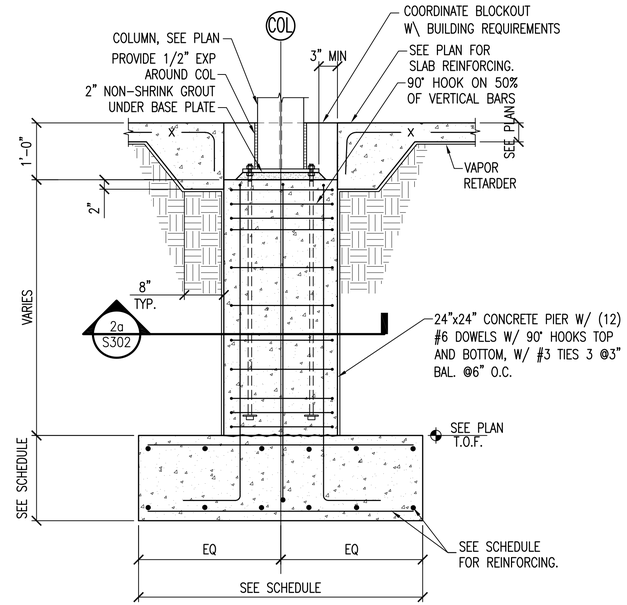

2 INTERIOR STEEL COLUMN FOOTING W/ PIER

S302

12" 0' 1' 2' 3'

SCALE: 3/4"=1'-0"

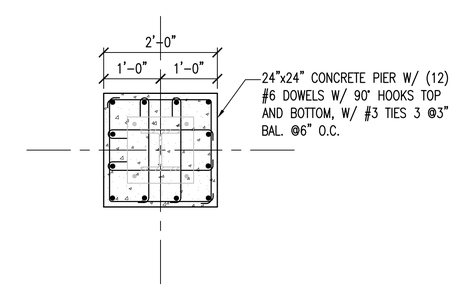

2a INTERIOR STEEL COLUMN FOOTING W/ PIER (PLAN VIEW)

S302

12" 0' 1' 2' 3'

SCALE: 3/4"=1'-0"

SCHMIDT CONSULTING · GROUP, INC.
FLORIDA LICENSE - NUMBER 05371
40 S Palafox Pl, Ste 300 · Pensacola, FL 32502
P: 850-438-0050 · F: 850-432-8631
STUART SMITH P.E.
FLORIDA LICENSE NUMBER 49738
SCG project: 2010-152

SYM	DESCRIPTION	DATE	APPR

NAVFAC

ANDERSON DRACE JOINT VENTURE

STUART CHARLES SMITH LICENSE NO. 49738 STATE OF FLORIDA PROFESSIONAL ENGINEER SEAL

EGH ARCHITECTS eleyguildhardy.com A/E INFO

APPROVED

FOR COMMANDER NAVFAC

ACTIVITY

SATISFACTORY TO DATE JAN 17, 2012

DES SL DRW AJB CHK SCS

DEPARTMENT OF THE NAVY
NAVAL FACILITIES ENGINEERING COMMAND SOUTHEAST
1PT GULF/FCO/ST
NAVAL FACILITIES ENGINEERING COMMAND
NAVAL AIR STATION JACKSONVILLE, FL
CORRY STATION
PENSACOLA, FLORIDA
BUILDING P-724 Corry "A" School BEQ
REVISED [2+0] MODULE DESIGN
CONCRETE DETAILS

SCALE: AS INDICATED

EPROJECT NO.: 15-045

CONSTR. CONTR. NO. N69450-10-C-0755

NAVFAC DRAWING NO. 15050394

SHEET 49 OF 204

S302

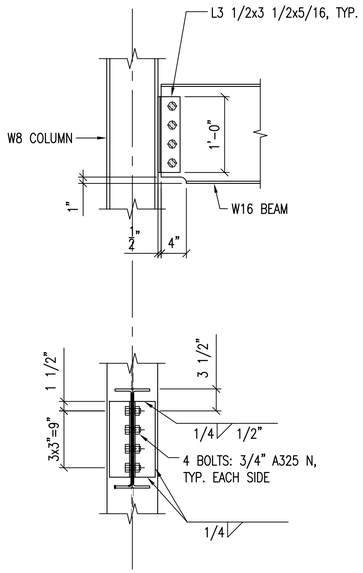

1 W16 BEAM TO COL

S110, S111

SCALE: 1"=1'-0"

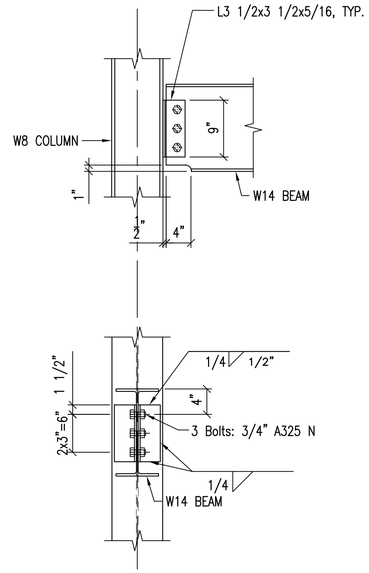

2 W14 BEAM TO COL

S110, S111

SCALE: 1"=1'-0"

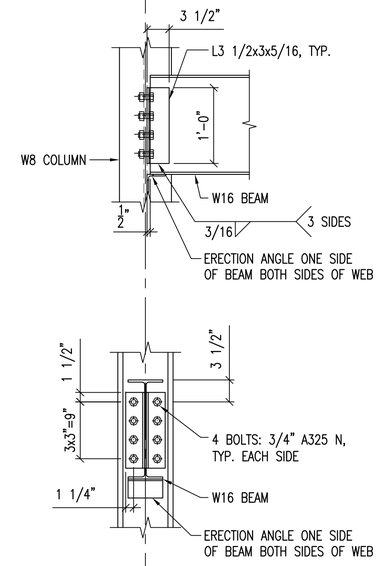

3 W16 BEAM TO COL (DOUBLE ANGLE)

S110, S111

SCALE: 1"=1'-0"

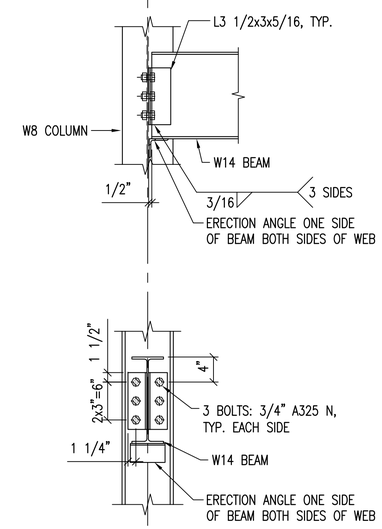

4 W14 BEAM TO COL (DOUBLE ANGLE)

S110, S111

SCALE: 1"=1'-0"

CONTRACTOR OPTION TO USE DOUBLE ANGLE CONNECTION (ABOVE) OR END PLATE CONNECTION (BELOW)

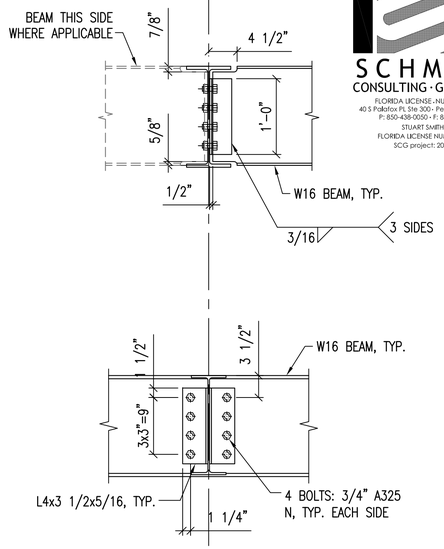

5 W16 BM TO W16 BM

S110, S111

SCALE: 1"=1'-0"

CONTRACTOR OPTION TO USE DOUBLE ANGLE CONNECTION (ABOVE) OR END PLATE CONNECTION (BELOW)

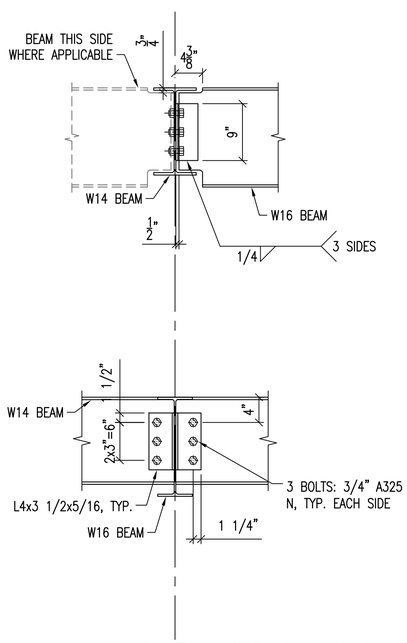

6 W16 BM TO W14 BM

S110, S111

SCALE: 1"=1'-0"

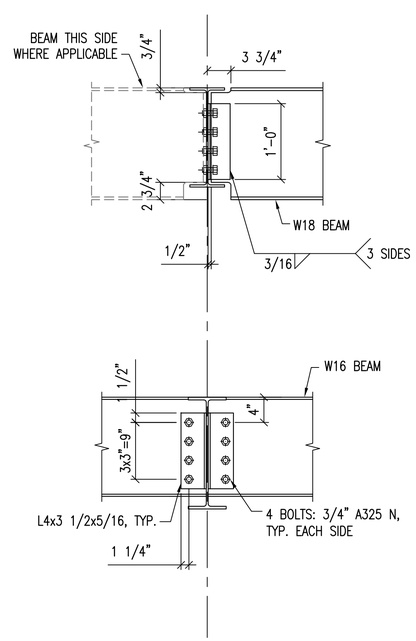

7 W18 BM TO W16 BM

S110, S111

SCALE: 1"=1'-0"

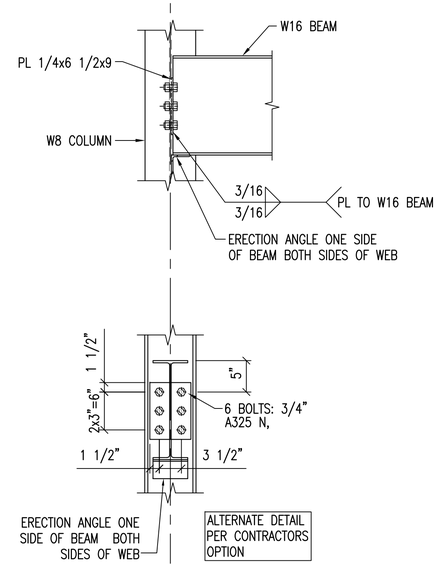

8 W16 BEAM TO COL (END PLATE)

S110, S111

SCALE: 1"=1'-0"

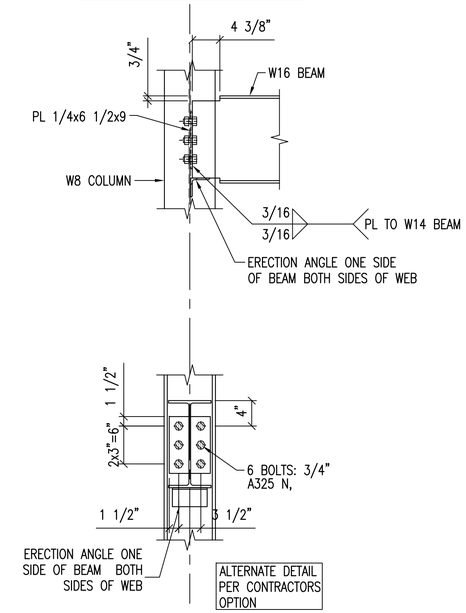

9 W14 BEAM TO COL (END PLATE)

S110, S111

SCALE: 1"=1'-0"

SCHMIDT CONSULTING · GROUP, INC.
FLORIDA LICENSE - NUMBER 05371
40 S Palafox Pl, Ste 300 · Pensacola, FL 32502
P: 850-438-0050 · F: 850-432-8631
STUART SMITH P.E.
FLORIDA LICENSE NUMBER 49738
SCG project: 2010-152

SYM	DESCRIPTION	DATE	APPR

NAVFAC

ANDERSON DRACE JOINT VENTURE

STUART CHARLES SMITH LICENSE NO. 49738 STATE OF FLORIDA PROFESSIONAL ENGINEER SEAL

EGH ARCHITECTS eleyguildhardy.com A/E INFO

APPROVED

FOR COMMANDER NAVFAC

ACTIVITY

SATISFACTORY TO DATE JAN 17, 2012

DES SL DRW AJB CHK SCS

DEPARTMENT OF THE NAVY
NAVAL FACILITIES ENGINEERING COMMAND
NAVAL FACILITIES ENGINEERING COMMAND SOUTHEAST
NAVAL AIR STATION JACKSONVILLE, FL
PT GULF-COAST
CORRY STATION
PENSACOLA, FLORIDA

BUILDING P-724 Corry "A" School BEQ
REVISED [2+0] MODULE DESIGN

STEEL DETAILS

SCALE: AS INDICATED

EPROJECT NO.: 15-045

CONSTR. CONTR. NO. N69450-10-C-0755

NAVFAC DRAWING NO. 15050395

SHEET 50 OF 204

S500

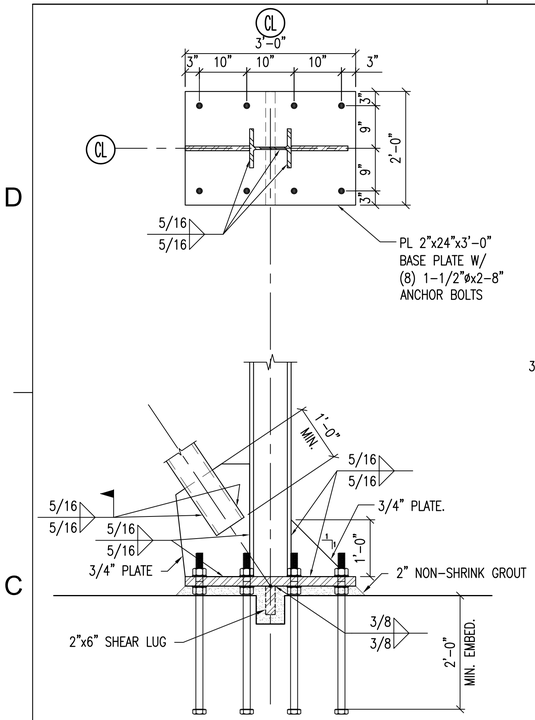

TYP. LATERAL BRACE CONNECTION

1 S200, S201, S202

SCALE: 3/4"=1'-0"

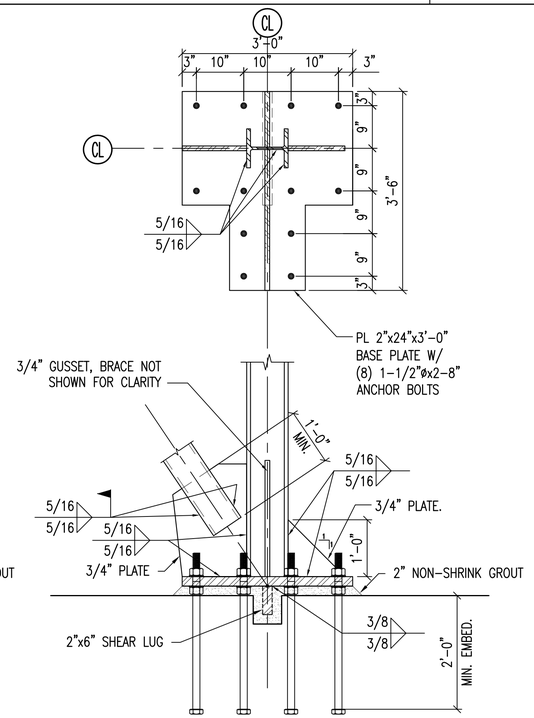

TYP. LATERAL BRACE CONNECTION

2 S201

SCALE: 3/4"=1'-0"

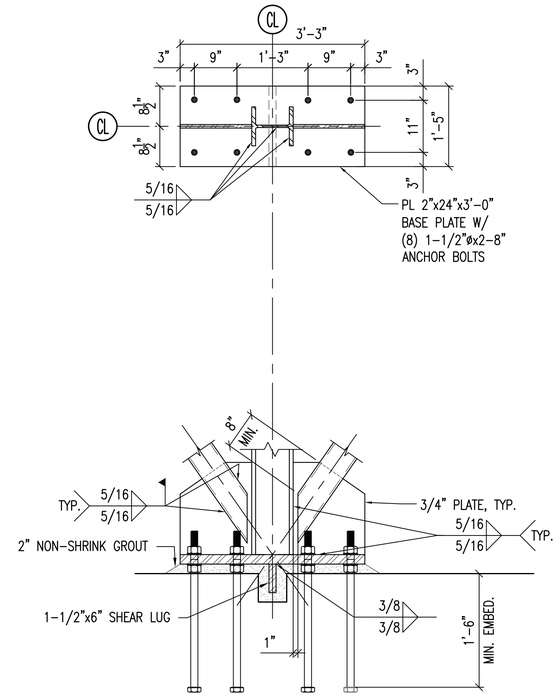

TYP. LATERAL BRACE CONNECTION

3 S200, S201, S202

SCALE: 3/4"=1'-0"

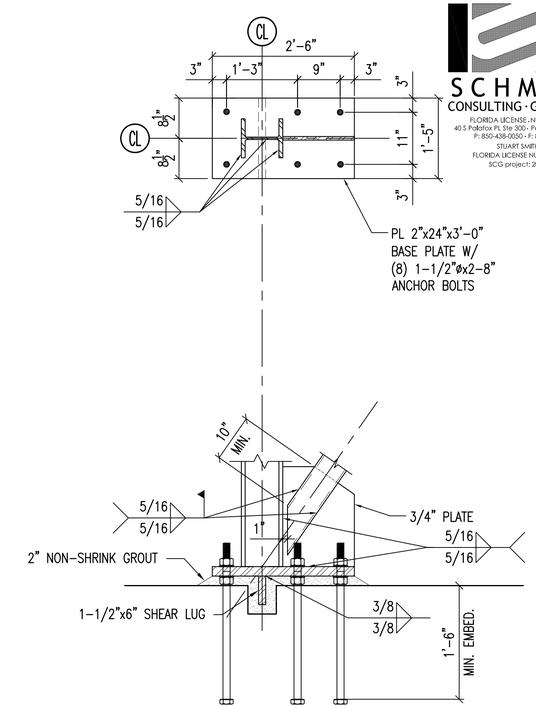

TYP. LATERAL BRACE CONNECTION

4 S200, S202, S203

SCALE: 3/4"=1'-0"

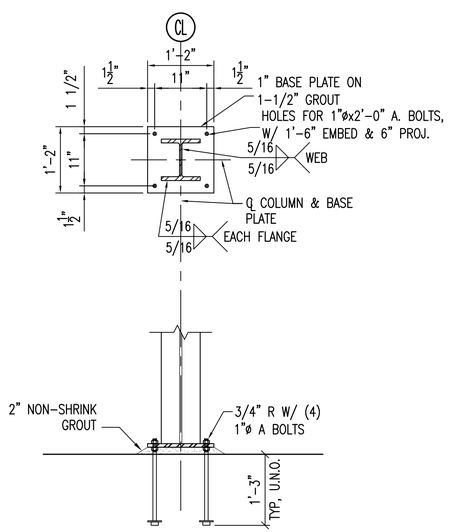

W8 BASE PLATE AT TYPICAL COL.

5

SCALE: 3/4"=1'-0"

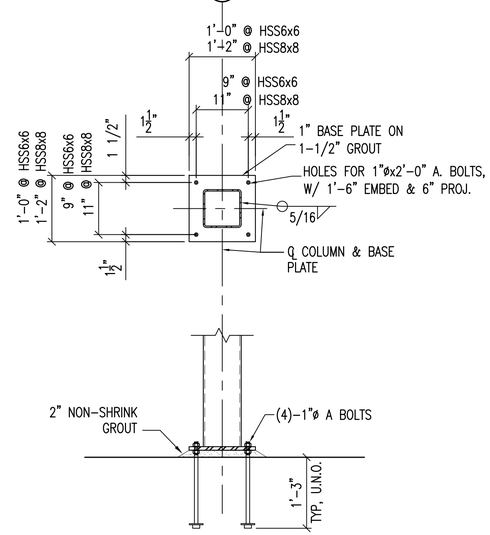

HSS6x6 BASE PLATE
HSS8x8 BASE PLATE

6

SCALE: 3/4"=1'-0"

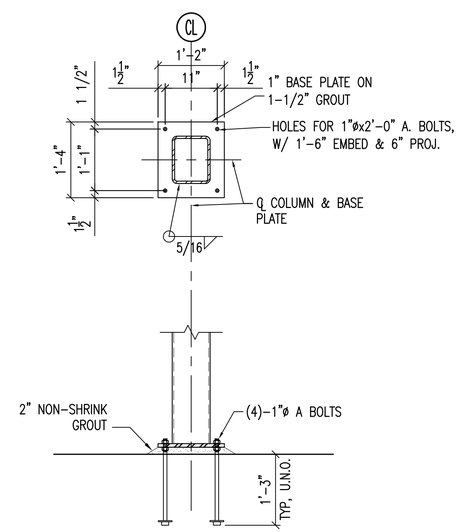

HSS10X8 BASE PLATE

7

SCALE: 3/4"=1'-0"

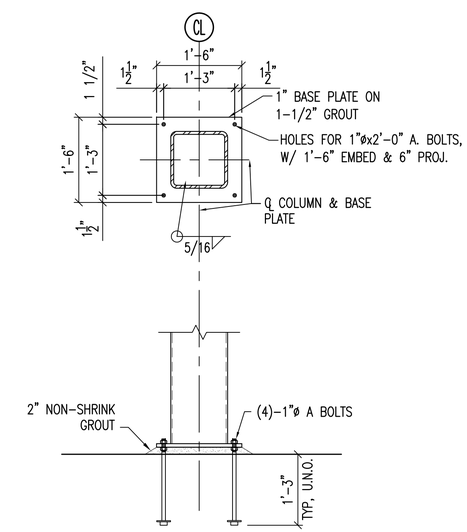

HSS12x12 BASE PLATE

8

SCALE: 3/4"=1'-0"

SCHMIDT CONSULTING · GROUP, INC.
FLORIDA LICENSE - NUMBER 05371
40 S Palafox Pl, Ste 300 · Pensacola, FL 32502
P: 850-438-0050 · F: 850-432-8631
STUART SMITH P.E.
FLORIDA LICENSE NUMBER 49738
SCG project: 2010-152

SYM	DESCRIPTION	DATE	APPR

NAVFAC

ANDERSON DRACE JOINT VENTURE

STUART CHARLES SMITH LICENSE NO. 49738 STATE OF FLORIDA PROFESSIONAL ENGINEER SEAL

EGH ARCHITECTS eleyguildhardy.com A/E INFO

APPROVED

FOR COMMANDER NAVFAC

ACTIVITY

SATISFACTORY TO DATE JAN 17, 2012

DES SL DRW AJB CHK SCS

DEPARTMENT OF THE NAVY
NAVAL FACILITIES ENGINEERING COMMAND SOUTHEAST
PT GULF-COAST
NAVAL FACILITIES ENGINEERING COMMAND
NAVAL AIR STATION JACKSONVILLE, FL
CORRY STATION
PENSACOLA, FLORIDA

BUILDING P-724 Corry "A" School BEQ
REVISED [2+0] MODULE DESIGN

STEEL DETAILS

SCALE: AS INDICATED

EPROJECT NO.: 15045

CONSTR. CONTR. NO. N69450-10-C-0755

NAVFAC DRAWING NO. 15050396

SHEET 51 OF 204

S501

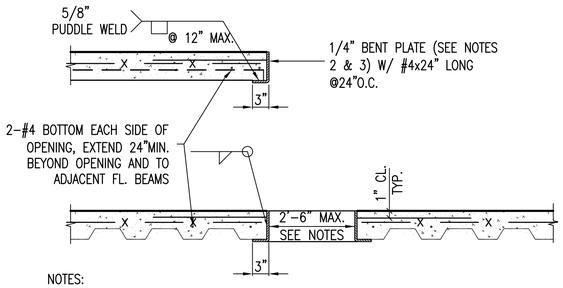

NOTES:

1. SEE OTHER DETAILS FOR ADDITIONAL REQUIREMENTS AT LARGE OPENINGS IN SLABS.
2. BEND 1/4" PLATE TO RADIUS AROUND CIRCULAR OPENINGS.
3. ALTERNATE TO 1/4" PLATE; USE PREFORMED 14 GAGE MIN. SLEEVES PROVIDING ANCHORAGE TO CONCRETE AT TOP AND BOTTOM OF SLAB.

1 TYP. COMPOSITE SLAB OPENING

12" 0' 1' 2' 3'
SCALE: 3/4"=1'-0"

2 NOT USED

12" 0' 1' 2' 3'
SCALE: 3/4"=1'-0"

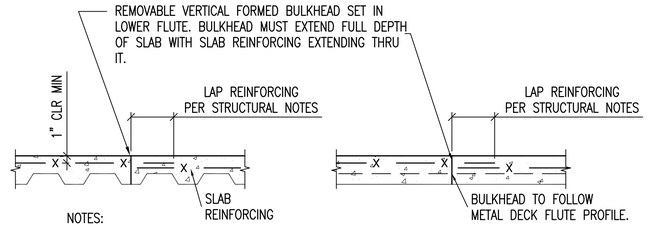

NOTES:

1. CONSTRUCTION JOINTS PARALLEL TO DECK FLUTES SHALL BE LOCATED NO CLOSER THAN 5'-0" FROM THE CENTER LINE OF THE NEAREST GIRDER.
2. CONSTRUCTION JOINTS PERPENDICULAR TO DECK FLUTES SHALL BE LOCATED AT THE CENTER LINE OF THE METAL DECK SPAN.
3. AT THE CONTRACTOR'S OPTION. PREFORMED METAL SHEAR KEY FOLLOWING CONTOUR OF METAL DECK FLUTES MAY BE USED WITH SLAB REINFORCING STOPPING EACH SIDE AND #3 DOWELS x2'-0"(CENTERED ON JOINT) AT 18" O.C.

3 TYP. CONSTRUCTION JOINT IN SLAB

12" 0' 1' 2' 3'
SCALE: 3/4"=1'-0"

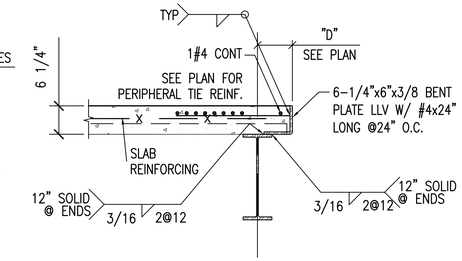

NOTE: THIS DETAIL IS NOT APPLICABLE WHEN DISTANCE "D" EXCEEDS 0'-7"

(DECK SPAN PERPENDICULAR TO BEAM)

4 SLAB EDGE

S110
12" 0' 1' 2' 3'
SCALE: 3/4"=1'-0"

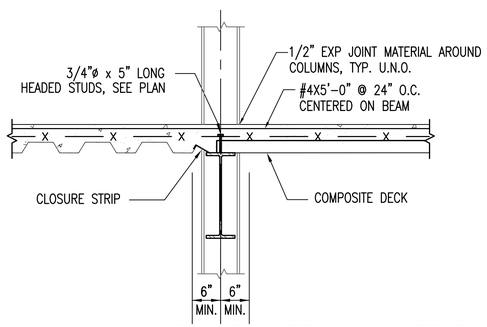

5 CLOSURE DETAIL WHERE DECK CHANGES DIRECTION

12" 0' 1' 2' 3'
SCALE: 3/4"=1'-0"

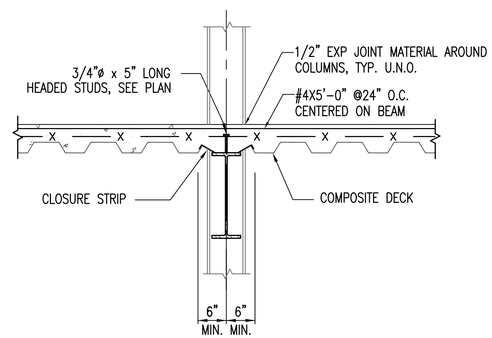

6 DETAIL AT GIRDER

S110, S111
12" 0' 1' 2' 3'
SCALE: 3/4"=1'-0"

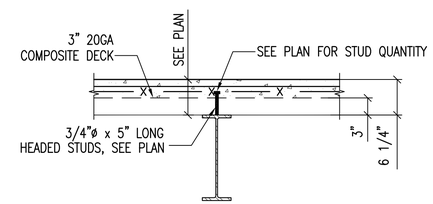

7 TYPICAL SECTION THRU COMPOSITE BM.

S110, S111
12" 0' 1' 2' 3'
SCALE: 3/4"=1'-0"

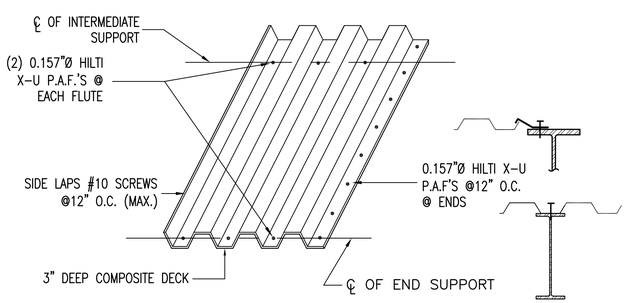

8 TYP. COMPOSITE DECK ATTACHMENT

12" 0' 1' 2' 3'
SCALE: 3/4"=1'-0"

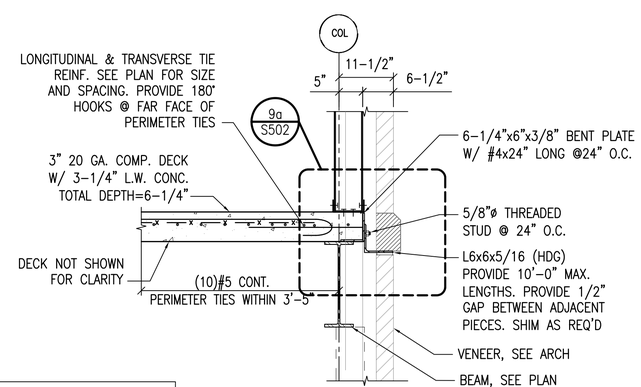

SEE PLANS FOR ADDITIONAL SLAB REINF. NOT SHOWN

9 EDGE OF EXTERIOR SLAB AT COMPOSITE BM

S110, S111, S120, S121
12" 0' 1' 2' 3'
SCALE: 3/4"=1'-0"

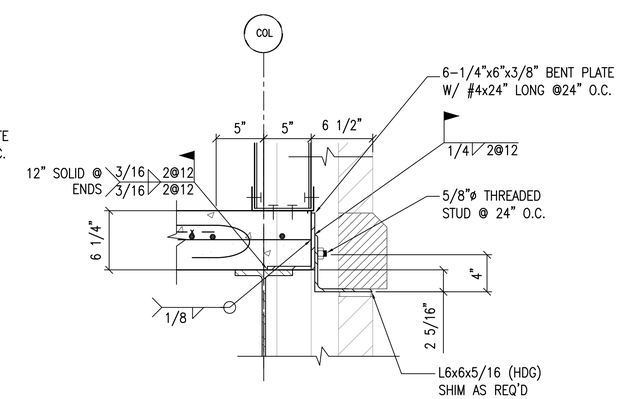

9a EDGE OF EXTERIOR SLAB AT COMPOSITE BM

S110, S111, S120, S121
8" 0' 8" 16"
SCALE: 1 1/2"=1'-0"

SCHMIDT CONSULTING · GROUP, INC.
FLORIDA LICENSE · NUMBER 05371
40 S Palafox Pl, Ste 300 · Pensacola, FL 32502
P: 850-438-0050 · F: 850-432-8631
STUART SMITH P.E.
FLORIDA LICENSE NUMBER 49738
SCG project: 2010-152

SYM	DESCRIPTION	DATE	APPR.

NAVFAC

ANDERSON DRACE JOINT VENTURE

STUART CHARLES SMITH LICENSE NO. 49738 STATE OF FLORIDA PROFESSIONAL ENGINEER SEAL

EGH ARCHITECTS eleyguildhardy.com A/E INFO

APPROVED

FOR COMMANDER NAVFAC

ACTIVITY

SATISFACTORY TO DATE JAN 17, 2012

DES SL DRW AJB CHK SCS

DEPARTMENT OF THE NAVY
NAVAL FACILITIES ENGINEERING COMMAND SOUTHEAST
IPT GULF COAST
NAVAL FACILITIES ENGINEERING COMMAND
NAVAL AIR STATION JACKSONVILLE, FL
CORRY STATION
PENSACOLA, FLORIDA
BUILDING P-724 Corry "A" School BEQ
REVISED [2+0] MODULE DESIGN
STEEL DETAILS

SCALE: AS INDICATED
EPROJECT NO.: 10-045
CONSTR. CONTR. NO. N69450-10-C-0755
NAVFAC DRAWING NO. 15050397
SHEET 52 OF 204
S502

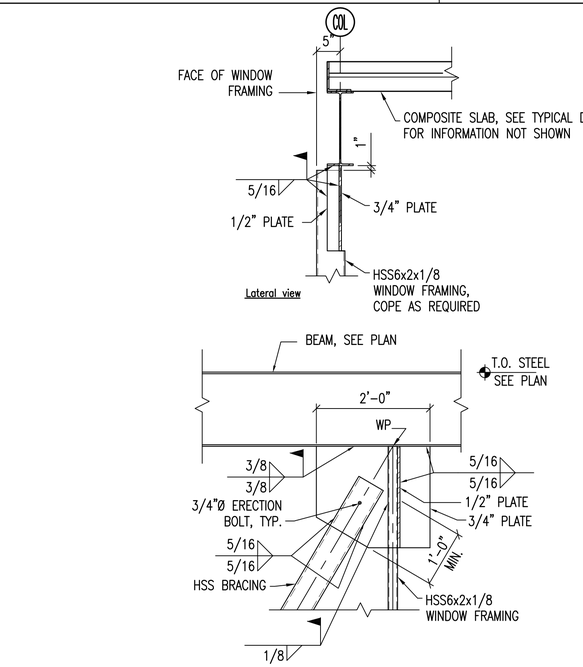

1 TYP. EXTERIOR BRACE CONN. (1ST & 2ND FLOOR)

S200, S201, S202, S203

SCALE: 3/4"=1'-0"

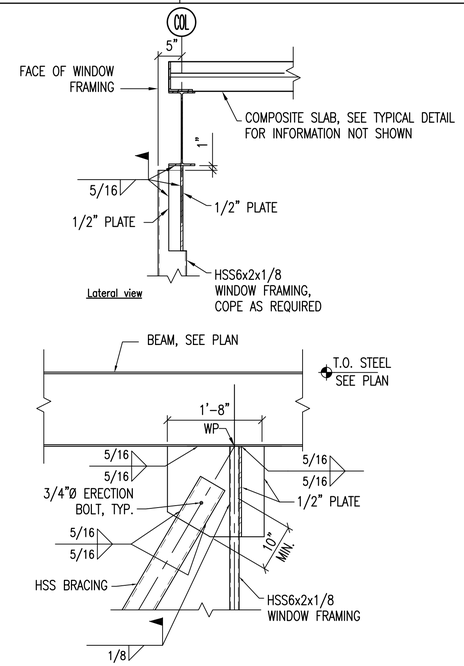

2 TYP. EXTERIOR BRACE CONN. (3RD & 4TH FLOOR)

S200, S201, S202, S203

SCALE: 3/4"=1'-0"

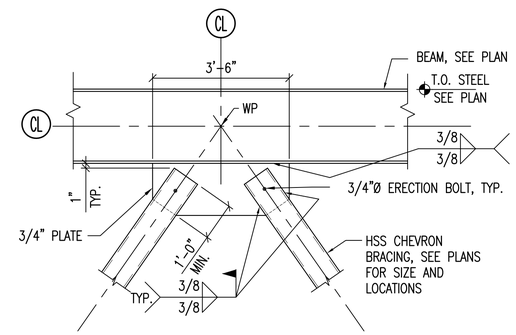

3 TYP. INTERIOR BRACING (1ST & 2ND FLOOR)

S200, S201, S202

SCALE: 3/4"=1'-0"

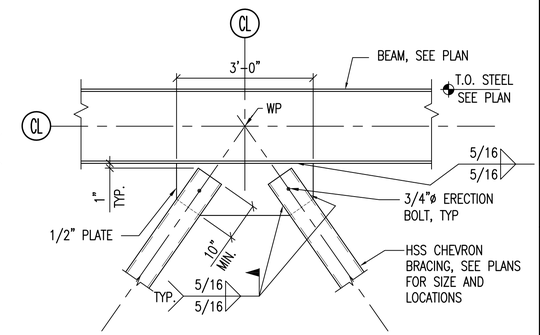

4 TYP. INTERIOR BRACING (3RD & 4TH FLOOR)

S200, S201, S202

SCALE: 3/4"=1'-0"

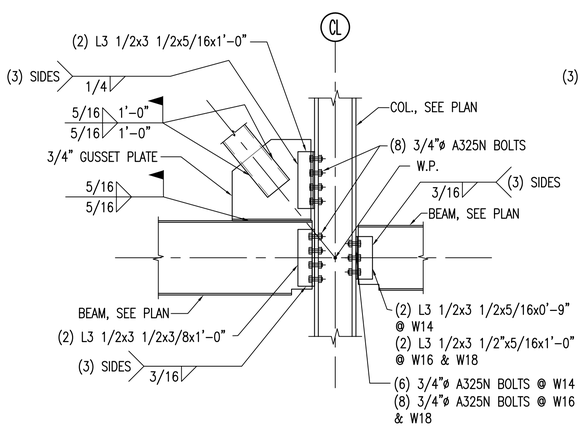

5 TYP. BRACE CONN. (2ND FLOOR)

S200, S201, S202, S203

SCALE: 3/4"=1'-0"

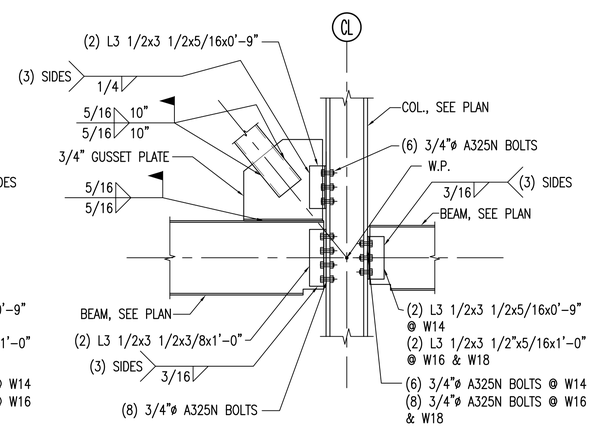

6 TYP. BRACE CONN. (3RD & 4TH FLOOR)

S200, S201, S202, S203

SCALE: 3/4"=1'-0"

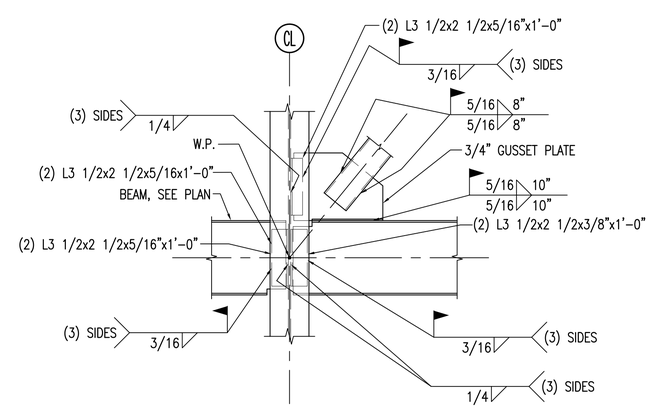

7 TYP. BRACE CONN.

S200, S201, S202

SCALE: 3/4"=1'-0"

8 NOT USED

SCALE: 3/4"=1'-0"

REMOVE ERECTION BOLT AFTER INSTALLATION

SCHMIDT CONSULTING · GROUP, INC.
FLORIDA LICENSE - NUMBER 05371
40 S Palafox Pl, Ste 300 - Pensacola, FL 32502
P: 850-438-0050 - F: 850-432-8631
STUART SMITH P.E.
FLORIDA LICENSE NUMBER 49738
SCG project: 2010-152

SYM	DESCRIPTION	DATE	APPR

NAVFAC

ANDERSON DRACE JOINT VENTURE

STUART CHARLES SMITH LICENSE NO. 49738 STATE OF FLORIDA PROFESSIONAL ENGINEER SEAL

EGH ARCHITECTS eleyguildhardy.com A/E INFO

APPROVED

FOR COMMANDER NAVFAC

ACTIVITY

SATISFACTORY TO DATE JAN 17, 2012

DES SL DRW AJB CHK SCS

DEPARTMENT OF THE NAVY
NAVAL FACILITIES ENGINEERING COMMAND SOUTHEAST
IPT GULF-COAST
CORRY STATION

NAVAL FACILITIES ENGINEERING COMMAND
NAVAL AIR STATION JACKSONVILLE, FL

PENSACOLA, FLORIDA

BUILDING P-724 Corry "A" School BEQ
REVISED [2+0] MODULE DESIGN

STEEL DETAILS

SCALE: AS INDICATED

EPROJECT NO.: 10-045

CONSTR. CONTR. NO. N69450-10-C-0755

NAVFAC DRAWING NO. 15050398

SHEET 53 OF 204

S503

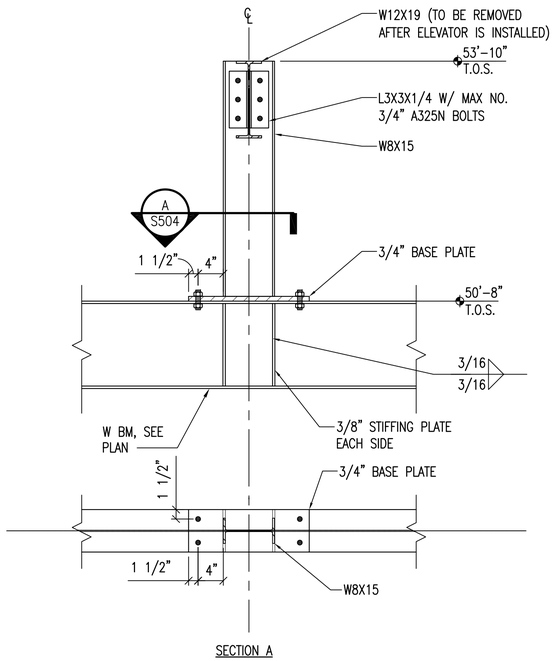

1 ELEVATOR BEAM DETAIL

S130
12" 0' 1' 2' 3'
SCALE: 3/4"=1'-0"

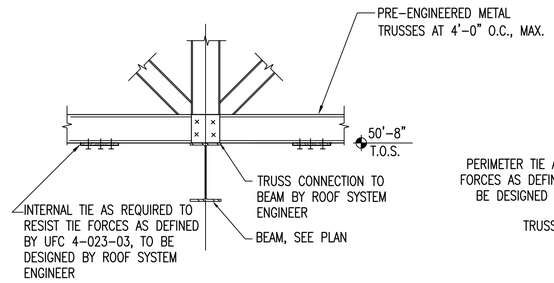

2 TRUSS TO INT. BEAM DETAIL

S130
12" 0' 1' 2' 3'
SCALE: 3/4"=1'-0"

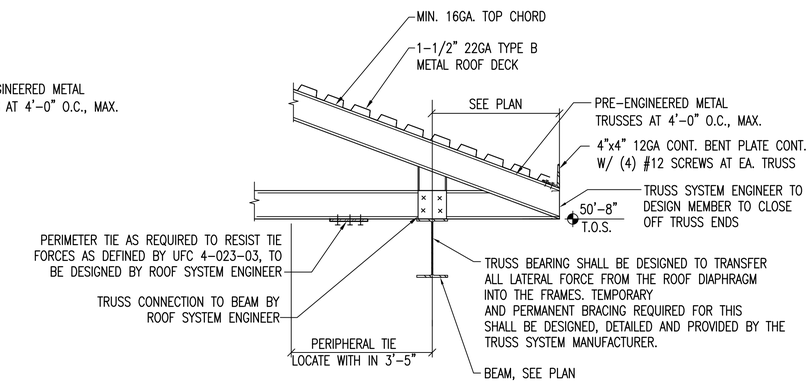

3 TRUSS TO EXT. BEAM DETAIL

S130
12" 0' 1' 2' 3'
SCALE: 3/4"=1'-0"

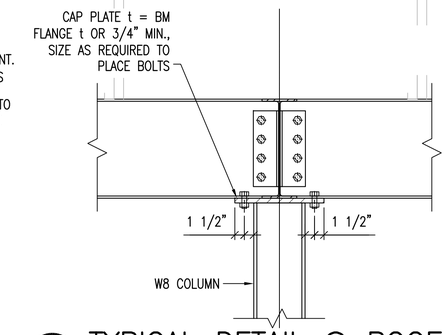

4 TYPICAL DETAIL @ ROOF

12" 0' 1' 2'
SCALE: 1"=1'-0"

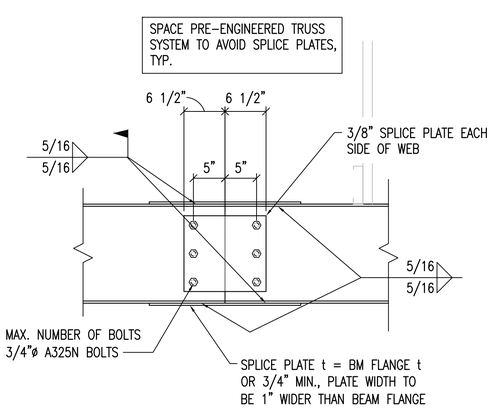

5 TYPICAL DETAIL @ ROOF

12" 0' 1' 2'
SCALE: 1"=1'-0"

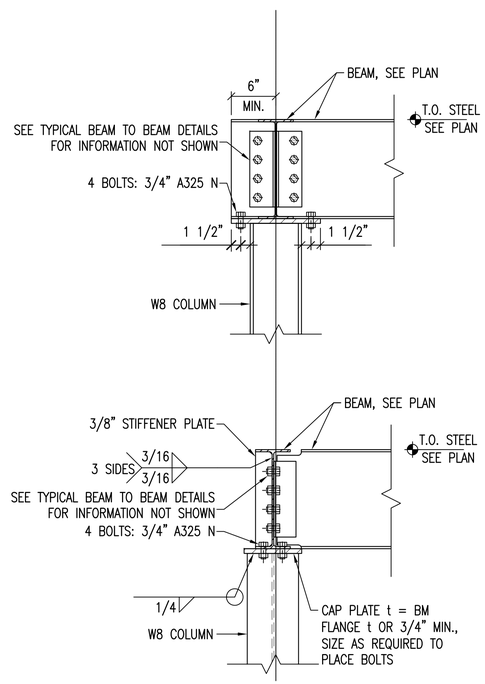

6 TYPICAL BEAM TO COL @ BUILDING CORNER

S130
12" 0' 1' 2'
SCALE: 1"=1'-0"

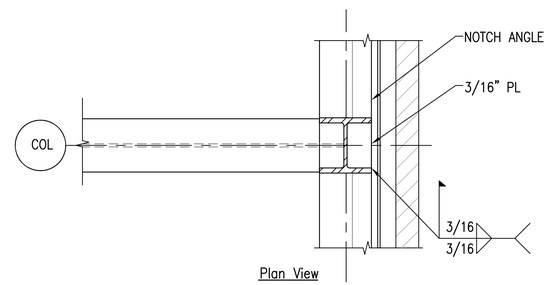

Plan View

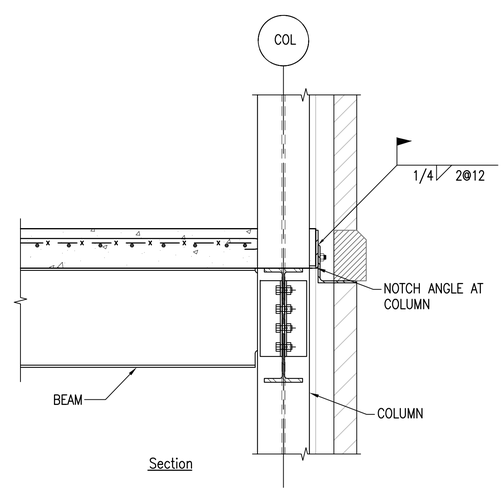

Section

7 SLAB EDGE AT COLUMN

S110, S111
12" 0' 1' 2'
SCALE: 1"=1'-0"

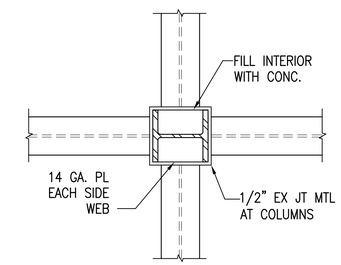

Plan View

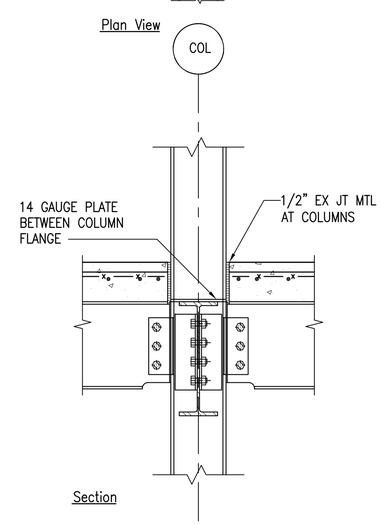

Section

8 COLUMN AT FLOOR

S110, S111
12" 0' 1' 2'
SCALE: 1"=1'-0"

SCHMIDT CONSULTING · GROUP, INC.
FLORIDA LICENSE - NUMBER 05371
40 S Palafox Pl, Ste 300 · Pensacola, FL 32502
P: 850-438-0050 · F: 850-432-8631
STUART SMITH P.E.
FLORIDA LICENSE NUMBER 49738
SCG project: 2010-152

SYM	DESCRIPTION	DATE	APPR

NAVFAC

ANDERSON DRACE JOINT VENTURE

STUART CHARLES SMITH LICENSE NO. 49738 STATE OF FLORIDA PROFESSIONAL ENGINEER SEAL

EGH ARCHITECTS eleyguildhardy.com A/E INFO

APPROVED

FOR COMMANDER NAVFAC

ACTIVITY

SATISFACTORY TO DATE JAN 17, 2012

DES SL DRW AJB CHK SCS

DEPARTMENT OF THE NAVY
NAVAL FACILITIES ENGINEERING COMMAND SOUTHEAST
NAVAL FACILITIES ENGINEERING COMMAND
NAVAL AIR STATION JACKSONVILLE, FL
IPT GULF-COAST
CORRY STATION
PENSACOLA, FLORIDA

BUILDING P-724 Corry "A" School BEQ
REVISED [2+0] MODULE DESIGN

STEEL DETAILS

SCALE: AS INDICATED

EPROJECT NO.: 10-045

CONSTR. CONTR. NO. N69450-10-C-0755

NAVFAC DRAWING NO. 15050399

SHEET 54 OF 204

S504

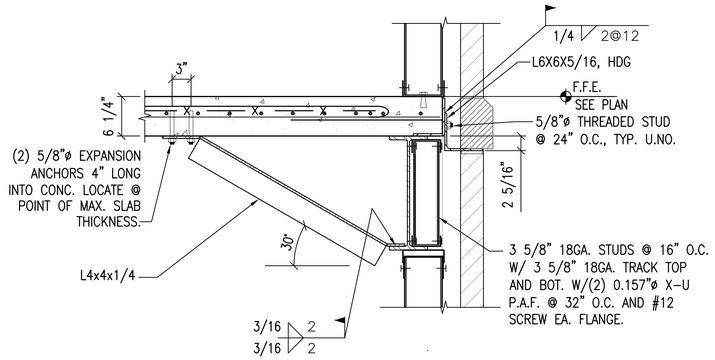

1 TYP. EDGE OF SLAB DETAIL

12" 0' 1' 2'
SCALE: 1"=1'-0"

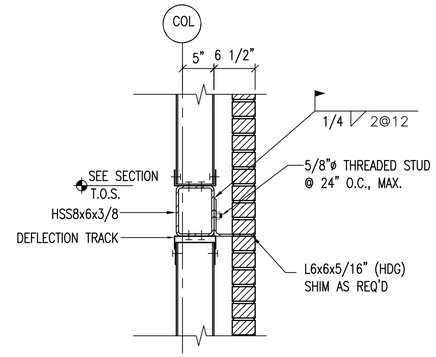

2 DETAIL AT STAIR TOWER

12" 0' 1' 2'
SCALE: 1"=1'-0"

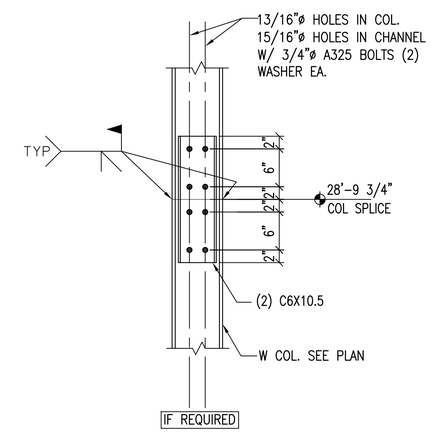

3 COLUMN SPLICE DETAIL

12" 0' 1' 2'
SCALE: 1"=1'-0"

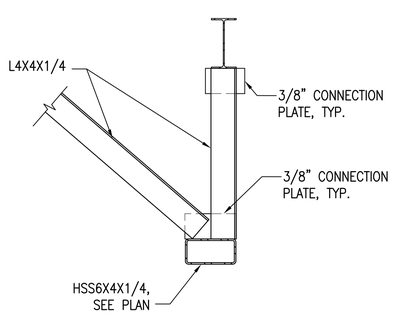

4a BRACING DETAIL

12" 0' 1' 2'
SCALE: 1"=1'-0"

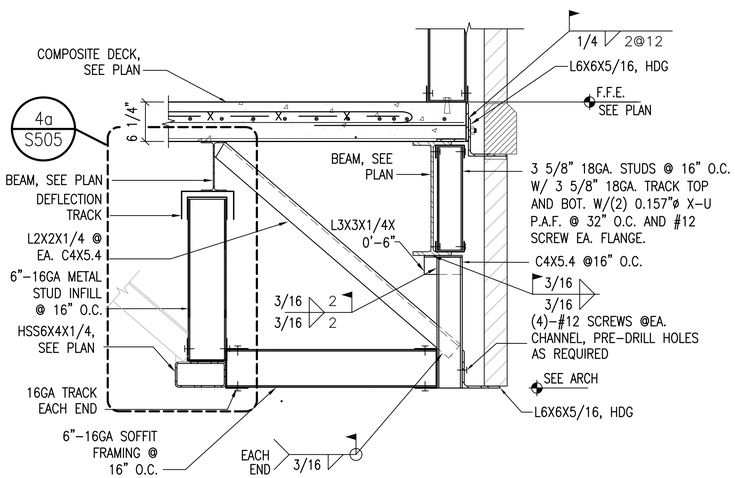

4 EDGE OF SLAB DETAIL

12" 0' 1' 2'
SCALE: 1"=1'-0"

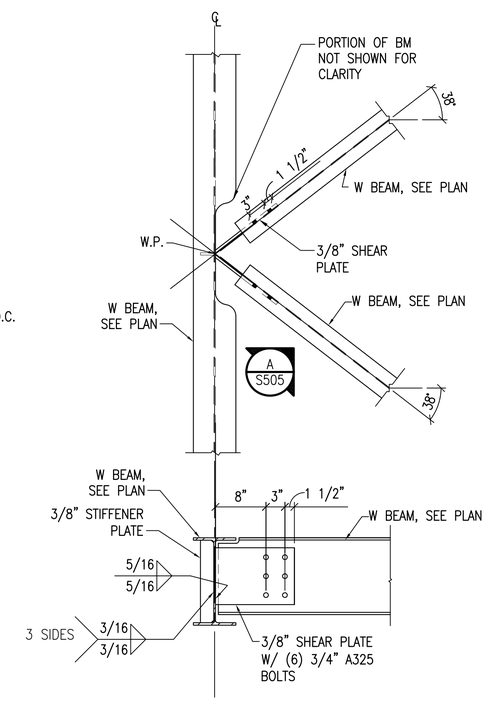

DETAIL A

5 BEAM BRACING DETAIL

S110
12" 0' 1' 2'
SCALE: 1"=1'-0"

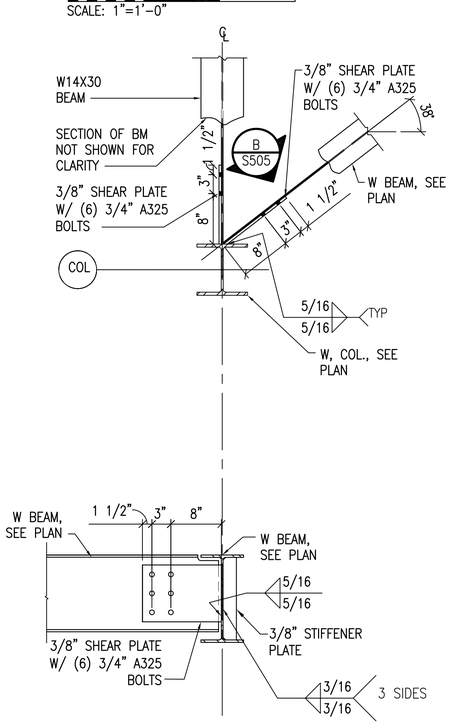

DETAIL B

6 CORNER BRACING DETAIL

S110
12" 0' 1' 2'
SCALE: 1"=1'-0"

SCHMIDT CONSULTING GROUP, INC.
FLORIDA LICENSE - NUMBER 05371
40 S Palafox Pl, Ste 300 - Pensacola, FL 32502
P: 850-438-0050 - F: 850-432-8631
STUART SMITH P.E.
FLORIDA LICENSE NUMBER 49738
SCG project: 2010-152

SYM	DESCRIPTION	DATE	APPR

NAVFAC

ANDERSON DRACE JOINT VENTURE

STUART CHARLES SMITH LICENSE NO. 49738 STATE OF FLORIDA PROFESSIONAL ENGINEER SEAL

EGH ARCHITECTS
eleyguildhardy.com
A/E INFO

APPROVED
FOR COMMANDER NAVFAC
ACTIVITY
SATISFACTORY TO DATE JAN 17, 2012
DES SL DRW AJB CHK SCS

NAVAL FACILITIES ENGINEERING COMMAND
DEPARTMENT OF THE NAVY
NAVAL FACILITIES ENGINEERING COMMAND SOUTHEAST
NAVAL AIR STATION JACKSONVILLE, FL
(PT GULF-COAST)
CORRY STATION
PENSACOLA, FLORIDA
BUILDING P-724 Corry "A" School BEQ
REVISED [2+0] MODULE DESIGN
STEEL DETAILS

SCALE: AS INDICATED
EPROJECT NO.: 10-045
CONSTR. CONTR. NO. N69450-10-C-0755
NAVFAC DRAWING NO. 15050400
SHEET 55 OF 204
S505

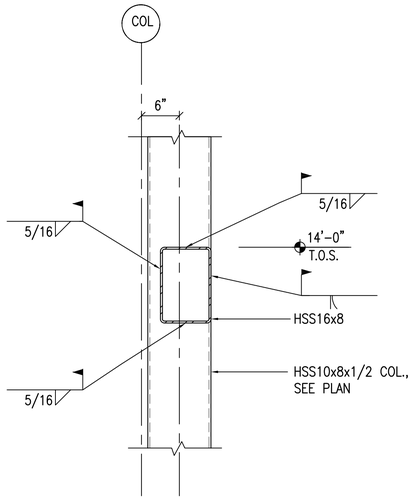

1 TYPICAL CONNECTION DETAIL

SCALE: 1"=1'-0"

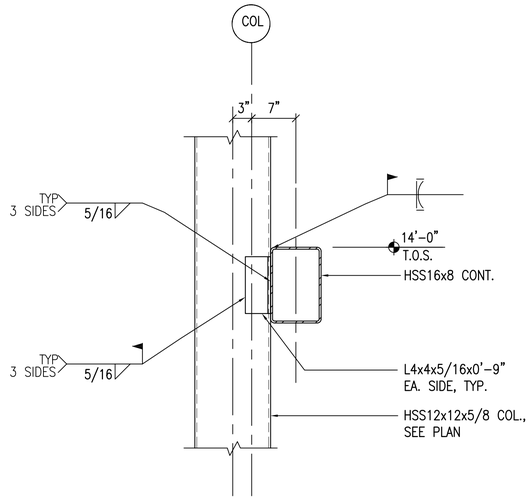

2 TYPICAL CONNECTION DETAIL

SCALE: 1"=1'-0"

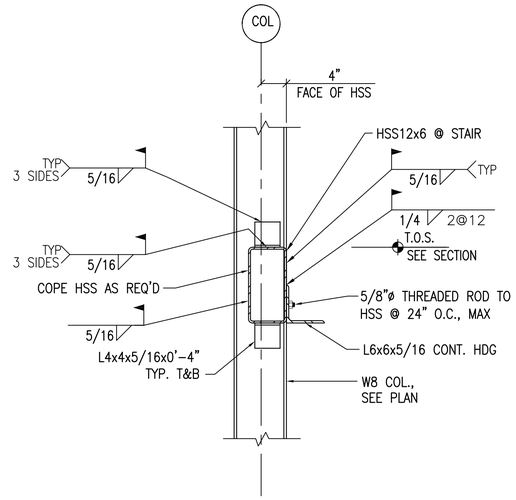

3 TYPICAL CONNECTION DETAIL

SCALE: 1"=1'-0"

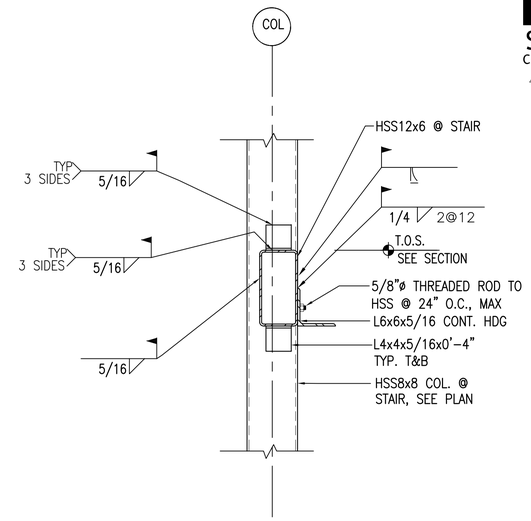

4 TYPICAL HSS CONNECTION @ STAIR

SCALE: 1"=1'-0"

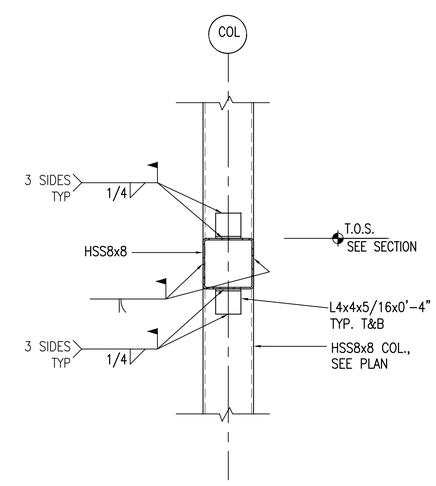

5 TYPICAL CONNECTION DETAIL

SCALE: 1"=1'-0"

SCHMIDT CONSULTING · GROUP, INC.
FLORIDA LICENSE - NUMBER 05371
40 S Palafox Pl, Ste 300 · Pensacola, FL 32502
P: 850-438-0050 · F: 850-432-8631
STUART SMITH P.E.
FLORIDA LICENSE NUMBER 49738
SCG project: 2010-152

SYM	DESCRIPTION	DATE	APPR

NAVFAC

ANDERSON DRACE JOINT VENTURE

STUART CHARLES SMITH LICENSE NO. 49738 STATE OF FLORIDA PROFESSIONAL ENGINEER SEAL

EGH ARCHITECTS
eleyguildhardy.com
A/E INFO

APPROVED

FOR COMMANDER NAVFAC

ACTIVITY

SATISFACTORY TO DATE JAN 17, 2012

DES SL | DRW AJB | CHK SCS

DEPARTMENT OF THE NAVY
NAVAL FACILITIES ENGINEERING COMMAND SOUTHEAST
(PT GULF COAST)
NAVAL FACILITIES ENGINEERING COMMAND
NAVAL AIR STATION JACKSONVILLE, FL.
CORRY STATION
PENSACOLA, FLORIDA

BUILDING P-724 Corry "A" School BEQ
REVISED [2+0] MODULE DESIGN

STEEL DETAILS

SCALE: AS INDICATED

EPROJECT NO.: 10-045

CONSTR. CONTR. NO.
N69450-10-C-0755

NAVFAC DRAWING NO.
15050401

SHEET 56 OF 204

S506

1 NOT USED

8" 0' 8" 16"

SCALE: 1 1/2"=1'-0"

2 NOT USED

8" 0' 8" 16"

SCALE: 1 1/2"=1'-0"

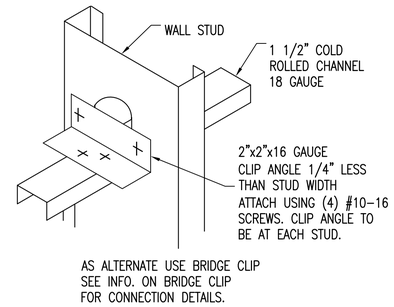

3 LATERAL BRACING

BRACING USING SCREW ATTACHED CLIP

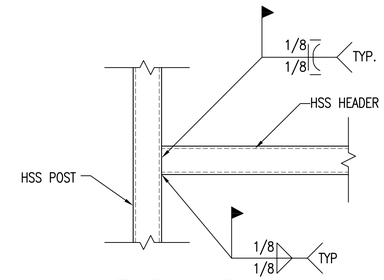

4 HEAD AND SILL CONNECTION

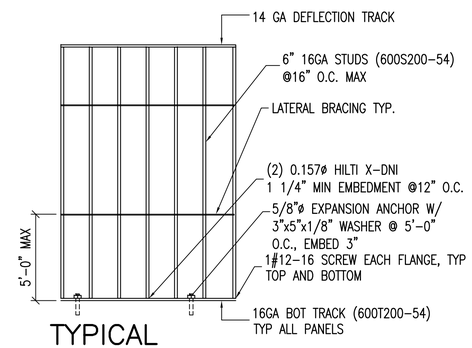

5 TYPICAL WALL ELEVATION

BRACING USING SCREW ATTACHED CLIP

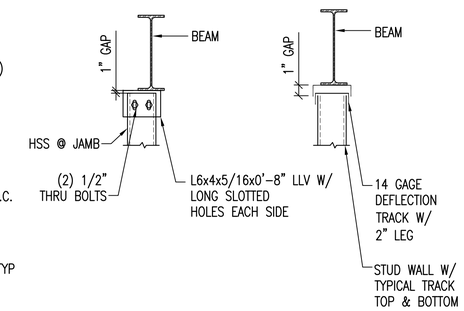

6 TYPICAL BEAM CONNECTION

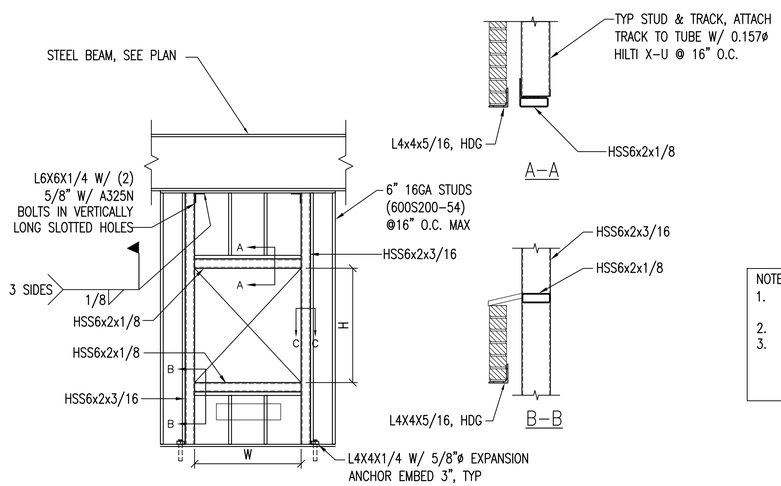

7 WALL ELEVATION AT WINDOW

MAX. WIDTH = 5'-4"

NOTE:
1. FOR ALL LINTEL ANGLES, PROVIDE MIN. 8" BEARING EA. SIDE OF OPENING
2. BLAST FRAMES ONLY TO BE LOCATED AT GLAZED OPENINGS
3. ALL STRUCTURAL STEEL EXPOSED TO WEATHER, INCLUDING LINTELS SHALL BE HOT DIP GALVANIZED AFTER FABRICATION. WHERE REQUIRED, COLD GALVANIZE PAINT FOR ALL TOUCH-UP LOCATIONS, INCLUDING WELDS.

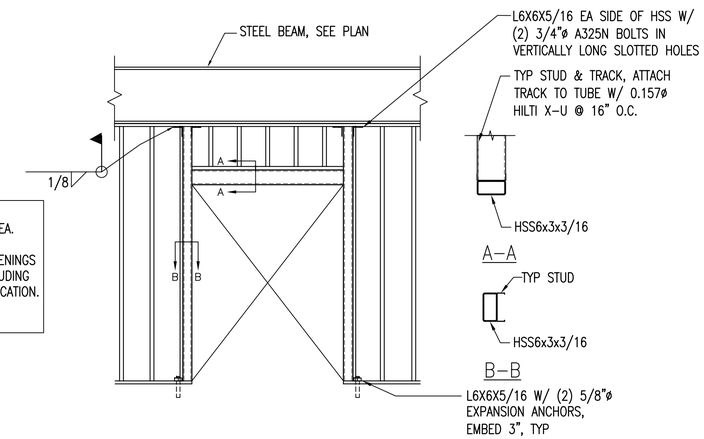

8 WALL ELEVATION AT DOOR

MAX WIDTH 6'-0"

SCHMIDT CONSULTING · GROUP, INC.
FLORIDA LICENSE - NUMBER 05371
40 S Palafox Pl, Ste 300 · Pensacola, FL 32502
P: 850-438-0050 · F: 850-432-8631
STUART SMITH P.E.
FLORIDA LICENSE NUMBER 49738
SCG project: 2010-152

SYM	DESCRIPTION	DATE	APPR

NAVFAC

ANDERSON DRACE JOINT VENTURE

STUART CHARLES SMITH LICENSE NO. 49738 STATE OF FLORIDA PROFESSIONAL ENGINEER SEAL

EGH ARCHITECTS eleyguildhardy.com A/E INFO

APPROVED

FOR COMMANDER NAVFAC

ACTIVITY

SATISFACTORY TO DATE JAN 17, 2012

DES SL | DRW AJB | CHK SCS

DEPARTMENT OF THE NAVY
NAVAL FACILITIES ENGINEERING COMMAND SOUTHEAST
(PT GULF-FCO/NST)
NAVAL FACILITIES ENGINEERING COMMAND
NAVAL AIR STATION JACKSONVILLE, FL
CORRY STATION
PENSACOLA, FLORIDA

BUILDING P-724 Corry "A" School BEQ
REVISED [2+0] MODULE DESIGN

LIGHT GAGE STUD DETAILS

SCALE: AS INDICATED

EPROJECT NO.: 10-045

CONSTR. CONTR. NO. N69450-10-C-0755

NAVFAC DRAWING NO. 15050402

SHEET 57 OF 204

S600

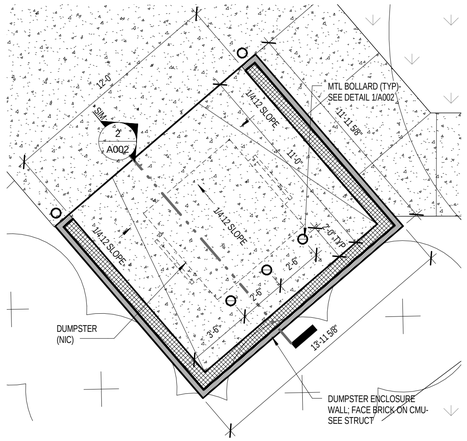

2 A001|A001 ENLARGED PLAN- DUMPSTER ENCLOSURE 2
1/4" = 1'-0"

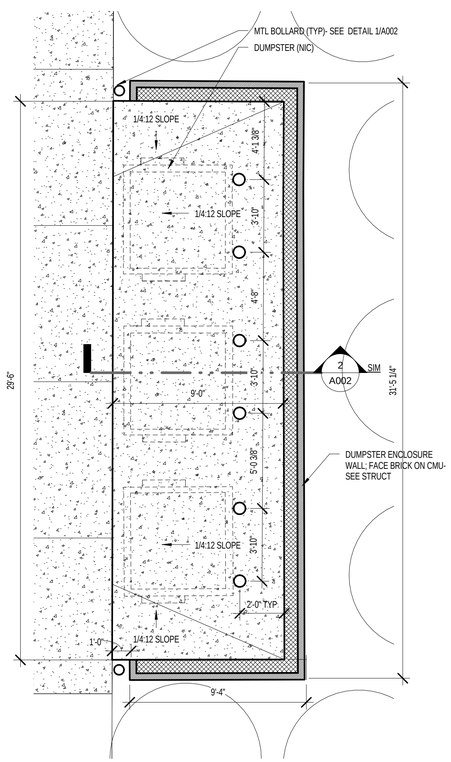

3 A001|A001 ENLARGED PLAN- DUMPSTER ENCLOSURE 1
1/4" = 1'-0"

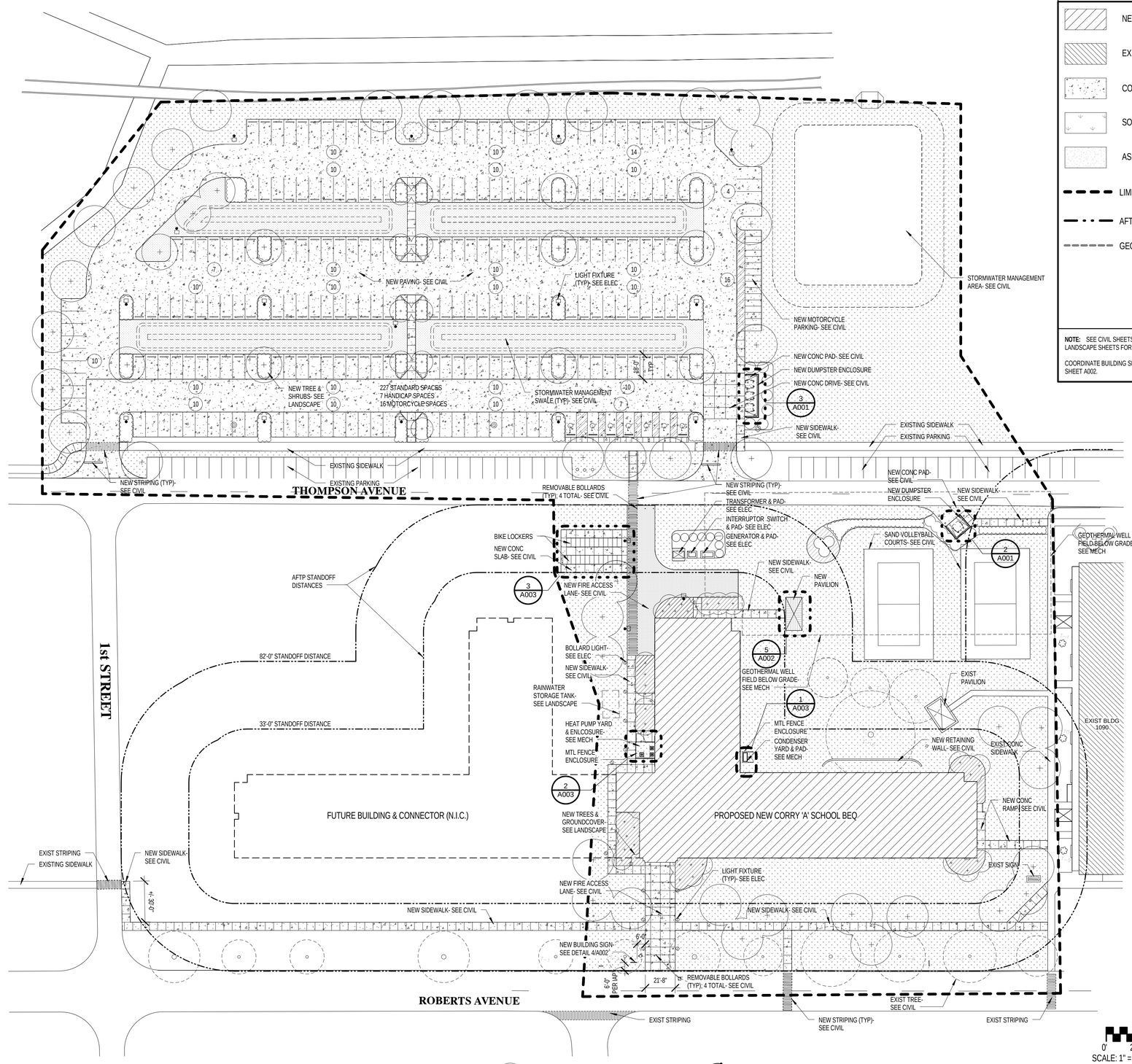

1 A001 ARCHITECTURAL SITE PLAN
1" = 40'-0"

0' 20' 40' 60' 120'
SCALE: 1" = 40'-0"

0' 2' 4' 8' 16'
SCALE: 1/4" = 1'- 0"

SITE PLAN LEGEND

- NEW BUILDING CONSTRUCTION
- EXISTING BUILDING
- CONCRETE PAVING
- SOD
- ASPHALT PAVING
- LIMITS OF WORK- SEE CIVIL
- AFTP SETBACK- SEE CIVIL
- GEOTHERMAL WELL FIELD- SEE MECH

NOTE: SEE CIVIL SHEETS FOR TREES TO BE REMOVED. SEE CIVIL & LANDSCAPE SHEETS FOR ADDITIONAL INFORMATION.

COORDINATE BUILDING SIGNAGE WITH USERS & BASE- SEE DETAIL ON SHEET A002.

SYM	DESCRIPTION	DATE	APPR

NAVFAC

ANDERSON DRACE JOINT VENTURE

REGISTERED ARCHITECT Mark E. Lisher 2769 Biloxi, MS STATE OF MISSISSIPPI 1-17-12 SEAL

EGH ARCHITECTS eleyguildhardy.com A/E INFO

APPROVED

FOR COMMANDER NAVFAC

ACTIVITY

SATISFACTORY TO DATE JAN 19, 2012

DES PCW | DRW PCW | CHK KLK

DEPARTMENT OF THE NAVY
NAVAL FACILITIES ENGINEERING COMMAND
PT GULFCOAST
CORRY STATION

NAVAL FACILITIES ENGINEERING COMMAND SOUTHEAST
NAVAL AIR STATION, JACKSONVILLE, FL
PENSACOLA, FLORIDA

BUILDING P-724 Corry "A" School BEQ
REVISED [2+0] MODULE DESIGN

ARCHITECTURAL SITE PLAN

SCALE: AS INDICATED

EPROJECT NO.: 10-045

CONSTR. CONTR. NO.
N69450-10-C-0755

NAVFAC DRAWING NO.
15050403

SHEET 58 OF 204

A001

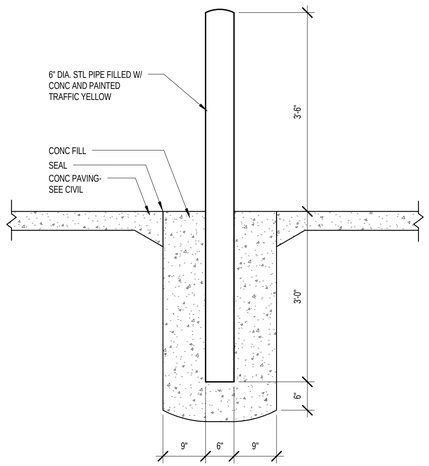

1 A002 BOLLARD DETAIL (TYP)
3/4" = 1'-0"

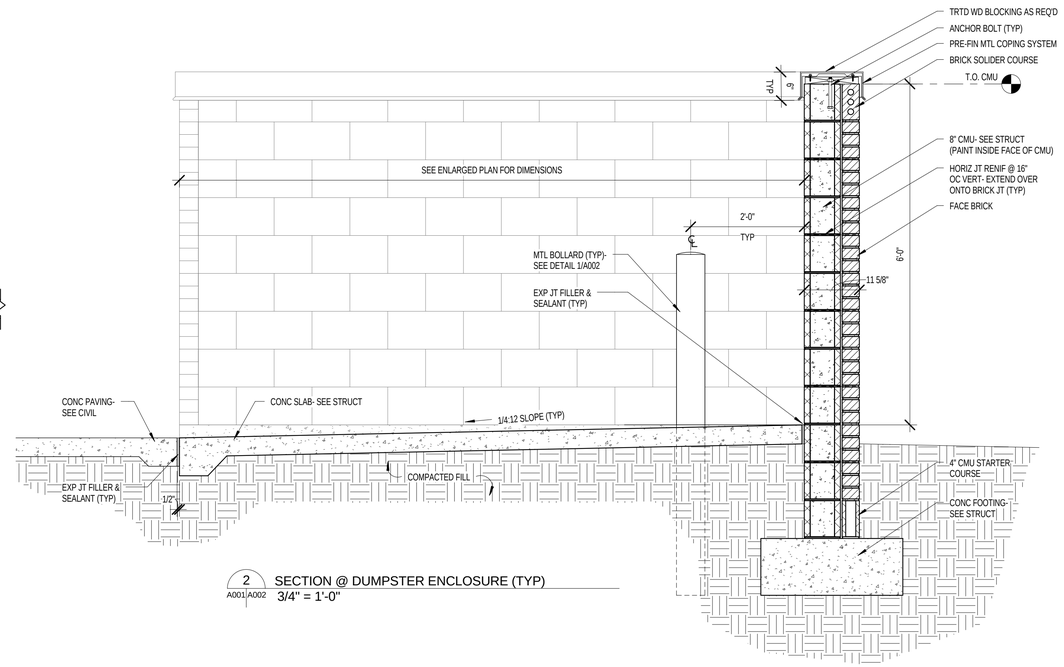

2 A001 A002 SECTION @ DUMPSTER ENCLOSURE (TYP)
3/4" = 1'-0"

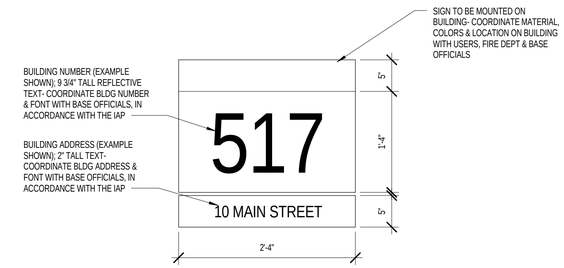

3 A002 BUILDING SIGNAGE
1" = 1'-0"

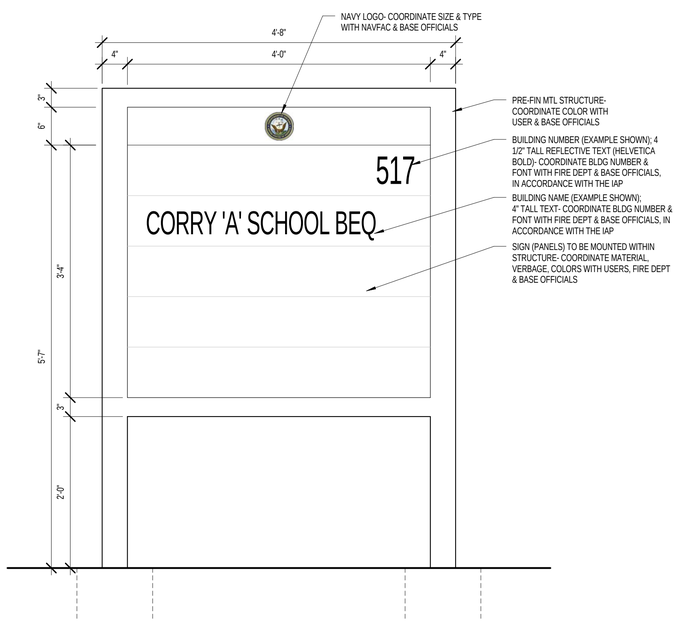

4 A002 BUILDING SIGN- FREESTANDING INDENTIFICATION SIGN (TYPE B)
1" = 1'-0"

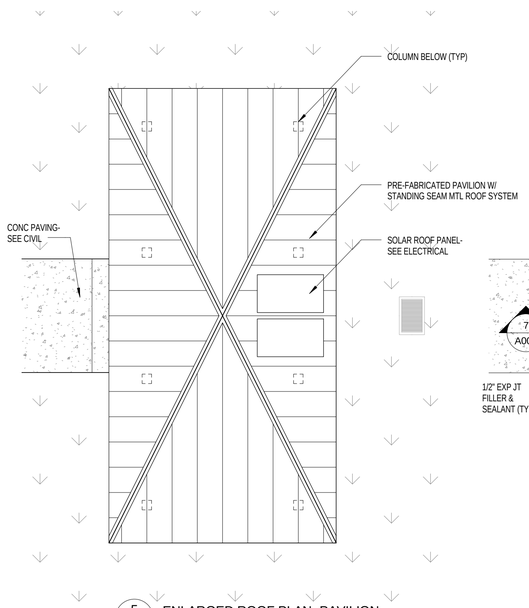

5 A001 A002 ENLARGED ROOF PLAN- PAVILION
1/4" = 1'-0"

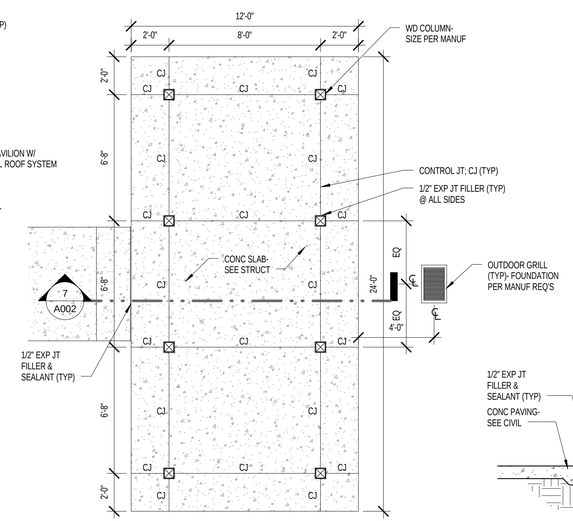

6 A002 FLOOR PLAN- PAVILION
1/4" = 1'-0"

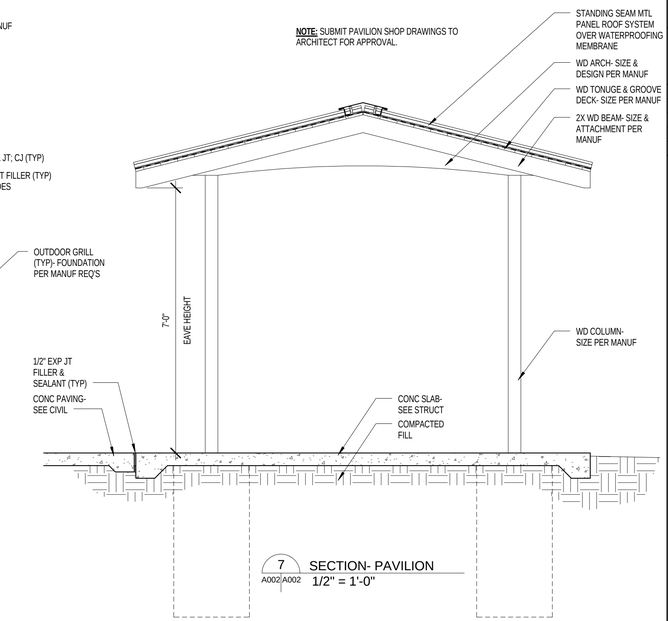

7 A002 A002 SECTION- PAVILION
1/2" = 1'-0"

0' 2' 4' 8' 16'
SCALE: 1/4" = 1'- 0"

0' 1' 2' 4'
SCALE: 3/4" = 1'-0"

0' 1' 2' 4'
SCALE: 1/2" = 1'-0"

0' 1' 2' 3'
SCALE: 1" = 1'-0"

SYM	DESCRIPTION	DATE	APPR

NAVFAC

ANDERSON DRACE JOINT VENTURE

REGISTERED ARCHITECT Mark E. Lisher 2769 Biloxi, MS STATE OF MISSISSIPPI
1-17-12
SEAL

EGH ARCHITECTS
eleyguildhardy.com
A/E INFO

APPROVED
FOR COMMANDER NAVFAC
ACTIVITY
SATISFACTORY TO DATE JAN 19, 2012
DES PCW DRW PCW CHK KLK

DEPARTMENT OF THE NAVY
NAVAL FACILITIES ENGINEERING COMMAND
IPT GULF-COAST
CORRY STATION

NAVAL FACILITIES ENGINEERING COMMAND SOUTHEAST
NAVAL AIR STATION JACKSONVILLE, FL
PENSACOLA, FLORIDA

BUILDING P-724 Corry "A" School BEQ
REVISED [2+0] MODULE DESIGN

SITE DETAILS

SCALE: AS INDICATED
EPROJECT NO.: 10-045
CONSTR. CONTR. NO. N69450-10-C-0755
NAVFAC DRAWING NO. 15050404
SHEET 59 OF 204

A002

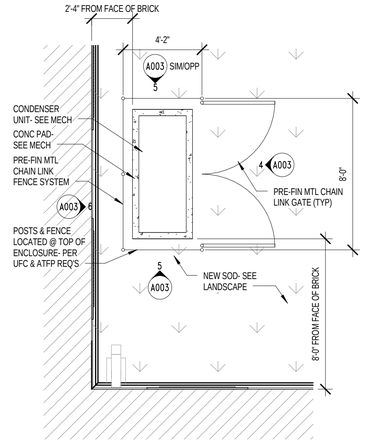

1 A001/A003 ENLARGED PLAN- CONDENSER UNIT
1/4" = 1'-0"

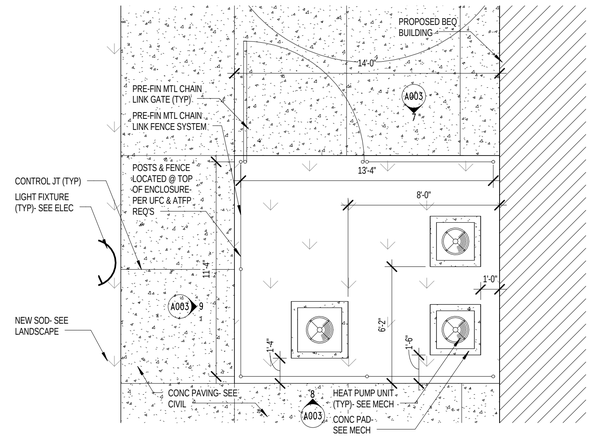

2 A001/A003 ENLARGED PLAN- HEAT PUMP ENCLOSURE
1/4" = 1'-0"

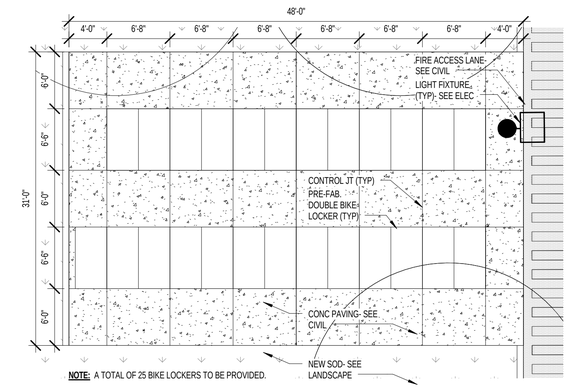

3 A001/A003 ENLARGED PLAN- BIKE LOCKERS
1/8" = 1'-0"

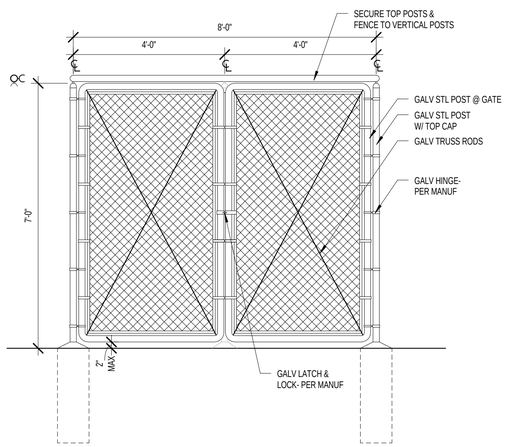

4 A003/A003 ELEVATION- CONDENSER UNIT GATES
1/2" = 1'-0"

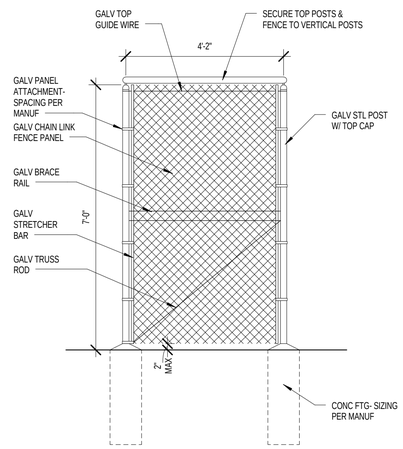

5 A003/A003 ELEVATION- SIDE CONDENSER ENCLOSURE
1/2" = 1'-0"

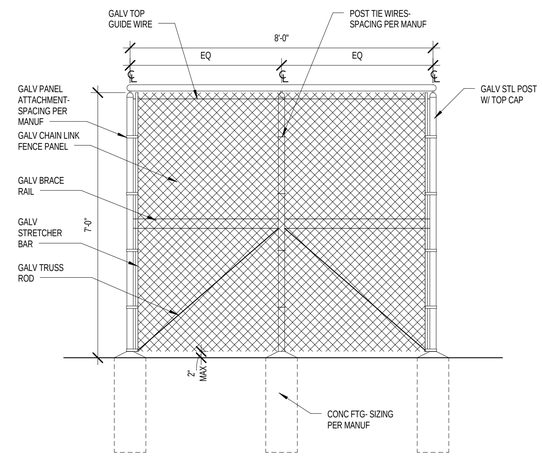

6 A003/A003 ELEVATION- CONDENSER UNIT OPP OF GATES
1/2" = 1'-0"

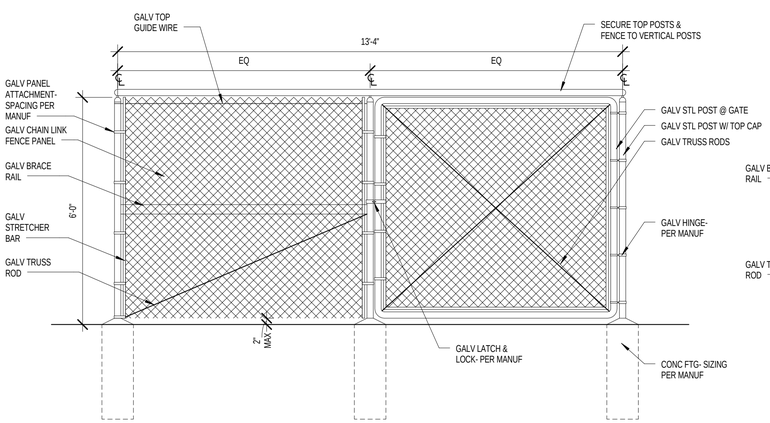

7 A003/A003 ELEVATION- HEAT PUMP ENCLOSURE GATE
1/2" = 1'-0"

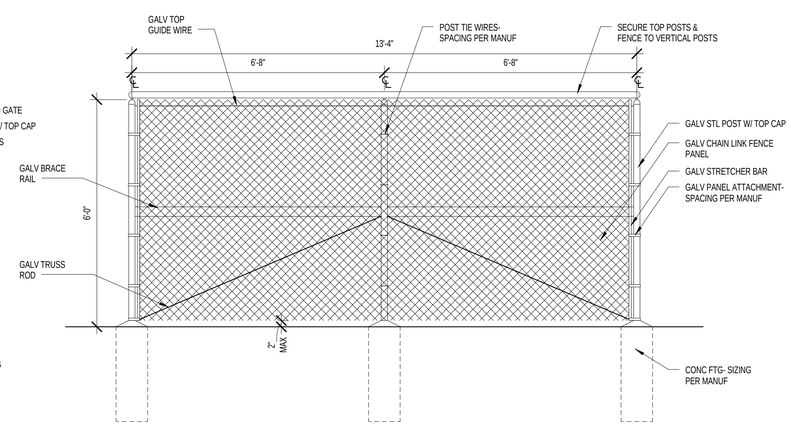

8 A003/A003 ELEVATION- HEAT PUMP ENCLOSURE SOUTH
1/2" = 1'-0"

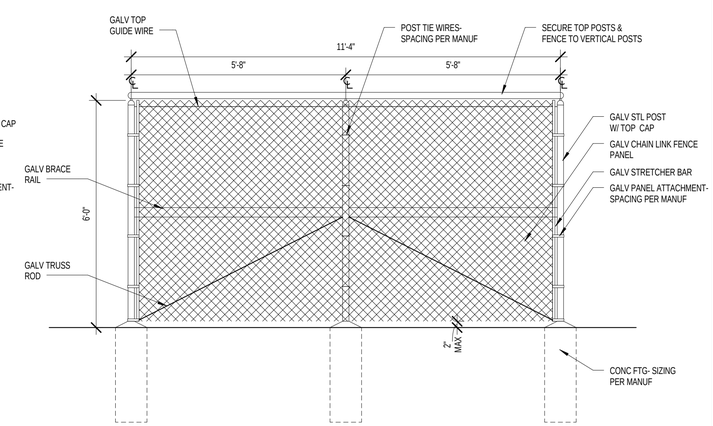

9 A003/A003 ELEVATION- HEAT PUMP ENCLOSURE SIDE
1/2" = 1'-0"

0' 4' 8' 16' 32'
SCALE: 1/8" = 1'-0"

0' 2' 4' 8' 16'
SCALE: 1/4" = 1'- 0"

0' 1' 2' 4'
SCALE: 1/2" = 1'-0"

SYM	DESCRIPTION	DATE	APPR

NAVFAC

ANDERSON DRACE
JOINT VENTURE

REGISTERED ARCHITECT
Mark E Lishen
2769
Biloxi, MS
STATE OF MISSISSIPPI
1-19-12
SEAL

EGH ARCHITECTS
eleyguildhardy.com
A/E INFO

APPROVED

FOR COMMANDER NAVFAC
ACTIVITY

SATISFACTORY TO DATE JAN 19, 2012

DES PDW | DRW PDW | CHK KLK

DEPARTMENT OF THE NAVY
NAVAL FACILITIES ENGINEERING COMMAND
IPT GULF.COAST

NAVAL FACILITIES ENGINEERING COMMAND SOUTHEAST
NAVAL AIR STATION JACKSONVILLE, FL
CORRY STATION
PENSACOLA, FLORIDA

BUILDING P-724 Corry "A" School BEQ
REVISED [2+0] MODULE DESIGN

SITE DETAILS

SCALE: AS INDICATED
EPROJECT NO.: 10-045
CONSTR. CONTR. NO.
N69450-10-C-0755
NAVFAC DRAWING NO.
15050405
SHEET 60 OF 204
A003

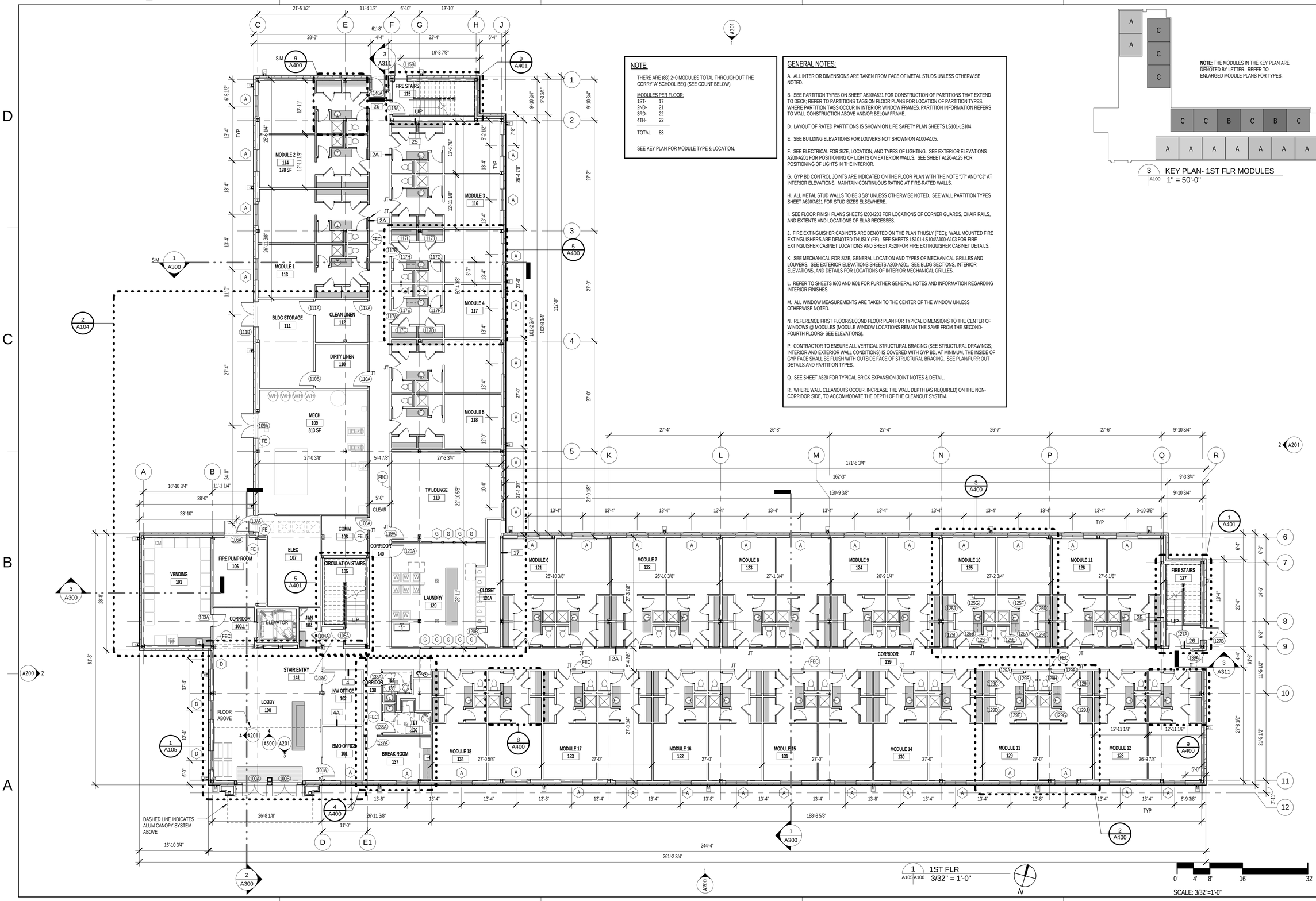

NOTE:

THERE ARE (83) 2+0 MODULES TOTAL THROUGHOUT THE CORRY 'A' SCHOOL BEQ (SEE COUNT BELOW).

MODULES PER FLOOR:

1ST-	17
2ND-	21
3RD-	22
4TH-	22
TOTAL	83

SEE KEY PLAN FOR MODULE TYPE & LOCATION.

GENERAL NOTES:

A. ALL INTERIOR DIMENSIONS ARE TAKEN FROM FACE OF METAL STUDS UNLESS OTHERWISE NOTED.

B. SEE PARTITION TYPES ON SHEET A620/A621 FOR CONSTRUCTION OF PARTITIONS THAT EXTEND TO DECK; REFER TO PARTITIONS TAGS ON FLOOR PLANS FOR LOCATION OF PARTITION TYPES. WHERE PARTITION TAGS OCCUR IN INTERIOR WINDOW FRAMES, PARTITION INFORMATION REFERS TO WALL CONSTRUCTION ABOVE AND/OR BELOW FRAME.

D. LAYOUT OF RATED PARTITIONS IS SHOWN ON LIFE SAFETY PLAN SHEETS LS101-LS104.

E. SEE BUILDING ELEVATIONS FOR LOUVERS NOT SHOWN ON A100-A105.

F. SEE ELECTRICAL FOR SIZE, LOCATION, AND TYPES OF LIGHTING. SEE EXTERIOR ELEVATIONS A200-A201 FOR POSITIONING OF LIGHTS ON EXTERIOR WALLS. SEE SHEET A120-A125 FOR POSITIONING OF LIGHTS IN THE INTERIOR.

G. GYP BD CONTROL JOINTS ARE INDICATED ON THE FLOOR PLAN WITH THE NOTE "JT" AND "CJ" AT INTERIOR ELEVATIONS. MAINTAIN CONTINUOUS RATING AT FIRE-RATED WALLS.

H. ALL METAL STUD WALLS TO BE 3 5/8" UNLESS OTHERWISE NOTED. SEE WALL PARTITION TYPES SHEET A620/A621 FOR STUD SIZES ELSEWHERE.

I. SEE FLOOR FINISH PLANS SHEETS I200-I203 FOR LOCATIONS OF CORNER GUARDS, CHAIR RAILS, AND EXTENTS AND LOCATIONS OF SLAB RECESSES.

J. FIRE EXTINGUISHER CABINETS ARE DENOTED ON THE PLAN THUSLY (FEC); WALL MOUNTED FIRE EXTINGUISHERS ARE DENOTED THUSLY (FE). SEE SHEETS LS101-LS104/A100-A103 FOR FIRE EXTINGUISHER CABINET LOCATIONS AND SHEET A520 FOR FIRE EXTINGUISHER CABINET DETAILS.

K. SEE MECHANICAL FOR SIZE, GENERAL LOCATION AND TYPES OF MECHANICAL GRILLES AND LOUVERS. SEE EXTERIOR ELEVATIONS SHEETS A200-A201. SEE BLDG SECTIONS, INTERIOR ELEVATIONS, AND DETAILS FOR LOCATIONS OF INTERIOR MECHANICAL GRILLES.

L. REFER TO SHEETS I600 AND I601 FOR FURTHER GENERAL NOTES AND INFORMATION REGARDING INTERIOR FINISHES.

M. ALL WINDOW MEASUREMENTS ARE TAKEN TO THE CENTER OF THE WINDOW UNLESS OTHERWISE NOTED.

N. REFERENCE FIRST FLOOR/SECOND FLOOR PLAN FOR TYPICAL DIMENSIONS TO THE CENTER OF WINDOWS @ MODULES (MODULE WINDOW LOCATIONS REMAIN THE SAME FROM THE SECOND-FOURTH FLOORS- SEE ELEVATIONS).

P. CONTRACTOR TO ENSURE ALL VERTICAL STRUCTURAL BRACING (SEE STRUCTURAL DRAWINGS; INTERIOR AND EXTERIOR WALL CONDITIONS) IS COVERED WITH GYP BD, AT MINIMUM, THE INSIDE OF GYP FACE SHALL BE FLUSH WITH OUTSIDE FACE OF STRUCTURAL BRACING. SEE PLAN/FURR OUT DETAILS AND PARTITION TYPES.

Q. SEE SHEET A520 FOR TYPICAL BRICK EXPANSION JOINT NOTES & DETAIL.

R. WHERE WALL CLEANOUTS OCCUR, INCREASE THE WALL DEPTH (AS REQUIRED) ON THE NON-CORRIDOR SIDE, TO ACCOMMODATE THE DEPTH OF THE CLEANOUT SYSTEM.

3 A100 KEY PLAN- 1ST FLR MODULES
1" = 50'-0"

SYM	DESCRIPTION	DATE	APPR.

NAVFAC

ANDERSON DRACE JOINT VENTURE

REGISTERED ARCHITECT Mark E. Lisher 2769 Biloxi, MS STATE OF MISSISSIPPI 1-17-12 SEAL

EGH ARCHITECTS eleyguildhardy.com A/E INFO

APPROVED

FOR COMMANDER NAVFAC

ACTIVITY

SATISFACTORY TO DATE JAN 19, 2012

DES PCW DRW PCW CHK KLK

DEPARTMENT OF THE NAVY
NAVAL FACILITIES ENGINEERING COMMAND SOUTHEAST
1P7 GULFCOAST
CORRY STATION

NAVAL FACILITIES ENGINEERING COMMAND
NAVAL AIR STATION, JACKSONVILLE, FL
PENSACOLA, FLORIDA

BUILDING P-724 Corry "A" School BEQ
REVISED [2+0] MODULE DESIGN

1ST FLOOR PLAN

SCALE: AS INDICATED

EPROJECT NO.: 10-045

CONSTR. CONTR. NO. N69450-10-C-0755

NAVFAC DRAWING NO. 15050406

SHEET 61 OF 204

A100

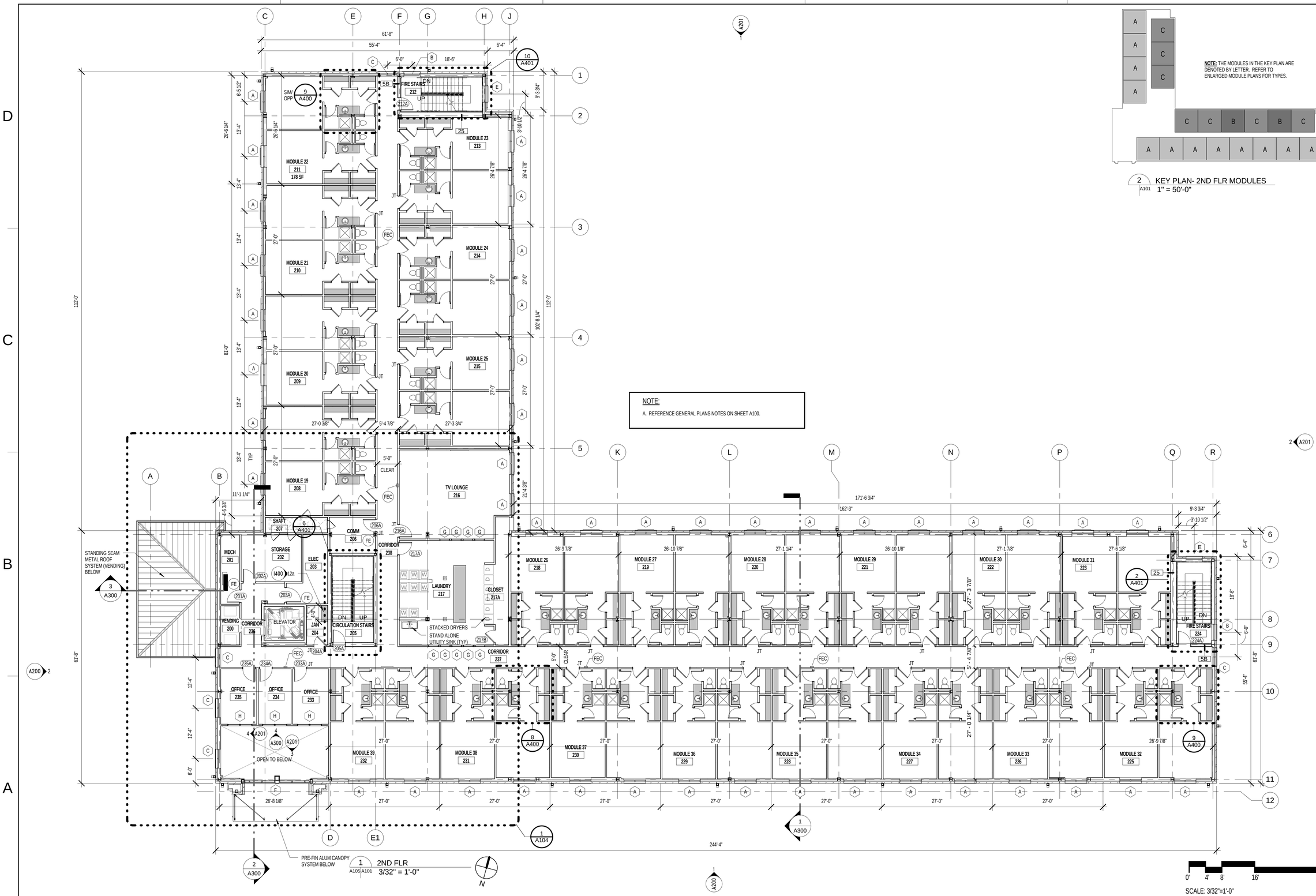

NOTE: THE MODULES IN THE KEY PLAN ARE DENOTED BY LETTER. REFER TO ENLARGED MODULE PLANS FOR TYPES.

2 A101 KEY PLAN- 2ND FLR MODULES
1" = 50'-0"

NOTE:

A. REFERENCE GENERAL PLANS NOTES ON SHEET A100.

SYM	DESCRIPTION	DATE	APPR.

NAVFAC

ANDERSON DRACE
JOINT VENTURE

REGISTERED ARCHITECT
Mark E. Lisher
2769
Biloxi, MS
STATE OF MISSISSIPPI
1-19-12
SEAL

EGH ARCHITECTS
eleyguildhardy.com
A/E INFO

APPROVED

FOR COMMANDER NAVFAC

ACTIVITY

SATISFACTORY TO DATE JAN 19, 2012

DES PCW DRW PCW CHK KLK

DEPARTMENT OF THE NAVY
NAVAL FACILITIES ENGINEERING COMMAND
IPT GULFCOAST
CORRY STATION

NAVAL FACILITIES ENGINEERING COMMAND SOUTHEAST
NAVAL AIR STATION JACKSONVILLE, FL
PENSACOLA, FLORIDA

BUILDING P-724 Corry "A" School BEQ
REVISED [2+0] MODULE DESIGN

2ND FLOOR PLAN

SCALE: AS INDICATED

EPROJECT NO.: 10-045

CONSTR. CONTR. NO.
N69450-10-C-0755

NAVFAC DRAWING NO.
15050407

SHEET 62 OF 204

A101

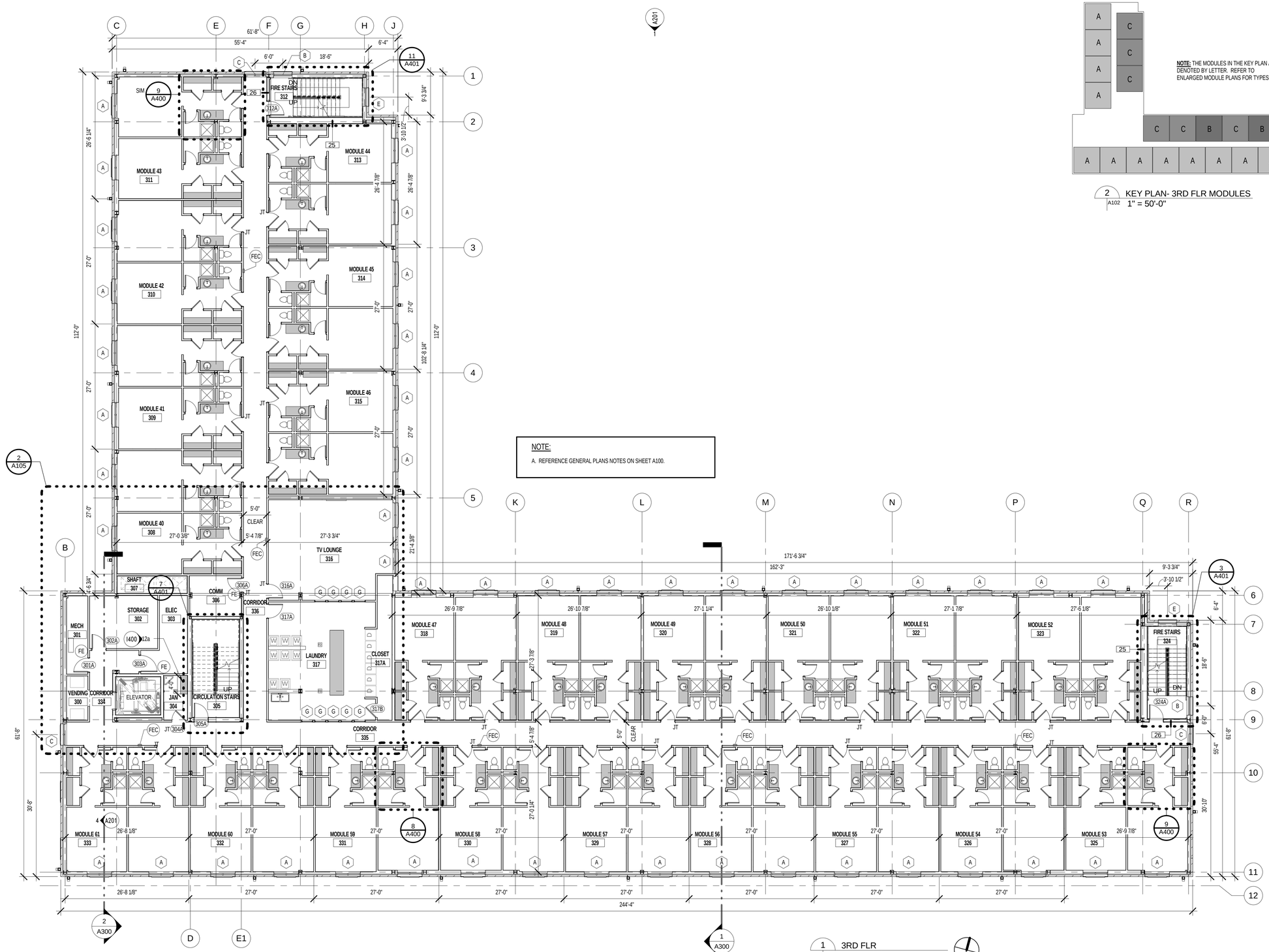

NOTE:

A. REFERENCE GENERAL PLANS NOTES ON SHEET A100.

1 A105/A102 3RD FLR 3/32" = 1'-0"

SCALE: 3/32"=1'-0"

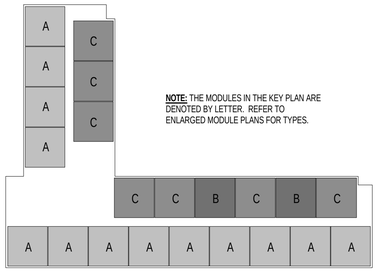

2 A102 KEY PLAN- 3RD FLR MODULES
1" = 50'-0"

SYM	DESCRIPTION	DATE	APPR.

NAVFAC

ANDERSON DRACE JOINT VENTURE

REGISTERED ARCHITECT Mark E. Lishen 2769 Biloxi, MS STATE OF MISSISSIPPI 1-17-12 SEAL

EGH ARCHITECTS eleyguildhardy.com A/E INFO

APPROVED

FOR COMMANDER NAVFAC

ACTIVITY

SATISFACTORY TO DATE JAN 19, 2012

DES PCW DRW PCW CHK KLK

DEPARTMENT OF THE NAVY
NAVAL FACILITIES ENGINEERING COMMAND
IPT GULFCOAST
CORRY STATION

NAVAL FACILITIES ENGINEERING COMMAND SOUTHEAST
NAVAL AIR STATION JACKSONVILLE, FL
PENSACOLA, FLORIDA

BUILDING P-724 Corry "A" School BEQ
REVISED [2+0] MODULE DESIGN

3RD FLOOR PLAN

SCALE: AS INDICATED

EPROJECT NO.: 10-045

CONSTR. CONTR. NO. N69450-10-C-0755

NAVFAC DRAWING NO. 15050408

SHEET 63 OF 204

A102

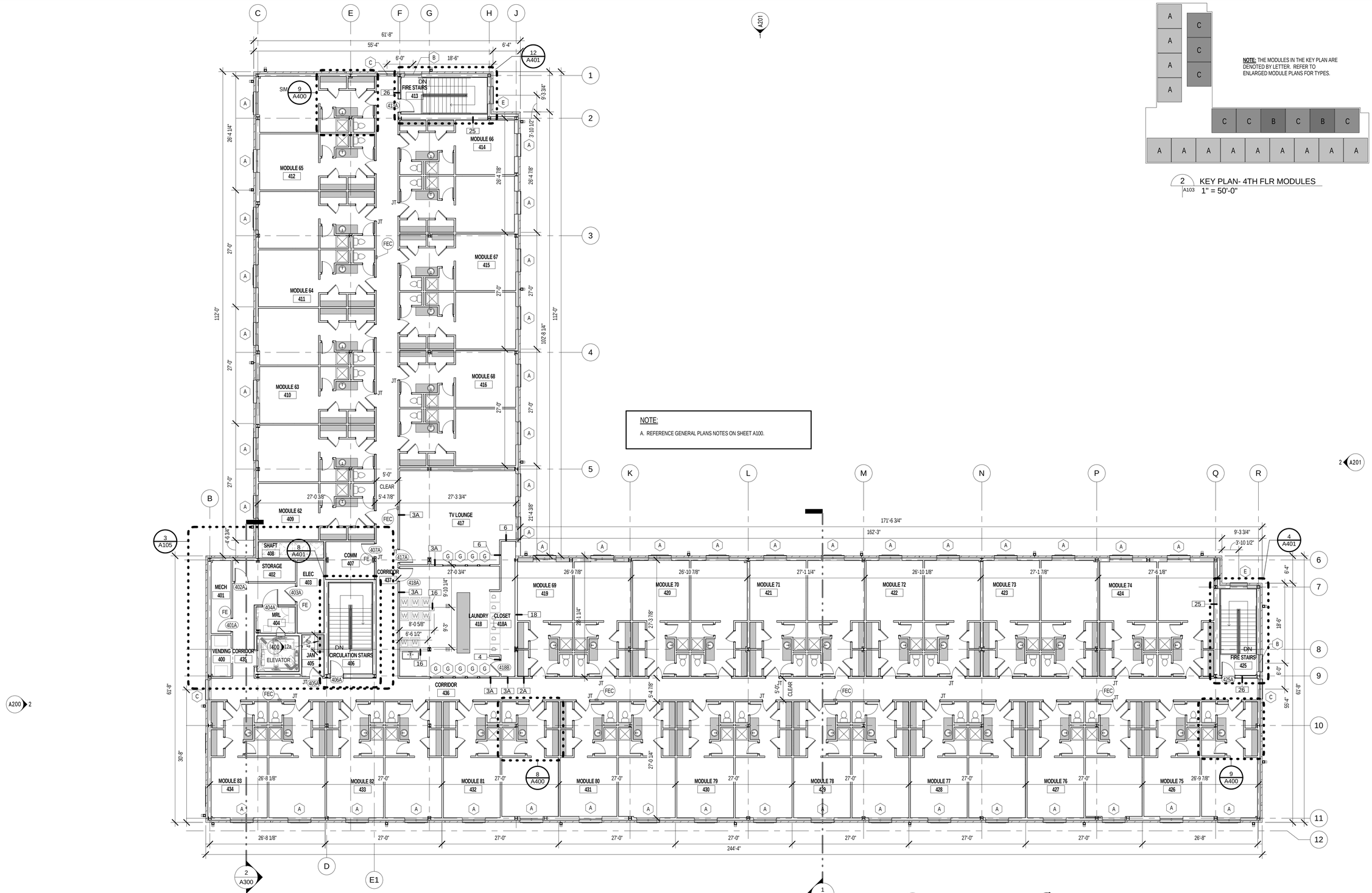
MODULE 62 409
MODULE 63 410
MODULE 64 411
MODULE 65 412
MODULE 66 414
MODULE 67 415
MODULE 68 416
MODULE 69 419
MODULE 70 420
MODULE 71 421
MODULE 72 422
MODULE 73 423
MODULE 74 424
MODULE 75 426
MODULE 76 427
MODULE 77 428
MODULE 78 429
MODULE 79 430
MODULE 80 431
MODULE 81 432
MODULE 82 433
MODULE 83 434
FIRE STAIRS 413
FIRE STAIRS 425
TV LOUNGE 417
LAUNDRY 418
CLOSET 418A
CORRIDOR 437
CORRIDOR 436
SHAFT 408
STORAGE 402
COMM 407
ELEC 403
MECH 401
MRL 404
VENDING 400
CORRIDOR 435
ELEVATOR
JAN 405
CIRCULATION STAIRS 406
61'-8"
55'-4"
112'-0"
102'-8 1/4"
171'-6 3/4"
162'-3"
244'-4"
NOTE:
A. REFERENCE GENERAL PLANS NOTES ON SHEET A100.
NOTE: THE MODULES IN THE KEY PLAN ARE DENOTED BY LETTER. REFER TO ENLARGED MODULE PLANS FOR TYPES.
2 A103 KEY PLAN- 4TH FLR MODULES
1" = 50'-0"
1 A105 A103 4TH FLR
3/32" = 1'-0"
SCALE: 3/32"=1'-0"
NAVFAC
ANDERSON DRACE
JOINT VENTURE
REGISTERED ARCHITECT
Mark E Lishen
2769
Biloxi, MS
STATE OF MISSISSIPPI
1-19-12
SEAL
EGH ARCHITECTS
eleyguildhardy.com
A/E INFO
APPROVED
FOR COMMANDER NAVFAC
ACTIVITY
SATISFACTORY TO
DATE JAN 19, 2012
DES FCW
DRW FCW
CHK KLK
APPR.
DATE
DESCRIPTION
SYM
DEPARTMENT OF THE NAVY
NAVAL FACILITIES ENGINEERING COMMAND
NAVAL FACILITIES ENGINEERING COMMAND SOUTHEAST
NAVAL AIR STATION JACKSONVILLE, FL
PT GULF/COAST
PENSACOLA, FLORIDA
CORRY STATION
BUILDING P-724 Corry "A" School BEQ
REVISED [2+0] MODULE DESIGN
4TH FLOOR PLAN
SCALE: AS INDICATED
EPROJECT NO.: 10-045
CONSTR. CONTR. NO.
N69450-10-C-0755
NAVFAC DRAWING NO.
15050409
SHEET 64 OF 204
A103

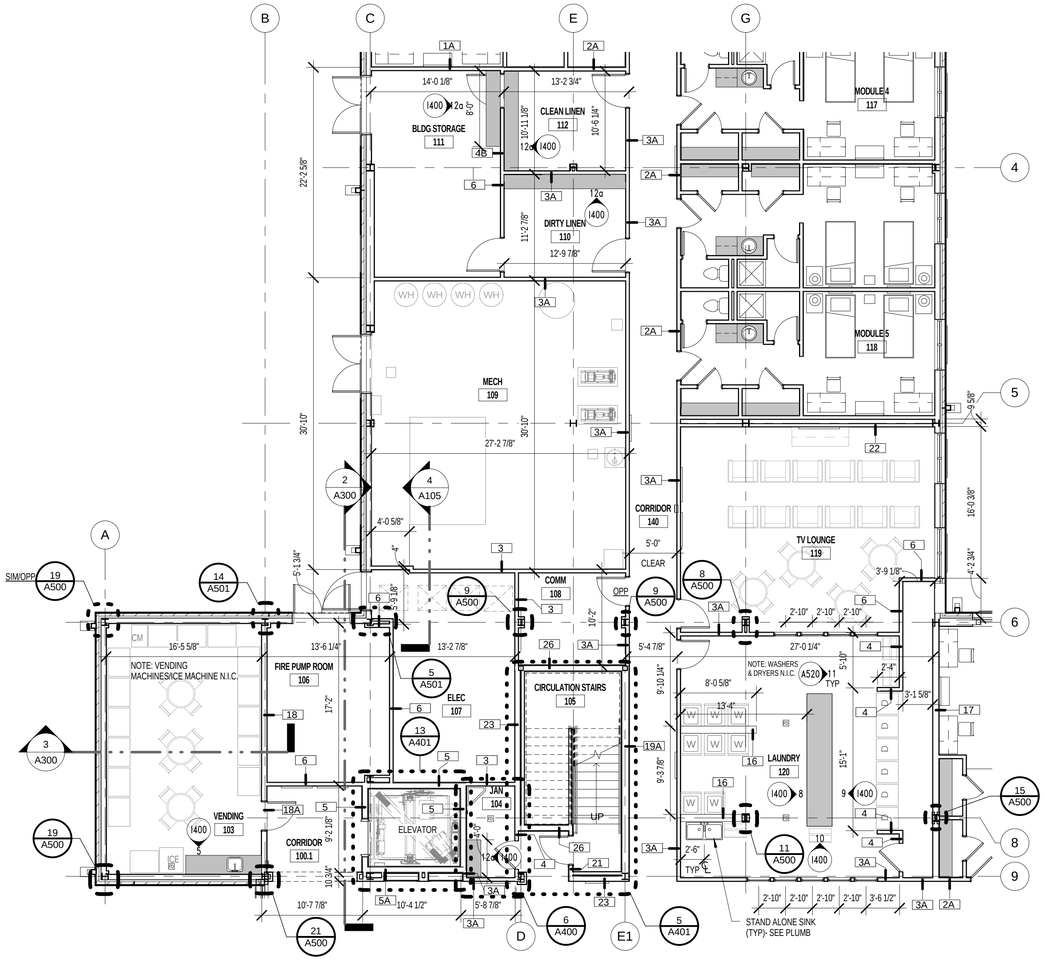

2 A100|A104 1ST FLR- ENLARGED CORE PLAN
1/8" = 1'-0"

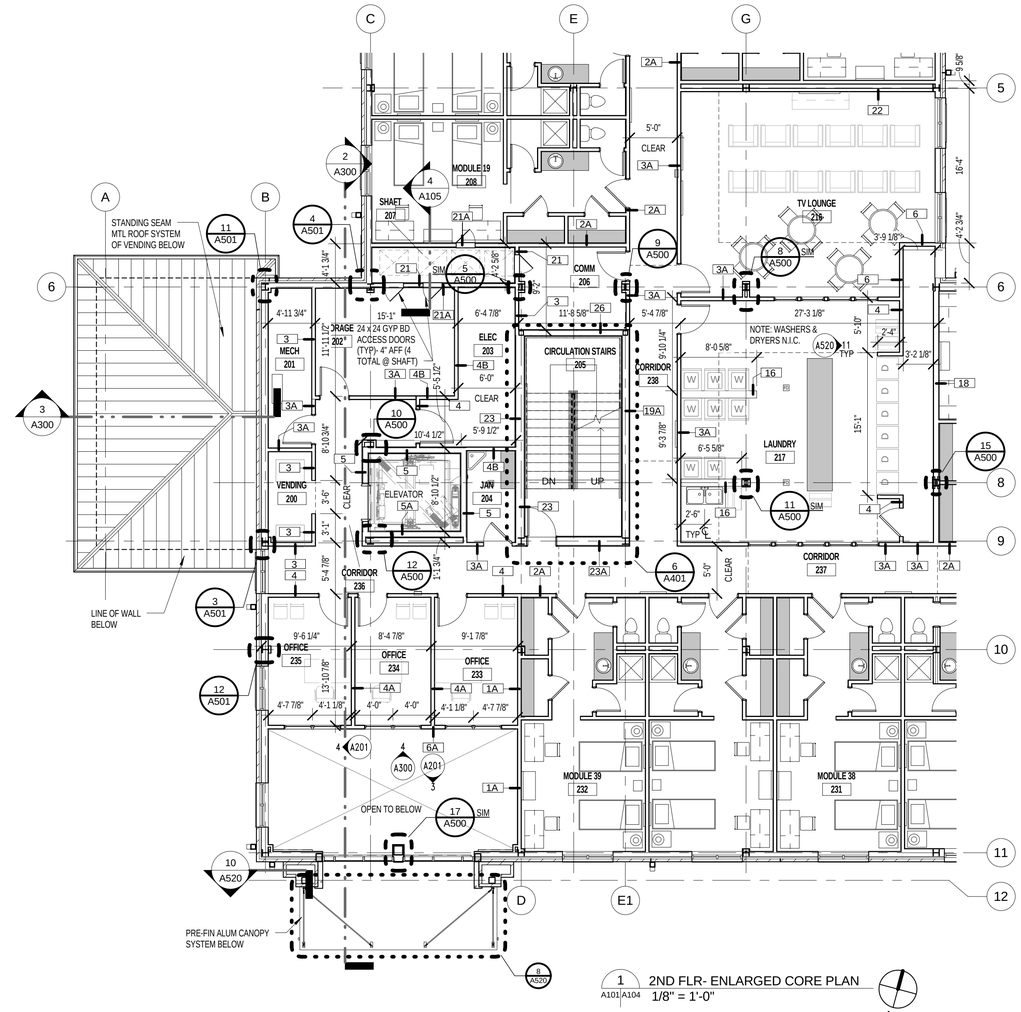

1 A101|A104 2ND FLR- ENLARGED CORE PLAN
1/8" = 1'-0"

0' 4' 8' 16' 32'
SCALE: 1/8" = 1'-0"

SYM	DESCRIPTION	DATE	APPR

NAVFAC

ANDERSON DRACE JOINT VENTURE

REGISTERED ARCHITECT Mark E. Lisher 2769 Biloxi, MS STATE OF MISSISSIPPI 1-17-12 SEAL

EGH ARCHITECTS eleyguildhardy.com A/E INFO

APPROVED

FOR COMMANDER NAVFAC

ACTIVITY

SATISFACTORY TO DATE JAN 19, 2012

DES	PCW	DRW	PCW	CHK	KLK

DEPARTMENT OF THE NAVY
NAVAL FACILITIES ENGINEERING COMMAND SOUTHEAST
PT GULF/COAST
CORRY STATION

NAVAL FACILITIES ENGINEERING COMMAND
NAVAL AIR STATION JACKSONVILLE, FL
PENSACOLA, FLORIDA

BUILDING P-724 Corry "A" School BEQ
REVISED [2+0] MODULE DESIGN

ENLARGED CORE PLANS

SCALE: AS INDICATED
EPROJECT NO.: 10-045
CONSTR. CONTR. NO. N69450-10-C-0755
NAVFAC DRAWING NO. 15050410
SHEET 65 OF 204

A104

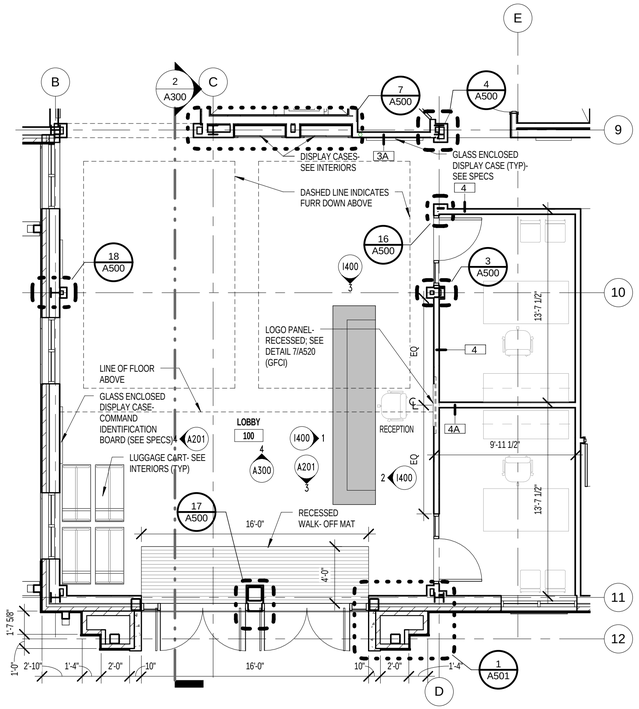

1 A100|A105 1ST FLR- ENLARGED LOBBY
3/16" = 1'-0"

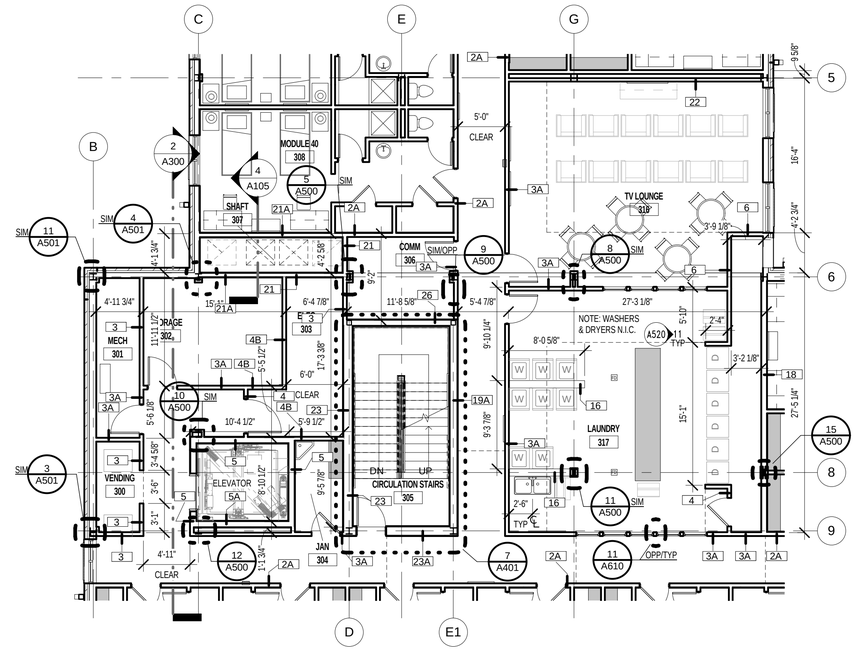

2 A102|A105 3RD FLR- ENLARGED CORE PLAN
1/8" = 1'-0"

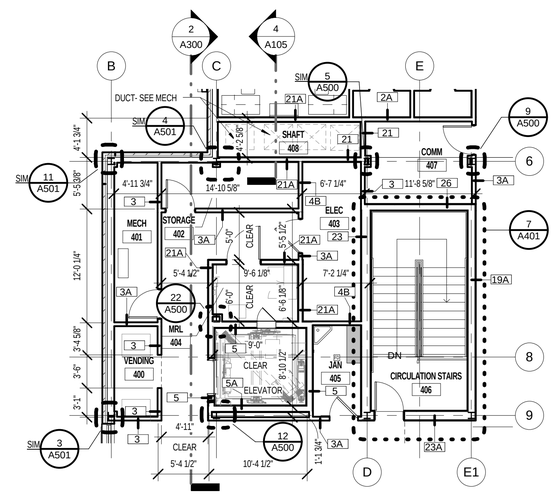

3 A103|A105 4TH FLR- ENLARGED CORE PLAN
1/8" = 1'-0"

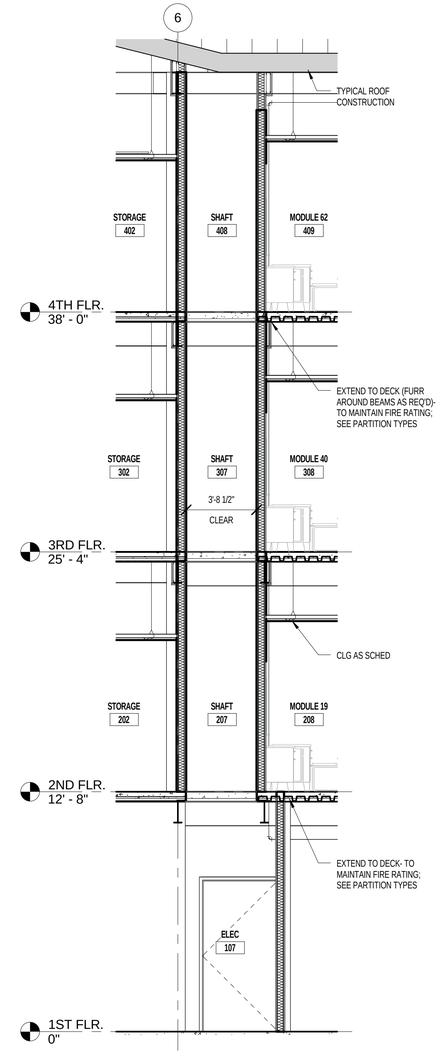

4 A104|A105 MECH SHAFT SECTION
1/4" = 1'-0"

0' 2' 4' 6' 10' 14'
SCALE: 3/16"=1'-0"

0' 4' 8' 16' 32'
SCALE: 1/8" = 1'-0"

APPR.	DATE	DESCRIPTION	SYM

NAVFAC

ANDERSON DRACE JOINT VENTURE

REGISTERED ARCHITECT Mark E. Lisher 2769 Biloxi, MS STATE OF MISSISSIPPI 1-17-12 SEAL

EGH ARCHITECTS eleyguildhardy.com A/E INFO

APPROVED

FOR COMMANDER NAVFAC

ACTIVITY

SATISFACTORY TO DATE JAN 19, 2012

DES PCW DRW PCW CHK KLK

DEPARTMENT OF THE NAVY
NAVAL FACILITIES ENGINEERING COMMAND SOUTHEAST
1P7 GULF-COAST
CORRY STATION

NAVAL FACILITIES ENGINEERING COMMAND
NAVAL AIR STATION, JACKSONVILLE, FL
PENSACOLA, FLORIDA

BUILDING P-724 Corry "A" School BEQ
REVISED [2+0] MODULE DESIGN

ENLARGED CORE PLANS

SCALE: AS INDICATED
EPROJECT NO.: 10-045
CONSTR. CONTR. NO. N69450-10-C-0755
NAVFAC DRAWING NO. 15050411
SHEET 66 OF 204

A105

ROOF PLAN GENERAL NOTES:

A. VERIFY LOCATION , SIZE, AND NUMBER OF MECHANICAL AND PLUMBING ROOF PENETRATIONS WITH PLUMBING AND MECHANICAL.

B. PLACEMENT OF VTR'S SHALL NOT CONFLICT WITH STANDING SEAM LOCATIONS..

C. MINIMUM R-VALUE OF ROOF ASSEMBLY IS R-49 (R-30 RIGID INSUL & R-19 SPRAY-ON UNDERSIDE OF DECK).

D. ALL SLOPING METAL ROOFS SHALL RECEIVE SELF-ADHERING FLASHING MEMBRANE OVER ENTIRE SURFACE, LAPPED OVER EAVES.

E. ALL GUTTERS AND DOWNSPOUTS TO BE PREFINISHED MTL TO MATCH THE ROOF COLOR. ALL GUTTERS TO BE 5"x6.75". ALL DOWNSPOUTS TO 4"x6"- DENOTED WITH "DS" ON ROOF PLAN. SEE ELEVATIONS ON SHEETS A200/A201 FOR TYPICAL DOWNSPOUT SPACING & LOCATIONS.

4 A110 ROOF DETAIL- VTR
1 1/2" = 1'-0"

2 A110 A110 TYPICAL ROOF RIDGE DETAIL
1 1/2" = 1'-0"

3 A110 A110 TYPICAL VALLEY DETAIL
1 1/2" = 1'-0"

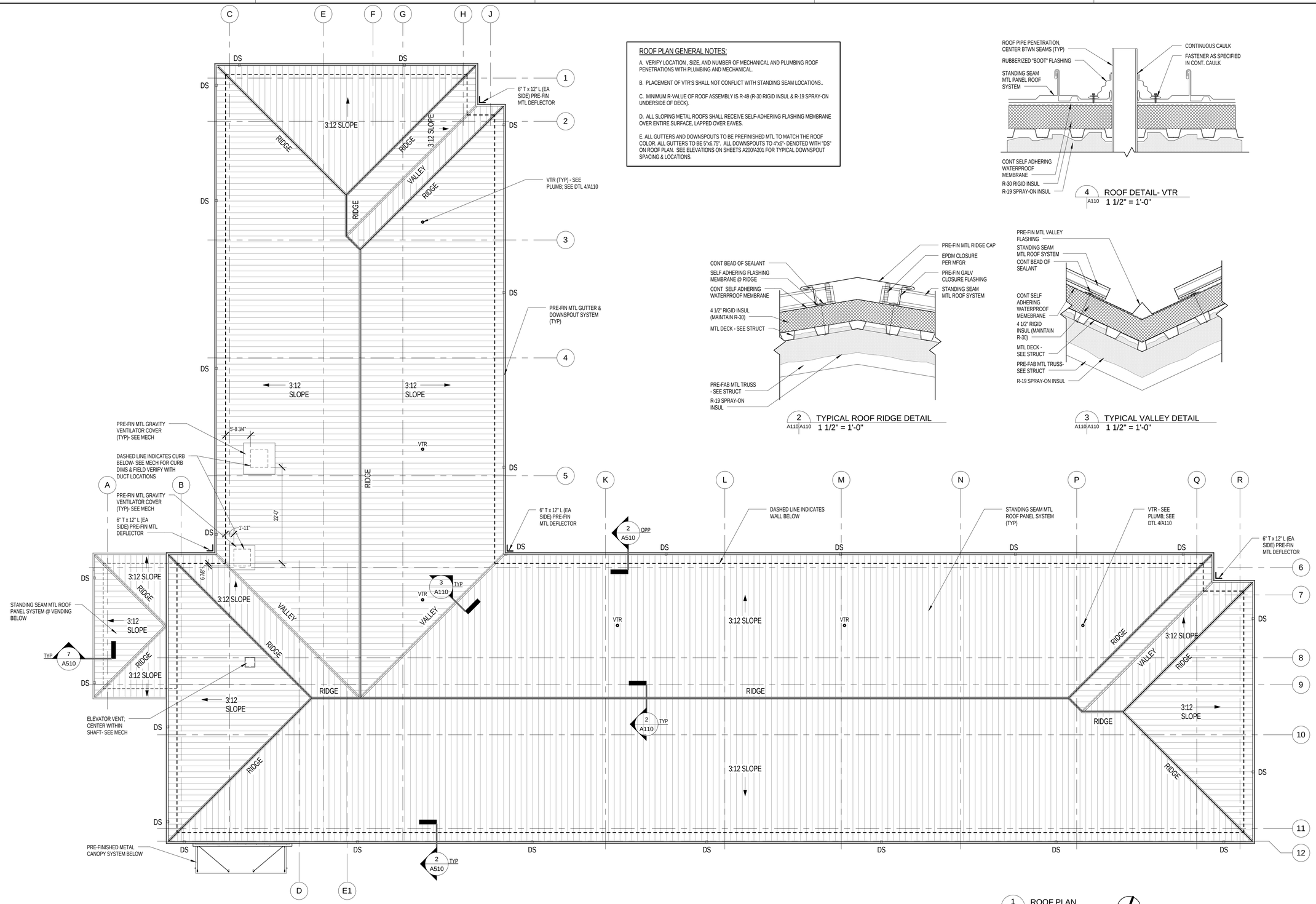

1 A110 ROOF PLAN
3/32" = 1'-0"

SCALE: 3/32"=1'-0"

APPR	DATE	DESCRIPTION	SYM

NAVFAC

ANDERSON DRACE JOINT VENTURE

REGISTERED ARCHITECT Mark E Lishen 2769 Biloxi, MS STATE OF MISSISSIPPI 1-19-12 SEAL

EGH ARCHITECTS eleyguildhardy.com A/E INFO

APPROVED

FOR COMMANDER NAVFAC

ACTIVITY

SATISFACTORY TO DATE JAN 19, 2012

DES PCW DRW PCW CHK KLK

DEPARTMENT OF THE NAVY
NAVAL FACILITIES ENGINEERING COMMAND SOUTHEAST
NAVAL FACILITIES ENGINEERING COMMAND
NAVAL AIR STATION JACKSONVILLE, FL
1PT GULF-COAST
CORRY STATION
PENSACOLA, FLORIDA
BUILDING P-724 Corry "A" School BEQ
REVISED [2+0] MODULE DESIGN
ROOF PLAN

SCALE: AS INDICATED

EPROJECT NO.: 10-045

CONSTR. CONTR. NO. N69450-10-C-0755

NAVFAC DRAWING NO. 15050412

SHEET 67 OF 204

A110

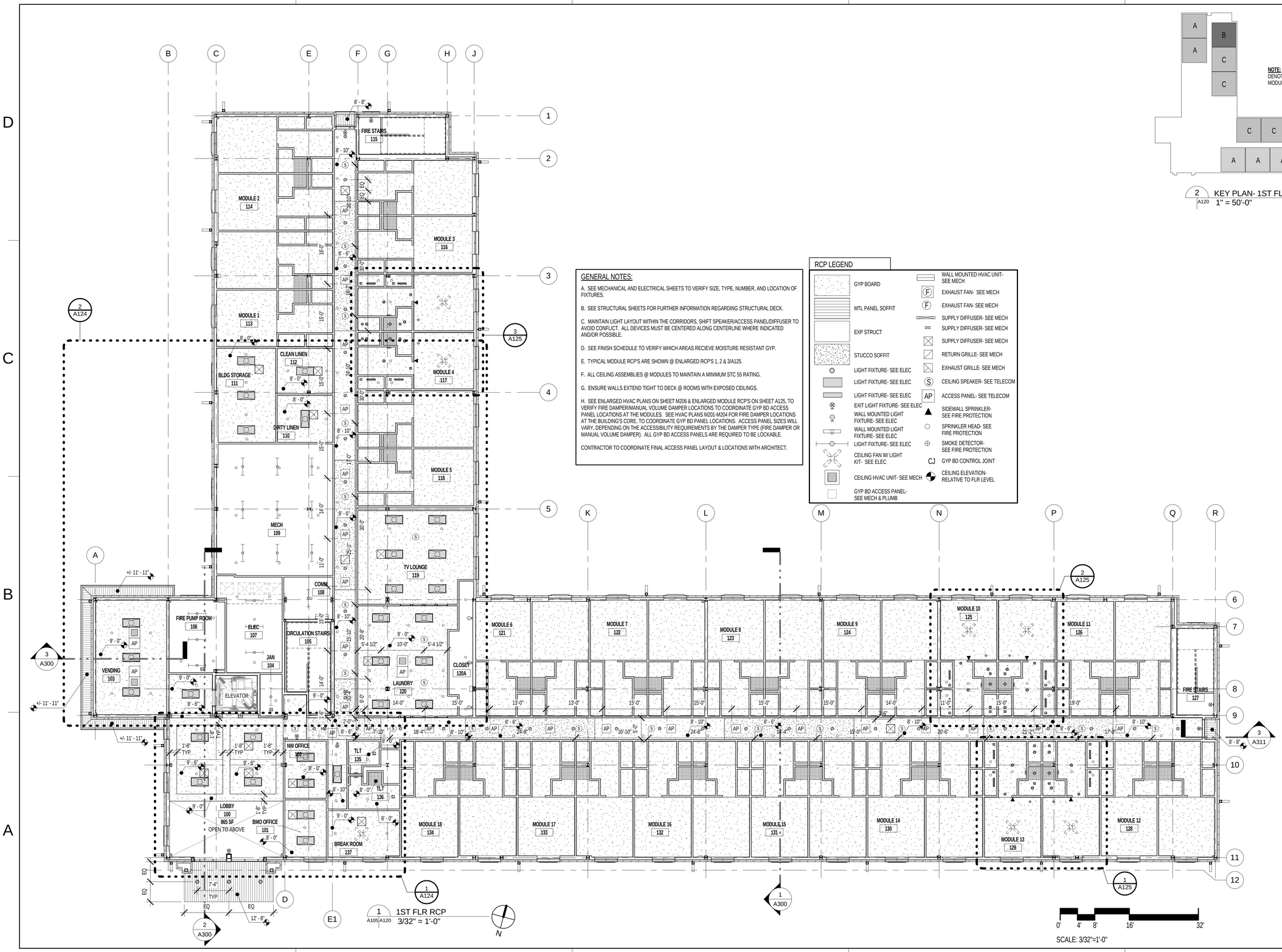

GENERAL NOTES:

A. SEE MECHANICAL AND ELECTRICAL SHEETS TO VERIFY SIZE, TYPE, NUMBER, AND LOCATION OF FIXTURES.

B. SEE STRUCTURAL SHEETS FOR FURTHER INFORMATION REGARDING STRUCTURAL DECK.

C. MAINTAIN LIGHT LAYOUT WITHIN THE CORRIDORS, SHIFT SPEAKER/ACCESS PANEL/DIFFUSER TO AVOID CONFLICT. ALL DEVICES MUST BE CENTERED ALONG CENTERLINE WHERE INDICATED AND/OR POSSIBLE.

D. SEE FINISH SCHEDULE TO VERIFY WHICH AREAS RECIEVE MOISTURE RESISTANT GYP.

E. TYPICAL MODULE RCP'S ARE SHOWN @ ENLARGED RCP'S 1, 2 & 3/A125.

F. ALL CEILING ASSEMBLIES @ MODULES TO MAINTAIN A MINIMUM STC 55 RATING.

G. ENSURE WALLS EXTEND TIGHT TO DECK @ ROOMS WITH EXPOSED CEILINGS.

H. SEE ENLARGED HVAC PLANS ON SHEET M206 & ENLARGED MODULE RCP'S ON SHEET A125, TO VERIFY FIRE DAMPER/MANUAL VOLUME DAMPER LOCATIONS TO COORDINATE GYP BD ACCESS PANEL LOCATIONS AT THE MODULES. SEE HVAC PLANS M201-M204 FOR FIRE DAMPER LOCATIONS AT THE BUILDING'S CORE, TO COORDINATE GYP BD PANEL LOCATIONS. ACCESS PANEL SIZES WILL VARY, DEPENDING ON THE ACCESSIBILITY REQUIREMENTS BY THE DAMPER TYPE (FIRE DAMPER OR MANUAL VOLUME DAMPER). ALL GYP BD ACCESS PANELS ARE REQUIRED TO BE LOCKABLE.

CONTRACTOR TO COORDINATE FINAL ACCESS PANEL LAYOUT & LOCATIONS WITH ARCHITECT.

RCP LEGEND

GYP BOARD	WALL MOUNTED HVAC UNIT- SEE MECH
MTL PANEL SOFFIT	EXHAUST FAN- SEE MECH
EXP STRUCT	EXHAUST FAN- SEE MECH
STUCCO SOFFIT	SUPPLY DIFFUSER- SEE MECH
LIGHT FIXTURE- SEE ELEC	SUPPLY DIFFUSER- SEE MECH
LIGHT FIXTURE- SEE ELEC	SUPPLY DIFFUSER- SEE MECH
LIGHT FIXTURE- SEE ELEC	RETURN GRILLE- SEE MECH
EXIT LIGHT FIXTURE- SEE ELEC	EXHAUST GRILLE- SEE MECH
WALL MOUNTED LIGHT FIXTURE- SEE ELEC	CEILING SPEAKER- SEE TELECOM
WALL MOUNTED LIGHT FIXTURE- SEE ELEC	ACCESS PANEL- SEE TELECOM
LIGHT FIXTURE- SEE ELEC	SIDEWALL SPRINKLER- SEE FIRE PROTECTION
CEILING FAN W/ LIGHT KIT- SEE ELEC	SPRINKLER HEAD- SEE FIRE PROTECTION
CEILING HVAC UNIT- SEE MECH	SMOKE DETECTOR- SEE FIRE PROTECTION
GYP BD ACCESS PANEL- SEE MECH & PLUMB	GYP BD CONTROL JOINT
	CEILING ELEVATION- RELATIVE TO FLR LEVEL

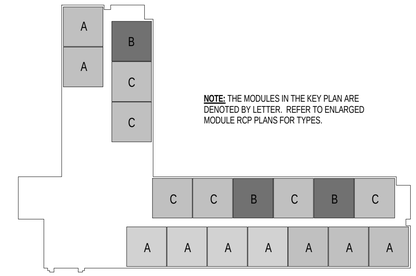

NOTE: THE MODULES IN THE KEY PLAN ARE DENOTED BY LETTER. REFER TO ENLARGED MODULE RCP PLANS FOR TYPES.

2 A120 KEY PLAN- 1ST FLR RCP MODULES
1" = 50'-0"

SYM	DESCRIPTION	DATE	APPR

NAVFAC

ANDERSON DRACE JOINT VENTURE

REGISTERED ARCHITECT Mark E. Lisher 2769 Biloxi, MS STATE OF MISSISSIPPI 1-19-12 SEAL

EGH ARCHITECTS eleyguildhardy.com A/E INFO

APPROVED

FOR COMMANDER NAVFAC

ACTIVITY

SATISFACTORY TO DATE JAN 19, 2012

DES PCW DRW PCW CHK KLK

NAVAL FACILITIES ENGINEERING COMMAND
DEPARTMENT OF THE NAVY
NAVAL FACILITIES ENGINEERING COMMAND SOUTHEAST
NAVAL AIR STATION JACKSONVILLE, FL
IPT GULF COAST
CORRY STATION
PENSACOLA, FLORIDA

BUILDING P-724 Corry "A" School BEQ
REVISED [2+0] MODULE DESIGN

1ST FLR RCP

SCALE: AS INDICATED

EPROJECT NO.: 10-045

CONSTR. CONTR. NO. N69450-10-C-0755

NAVFAC DRAWING NO. 15050413

SHEET 68 OF 204

A120

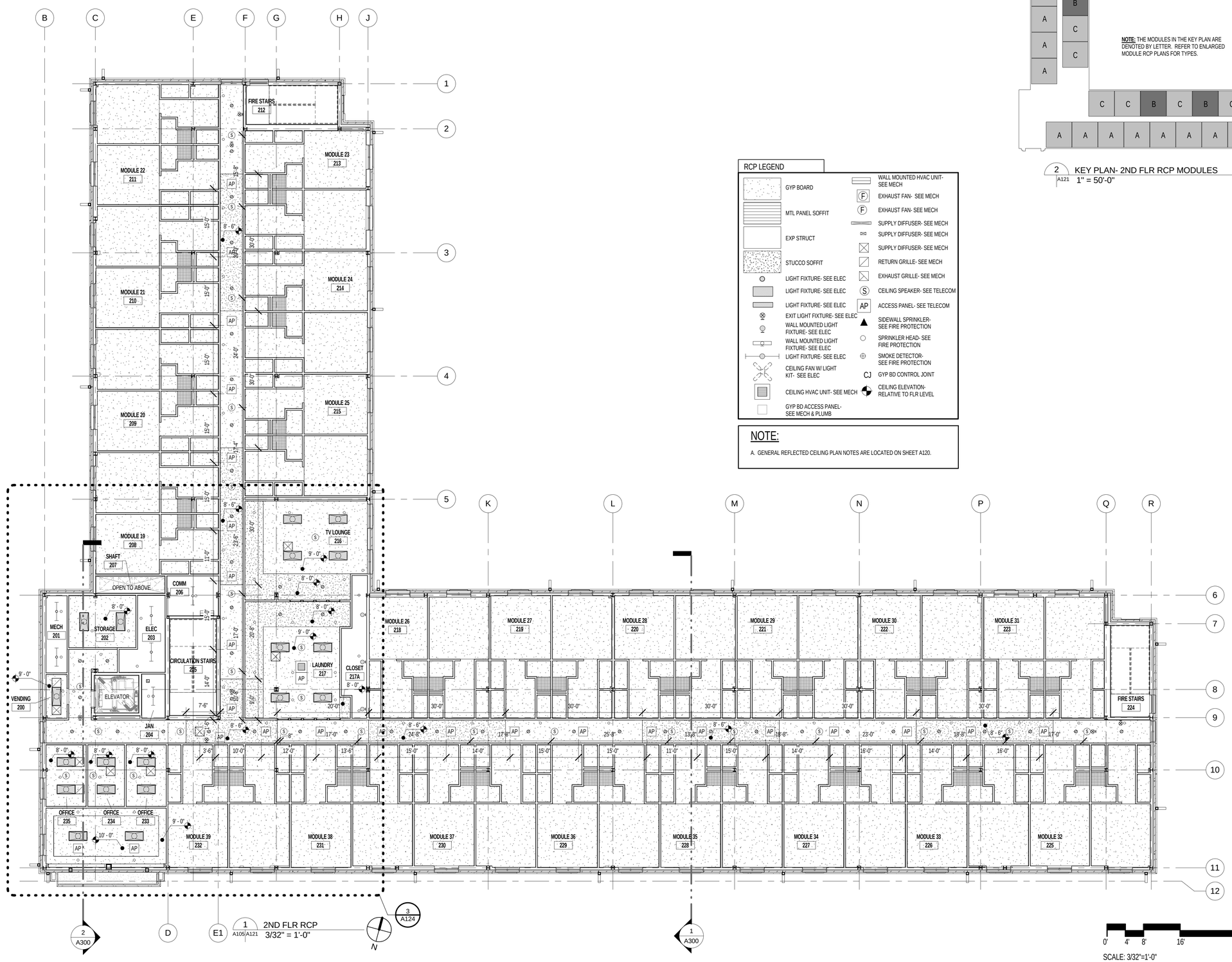

1 2ND FLR RCP
A105/A121 3/32" = 1'-0"

SCALE: 3/32"=1'-0"

RCP LEGEND

GYP BOARD	WALL MOUNTED HVAC UNIT- SEE MECH
MTL PANEL SOFFIT	EXHAUST FAN- SEE MECH
EXP STRUCT	EXHAUST FAN- SEE MECH
STUCCO SOFFIT	SUPPLY DIFFUSER- SEE MECH
LIGHT FIXTURE- SEE ELEC	SUPPLY DIFFUSER- SEE MECH
LIGHT FIXTURE- SEE ELEC	SUPPLY DIFFUSER- SEE MECH
LIGHT FIXTURE- SEE ELEC	RETURN GRILLE- SEE MECH
EXIT LIGHT FIXTURE- SEE ELEC	EXHAUST GRILLE- SEE MECH
WALL MOUNTED LIGHT FIXTURE- SEE ELEC	CEILING SPEAKER- SEE TELECOM
WALL MOUNTED LIGHT FIXTURE- SEE ELEC	ACCESS PANEL- SEE TELECOM
LIGHT FIXTURE- SEE ELEC	SIDEWALL SPRINKLER- SEE FIRE PROTECTION
CEILING FAN W/ LIGHT KIT- SEE ELEC	SPRINKLER HEAD- SEE FIRE PROTECTION
CEILING HVAC UNIT- SEE MECH	SMOKE DETECTOR- SEE FIRE PROTECTION
GYP BD ACCESS PANEL- SEE MECH & PLUMB	GYP BD CONTROL JOINT
	CEILING ELEVATION- RELATIVE TO FLR LEVEL

NOTE:

A. GENERAL REFLECTED CEILING PLAN NOTES ARE LOCATED ON SHEET A120.

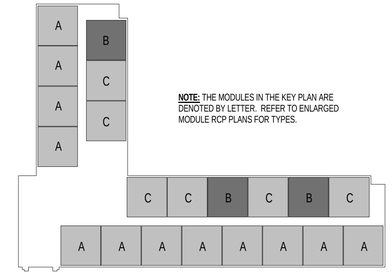

NOTE: THE MODULES IN THE KEY PLAN ARE DENOTED BY LETTER. REFER TO ENLARGED MODULE RCP PLANS FOR TYPES.

2 KEY PLAN- 2ND FLR RCP MODULES
A121 1" = 50'-0"

SYM	DESCRIPTION	DATE	APPR

NAVFAC

ANDERSON DRACE JOINT VENTURE

REGISTERED ARCHITECT Mark E. Lisher 2769 Biloxi, MS STATE OF MISSISSIPPI 1-17-12 SEAL

EGH ARCHITECTS eleyguildhardy.com A/E INFO

APPROVED

FOR COMMANDER NAVFAC

ACTIVITY

SATISFACTORY TO DATE JAN 19, 2012

DES PCW DRW PCW CHK KLK

DEPARTMENT OF THE NAVY
NAVAL FACILITIES ENGINEERING COMMAND
IPT GULFCOAST
CORRY STATION

NAVAL FACILITIES ENGINEERING COMMAND SOUTHEAST
NAVAL AIR STATION, JACKSONVILLE, FL
PENSACOLA, FLORIDA

BUILDING P-724 Corry "A" School BEQ
REVISED [2+0] MODULE DESIGN

2ND FLR RCP

SCALE: AS INDICATED

EPROJECT NO.: 10-045

CONSTR. CONTR. NO. N69450-10-C-0755

NAVFAC DRAWING NO. 15050414

SHEET 69 OF 204

A121

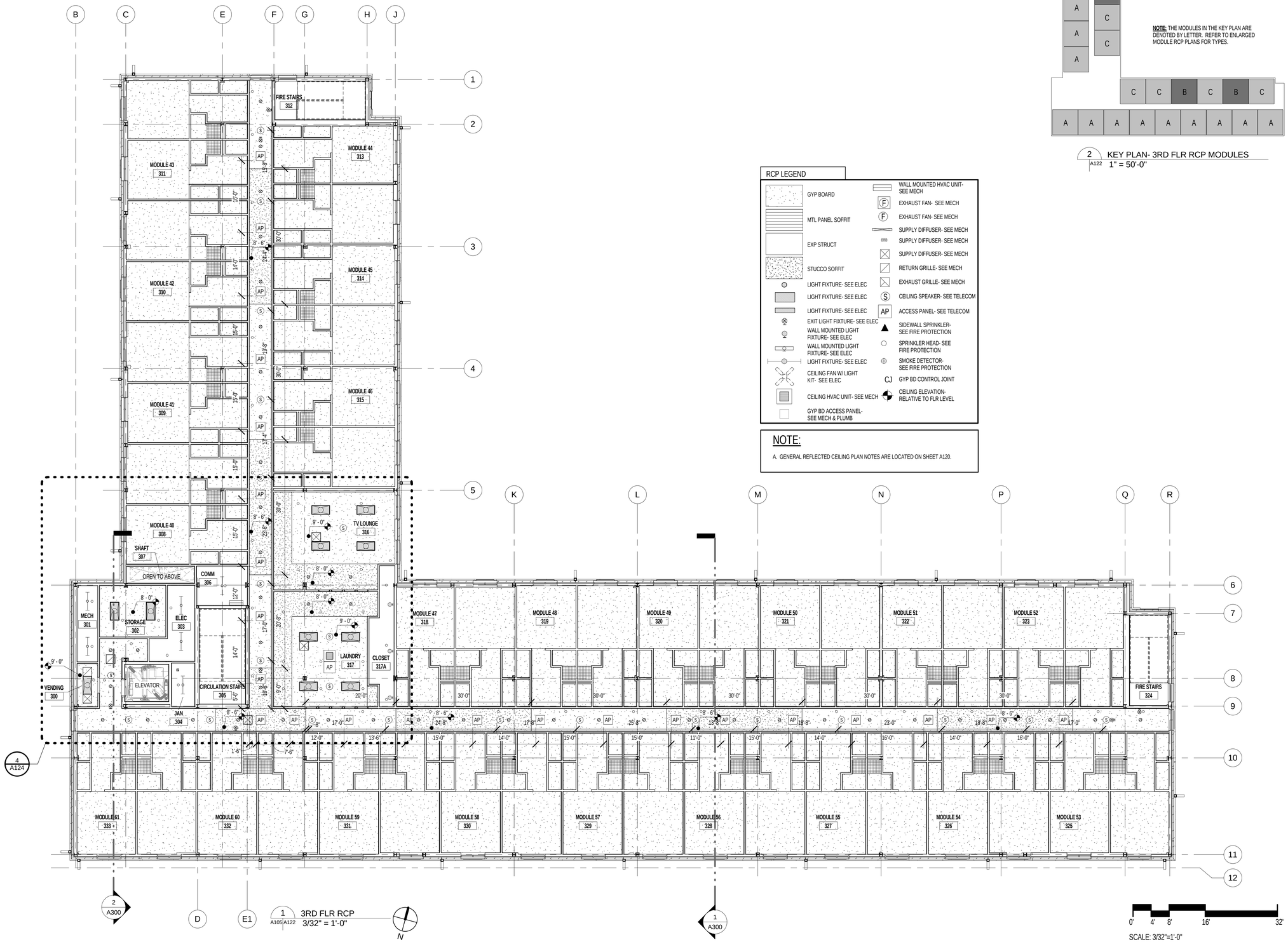

1 A105 A122 3RD FLR RCP
3/32" = 1'-0"

SCALE: 3/32"=1'-0"

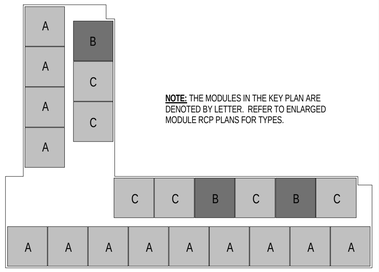

NOTE: THE MODULES IN THE KEY PLAN ARE DENOTED BY LETTER. REFER TO ENLARGED MODULE RCP PLANS FOR TYPES.

2 A122 KEY PLAN- 3RD FLR RCP MODULES
1" = 50'-0"

RCP LEGEND

GYP BOARD	WALL MOUNTED HVAC UNIT- SEE MECH
MTL PANEL SOFFIT	EXHAUST FAN- SEE MECH (F)
EXP STRUCT	EXHAUST FAN- SEE MECH (F)
STUCCO SOFFIT	SUPPLY DIFFUSER- SEE MECH
LIGHT FIXTURE- SEE ELEC	SUPPLY DIFFUSER- SEE MECH
LIGHT FIXTURE- SEE ELEC	SUPPLY DIFFUSER- SEE MECH
LIGHT FIXTURE- SEE ELEC	RETURN GRILLE- SEE MECH
EXIT LIGHT FIXTURE- SEE ELEC	EXHAUST GRILLE- SEE MECH
WALL MOUNTED LIGHT FIXTURE- SEE ELEC	CEILING SPEAKER- SEE TELECOM (S)
WALL MOUNTED LIGHT FIXTURE- SEE ELEC	ACCESS PANEL- SEE TELECOM (AP)
LIGHT FIXTURE- SEE ELEC	SIDEWALL SPRINKLER- SEE FIRE PROTECTION
CEILING FAN W/ LIGHT KIT- SEE ELEC	SPRINKLER HEAD- SEE FIRE PROTECTION
CEILING HVAC UNIT- SEE MECH	SMOKE DETECTOR- SEE FIRE PROTECTION
GYP BD ACCESS PANEL- SEE MECH & PLUMB	GYP BD CONTROL JOINT (CJ)
	CEILING ELEVATION- RELATIVE TO FLR LEVEL

NOTE:

A. GENERAL REFLECTED CEILING PLAN NOTES ARE LOCATED ON SHEET A120.

SYM	DESCRIPTION	DATE	APPR

NAVFAC

ANDERSON DRACE JOINT VENTURE

REGISTERED ARCHITECT Mark E Lisher 2769 Biloxi, MS STATE OF MISSISSIPPI 1-19-12 SEAL

EGH ARCHITECTS eleyguildhardy.com A/E INFO

APPROVED

FOR COMMANDER NAVFAC

ACTIVITY

SATISFACTORY TO DATE JAN 19, 2012

DES PCW DRW PCW CHK KLK

DEPARTMENT OF THE NAVY
NAVAL FACILITIES ENGINEERING COMMAND SOUTHEAST
PT GULF-COAST
CORRY STATION

NAVAL FACILITIES ENGINEERING COMMAND
NAVAL AIR STATION JACKSONVILLE, FL
PENSACOLA, FLORIDA

BUILDING P-724 Corry "A" School BEQ
REVISED [2+0] MODULE DESIGN

3RD FLR RCP

SCALE: AS INDICATED

EPROJECT NO.: 10-045

CONSTR. CONTR. NO. N69450-10-C-0755

NAVFAC DRAWING NO. 15050415

SHEET 70 OF 204

A122

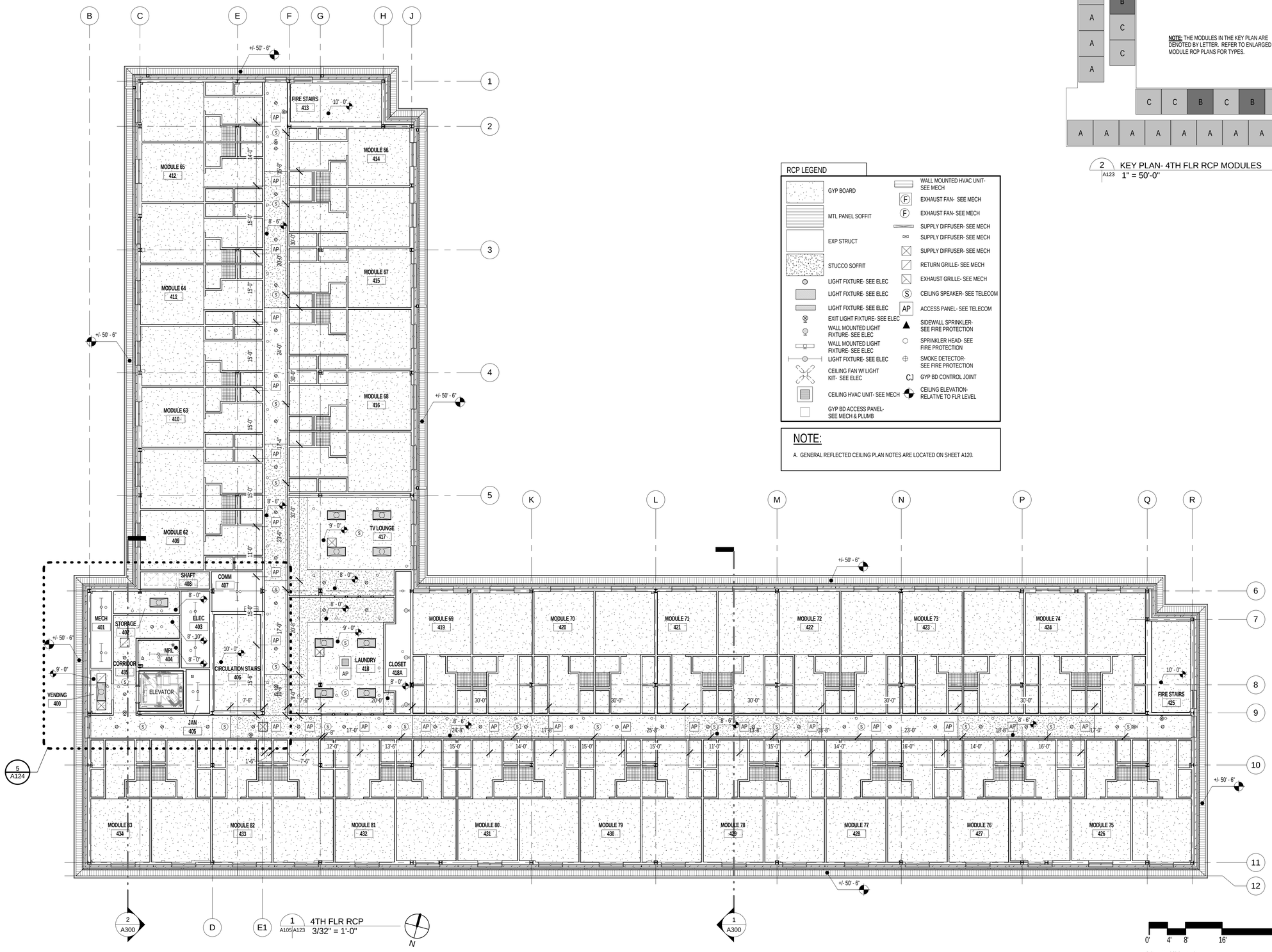

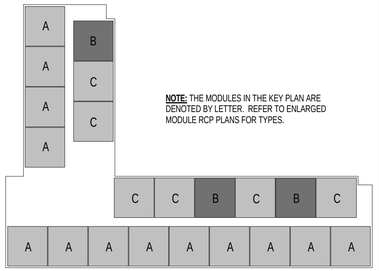

NOTE: THE MODULES IN THE KEY PLAN ARE DENOTED BY LETTER. REFER TO ENLARGED MODULE RCP PLANS FOR TYPES.

2 A123 KEY PLAN- 4TH FLR RCP MODULES
1" = 50'-0"

RCP LEGEND

	GYP BOARD		WALL MOUNTED HVAC UNIT- SEE MECH
	MTL PANEL SOFFIT	F	EXHAUST FAN- SEE MECH
	EXP STRUCT	F	EXHAUST FAN- SEE MECH
			SUPPLY DIFFUSER- SEE MECH
			SUPPLY DIFFUSER- SEE MECH
			SUPPLY DIFFUSER- SEE MECH
	STUCCO SOFFIT		RETURN GRILLE- SEE MECH
	LIGHT FIXTURE- SEE ELEC		EXHAUST GRILLE- SEE MECH
	LIGHT FIXTURE- SEE ELEC	S	CEILING SPEAKER- SEE TELECOM
	LIGHT FIXTURE- SEE ELEC	AP	ACCESS PANEL- SEE TELECOM
	EXIT LIGHT FIXTURE- SEE ELEC		SIDEWALL SPRINKLER- SEE FIRE PROTECTION
	WALL MOUNTED LIGHT FIXTURE- SEE ELEC		SPRINKLER HEAD- SEE FIRE PROTECTION
	WALL MOUNTED LIGHT FIXTURE- SEE ELEC		SMOKE DETECTOR- SEE FIRE PROTECTION
	LIGHT FIXTURE- SEE ELEC	CJ	GYP BD CONTROL JOINT
	CEILING FAN W/ LIGHT KIT- SEE ELEC		CEILING ELEVATION- RELATIVE TO FLR LEVEL
	CEILING HVAC UNIT- SEE MECH		
	GYP BD ACCESS PANEL- SEE MECH & PLUMB		

NOTE:

A. GENERAL REFLECTED CEILING PLAN NOTES ARE LOCATED ON SHEET A120.

SYM	DESCRIPTION	DATE	APPR

NAVFAC

ANDERSON DRACE JOINT VENTURE

REGISTERED ARCHITECT Mark E. Lishen 2769 Biloxi, MS STATE OF MISSISSIPPI 1-19-12 SEAL

EGH ARCHITECTS eleyguildhardy.com A/E INFO

APPROVED

FOR COMMANDER NAVFAC

ACTIVITY

SATISFACTORY TO DATE JAN 19, 2012

DES FCW DRW FCW CHK KLK

DEPARTMENT OF THE NAVY
NAVAL FACILITIES ENGINEERING COMMAND SOUTHEAST
PT GULF/COAST
CORRY STATION

NAVAL FACILITIES ENGINEERING COMMAND
NAVAL AIR STATION JACKSONVILLE, FL
PENSACOLA, FLORIDA

BUILDING P-724 Corry "A" School BEQ
REVISED [2+0] MODULE DESIGN

4TH FLR RCP

SCALE: AS INDICATED

EPROJECT NO.: 10-045

CONSTR. CONTR. NO. N69450-10-C-0755

NAVFAC DRAWING NO. 15050416

SHEET 71 OF 204

A123

RCP LEGEND

GYP BOARD	WALL MOUNTED HVAC UNIT- SEE MECH
MTL PANEL SOFFIT	EXHAUST FAN- SEE MECH
EXP STRUCT	EXHAUST FAN- SEE MECH
STUCCO SOFFIT	SUPPLY DIFFUSER- SEE MECH
LIGHT FIXTURE- SEE ELEC	SUPPLY DIFFUSER- SEE MECH
LIGHT FIXTURE- SEE ELEC	SUPPLY DIFFUSER- SEE MECH
LIGHT FIXTURE- SEE ELEC	RETURN GRILLE- SEE MECH
EXIT LIGHT FIXTURE- SEE ELEC	EXHAUST GRILLE- SEE MECH
WALL MOUNTED LIGHT FIXTURE- SEE ELEC	CEILING SPEAKER- SEE TELECOM
WALL MOUNTED LIGHT FIXTURE- SEE ELEC	ACCESS PANEL- SEE TELECOM
LIGHT FIXTURE- SEE ELEC	SIDEWALL SPRINKLER- SEE FIRE PROTECTION
CEILING FAN W/ LIGHT KIT- SEE ELEC	SPRINKLER HEAD- SEE FIRE PROTECTION
CEILING HVAC UNIT- SEE MECH	SMOKE DETECTOR- SEE FIRE PROTECTION
GYP BD ACCESS PANEL- SEE MECH & PLUMB	GYP BD CONTROL JOINT
	CEILING ELEVATION- RELATIVE TO FLR LEVEL

NOTE:

A. GENERAL REFLECTED CEILING PLAN NOTES ARE LOCATED ON SHEET A120.

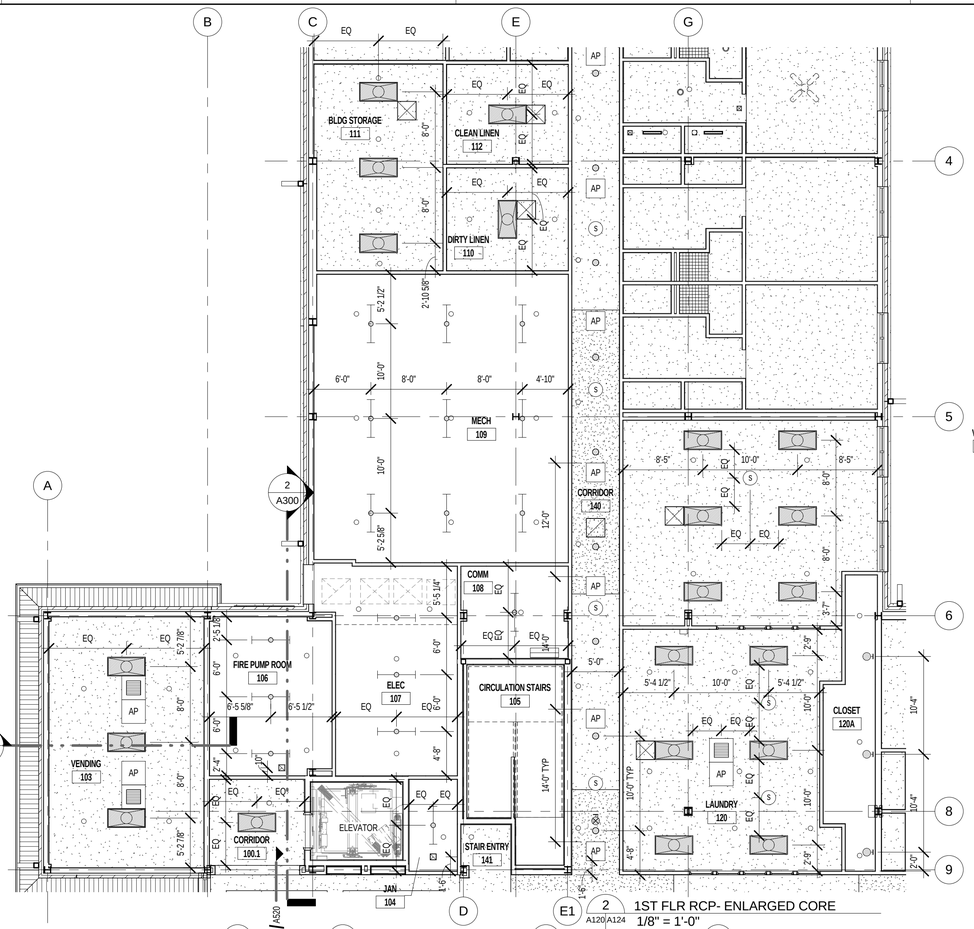

2 A120/A124 1ST FLR RCP- ENLARGED CORE
1/8" = 1'-0"

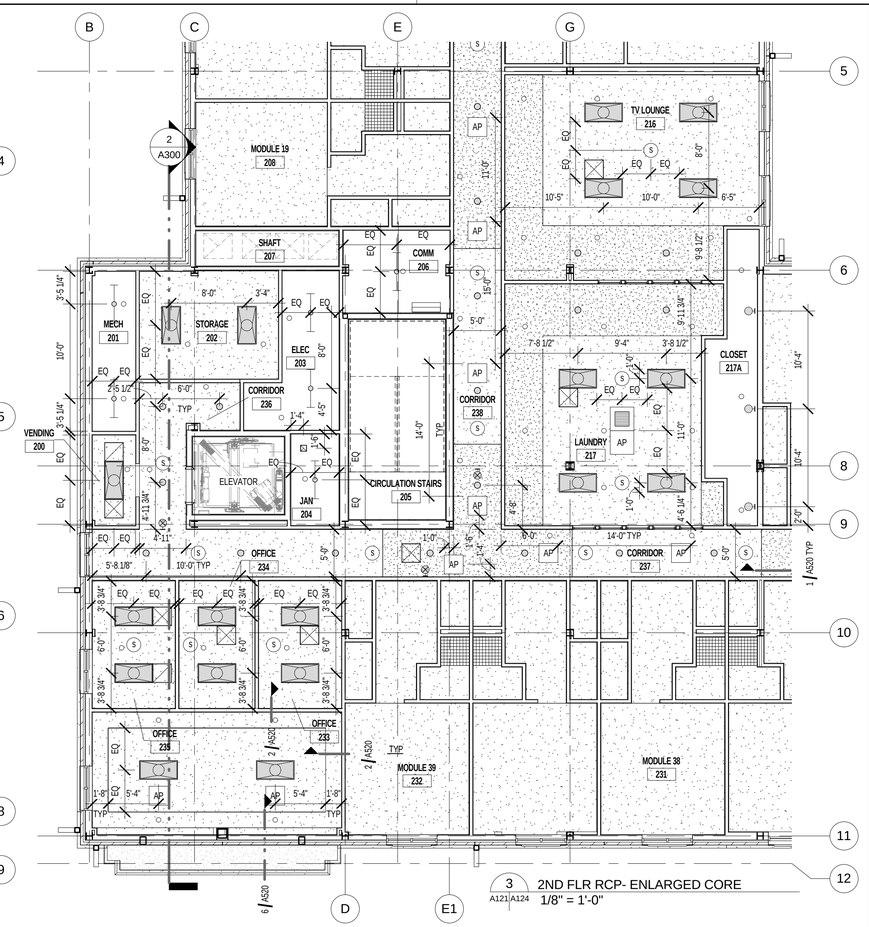

3 A121/A124 2ND FLR RCP- ENLARGED CORE
1/8" = 1'-0"

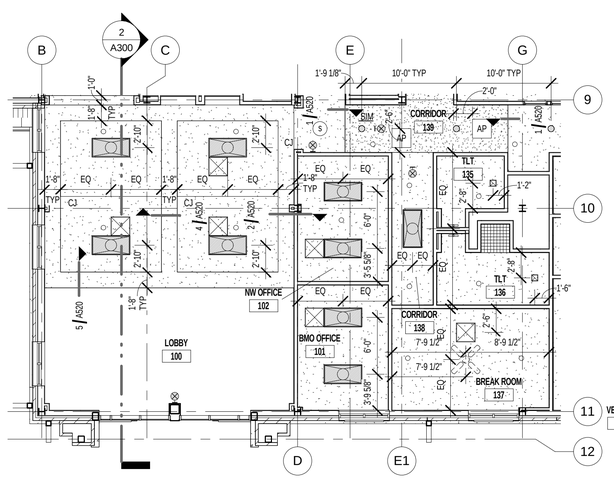

1 A120/A124 1ST FLR RCP- ENLARGED LOBBY AREA
1/8" = 1'-0"

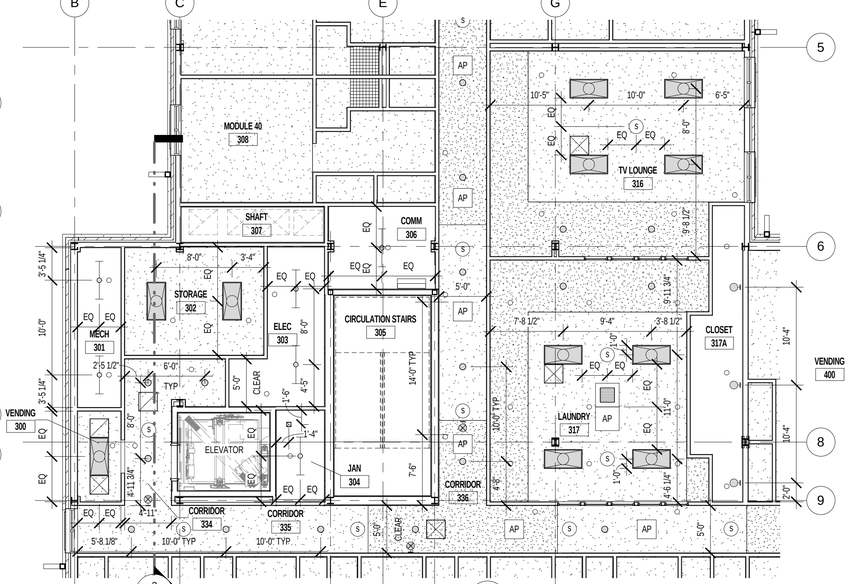

4 A122/A124 3RD FLR RCP- ENLARGED CORE
1/8" = 1'-0"

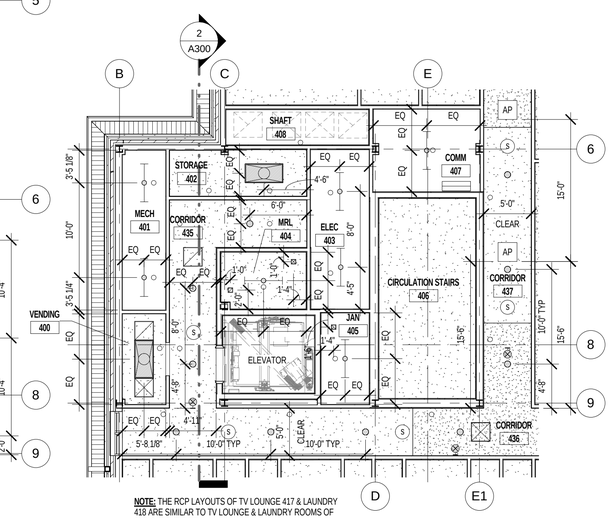

NOTE: THE RCP LAYOUTS OF TV LOUNGE 417 & LAUNDRY 418 ARE SIMILAR TO TV LOUNGE & LAUNDRY ROOMS OF 2ND & 3RD FLOOR .

5 A123/A124 4TH FLR RCP- ENLARGED CORE
1/8" = 1'-0"

0' 4' 8' 16' 32'
SCALE: 1/8" = 1'-0"

SYM	DESCRIPTION	DATE	APPR

NAVFAC

ANDERSON DRACE JOINT VENTURE

REGISTERED ARCHITECT Mark E Lishen 2769 Biloxi, MS STATE OF MISSISSIPPI 1-17-12 SEAL

EGH ARCHITECTS eleyguildhardy.com A/E INFO

APPROVED

FOR COMMANDER NAVFAC

ACTIVITY

SATISFACTORY TO DATE JAN 19, 2012

DES PCW DRW PCW CHK KLK

DEPARTMENT OF THE NAVY
NAVAL FACILITIES ENGINEERING COMMAND SOUTHEAST
IPT GULFCOAST
CORRY STATION

NAVAL FACILITIES ENGINEERING COMMAND
NAVAL AIR STATION JACKSONVILLE, FL
PENSACOLA, FLORIDA

BUILDING P-724 Corry "A" School BEQ
REVISED [2+0] MODULE DESIGN

ENLARGED CORE RCP'S

SCALE: AS INDICATED

EPROJECT NO.: 10-045

CONSTR. CONTR. NO. N69450-10-C-0755

NAVFAC DRAWING NO. 15050417

SHEET 72 OF 204

A124

RCP LEGEND

GYP BOARD	WALL MOUNTED HVAC UNIT- SEE MECH
MTL PANEL SOFFIT	EXHAUST FAN- SEE MECH
EXP STRUCT	EXHAUST FAN- SEE MECH
STUCCO SOFFIT	SUPPLY DIFFUSER- SEE MECH
LIGHT FIXTURE- SEE ELEC	SUPPLY DIFFUSER- SEE MECH
LIGHT FIXTURE- SEE ELEC	SUPPLY DIFFUSER- SEE MECH
LIGHT FIXTURE- SEE ELEC	RETURN GRILLE- SEE MECH
EXIT LIGHT FIXTURE- SEE ELEC	EXHAUST GRILLE- SEE MECH
WALL MOUNTED LIGHT FIXTURE- SEE ELEC	CEILING SPEAKER- SEE TELECOM
WALL MOUNTED LIGHT FIXTURE- SEE ELEC	ACCESS PANEL- SEE TELECOM
LIGHT FIXTURE- SEE ELEC	SIDEWALL SPRINKLER- SEE FIRE PROTECTION
CEILING FAN W/ LIGHT KIT- SEE ELEC	SPRINKLER HEAD- SEE FIRE PROTECTION
CEILING HVAC UNIT- SEE MECH	SMOKE DETECTOR- SEE FIRE PROTECTION
GYP BD ACCESS PANEL- SEE MECH & PLUMB	GYP BD CONTROL JOINT
	CEILING ELEVATION- RELATIVE TO FLR LEVEL

NOTE:

A. GENERAL REFLECTED CEILING PLAN NOTES ARE LOCATED ON SHEET A120.

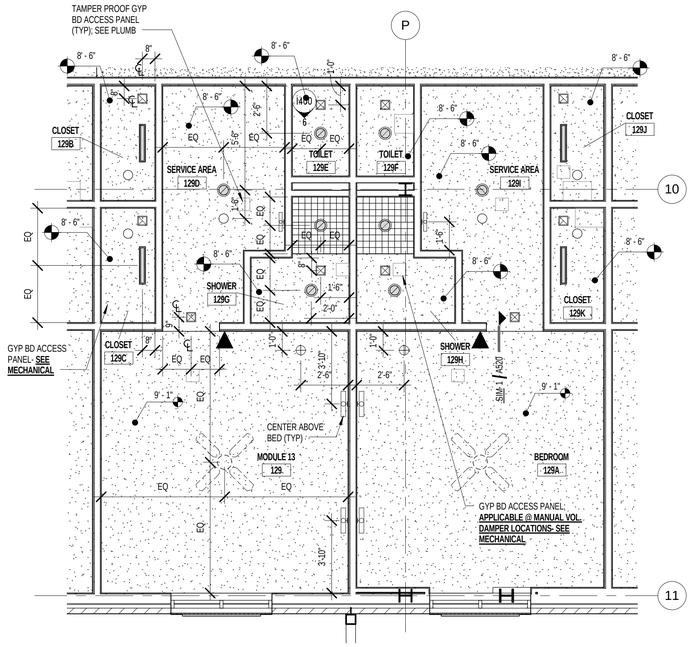

1 ENLARGED MODULE RCP- TYPE A
A120|A125 1/4" = 1'-0"

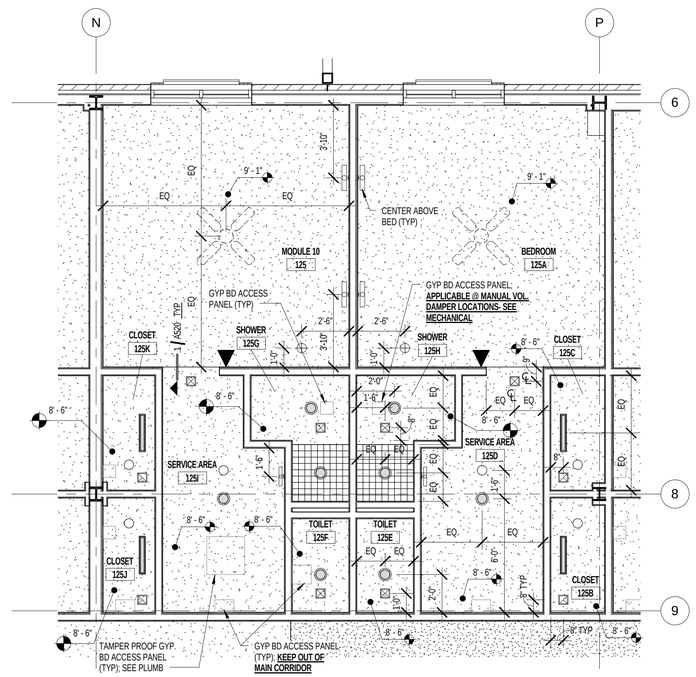

2 ENLARGED MODULE RCP- TYPE B
A120|A125 1/4" = 1'-0"

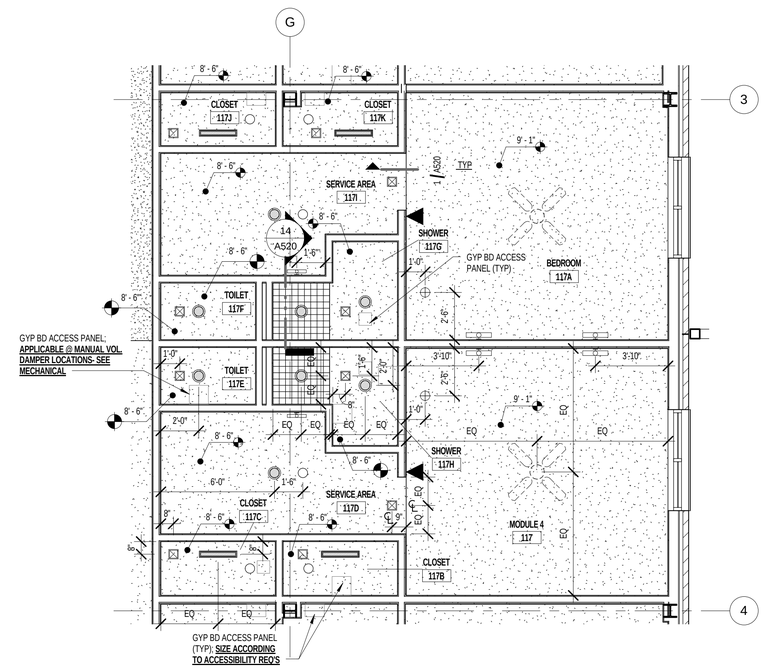

3 ENLARGED MODULE RCP- TYPE C
A120|A125 1/4" = 1'-0"

0' 2' 4' 8' 16'
SCALE: 1/4" = 1'- 0"

SYM	DESCRIPTION	DATE	APPR

NAVFAC

ANDERSON DRACE JOINT VENTURE

REGISTERED ARCHITECT Mark E. Lisher 2769 Biloxi, MS STATE OF MISSISSIPPI 1-17-12 SEAL

EGH ARCHITECTS eleyguildhardy.com A/E INFO

APPROVED

FOR COMMANDER NAVFAC

ACTIVITY

SATISFACTORY TO DATE JAN 19, 2012

DES PCW DRW PCW CHK KLK

DEPARTMENT OF THE NAVY
NAVAL FACILITIES ENGINEERING COMMAND
IPT GULFCOAST
CORRY STATION

NAVAL FACILITIES ENGINEERING COMMAND SOUTHEAST
NAVAL AIR STATION JACKSONVILLE, FL
PENSACOLA, FLORIDA

BUILDING P-724 Corry "A" School BEQ
REVISED [2+0] MODULE DESIGN

ENLARGED MODULE RCP'S

SCALE: AS INDICATED
EPROJECT NO.: 10-045
CONSTR. CONTR. NO. N69450-10-C-0755
NAVFAC DRAWING NO. 15050418
SHEET 73 OF 204

A125

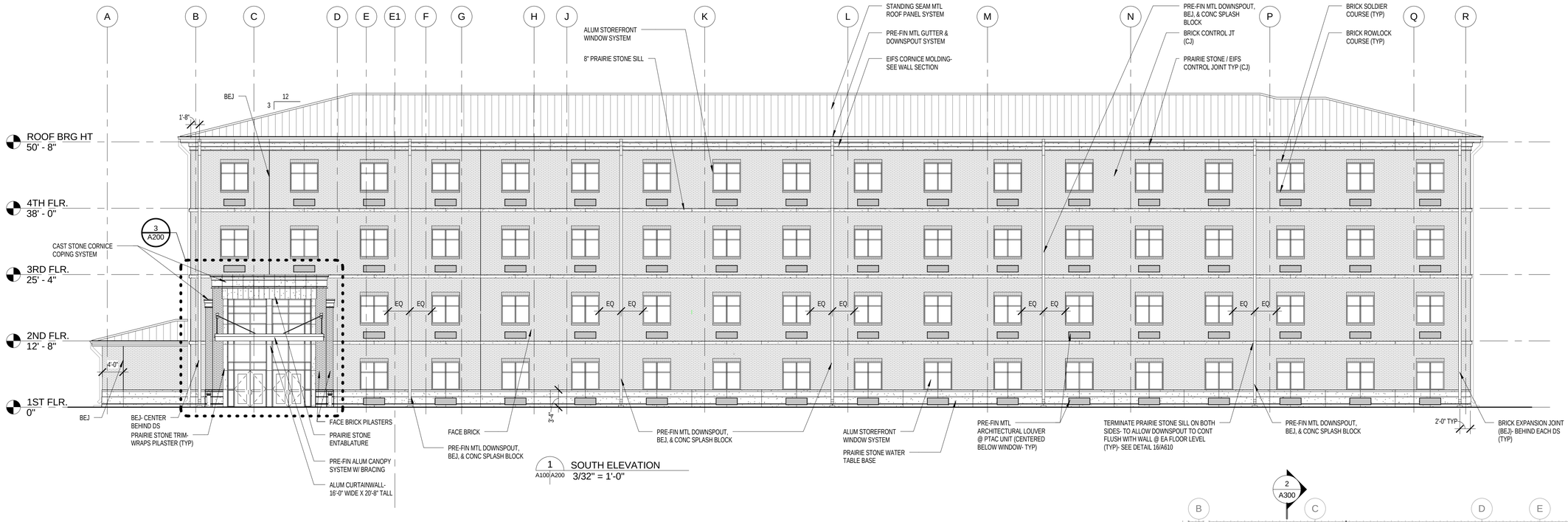

1 A100|A200 SOUTH ELEVATION 3/32" = 1'-0"

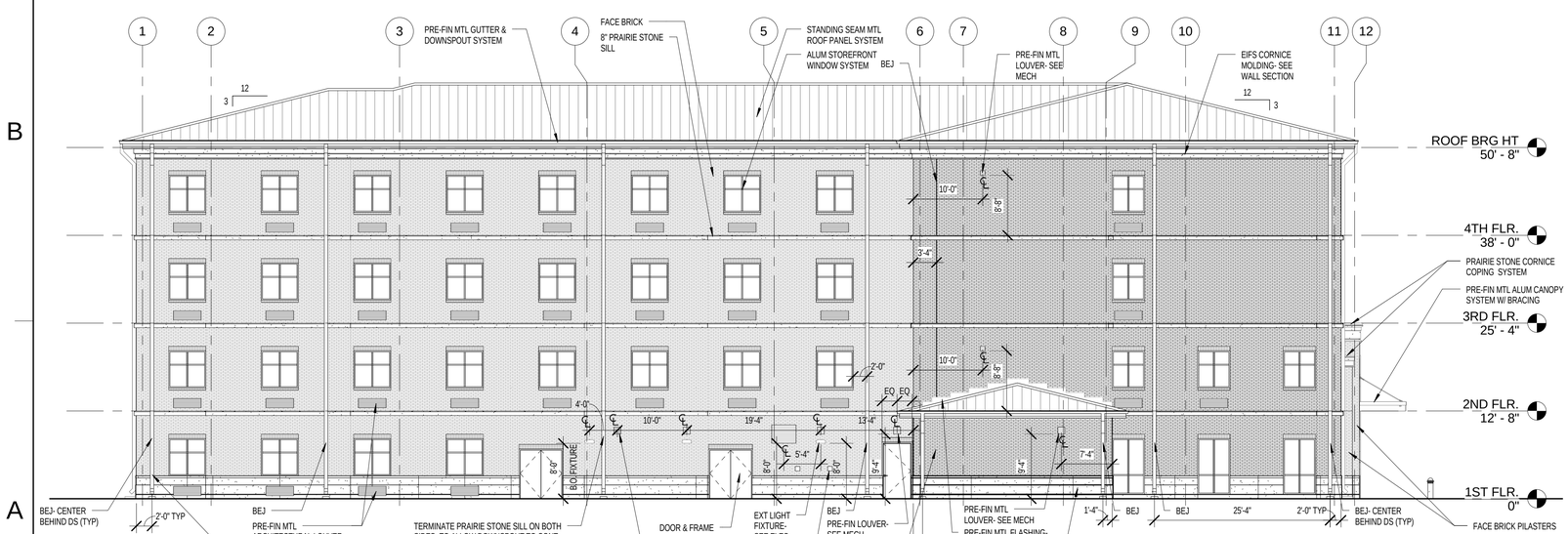

2 A100|A200 WEST ELEVATION 3/32" = 1'-0"

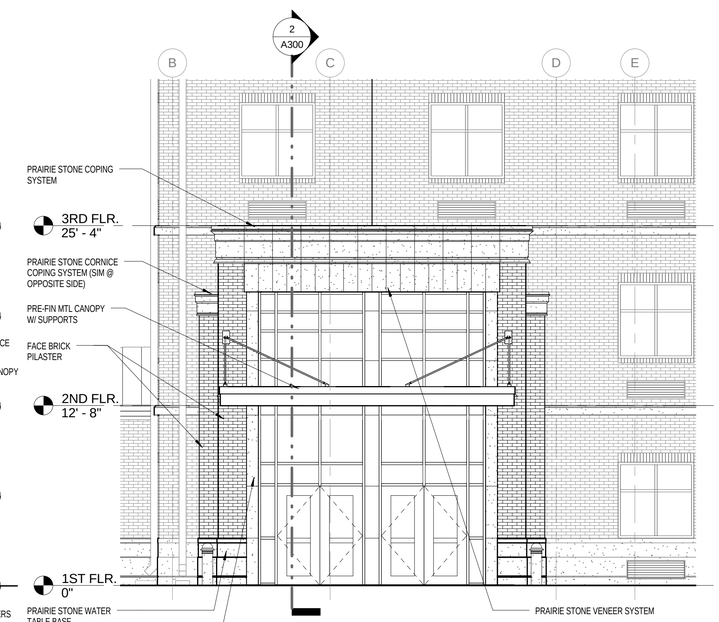

3 A200|A200 SOUTH ELEVATION- ENLARGED ENTRY 3/16" = 1'-0"

SCALE: 3/32"=1'-0"

SCALE: 3/16"=1'-0"

APPR.	DATE	DESCRIPTION	SYM

NAVFAC

ANDERSON DRACE JOINT VENTURE

REGISTERED ARCHITECT Mark E. Lisher 2769 Biloxi, MS STATE OF MISSISSIPPI 1-17-12 SEAL

EGH ARCHITECTS eleyguildhardy.com A/E INFO

APPROVED

FOR COMMANDER NAVFAC

ACTIVITY

SATISFACTORY TO DATE JAN 19, 2012

DES PCW | DRW PCW | CHK KLK

DEPARTMENT OF THE NAVY
NAVAL FACILITIES ENGINEERING COMMAND SOUTHEAST
1P7 GULF-COAST
CORRY STATION

NAVAL FACILITIES ENGINEERING COMMAND
NAVAL AIR STATION JACKSONVILLE, FL
PENSACOLA, FLORIDA

BUILDING P-724 Corry "A" School BEQ
REVISED [2+0] MODULE DESIGN

ELEVATIONS

SCALE: AS INDICATED

EPROJECT NO.: 10-045

CONSTR. CONTR. NO. N69450-10-C-0755

NAVFAC DRAWING NO. 15050419

SHEET 74 OF 204

A200

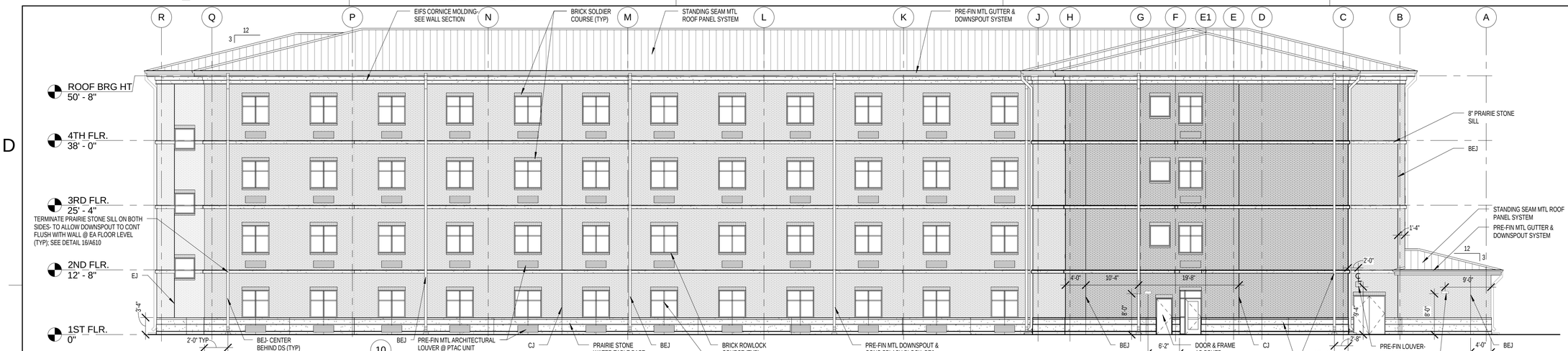

1 NORTH ELEVATION
A100|A201 3/32" = 1'-0"

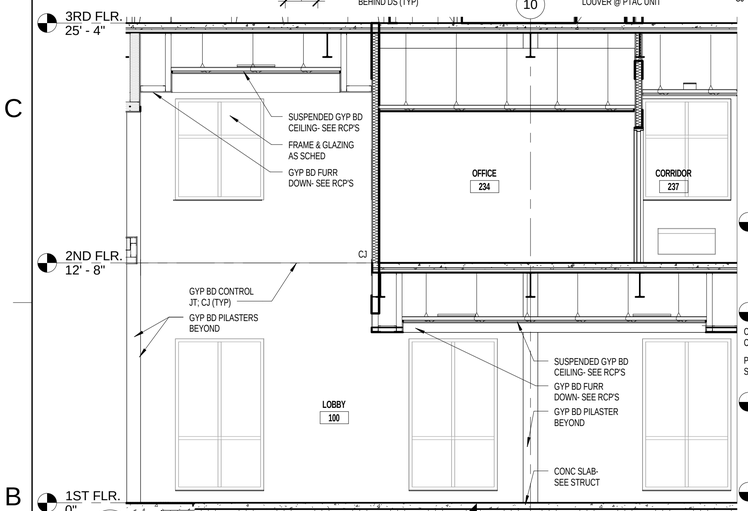

4 INTERIOR ELEVATION- LOBBY (WEST)
A100|A201 1/4" = 1'-0"

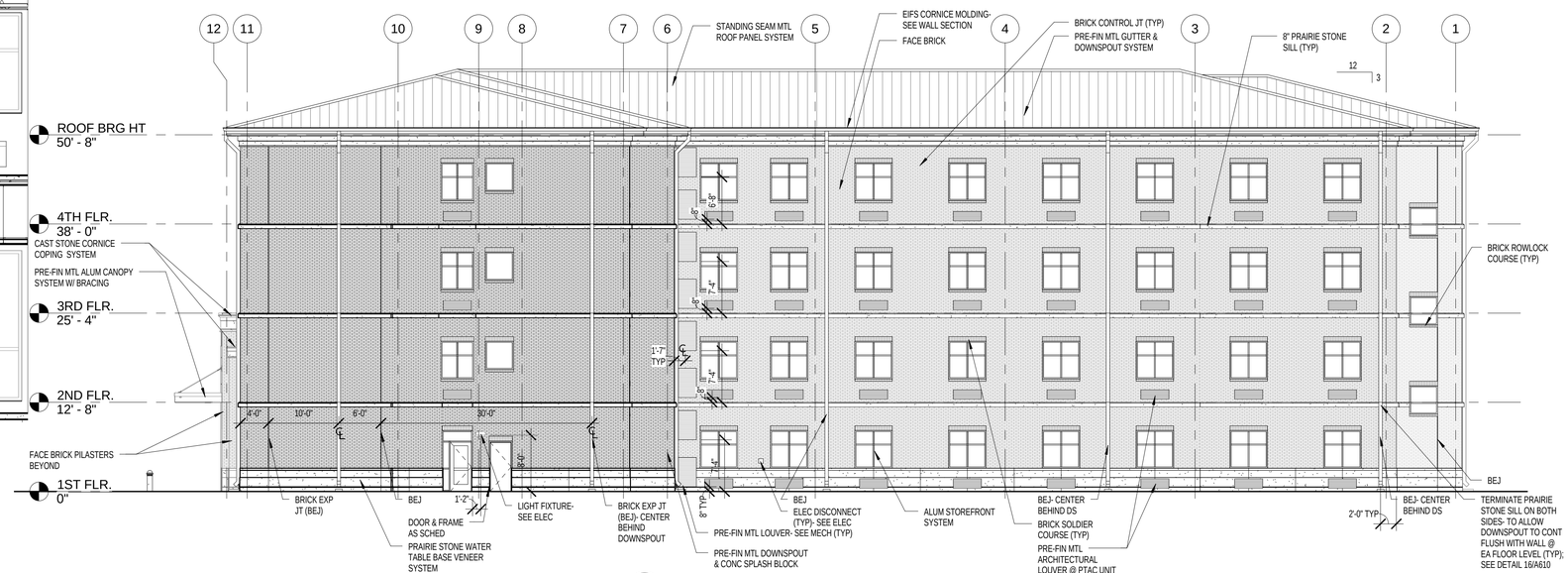

2 EAST ELEVATION
A100|A201 3/32" = 1'-0"

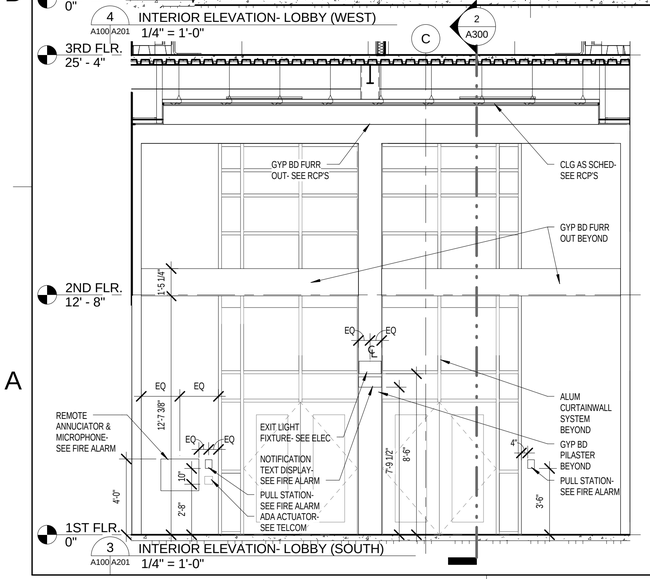

3 INTERIOR ELEVATION- LOBBY (SOUTH)
A100|A201 1/4" = 1'-0"

0' 4' 8' 16' 32'
SCALE: 3/32"=1'-0"

0' 2' 4' 8' 16'
SCALE: 1/4" = 1'- 0"

SYM	DESCRIPTION	DATE	APPR

NAVFAC

ANDERSON DRACE JOINT VENTURE

REGISTERED ARCHITECT Mark E. Lisher 2769 Biloxi, MS STATE OF MISSISSIPPI 1-17-12 SEAL

EGH ARCHITECTS eleyguildhardy.com A/E INFO

APPROVED

FOR COMMANDER NAVFAC

ACTIVITY

SATISFACTORY TO DATE JAN 19, 2012

DES PCW DRW PCW CHK KLK

DEPARTMENT OF THE NAVY
NAVAL FACILITIES ENGINEERING COMMAND SOUTHEAST
IPT GULFCOAST
CORRY STATION

NAVAL FACILITIES ENGINEERING COMMAND
NAVAL AIR STATION JACKSONVILLE, FL
PENSACOLA, FLORIDA

BUILDING P-724 Corry "A" School BEQ
REVISED [2+0] MODULE DESIGN

ELEVATIONS

SCALE: AS INDICATED

EPROJECT NO.: 10-045

CONSTR. CONTR. NO.
N69450-10-C-0755

NAVFAC DRAWING NO.
15050420

SHEET 75 OF 204

A201

1 A100|A300 BUILDING SECTION- TYPICAL
1/8" = 1'-0"

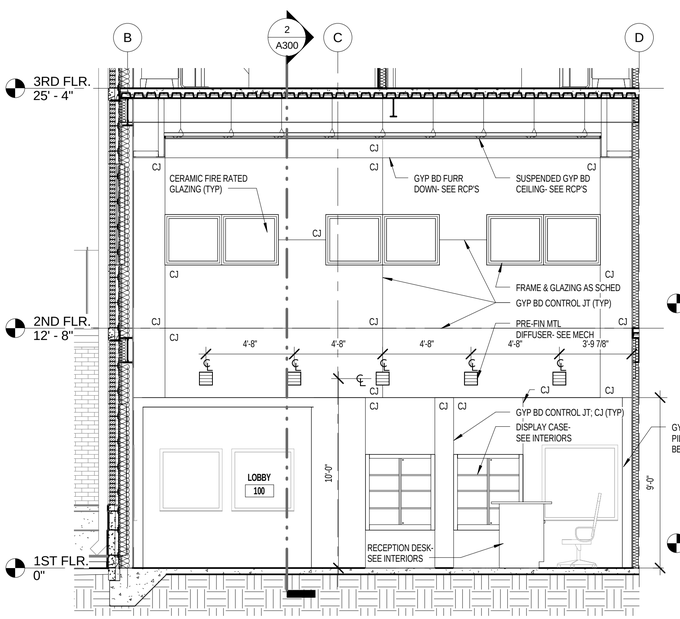

4 A100|A300 INTERIOR ELEVATION- LOBBY (NORTH)
1/4" = 1'-0"

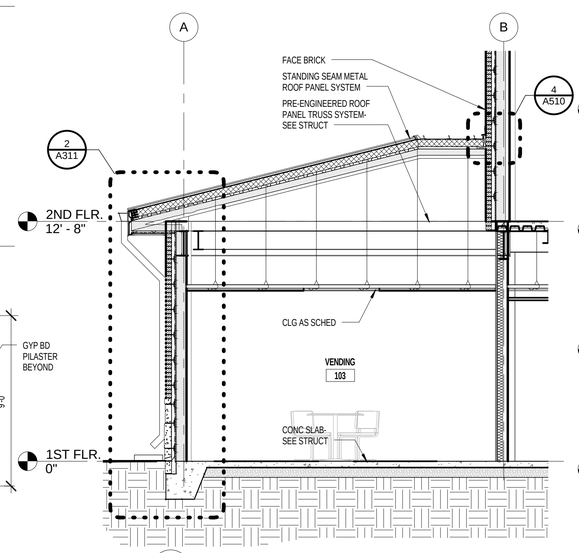

3 A100|A300 BUILDING SECTION- THRU VENDING
1/4" = 1'-0"

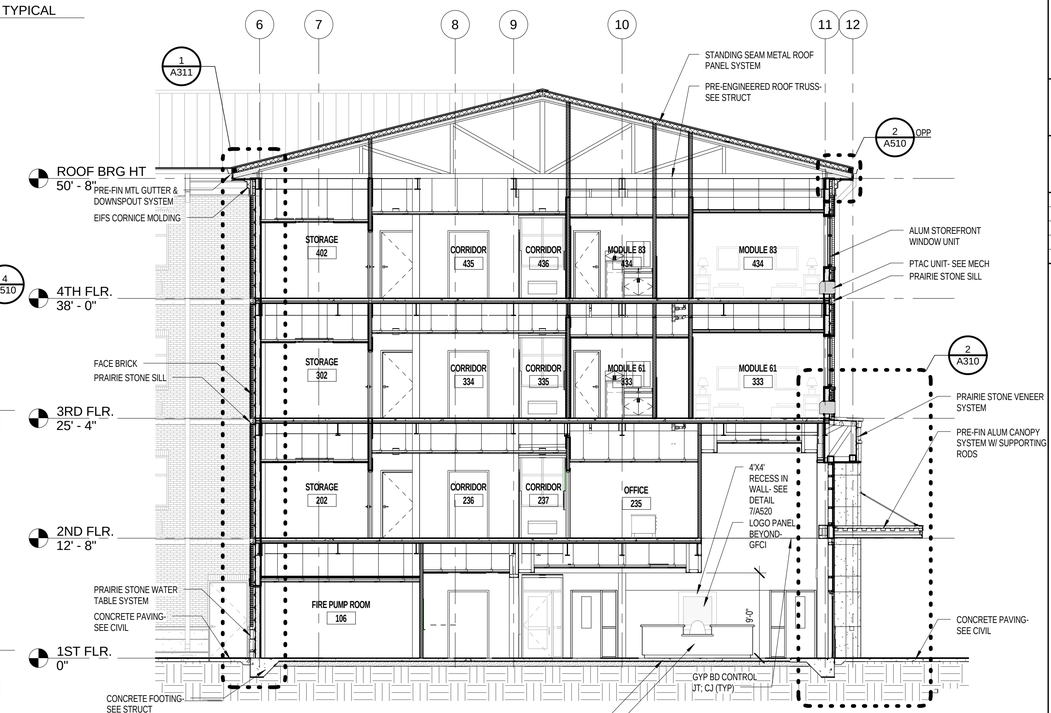

2 A100|A300 BUILDING SECTION- THRU ENTRY LOBBY
1/8" = 1'-0"

0' 4' 8' 16' 32'
SCALE: 1/8" = 1'-0"

0' 2' 4' 8' 16'
SCALE: 1/4" = 1'- 0"

SYM	DESCRIPTION	DATE	APPR

NAVFAC

ANDERSON DRACE JOINT VENTURE

REGISTERED ARCHITECT Mark E. Lisher 2769 Biloxi, MS STATE OF MISSISSIPPI
1-19-12
SEAL

EGH ARCHITECTS
eleyguildhardy.com
A/E INFO

APPROVED
FOR COMMANDER NAVFAC
ACTIVITY
SATISFACTORY TO DATE JAN 19, 2012

DES	DRW	CHK
PCW	PCW	KLK

DEPARTMENT OF THE NAVY
NAVAL FACILITIES ENGINEERING COMMAND SOUTHEAST
PT GULFCOAST
CORRY STATION

NAVAL FACILITIES ENGINEERING COMMAND
NAVAL AIR STATION, JACKSONVILLE, FL
PENSACOLA, FLORIDA

BUILDING P-724 Corry "A" School BEQ
REVISED [2+0] MODULE DESIGN

BUILDING SECTIONS

SCALE: AS INDICATED
EPROJECT NO.: 10-045
CONSTR. CONTR. NO. N69450-10-C-0755
NAVFAC DRAWING NO. 15050421
SHEET 76 OF 204

A300

SYM	DESCRIPTION	DATE	APPR

NAVFAC

ANDERSON DRACE JOINT VENTURE

REGISTERED ARCHITECT Mark E. Lishen 2769 Biloxi, MS STATE OF MISSISSIPPI 1-17-12 SEAL

EGH ARCHITECTS eleyguildhardy.com A/E INFO

APPROVED

FOR COMMANDER NAVFAC

ACTIVITY

SATISFACTORY TO DATE JAN 19, 2012

DES PCW DRW PCW CHK KLK

DEPARTMENT OF THE NAVY
NAVAL FACILITIES ENGINEERING COMMAND SOUTHEAST
NAVAL FACILITIES ENGINEERING COMMAND
NAVAL AIR STATION, JACKSONVILLE, FL
PT GULF-COAST
CORRY STATION
PENSACOLA, FLORIDA

BUILDING P-724 Corry "A" School BEQ
REVISED [2+0] MODULE DESIGN

WALL SECTIONS

SCALE: AS INDICATED
EPROJECT NO.: 10-045
CONSTR. CONTR. NO. N69450-10-C-0755
NAVFAC DRAWING NO. 15050422
SHEET 77 OF 204

A310

3 A100/A311 WALL SECTION- EXIT @ 1ST FLR CORRIDOR (TYP) 3/4" = 1'-0"

2 A300/A311 WALL SECTION- @ VENDING 3/4" = 1'-0"

1 A300/A311 WALL SECTION- TYP THRU BRICK 3/4" = 1'-0"

SYM	DESCRIPTION	DATE	APPR

NAVFAC

ANDERSON DRACE JOINT VENTURE

REGISTERED ARCHITECT Mark E. Lisher 2769 Biloxi, MS STATE OF MISSISSIPPI 1-17-12 SEAL

EGH ARCHITECTS eleyguildhardy.com A/E INFO

APPROVED

FOR COMMANDER NAVFAC

ACTIVITY

SATISFACTORY TO DATE JAN 19, 2012

DES	PDW	DRW	PDW	CHK	KLK

DEPARTMENT OF THE NAVY
NAVAL FACILITIES ENGINEERING COMMAND SOUTHEAST
P.O. BOX 10068 JACKSONVILLE, FL 32232-0019

NAVAL FACILITIES ENGINEERING COMMAND
NAVAL AIR STATION JACKSONVILLE, FL
CORRY STATION
PENSACOLA, FLORIDA

BUILDING P-724 Corry "A" School BEQ
REVISED [2+0] MODULE DESIGN

WALL SECTIONS

SCALE: AS INDICATED

EPROJECT NO.: 10-045

CONSTR. CONTR. NO.
N69450-10-C-0755

NAVFAC DRAWING NO.
15050423

SHEET 78 OF 204

A311

NOTE:
- SEE WALL SECTIONS FOR NOTATIONS FOR NOTATIONS NOT NOTED

2 A332/A330 STAIR SECTION- SE FIRE STAIR 2
3/8" = 1'-0"

3 A332/A330 STAIR SECTION- SE FIRE STAIR 1
3/8" = 1'-0"

SYM	DESCRIPTION	DATE	APPR

NAVFAC

ANDERSON DRACE JOINT VENTURE

REGISTERED ARCHITECT
Mark E. Lisher
2769
Biloxi, MS
STATE OF MISSISSIPPI
1-17-12
SEAL

EGH ARCHITECTS
eleyguildhardy.com
A/E INFO

APPROVED

FOR COMMANDER NAVFAC

ACTIVITY

SATISFACTORY TO DATE JAN 19, 2012

DES PCW DRW TAA CHK KLK

DEPARTMENT OF THE NAVY
NAVAL FACILITIES ENGINEERING COMMAND SOUTHEAST
IPT GULF-COAST
NAVAL FACILITIES ENGINEERING COMMAND
NAVAL AIR STATION JACKSONVILLE, FL
CORRY STATION
PENSACOLA, FLORIDA
BUILDING P-724 Corry "A" School BEQ
REVISED [2+0] MODULE DESIGN
STAIR SECTIONS

SCALE: AS INDICATED
EPROJECT NO.: 10-045
CONSTR. CONTR. NO.
N69450-10-C-0755
NAVFAC DRAWING NO.
15050424
SHEET 79 OF 204
A330

NOTE:
- SEE WALL SECTIONS FOR NOTATIONS NOT NOTED

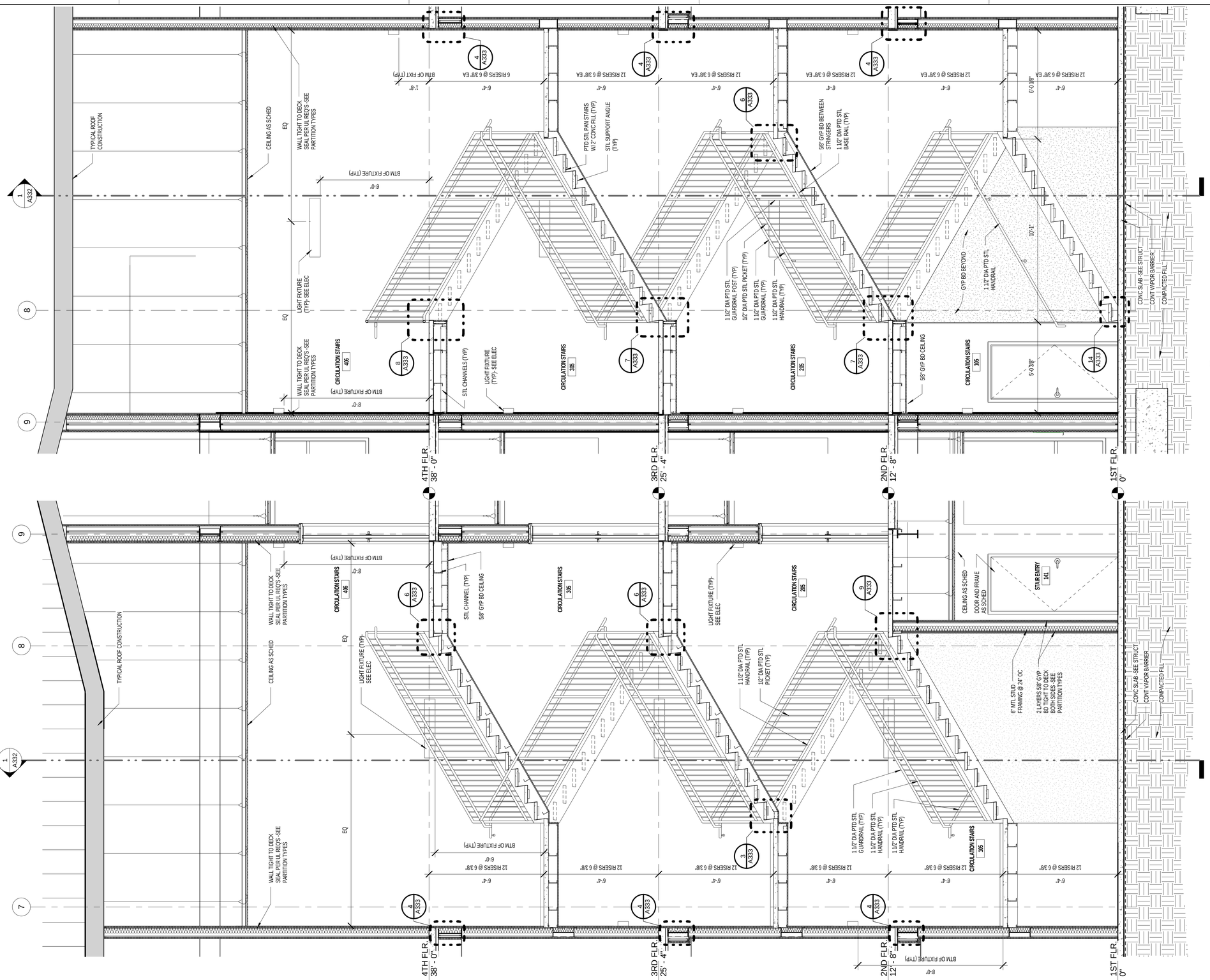

SYM	DESCRIPTION	DATE	APPR

NAVFAC

ANDERSON DRACE JOINT VENTURE

REGISTERED ARCHITECT Mark E. Lishen 2769 Biloxi, MS STATE OF MISSISSIPPI 1-19-12 SEAL

EGH ARCHITECTS eleyguildhardy.com A/E INFO

APPROVED

FOR COMMANDER NAVFAC

ACTIVITY

SATISFACTORY TO DATE JAN 19, 2012

DES PCW DRW TAA CHK KLK

DEPARTMENT OF THE NAVY
NAVAL FACILITIES ENGINEERING COMMAND SOUTHEAST
IPT GULF-COAST
NAVAL FACILITIES ENGINEERING COMMAND
NAVAL AIR STATION JACKSONVILLE, FL
CORRY STATION
PENSACOLA, FLORIDA

BUILDING P-724 Corry "A" School BEQ
REVISED [2+0] MODULE DESIGN

STAIR SECTIONS

SCALE: AS INDICATED

EPROJECT NO.: 10-045

CONSTR. CONTR. NO.
N69450-10-C-0755

NAVFAC DRAWING NO.
15050425

SHEET 80 OF 204

A331

SYM	DESCRIPTION	DATE	APPR

NAVFAC

ANDERSON DRACE JOINT VENTURE

REGISTERED ARCHITECT Mark E. Lisher 2769 Biloxi, MS STATE OF MISSISSIPPI 1-17-12 SEAL

EGH ARCHITECTS eleyguildhardy.com A/E INFO

APPROVED

FOR COMMANDER NAVFAC

ACTIVITY

SATISFACTORY TO DATE JAN 19, 2012

DES PCW DRW TAA CHK KLK

DEPARTMENT OF THE NAVY
NAVAL FACILITIES ENGINEERING COMMAND SOUTHEAST
IPT GULFCOAST
CORRY STATION

NAVAL FACILITIES ENGINEERING COMMAND
NAVAL AIR STATION JACKSONVILLE, FL
PENSACOLA, FLORIDA

BUILDING P-724 Corry "A" School BEQ
REVISED [2+0] MODULE DESIGN
STAIR/ELEVATOR SECTIONS

SCALE: AS INDICATED

EPROJECT NO.: 10-045

CONSTR. CONTR. NO.
N69450-10-C-0755

NAVFAC DRAWING NO.
15050426

SHEET 81 OF 204

A332

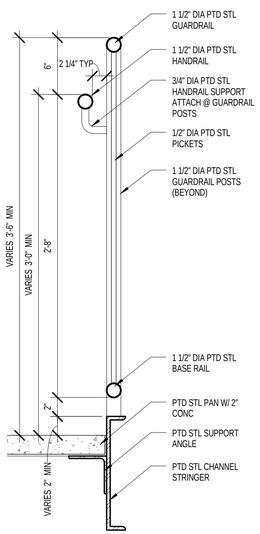

1 TYPICAL HANDRAIL AND GUARDRAIL DETAIL
A332|A333 1 1/2" = 1'-0"

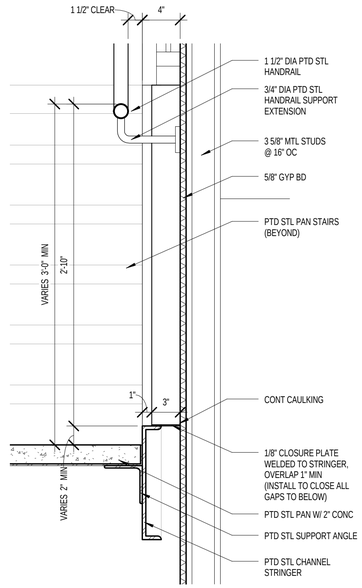

2 HANDRAIL AND BOTTOM LEVEL DETAIL
A332|A333 1 1/2" = 1'-0"

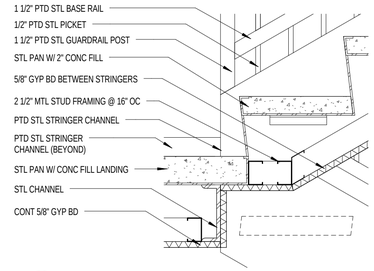

3 STRINGER TO LANDING DETAIL W/ GYP OPP (TYP)
A331|A333 1 1/2" = 1'-0"

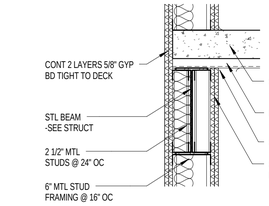

4 CIRCULATION STAIR / COMM BEAM FURROUT (TYP)
A331|A333 1" = 1'-0"

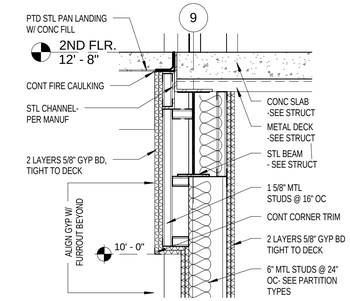

5 FIRE STAIR BEAM FURROUT DETAIL (TYP)
A330|A333 1" = 1'-0"

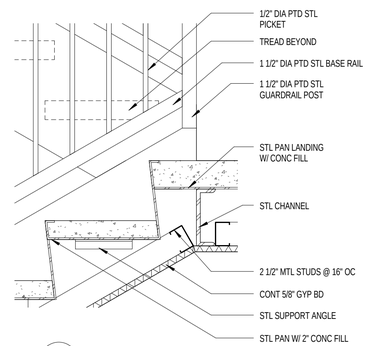

6 STRINGER TO LANDING DETAIL W/ GYP (TYP)
A331|A333 1 1/2" = 1'-0"

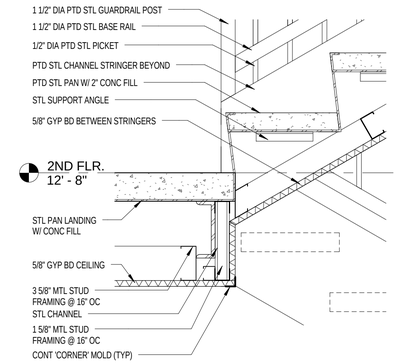

7 STRINGER TO SLAB DETAIL W/ GYP OPP (TYP)
A331|A333 1 1/2" = 1'-0"

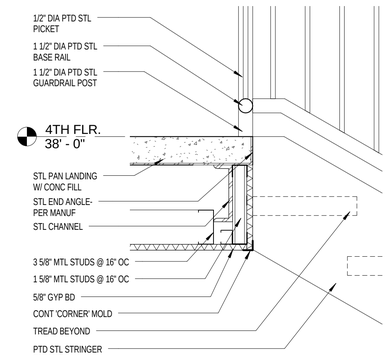

8 TOP SLAB TO STRINGER DETAIL W/ GYP (TYP)
A331|A333 1 1/2" = 1'-0"

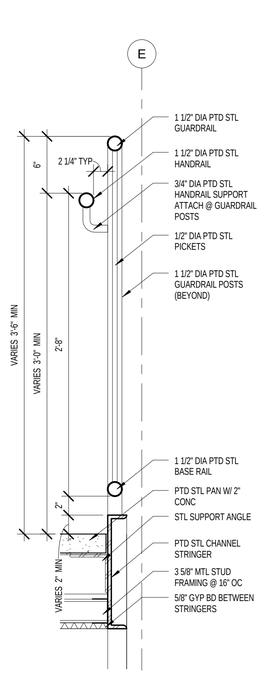

13 TYPICAL HANDRAIL AND GUARDRAIL W/ GYP DETAIL
A332|A333 1 1/2" = 1'-0"

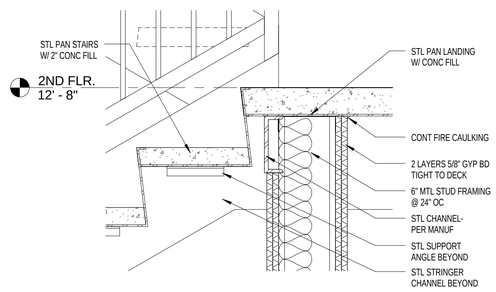

9 STRINGER TO SLAB @ FIRE WALL DETAIL
A331|A333 1 1/2" = 1'-0"

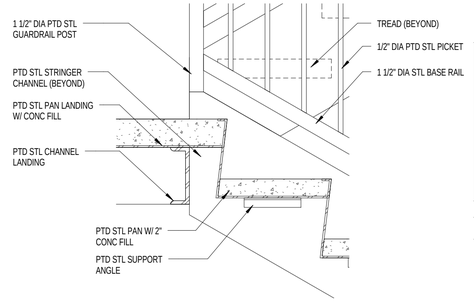

10 STRINGER TO LANDING DETAIL (TYP)
A330|A333 1 1/2" = 1'-0"

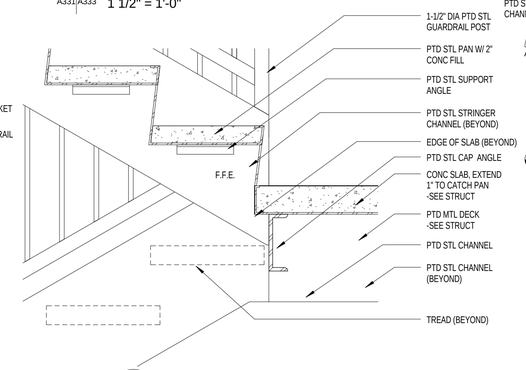

11 STRINGER TO SLAB DETAIL OPP (TYP)
A330|A333 1 1/2" = 1'-0"

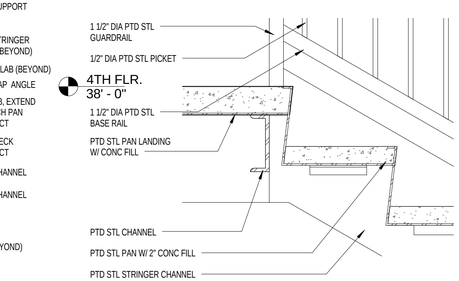

12 TOP SLAB TO STRINGER DETAIL (TYP)
A330|A333 1 1/2" = 1'-0"

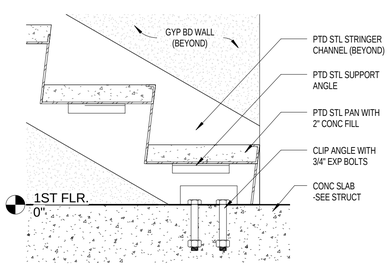

14 STRINGER TO FLOOR DETAIL (TYP)
A330|A333 1 1/2" = 1'-0"

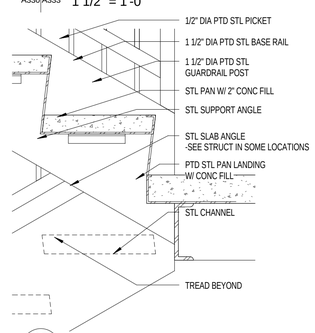

15 STRINGER TO LANDING DETAIL 0PP (TYP)
A330|A333 1 1/2" = 1'-0"

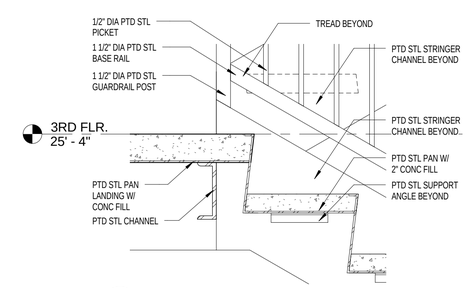

16 STRINGER TO SLAB DETAIL (TYP)
A330|A333 1 1/2" = 1'-0"

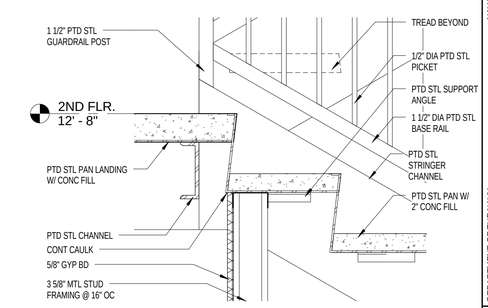

17 STRINGER TO SLAB DETAIL W/ GYP WALL (TYP)
A330|A333 1 1/2" = 1'-0"

NOTE:

A. ALL EXPOSED STEEL, NOT COVERED BY GYP BD OR ANY OTHER FINISHES, TO BE PAINTED AS SCHEDULED.

0' 1' 2' 3'
SCALE: 1" = 1'-0"

0' 1' 2'
SCALE: 1 1/2" = 1'-0"

SYM	DESCRIPTION	DATE	APPR

NAVFAC

ANDERSON DRACE JOINT VENTURE

REGISTERED ARCHITECT Mark E. Lisher 2769 Biloxi, MS STATE OF MISSISSIPPI 1-17-12 SEAL

EGH ARCHITECTS eleyguildhardy.com A/E INFO

APPROVED

FOR COMMANDER NAVFAC

ACTIVITY

SATISFACTORY TO DATE JAN 19, 2012

DES	PDW	DRW	TAA	CHK	KLK

DEPARTMENT OF THE NAVY
NAVAL FACILITIES ENGINEERING COMMAND
NAVAL FACILITIES ENGINEERING COMMAND SOUTHEAST
NAVAL AIR STATION JACKSONVILLE, FL
PT GULF-FCOAST
CORRY STATION
PENSACOLA, FLORIDA

BUILDING P-724 Corry "A" School BEQ
REVISED [2+0] MODULE DESIGN

STAIR DETAILS

SCALE: AS INDICATED
EPROJECT NO.: 10-045
CONSTR. CONTR. NO. N69450-10-C-0755
NAVFAC DRAWING NO. 15050427
SHEET 82 OF 204

A333

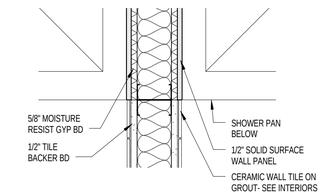

7 A400|A400 JAMB DETAIL- SHOWER 1 1/2" = 1'-0"

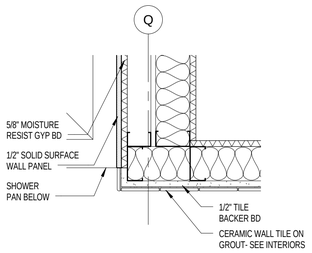

10 A400|A400 JAMB DETAIL- SHOWER (OPP. SIDE) 1 1/2" = 1'-0"

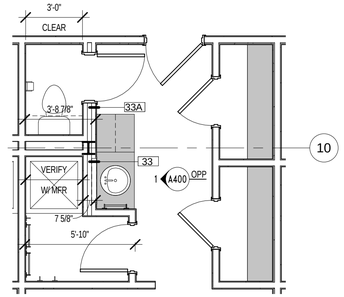

8 A100|A400 DIMENSIONAL MODULE PLAN 1 1/4" = 1'-0"

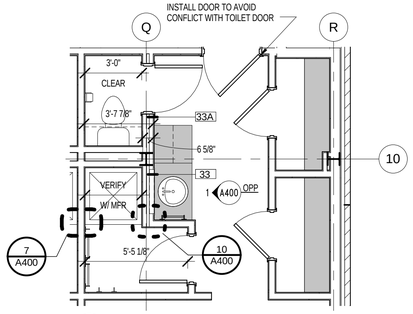

9 A100|A400 DIMENSIONAL MODULE PLAN 2 1/4" = 1'-0"

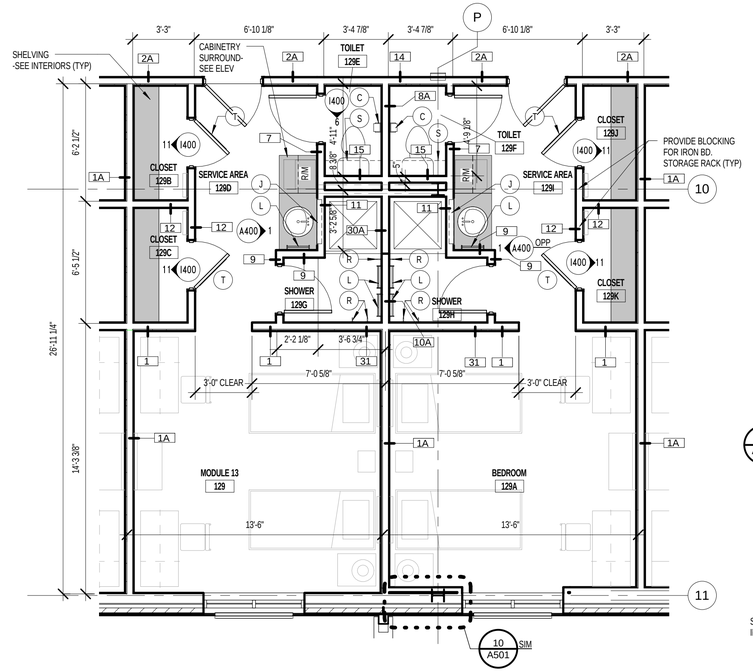

2 A100|A400 1ST FLR- ENLARGED MODULE- TYPE A 1/4" = 1'-0"

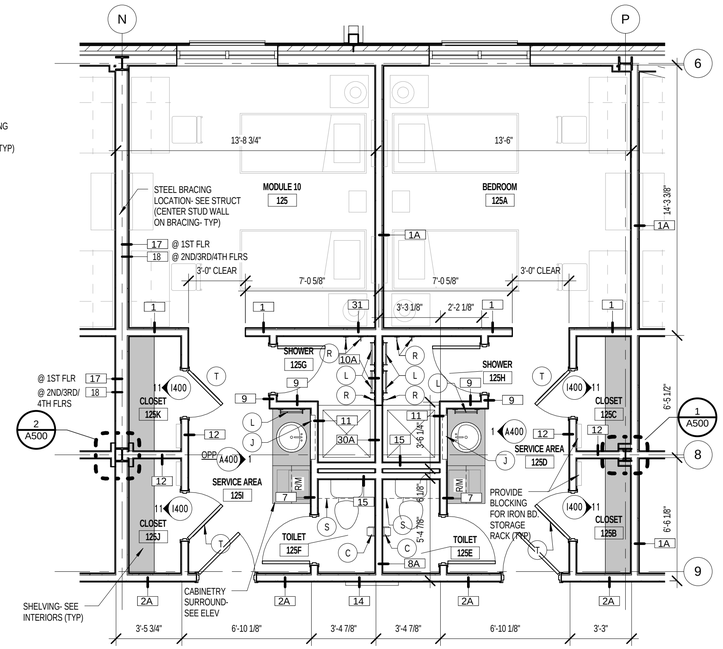

3 A100|A400 1ST FLR- ENLARGED MODULE- TYPE B 1/4" = 1'-0"

NOTE: PLAN ACCESSORIES ARE TYPICAL PER JANITOR ROOM @ EACH FLOOR.

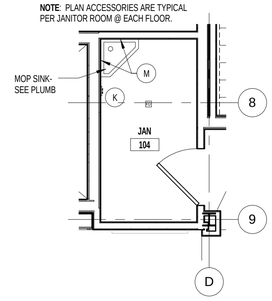

6 A104|A400 1ST FLR- ENLARGED PLAN- JANITOR 1/4" = 1'-0"

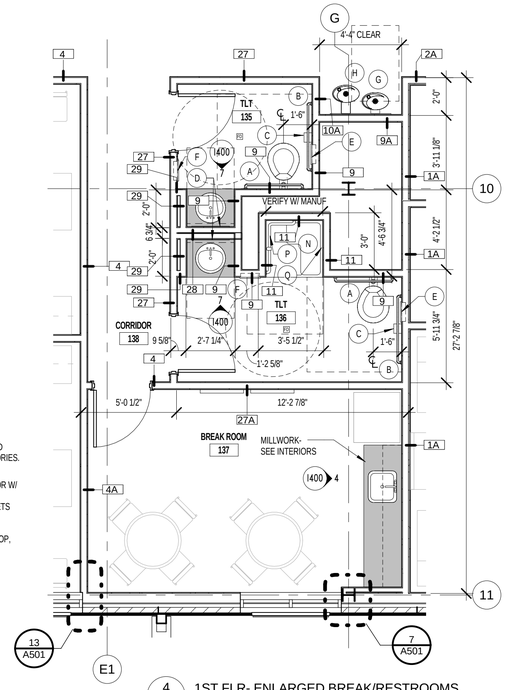

4 A100|A400 1ST FLR- ENLARGED BREAK/RESTROOMS 1/4" = 1'-0"

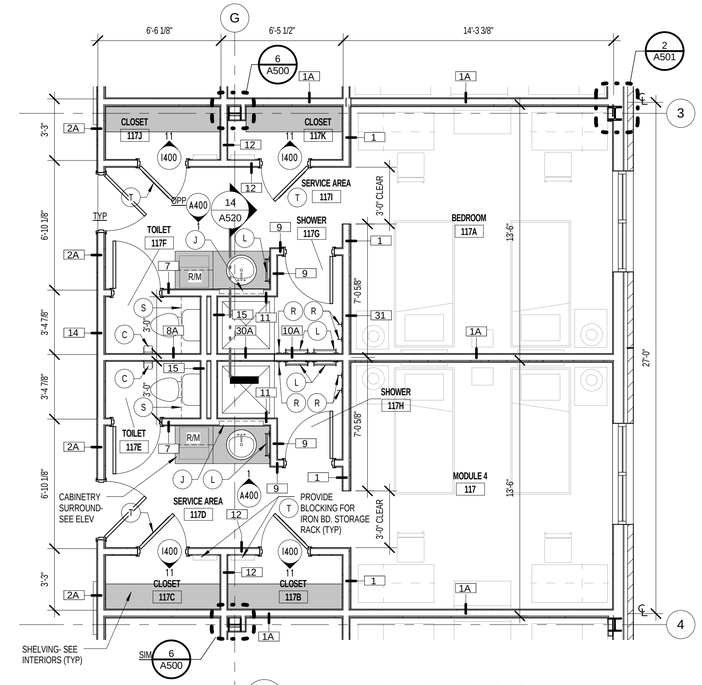

5 A100|A400 1ST FLR- ENLARGED MODULE- TYPE C 1/4" = 1'-0"

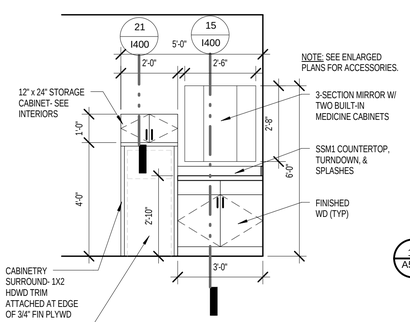

1 A400|A400 VANITY- REVISED 3/8" = 1'-0"

PLAN ACCESSORY SCHEDULE:

SYMBOL	ACCESSORY	MOUNTING HEIGHT	NOTES
A	36" GRAB BAR (REAR OF WC)	33-36" AFF	---
B	42" GRAB BAR (SIDE OF WC)	33-36" AFF	---
C	TOILET PAPER DISPENSER	28" AFF (19" CL AFF MIN)	---
D	MIRROR A	40" AFF MAX TO BTM OF MIRROR	2
E	SANITARY NAPKIN DISPOSAL	34" AFF TO TOP (ABA 31" TO TOP)	---
F	WASTE RECEPTACLE/ PAPER TOWEL	SEMI-RECESSED MOUNTED	1
G	ELECTRIC DRINKING FOUNTAIN	42" AFF TO SPOUT	---
H	ELECTRIC DRINKING FOUNTAIN- ABA COMPLIANT	36" AFF TO SPOUT	---
J	DOUBLE MEDICINE CABINET W/ THREE SECTION MIRROR	RECESSED MOUNTED	2
K	36" MOP HOLDER WITH SHELF	WALL MOUNTED, 4'-0" AFF	---
L	TOWEL BAR		---
M	STAINLESS STEEL SPLASH GUARD	WALL MOUNTED, 4'-0" AFF TO TOP	---
N	COLLAPSIBLE SEAT - ABA COMPLIANT	WALL MOUNTED, 1'-7" AFF MAX TO TOP	
P	L-SHAPED GRAB BAR - ABA COMPLIANT	38-42" AFF	
Q	SHOWER SPRAY UNIT & BAR - ABA COMPLIANT	---	3
R	ROBE HOOK	WALL MOUNTED	---
S	STORAGE CABINET	WALL MOUNTED ABOVE TOILET	
T	MIRROR- FULL HEIGHT	DOOR MOUNTED	

NOTES:

1. MOUNT PAPER TOWEL DISPENSER AND TRASH RECEPTACLE TO MEET ABA. MOUNT HIGHEST OPERABLE PART OF CONTROLS, DISPENSERS, RECEPTACLES, AND OTHER OPERABLE EQUIPMENT 48" MAX.

2. ATTACH MIRROR AS REQ'D; CENTER MIRROR W/ LAVATORY BELOW.

3. VERTICAL BAR SHALL BE INSTALLED SO AS TO NOT OBSTRUCT THE USE OF THE GRAB BARS; MOUNT PER MANUF REQ'S FOR ABA COMPLIANCY. SEE MECH FOR SHOWER SPRAY UNIT FIXTURE.

GENERAL NOTES:

1. THIS LEGEND APPLIES TO ENLARGED PLANS ON SHEET A400.

2. VERIFY ALL MOUNTING HEIGHTS WITH CODES AND MANUFACTURER.

SYM	DESCRIPTION	DATE	APPR.

NAVFAC

ANDERSON DRACE JOINT VENTURE

REGISTERED ARCHITECT Mark E. Lisher 2769 Biloxi, MS STATE OF MISSISSIPPI 1-17-12 SEAL

EGH ARCHITECTS eleyguildhardy.com A/E INFO

APPROVED

FOR COMMANDER NAVFAC

ACTIVITY

SATISFACTORY TO DATE JAN 19, 2012

DES PDW DRW PDW CHK KLK

DEPARTMENT OF THE NAVY
NAVAL FACILITIES ENGINEERING COMMAND
PT GULF/COAST
CORRY STATION

NAVAL FACILITIES ENGINEERING COMMAND SOUTHEAST
NAVAL AIR STATION JACKSONVILLE, FL
PENSACOLA, FLORIDA

BUILDING P-724 Corry "A" School BEQ
REVISED [2+0] MODULE DESIGN

ENLARGED MODULE PLANS/PLANS

SCALE: AS INDICATED

EPROJECT NO.: 10-045

CONSTR. CONTR. NO. N69450-10-C-0755

NAVFAC DRAWING NO. 15050428

SHEET 83 OF 204

A400

0' 2' 4' 8' 16'

SCALE: 1/4" = 1'- 0"

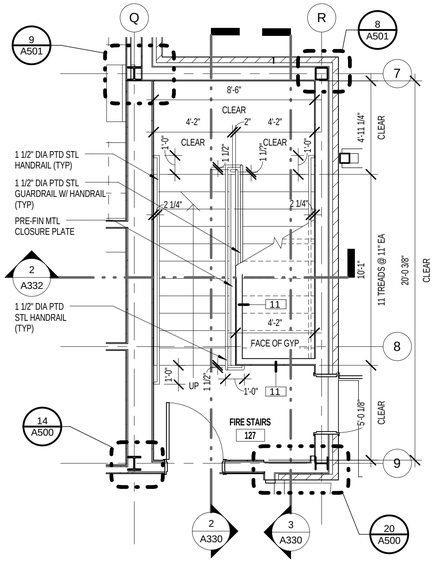

1 A100/A401 1ST FLR- ENLARGED PLAN- FIRE STAIRS 127
1/4" = 1'-0"

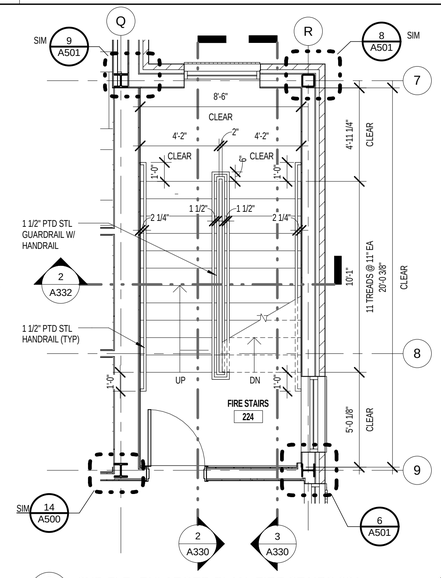

2 A101/A401 2ND FLR- ENLARGED PLAN- FIRE STAIRS 224
1/4" = 1'-0"

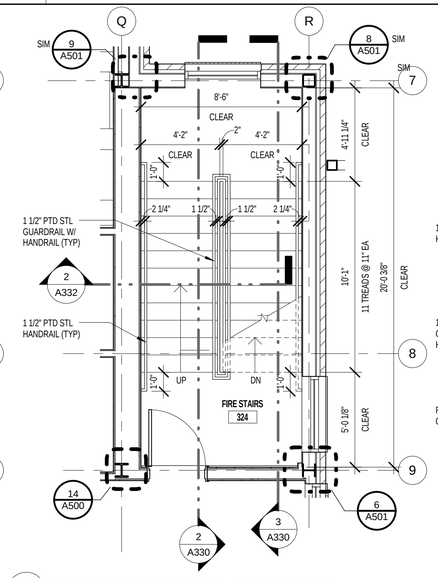

3 A102/A401 3RD FLR- ENLARGED PLAN- FIRE STAIRS 324
1/4" = 1'-0"

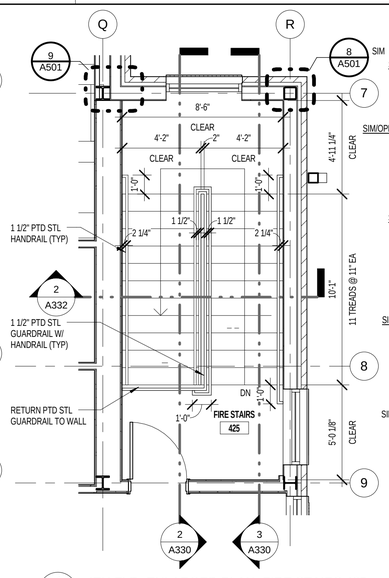

4 A103/A401 4TH FLR- ENLARGED PLAN- FIRE STAIRS 425
1/4" = 1'-0"

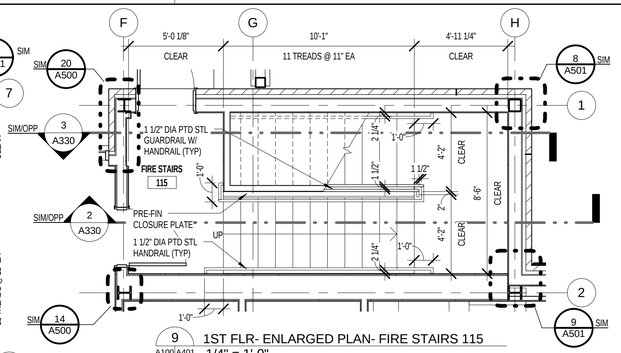

9 A100/A401 1ST FLR- ENLARGED PLAN- FIRE STAIRS 115
1/4" = 1'-0"

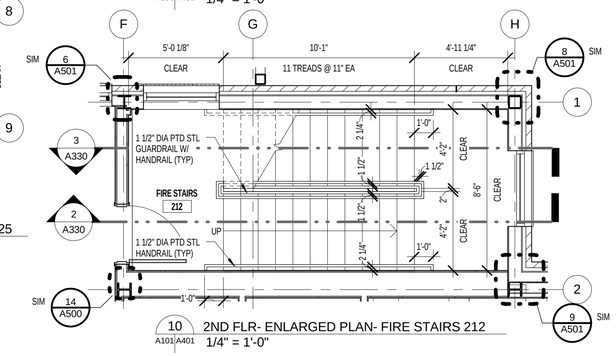

10 A101/A401 2ND FLR- ENLARGED PLAN- FIRE STAIRS 212
1/4" = 1'-0"

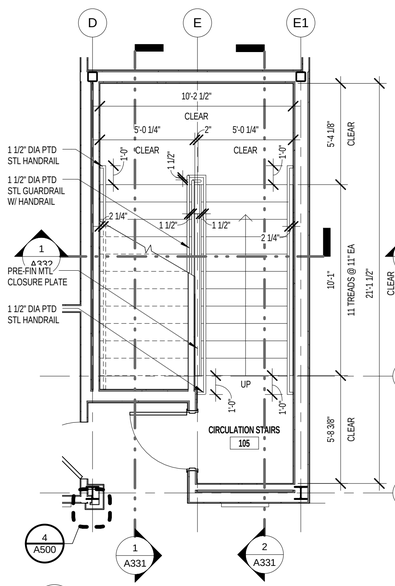

5 A100/A401 1ST FLR- ENLARGED PLAN- CIRC STAIRS 105
1/4" = 1'-0"

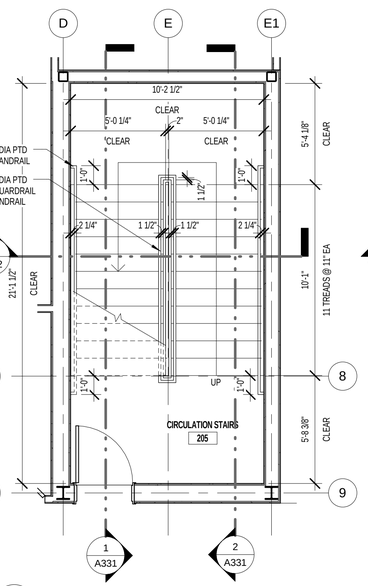

6 A101/A401 2ND FLR- ENLARGED PLAN- CIRC. STAIRS 205
1/4" = 1'-0"

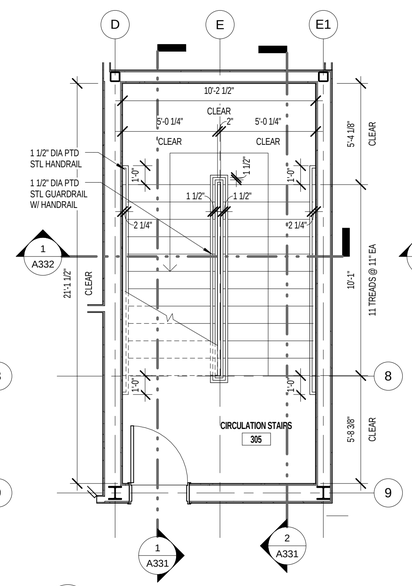

7 A102/A401 3RD FLR- ENLARGED PLAN- CIRC. STAIRS 305
1/4" = 1'-0"

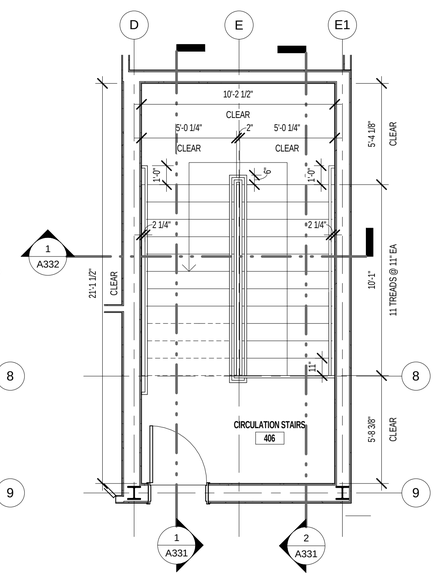

8 A103/A401 4TH FLR- ENLARGED PLAN- CIRC. STAIRS 406
1/4" = 1'-0"

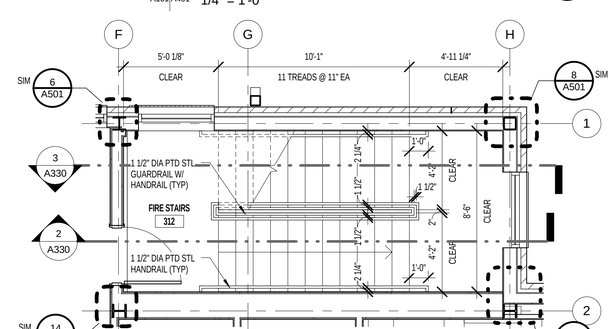

11 A102/A401 3RD FLR- ENLARGED PLAN- FIRE STAIRS 312
1/4" = 1'-0"

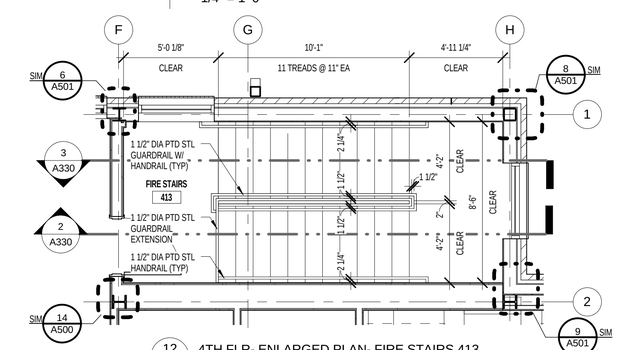

12 A103/A401 4TH FLR- ENLARGED PLAN- FIRE STAIRS 413
1/4" = 1'-0"

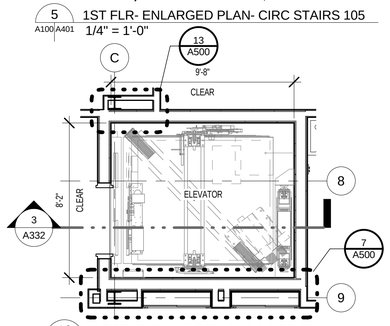

13 A104/A401 1ST FLR- ENLARGED ELEVATOR PLAN
1/4" = 1'-0"

0' 2' 4' 8' 16'
SCALE: 1/4" = 1'- 0"

SYM	DESCRIPTION	DATE	APPR

NAVFAC

ANDERSON DRACE JOINT VENTURE

REGISTERED ARCHITECT Mark E. Lisher 2769 Biloxi, MS STATE OF MISSISSIPPI 1-17-12 SEAL

EGH ARCHITECTS
eleyguildhardy.com
A/E INFO

APPROVED
FOR COMMANDER NAVFAC
ACTIVITY
SATISFACTORY TO DATE JAN 19, 2012

DES	DRW	CHK
PCW	PCW	KLK

NAVAL FACILITIES ENGINEERING COMMAND
NAVAL AIR STATION, JACKSONVILLE, FL

DEPARTMENT OF THE NAVY
NAVAL FACILITIES ENGINEERING COMMAND SOUTHEAST
IPT GULF/COAST
CORRY STATION
PENSACOLA, FLORIDA

BUILDING P-724 Corry "A" School BEQ
REVISED [2+0] MODULE DESIGN

ENLARGED ELEVATOR/ STAIR PLANS

SCALE: AS INDICATED
EPROJECT NO.: 10-045
CONSTR. CONTR. NO.
N69450-10-C-0755
NAVFAC DRAWING NO.
15050429
SHEET 84 OF 204

A401

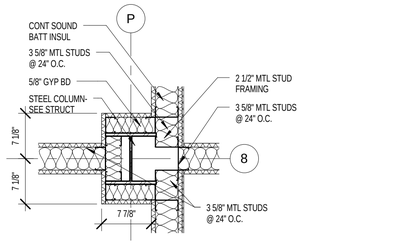

1 A400/A500 1ST FLR- PLAN DETAIL- TYPE C MODULE 1" = 1'-0"

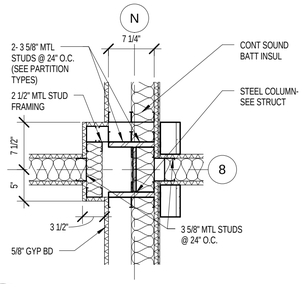

2 A400/A500 1ST FLR- PLAN DETAIL 2- TYPE C MODULE 1" = 1'-0"

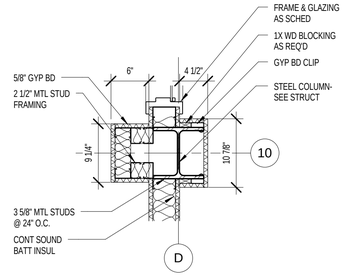

3 A105/A500 1ST FLR- PLAN DETAIL- NW OFFICE 102 1" = 1'-0"

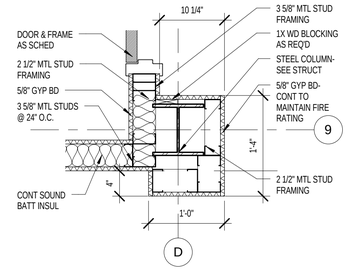

4 A105/A500 1ST FLR- PLAN DETAIL- JAN 104 1" = 1'-0"

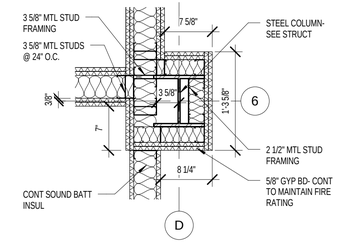

5 A104/A500 2ND FLR- PLAN DETAIL- COMM 206/SHAFT (2-HR) 1" = 1'-0"

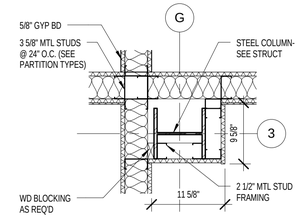

6 A400/A500 1ST FLR- PLAN DETAIL- TYPE D MODULE 1" = 1'-0"

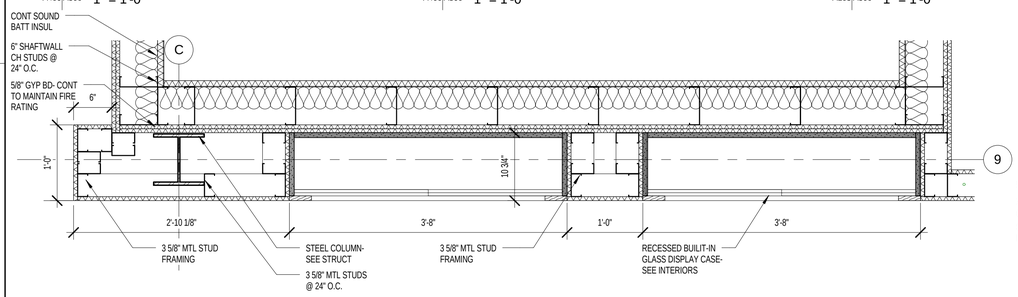

7 A105/A500 1ST FLR- PLAN DETAIL- DISPLAY CASES 1" = 1'-0"

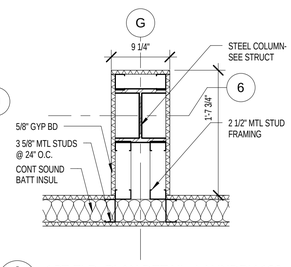

8 A104/A500 1ST FLR- PLAN DETAIL- LAUNDRY 120 1" = 1'-0"

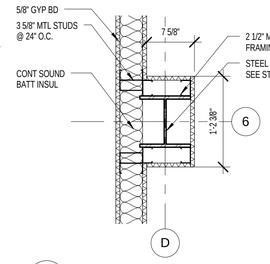

9 A104/A500 1ST FLR- PLAN DETAIL- COMM 108 1" = 1'-0"

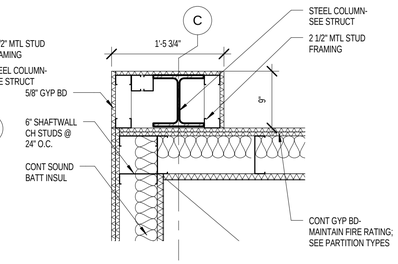

10 A104/A500 2ND FLR- PLAN DETAIL- ELEV CORNER 1" = 1'-0"

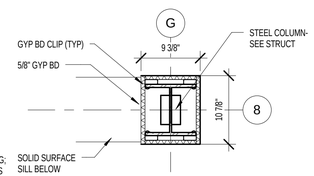

11 A104/A500 1ST FLR- PLAN DETAIL 2- LAUNDRY 120 1" = 1'-0"

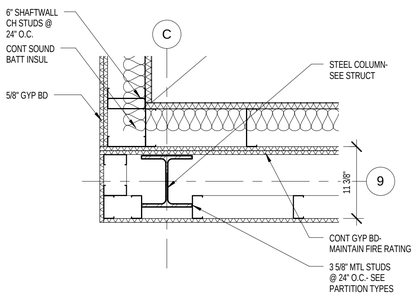

12 A104/A500 2ND FLR- PLAN DETAIL- ELEV CORNER @ LOBBY 236 1" = 1'-0"

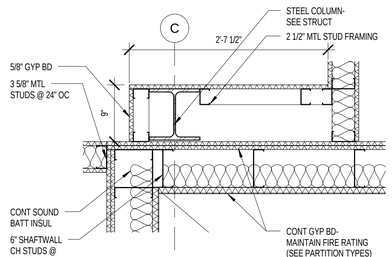

13 A401/A500 1ST FLR- PLAN DETAIL- ELEVATOR SHAFT 1" = 1'-0"

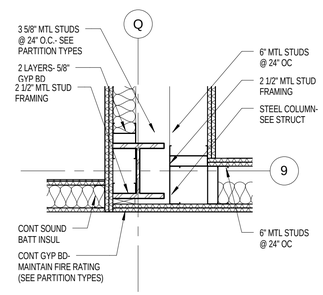

14 A401/A500 1ST FLR- PLAN DETAIL- F. S. 127 SW CORNER 1" = 1'-0"

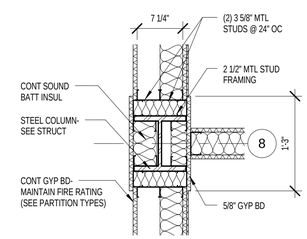

15 A104/A500 1ST FLR- PLAN DETAIL- LAUNDRY ACCESS 1" = 1'-0"

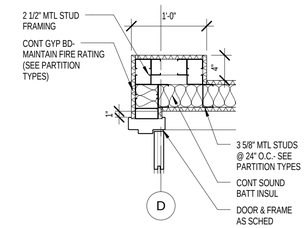

16 A105/A500 1ST FLR- PLAN DETAIL- NW OFFICE 2 1" = 1'-0"

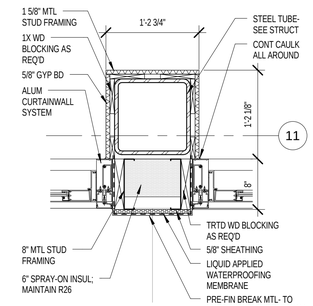

17 A104/A500 1ST FLR- PLAN DETAIL- LOBBY CURTAINWALL 1" = 1'-0"

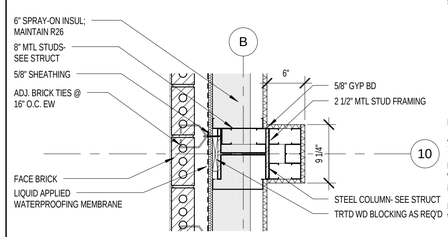

18 A105/A500 1ST FLR- PLAN DETAIL- LOBBY PILASTER 1" = 1'-0"

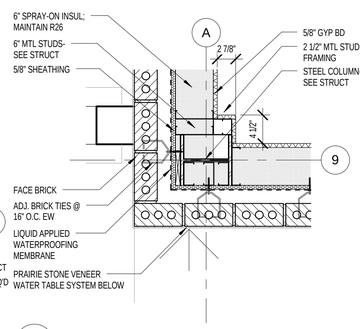

19 A104/A500 1ST FLR- PLAN DETAIL- VENDING CORNER 1" = 1'-0"

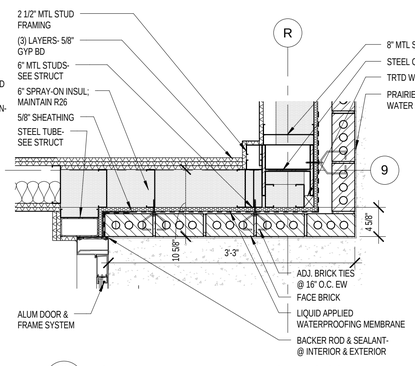

20 A401/A500 1ST FLR- PLAN DETAIL- FIRE STAIRS CORNER 1" = 1'-0"

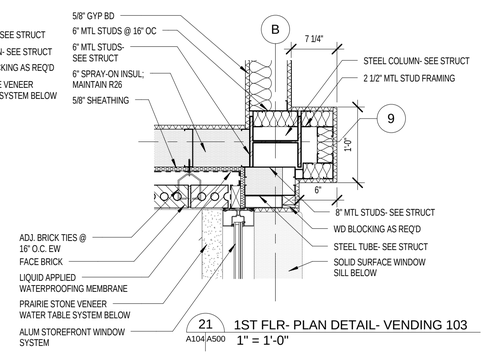

21 A104/A500 1ST FLR- PLAN DETAIL- VENDING 103 1" = 1'-0"

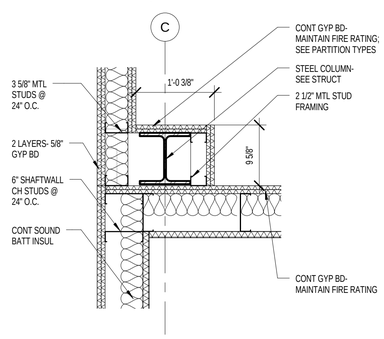

22 A105/A500 4TH FLR- PLAN DETAIL- ELEV CORNER 1" = 1'-0"

0' 1' 2' 3'
SCALE: 1" = 1'-0"

			APPR
			DATE
			DESCRIPTION
			SYM

NAVFAC

ANDERSON DRACE JOINT VENTURE

REGISTERED ARCHITECT Mark E. Lisher 2769 Biloxi, MS STATE OF MISSISSIPPI 1-17-12 SEAL

EGH ARCHITECTS eleyguildhardy.com A/E INFO

APPROVED

FOR COMMANDER NAVFAC

ACTIVITY

SATISFACTORY TO DATE JAN 19, 2012

DES FCW DRW FCW CHK KLK

DEPARTMENT OF THE NAVY
NAVAL FACILITIES ENGINEERING COMMAND SOUTHEAST
(PT GULF/COAST)
CORRY STATION

NAVAL FACILITIES ENGINEERING COMMAND
NAVAL AIR STATION JACKSONVILLE, FL
PENSACOLA, FLORIDA

BUILDING P-724 Corry "A" School BEQ
REVISED [2+0] MODULE DESIGN

PLAN DETAILS

SCALE: AS INDICATED
EPROJECT NO.: 10-045
CONSTR. CONTR. NO. N69450-10-C-0755
NAVFAC DRAWING NO. 15050430
SHEET 85 OF 204

A500

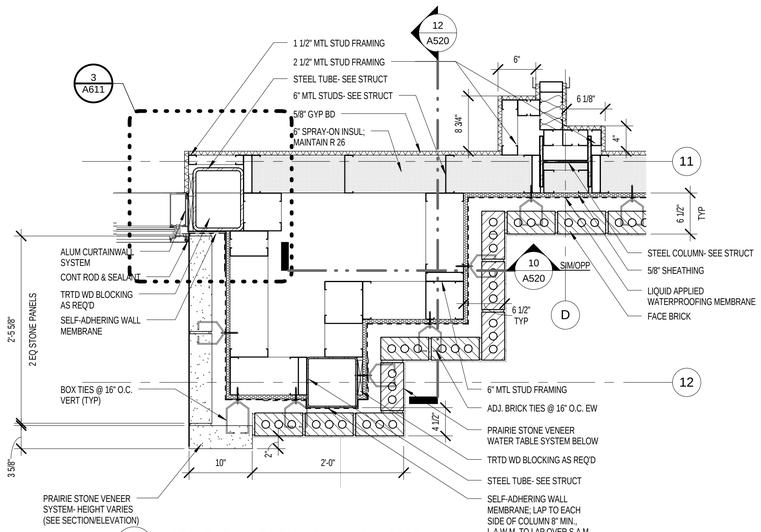

1 A105|A501 1ST FLR- PLAN DETAIL- ENTRY PILASTER 1" = 1'-0"

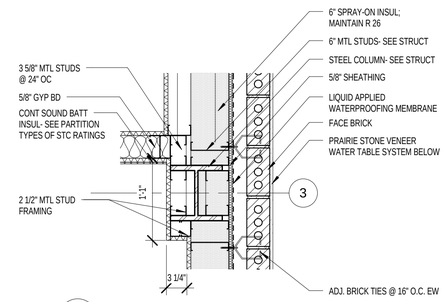

2 A400|A501 1ST FLR- PLAN DETAIL 2- TYPE D MODULE 1" = 1'-0"

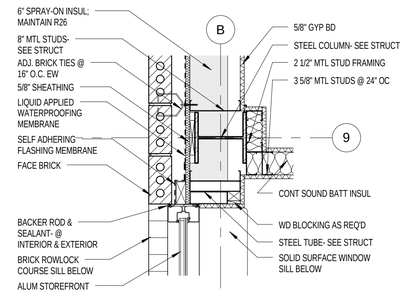

3 A104|A501 2ND FLR- PLAN DETAIL- VENDING 200 CORNER 1" = 1'-0"

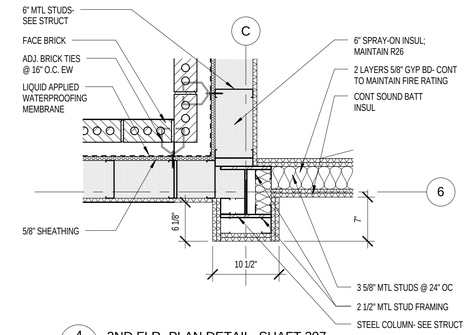

4 A104|A501 2ND FLR- PLAN DETAIL- SHAFT 207 1" = 1'-0"

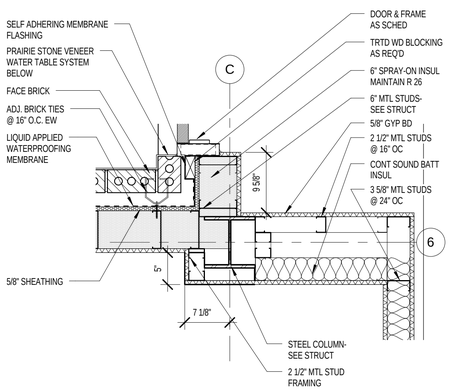

5 A104|A501 1ST FLR- PLAN DETAIL- FIRE PUMP ROOM 106 1" = 1'-0"

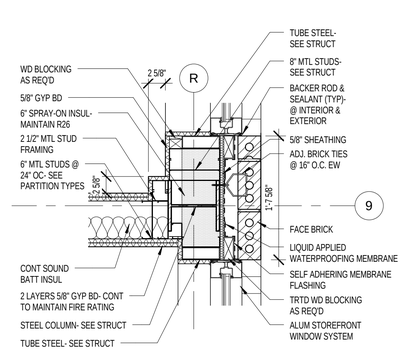

6 A401|A501 2ND FLR- PLAN DETAIL- F. S. 224 SE CORNER 1" = 1'-0"

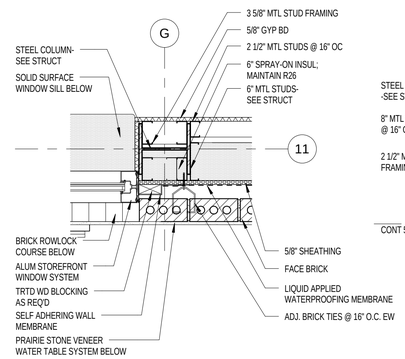

7 A400|A501 1ST FLR- PLAN DETAIL- BREAKROOM 137 FURR OUT 1" = 1'-0"

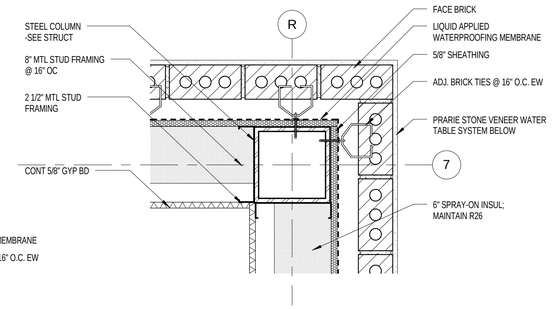

8 A401|A501 1ST FLR- PLAN DETAIL- F. S. 127 NE CORNER 1 1/2" = 1'-0"

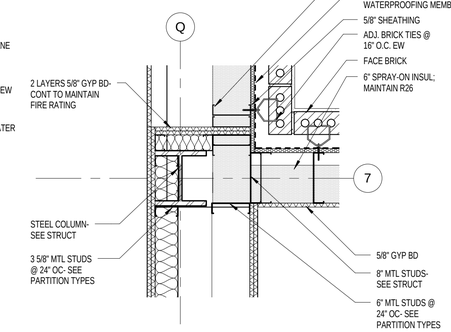

9 A401|A501 1ST FLR- PLAN DETAIL- F. S. 127 NW CORNER 1" = 1'-0"

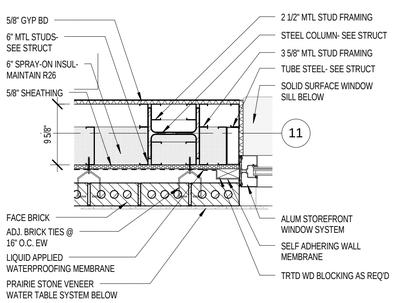

10 A400|A501 1ST FLR- PLAN DETAIL - MODULE 134 1" = 1'-0"

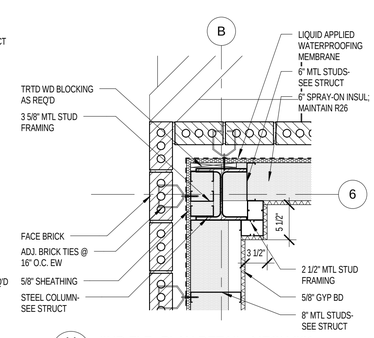

11 A104|A501 2ND FLR- PLAN DETAIL- MECH 201 1" = 1'-0"

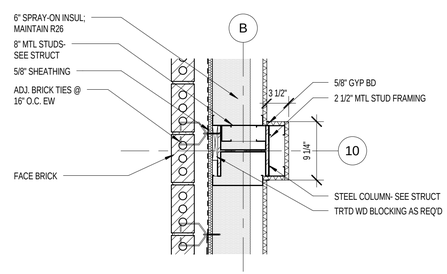

12 A400|A501 2ND FLR- PLAN DETAIL- OFFICE 235 1" = 1'-0"

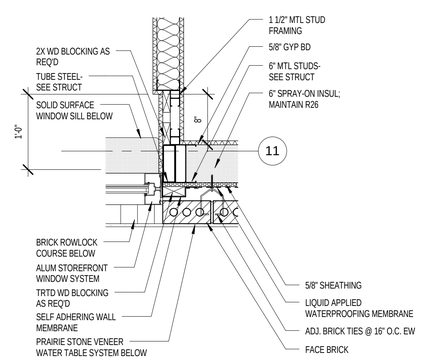

13 A400|A501 1ST FLR- PLAN DETAIL- OFFICE 101 1" = 1'-0"

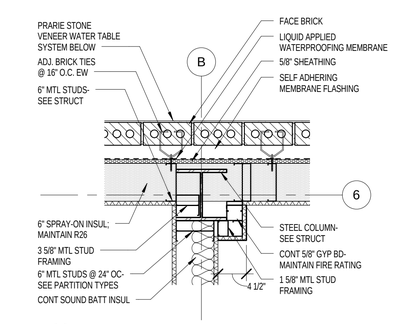

14 A104|A501 1ST FLR- PLAN DETAIL- FIRE PUMP ROOM 1" = 1'-0"

SCALE: 1" = 1'-0"

SCALE: 1 1/2" = 1'-0"

SYM	DESCRIPTION	DATE	APPR

NAVFAC

ANDERSON DRACE JOINT VENTURE

REGISTERED ARCHITECT Mark E. Lisher 2769 Biloxi, MS STATE OF MISSISSIPPI 1-17-12 SEAL

EGH ARCHITECTS eleyguildhardy.com A/E INFO

APPROVED

FOR COMMANDER NAVFAC

ACTIVITY

SATISFACTORY TO DATE JAN 19, 2012

DES	PCW	DRW	PCW	CHK	KLK

DEPARTMENT OF THE NAVY
NAVAL FACILITIES ENGINEERING COMMAND SOUTHEAST
P.O. BOX 190010 NAVAL AIR STATION JACKSONVILLE, FL
CORRY STATION PENSACOLA, FLORIDA

BUILDING P-724 Corry "A" School BEQ
REVISED [2+0] MODULE DESIGN

PLAN DETAILS

SCALE: AS INDICATED

EPROJECT NO.: 10-045

CONSTR. CONTR. NO. N69450-10-C-0755

NAVFAC DRAWING NO. 15050431

SHEET 86 OF 204

A501

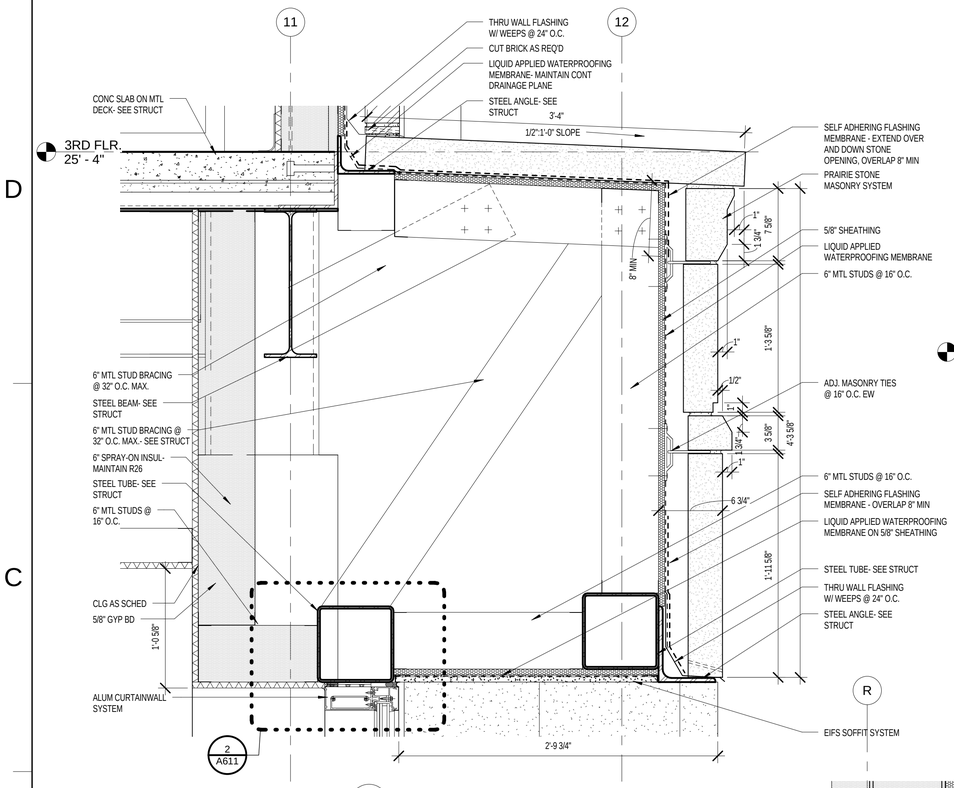

1 A310/A510 SECTION DETAIL- STONE OPENING
1 1/2" = 1'-0"

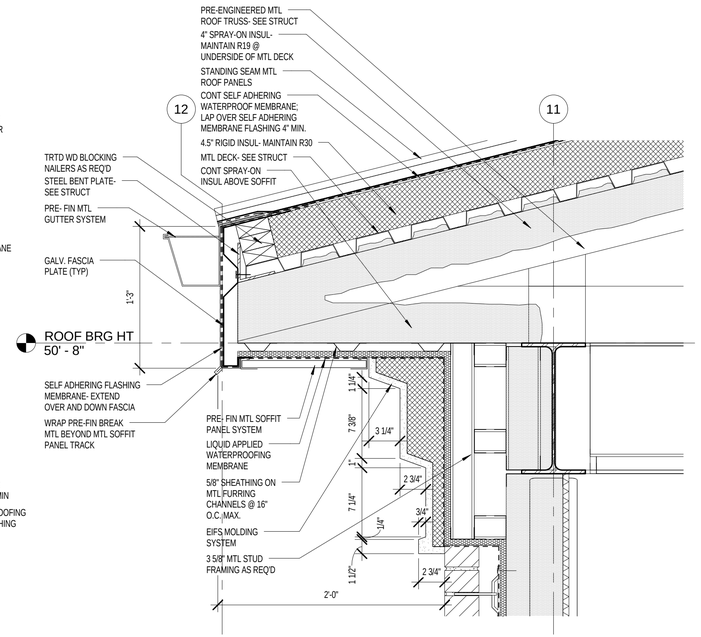

2 A110/A510 SECTION DETAIL- ROOF (TYPICAL)
1 1/2" = 1'-0"

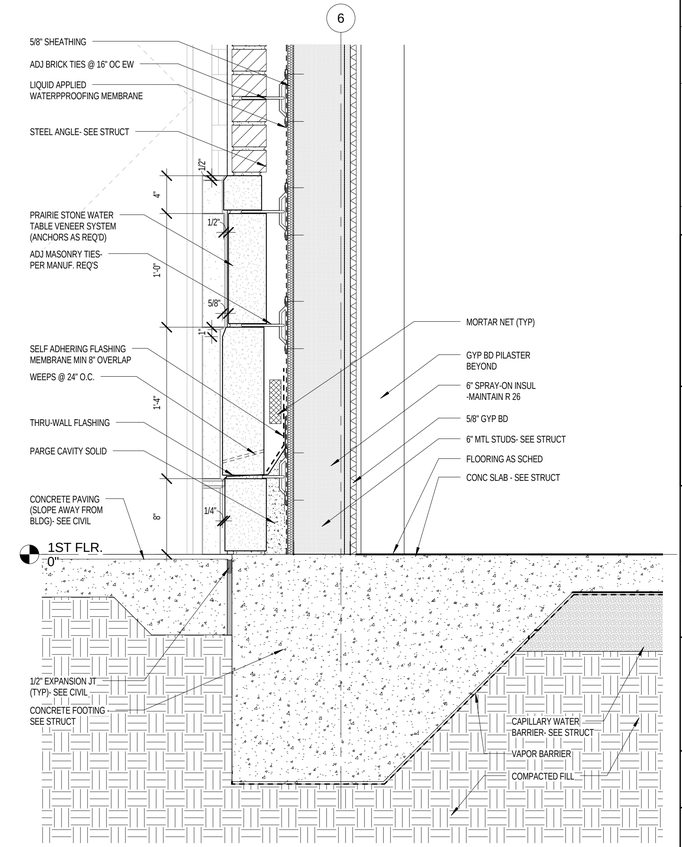

3 A311/A510 SECTION DETAIL- BASE (TYP)
1 1/2" = 1'-0"

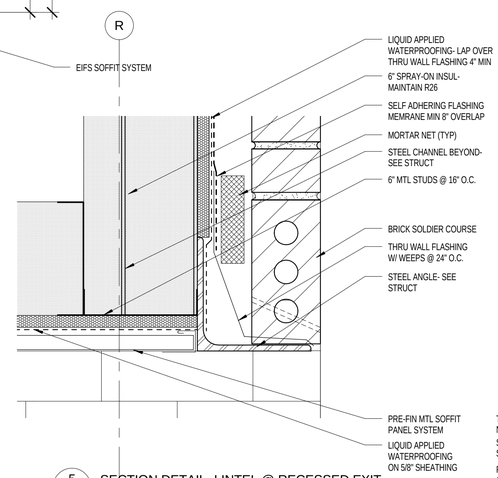

5 A311/A510 SECTION DETAIL- LINTEL @ RECESSED EXIT
3" = 1'-0"

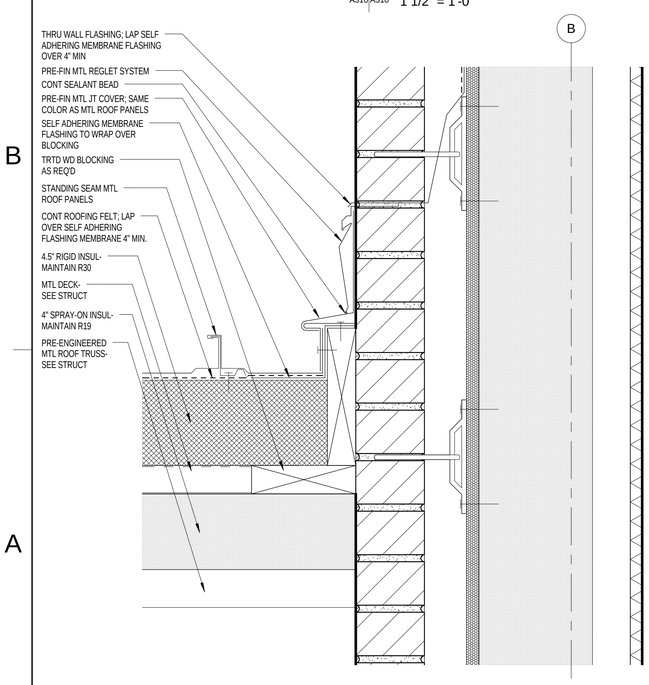

4 A300/A510 SECTION DETAIL- RAKE @ METAL ROOF/BRICK
3" = 1'-0"

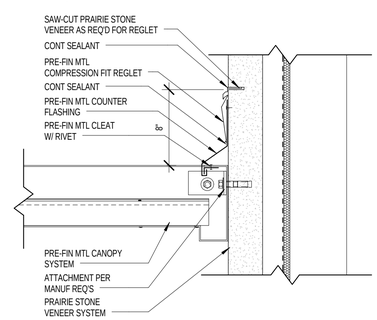

6 A520/A510 SECTION DETAIL- FLASHING @ CANOPY (STONE)
1 1/2" = 1'-0"

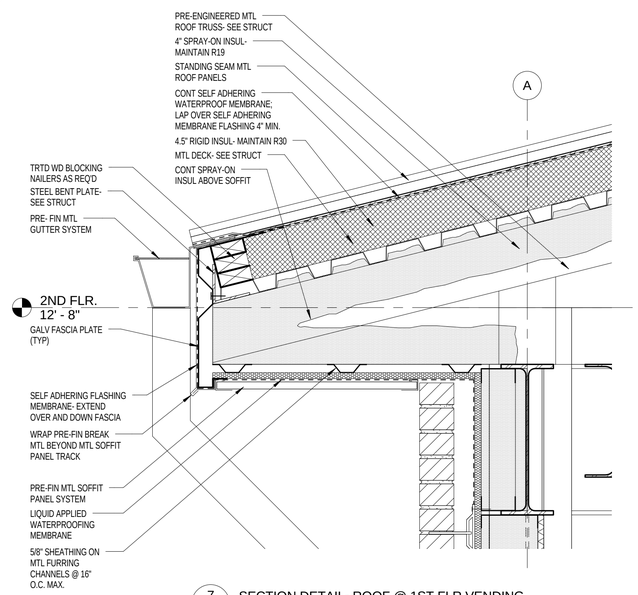

7 A110/A510 SECTION DETAIL- ROOF @ 1ST FLR VENDING
1 1/2" = 1'-0"

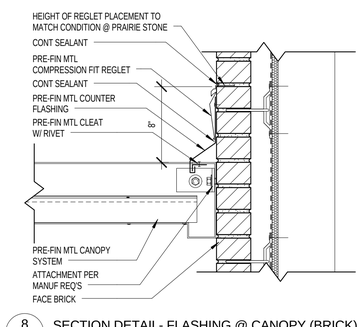

8 A520/A510 SECTION DETAIL- FLASHING @ CANOPY (BRICK)
1 1/2" = 1'-0"

0' 1' 2'
SCALE: 1 1/2" = 1'-0"

0' 6" 1'
SCALE: 3" = 1'-0"

SYM	DESCRIPTION	DATE	APPR

NAVFAC

ANDERSON DRACE JOINT VENTURE

REGISTERED ARCHITECT Mark E. Lisher 2769 Biloxi, MS STATE OF MISSISSIPPI 1-17-12 SEAL

EGH ARCHITECTS eleyguildhardy.com A/E INFO

APPROVED

FOR COMMANDER NAVFAC

ACTIVITY

SATISFACTORY TO DATE JAN 19, 2012

DES PCW | DRW PCW | CHK KLK

DEPARTMENT OF THE NAVY
NAVAL FACILITIES ENGINEERING COMMAND SOUTHEAST
1P7 GULF-COAST
CORRY STATION

NAVAL FACILITIES ENGINEERING COMMAND
NAVAL AIR STATION JACKSONVILLE, FL
PENSACOLA, FLORIDA

BUILDING P-724 Corry "A" School BEQ
REVISED [2+0] MODULE DESIGN

SECTION DETAILS

SCALE: AS INDICATED
EPROJECT NO.: 10-045
CONSTR. CONTR. NO. N69450-10-C-0755
NAVFAC DRAWING NO. 15050432
SHEET 87 OF 204

A510

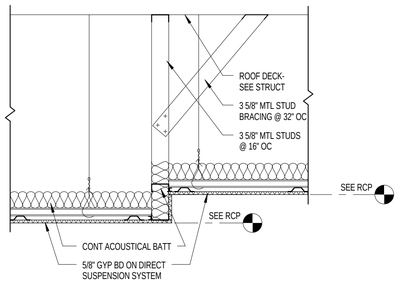

1 A124|A520 FURR DOWN - MODULE (TYP)
3/4" = 1'-0"

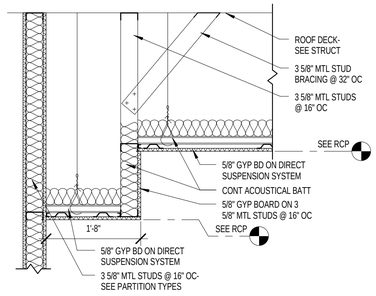

2 A124|A520 FURR DOWN - LOBBY (TYP)
3/4" = 1'-0"

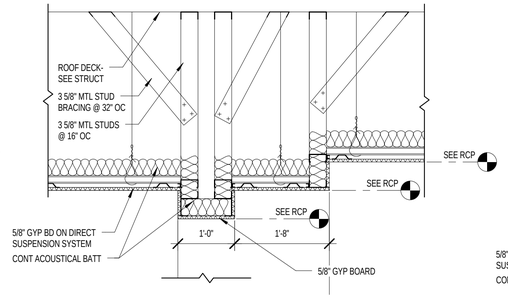

3 A124|A520 FURR DOWN - LOBBY TRANSITION
3/4" = 1'-0"

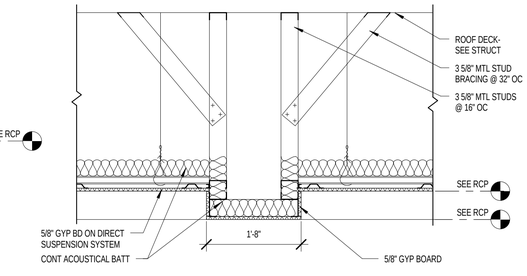

4 A124|A520 FURR DOWN - LOBBY CEILING
3/4" = 1'-0"

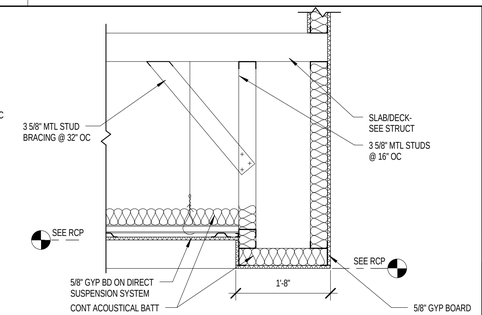

5 A124|A520 FURR DOWN - LOBBY CEILING END
3/4" = 1'-0"

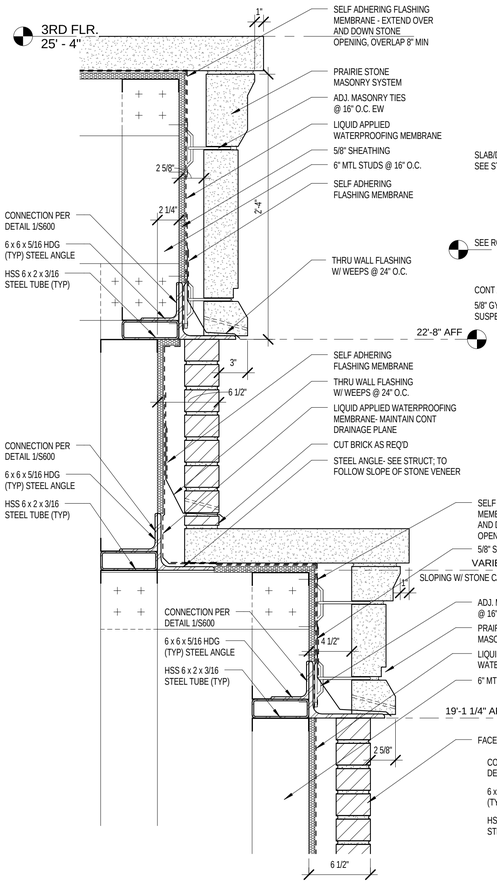

10 A104|A520 SECTION DETAIL- ENTRY PILASTER CAP TRANSITION
1 1/2" = 1'-0"

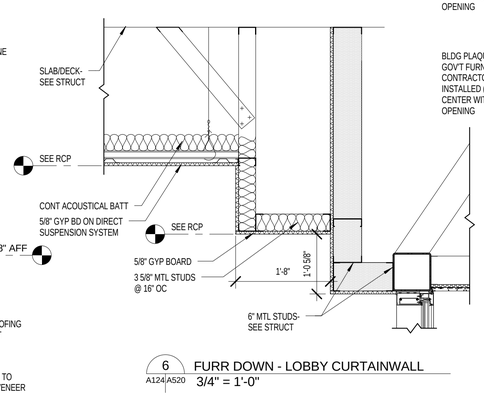

6 A124|A520 FURR DOWN - LOBBY CURTAINWALL
3/4" = 1'-0"

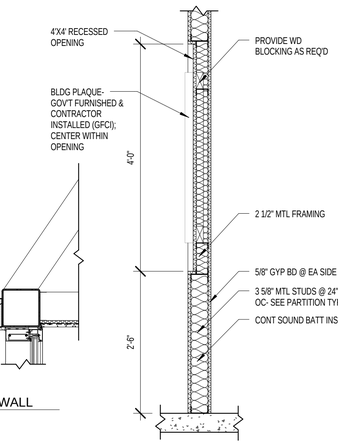

7 A520 PLAQUE RECESS @ LOBBY
3/4" = 1'-0"

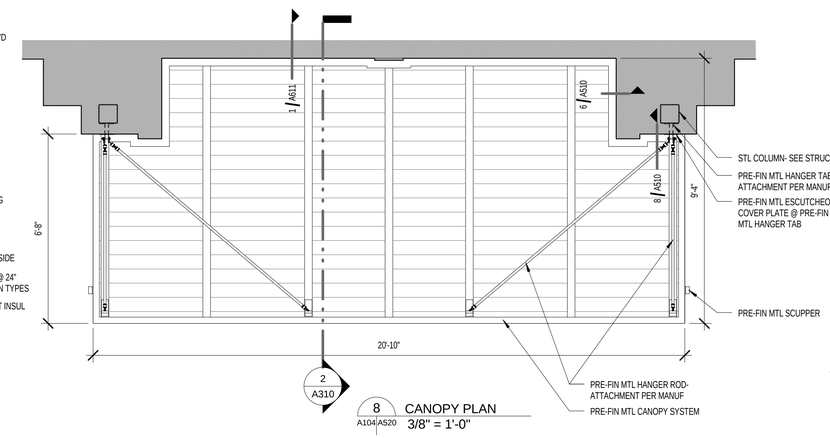

8 A104|A520 CANOPY PLAN
3/8" = 1'-0"

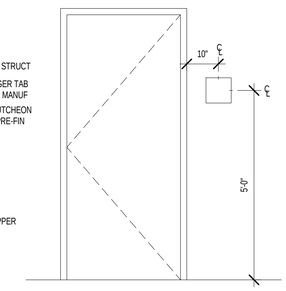

9 A520 SIGNAGE LOCATION
1/2" = 1'-0"

BRICK EXPANSION JOINT LOCATION NOTES:

BRICK EXPANSION JOINT DEFINITION (EJ): AN EXPANSION JOINT MAY BE HORIZONTAL OR VERTICAL. EXPANSION JOINTS ARE FORMED OF HIGHLY ELASTIC MATERIALS IN A CONTINUOUS, UNOBSTRUCTED OPENING THRU THE BRICK WYTHE.

CONTROL JOINT DEFINITION: A CONTROL JOINT IS USED IN CONCRETE OR CONCRETE MASONRY CONSTRUCTION TO CREATE A PLANE OF WEAKNESS WHICH, USED IN CONJUNCTION WITH REINFORCEMENT OR JOINT REINFORCEMENT, CONTROLS THE LOCATION OF CRACKS DUE TO VOLUME CHANGES RESULTING IN SHRINKAGE AND CREEP.

FOR FURTHER INFORMATION, *CONSULT THE TECHNICAL NOTES OF BRICK CONSTRUCTION AND THE GYPSUM CONSTRUCTION HANDBOOK.*

1. SEE PLANS AND ELEVATIONS FOR LOCATION OF BRICK EXPANSION JOINTS.

2. THE MAX. DISTANCE OF A JOINT FROM A CORNER IS 25 FT. AVOID PLACING EXPANSION JOINTS BETWEEN TWO ADJACENT WINDOWS.

3. EXPANSION JOINTS ARE TO OCCUR AT ALL ABRUPT CHANGES IN WALL HEIGHT.

4. PROVIDE EXPANSION JOINTS AT ALL CHANGES IN WALL THICKNESS, SUCH AS THOSE AT PIPE OR DUCT CHASES AND THOSE ADJACENT TO COLUMNS OR PILASTERS (SEE DIAGRAM 2).

5. PROVIDE EXPANSION JOINTS AT ALL LARGE OPENINGS IN WALLS. OPENINGS LARGER THAN 6 FT MUST HAVE JOINTS AT BOTH SIDES. OFFSET THE EXP JOINT (MIN. 8") AS REQ'D TO ALLOW LINTEL ADEQUATE BEARING AREA (SEE DIAGRAM 3) TO PERMIT MOVEMENT. THE BEARING OF AT LEAST ONE END OF THE LINTEL SHOULD BE BUILT TO SLIDE. PLASTIC OR BITUMINOUS SHEET SHOULD BE USED FOR A SLIP PLATE.

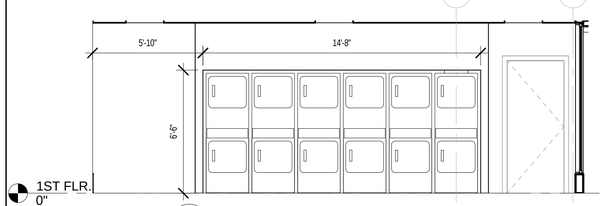

11 A104|A520 INTERIOR ELEVATION- LAUNDRY (TYP)
1/4" = 1'-0"

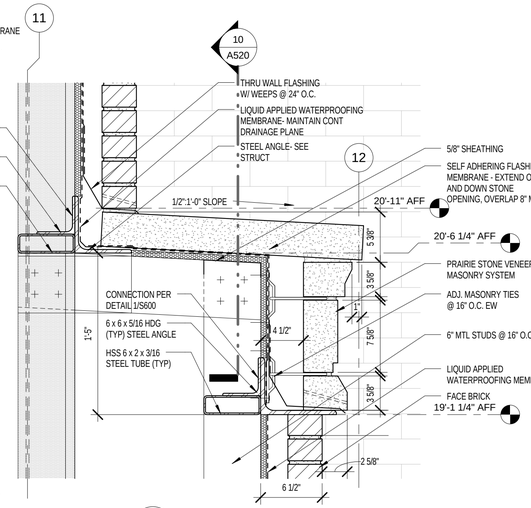

12 A501|A520 SECTION DETAIL- CAP TRANSITION 2
1 1/2" = 1'-0"

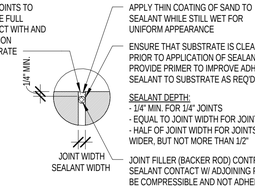

13 A520 VERT BRICK EXP JT
3" = 1'-0"

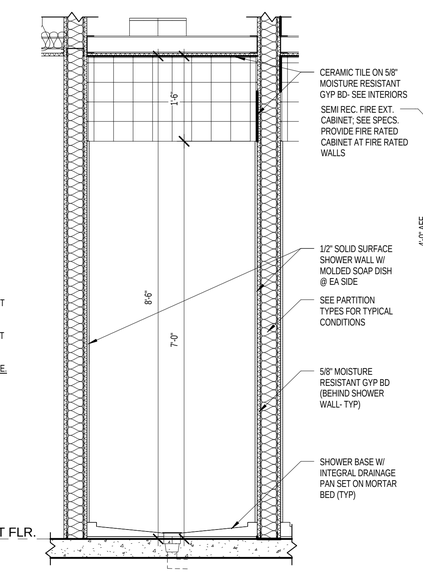

14 A125|A520 WALL SECTION- SHOWER (TYP)
3/4" = 1'-0"

NOTE:
STC/ FIRE RATINGS TO REMAIN @
EXTINGUISHER CABINET LOCATIONS

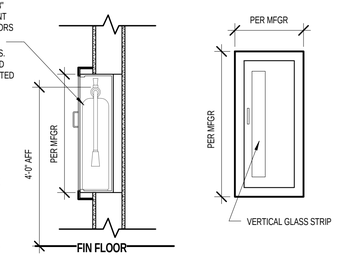

METAL STUD WALL CONDITION
F.E.C. STANDARD CABINET

15 A520 FIRE EXTINGUISHER CAB DETAILS
3/4" = 1'-0"

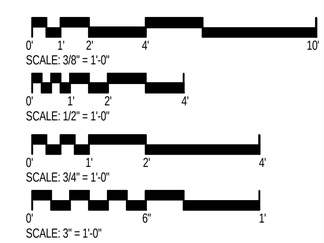

SYM	DESCRIPTION	DATE	APPR

NAVFAC

ANDERSON DRACE
JOINT VENTURE

REGISTERED ARCHITECT
Mark E. Lisher
2769
Biloxi, MS
STATE OF MISSISSIPPI
1-19-12
SEAL

EGH ARCHITECTS
eleyguildhardy.com
A/E INFO

APPROVED

FOR COMMANDER NAVFAC

ACTIVITY

SATISFACTORY TO DATE JAN 19, 2012

DES POW DRW POW CHK KLK

NAVAL FACILITIES ENGINEERING COMMAND
NAVAL AIR STATION JACKSONVILLE, FL
PENSACOLA, FLORIDA

DEPARTMENT OF THE NAVY
NAVAL FACILITIES ENGINEERING COMMAND SOUTHEAST
IPT GULFCOAST
CORRY STATION

BUILDING P-724 Corry "A" School BEQ
REVISED [2+0] MODULE DESIGN

DETAILS

SCALE: AS INDICATED
EPROJECT NO.: 10-045
CONSTR. CONTR. NO. N69450-10-C-0755
NAVFAC DRAWING NO. 15050433
SHEET 88 OF 204

A520

OPENING SCHEDULE- MODULE (TYPE A)

MODULE #	DOOR NO.	SINGLE/PAIR	DIMENSIONS Width	DIMENSIONS Height	DIMENSIONS Thickness	DOOR MATERIAL	DOOR TYPE	DOOR GLAZING	FRAME MATERIAL	FRAME TYPE	DETAILS HEAD	DETAILS JAMB	DETAILS SILL	FIRE RATING	STC RATING	HDWE SET NO.	COMMENTS
1 20 39 58 77 2 21 40 59 78 12 22 41 60 79 13 32 42 61 80 14 33 43 62 81 15 34 53 63 82 16 35 54 64 83 17 36 55 65 18 37 56 75 19 38 57 76	129A	S	3' - 0"	7' - 0"	1 3/4"	WD	1	---	HM	1	12/A610	12/A610	---	20 MIN	39		3
	129B	S	3' - 0"	7' - 0"	1 3/4"	WD	1	---	HM	1	12/A610	12/A610	---	20 MIN	39		3
	129C	S	2' - 6"	7' - 0"	1 3/4"	WD	1	---	HM	1	12/A610	12/A610	---	---	---		3
	129D	S	2' - 6"	7' - 0"	1 3/4"	WD	1	---	HM	1	12/A610	12/A610	---	---	---		3
	129E	S	2' - 6"	7' - 0"	1 3/4"	WD	1	---	HM	1	12/A610	12/A610	---	---	---		---
	129F	S	2' - 6"	7' - 0"	1 3/4"	WD	1	---	HM	1	12/A610	12/A610	---	---	---		---
	129G	S	2' - 6"	7' - 0"	1 3/4"	WD	1	---	HM	1	12/A610	12/A610	---	---	---		---
	129H	S	2' - 6"	7' - 0"	1 3/4"	WD	1	---	HM	1	12/A610	12/A610	---	---	---		---
	129I	S	2' - 6"	7' - 0"	1 3/4"	WD	1	---	HM	1	12/A610	12/A610	---	---	---		3
	129J	S	2' - 6"	7' - 0"	1 3/4"	WD	1	---	HM	1	12/A610	12/A610	---	---	---		3

OPENING SCHEDULE- MODULE (TYPE B)

MODULE #	DOOR NO.	SINGLE/PAIR	DIMENSIONS Width	DIMENSIONS Height	DIMENSIONS Thickness	DOOR MATERIAL	DOOR TYPE	DOOR GLAZING	FRAME MATERIAL	FRAME TYPE	DETAILS HEAD	DETAILS JAMB	DETAILS SILL	FIRE RATING	STC RATING	HDWE SET NO.	COMMENTS
3 8 10 23 28 30 44 49 51 66 71 73	125A	S	3' - 0"	7' - 0"	1 3/4"	WD	1	---	HM	1	12/A610	12/A610	---	20 MIN	39		3
	125B	S	3' - 0"	7' - 0"	1 3/4"	WD	1	---	HM	1	12/A610	12/A610	---	20 MIN	39		3
	125C	S	2' - 6"	7' - 0"	1 3/4"	WD	1	---	HM	1	12/A610	12/A610	---	---	---		3
	125D	S	2' - 6"	7' - 0"	1 3/4"	WD	1	---	HM	1	12/A610	12/A610	---	---	---		3
	125E	S	2' - 6"	7' - 0"	1 3/4"	WD	1	---	HM	1	12/A610	12/A610	---	---	---		---
	125F	S	2' - 6"	7' - 0"	1 3/4"	WD	1	---	HM	1	12/A610	12/A610	---	---	---		---
	125G	S	2' - 6"	7' - 0"	1 3/4"	WD	1	---	HM	1	12/A610	12/A610	---	---	---		---
	125H	S	2' - 6"	7' - 0"	1 3/4"	WD	1	---	HM	1	12/A610	12/A610	---	---	---		---
	125I	S	2' - 6"	7' - 0"	1 3/4"	WD	1	---	HM	1	12/A610	12/A610	---	---	---		3
	125J	S	2' - 6"	7' - 0"	1 3/4"	WD	1	---	HM	1	12/A610	12/A610	---	---	---		3

OPENING SCHEDULE- MODULE (TYPE C)

MODULE #	DOOR NO.	SINGLE/PAIR	DIMENSIONS Width	DIMENSIONS Height	DIMENSIONS Thickness	DOOR MATERIAL	DOOR TYPE	DOOR GLAZING	FRAME MATERIAL	FRAME TYPE	DETAILS HEAD	DETAILS JAMB	DETAILS SILL	FIRE RATING	STC RATING	HDWE SET NO.	COMMENTS
4 27 67 5 29 68 6 31 69 7 45 70 9 46 72 11 47 74 24 48 25 50 26 52	117A	S	3' - 0"	7' - 0"	1 3/4"	WD	1	---	HM	1	12/A610	12/A610	---	20 MIN	39		3
	117B	S	3' - 0"	7' - 0"	1 3/4"	WD	1	---	HM	1	12/A610	12/A610	---	20 MIN	39		3
	117C	S	2' - 6"	7' - 0"	1 3/4"	WD	1	---	HM	1	12/A610	12/A610	---	---	---		3
	117D	S	2' - 6"	7' - 0"	1 3/4"	WD	1	---	HM	1	12/A610	12/A610	---	---	---		3
	117E	S	2' - 6"	7' - 0"	1 3/4"	WD	1	---	HM	1	12/A610	12/A610	---	---	---		---
	117F	S	2' - 6"	7' - 0"	1 3/4"	WD	1	---	HM	1	12/A610	12/A610	---	---	---		---
	117G	S	2' - 6"	7' - 0"	1 3/4"	WD	1	---	HM	1	12/A610	12/A610	---	---	---		---
	117H	S	2' - 6"	7' - 0"	1 3/4"	WD	1	---	HM	1	12/A610	12/A610	---	---	---		---
	117I	S	2' - 6"	7' - 0"	1 3/4"	WD	1	---	HM	1	12/A610	12/A610	---	---	---		3
	117J	S	2' - 6"	7' - 0"	1 3/4"	WD	1	---	HM	1	12/A610	12/A610	---	---	---		3

OPENING SCHEDULE- FIRST THRU FOURTH FLOORS

DOOR NO.	SINGLE/PAIR	DIMENSIONS Width	DIMENSIONS Height	DIMENSIONS Thickness	DOOR MATERIAL	DOOR TYPE	DOOR GLAZING	FRAME MATERIAL	FRAME TYPE	DETAILS HEAD	DETAILS JAMB	DETAILS SILL	FIRE RATING	STC RATING	HDWE SET NO.	COMMENTS
FIRST FLOOR																
100A	P	6' - 0"	7' - 0"	1 1/2"	AL	3	GL2	AL	5	1/A611	18/A500 & 15/A610	10/A610	---	---		2
100B	P	6' - 0"	7' - 0"	1 1/2"	AL	3	GL2	AL	5	1/A611	18/A500 & 15/A610	10/A610	---	---		2
101A	S	3' - 0"	7' - 0"	1 3/4"	WD	2	GL6	HM	4	12/A610	12/A610	---	20 MIN	39		3
102A	S	3' - 0"	7' - 0"	1 3/4"	WD	2	GL6	HM	3	12/A610	12/A610	---	20 MIN	39		3
103A	S	3' - 0"	7' - 0"	1 3/4"	WD	2	GL5	HM	1	12/A610	12/A610	---	---	39		---
104A	S	3' - 0"	7' - 0"	1 3/4"	WD	1	---	HM	1	12/A610	12/A610	---	20 MIN	39		---
105A	S	3' - 0"	7' - 0"	1 3/4"	WD	1	---	HM	1	12/A610	12/A610	---	90 MIN	39		---
106A	P	6' - 0"	7' - 0"	1 3/4"	GHM	1	---	GHM	1	7/A610	8/A610	10/A610	---	---		4, 5
107A	S	4' - 0"	8' - 0"	1 3/4"	GHM	1	---	GHM	1	7/A610	8/A610	10/A610	---	---		4, 5
108A	S	3' - 0"	7' - 0"	1 3/4"	WD	1	---	HM	1	12/A610	12/A610	---	20 MIN	39		---
109A	P	6' - 0"	7' - 0"	1 3/4"	GHM	1	---	GHM	1	7/A610	8/A610	10/A610	---	---		4, 5
110A	S	3' - 6"	7' - 0"	1 3/4"	WD	1	---	HM	1	12/A610	12/A610	---	45 MIN	39		---
110B	S	3' - 6"	7' - 0"	1 3/4"	WD	1	---	HM	1	12/A610	12/A610	---	45 MIN	---		
111A	S	3' - 6"	7' - 0"	1 3/4"	WD	1	---	HM	1	12/A610	12/A610	---	20 MIN	---		
111B	P	6' - 0"	7' - 0"	1 3/4"	GHM	1	---	GHM	1	7/A610	8/A610	10/A610	---	---		2, 4, 5
112A	S	3' - 6"	7' - 0"	1 3/4"	WD	1	---	HM	1	12/A610	12/A610	---	---	39		---
115A	S	3' - 0"	7' - 0"	1 3/4"	WD	1	---	HM	1	12/A610	12/A610	---	90 MIN	39		---
115B	S	3' - 0"	7' - 0"	1 3/4"	GHM	1	---	GHM	1	7/A610	8/A610	10/A610	---	---		1, 2, 4, 5
119A	S	3' - 0"	7' - 0"	1 3/4"	WD	1	---	HM	1	12/A610	12/A610	---	20 MIN	39		3
120A	S	3' - 0"	7' - 0"	1 3/4"	WD	1	---	HM	1	12/A610	12/A610	---	45 MIN	39		3
120B	S	3' - 0"	7' - 0"	1 3/4"	WD	1	---	HM	1	12/A610	12/A610	---	45 MIN	---		---
127A	S	3' - 0"	7' - 0"	1 3/4"	WD	1	---	HM	1	12/A610	12/A610	---	90 MIN	---		---
127B	S	3' - 0"	7' - 0"	1 3/4"	GHM	1	---	GHM	1	7/A610	8/A610	10/A610	---	---		1, 2, 4, 5
135A	S	3' - 0"	7' - 0"	1 3/4"	WD	1	---	HM	1	12/A610	12/A610	---	---	---		---
136A	S	3' - 0"	7' - 0"	1 3/4"	WD	1	---	HM	1	12/A610	12/A610	---	---	---		---
137A	S	3' - 0"	7' - 0"	1 3/4"	WD	2	GL5	HM	1	12/A610	12/A610	---	---	---		3
139A	S	3' - 0"	7' - 0"	1 1/2"	AL	3	GL2	AL	2	6/A610	9/A610	10/A610	---	---		1, 2
140A	S	3' - 0"	7' - 0"	1 1/2"	AL	3	GL2	AL	2	6/A610	9/A610	10/A610	---	---		1, 2
SECOND FLOOR																
201A	S	3' - 0"	7' - 0"	1 3/4"	WD	1	---	HM	1	12/A610	12/A610	---	20 MIN	---		---
202A	S	3' - 0"	7' - 0"	1 3/4"	WD	1	---	HM	1	12/A610	12/A610	---	20 MIN	---		---
203A	S	3' - 6"	7' - 0"	1 3/4"	WD	1	---	HM	1	12/A610	12/A610	---	20 MIN	---		---
204A	S	3' - 0"	7' - 0"	1 3/4"	WD	1	---	HM	1	12/A610	12/A610	---	20 MIN	---		---
205A	S	3' - 0"	7' - 0"	1 3/4"	WD	1	---	HM	1	12/A610	12/A610	---	90 MIN	---		---
206A	S	3' - 0"	7' - 0"	1 3/4"	WD	1	---	HM	1	12/A610	12/A610	---	20 MIN	---		---
212A	S	3' - 0"	7' - 0"	1 3/4"	WD	1	---	HM	1	12/A610	12/A610	---	90 MIN	---		---
216A	S	3' - 0"	7' - 0"	1 3/4"	WD	1	---	HM	1	12/A610	12/A610	---	20 MIN	---		3
217A	S	3' - 0"	7' - 0"	1 3/4"	WD	1	---	HM	1	12/A610	12/A610	---	45 MIN	---		3
217B	S	3' - 0"	7' - 0"	1 3/4"	WD	1	---	HM	1	12/A610	12/A610	---	45 MIN	---		---
224A	S	3' - 0"	7' - 0"	1 3/4"	WD	1	---	HM	1	12/A610	12/A610	---	90 MIN	---		---
233A	S	3' - 0"	7' - 0"	1 3/4"	WD	1	---	HM	1	12/A610	12/A610	---	20 MIN	---		3
234A	S	3' - 0"	7' - 0"	1 3/4"	WD	1	---	HM	1	12/A610	12/A610	---	20 MIN	---		3
235A	S	3' - 0"	7' - 0"	1 3/4"	WD	1	---	HM	1	12/A610	12/A610	---	20 MIN	---		3
THIRD FLOOR																
301A	S	3' - 0"	7' - 0"	1 3/4"	WD	1	---	HM	1	12/A610	12/A610	---	20 MIN	---		---
302A	S	3' - 0"	7' - 0"	1 3/4"	WD	1	---	HM	1	12/A610	12/A610	---	20 MIN	---		---
303A	S	3' - 6"	7' - 0"	1 3/4"	WD	1	---	HM	1	12/A610	12/A610	---	20 MIN	---		---
304A	S	3' - 0"	7' - 0"	1 3/4"	WD	1	---	HM	1	12/A610	12/A610	---	20 MIN	---		---
305A	S	3' - 0"	7' - 0"	1 3/4"	WD	1	---	HM	1	12/A610	12/A610	---	90 MIN	---		---
306A	S	3' - 0"	7' - 0"	1 3/4"	WD	1	---	HM	1	12/A610	12/A610	---	20 MIN	---		---
312A	S	3' - 0"	7' - 0"	1 3/4"	WD	1	---	HM	1	12/A610	12/A610	---	90 MIN	---		---
316A	S	3' - 0"	7' - 0"	1 3/4"	WD	1	---	HM	1	12/A610	12/A610	---	20 MIN	---		3
317A	S	3' - 0"	7' - 0"	1 3/4"	WD	1	---	HM	1	12/A610	12/A610	---	45 MIN	---		3
317B	S	3' - 0"	7' - 0"	1 3/4"	WD	1	---	HM	1	12/A610	12/A610	---	45 MIN	---		---
324A	S	3' - 0"	7' - 0"	1 3/4"	WD	1	---	HM	1	12/A610	12/A610	---	90 MIN	---		---
FOURTH FLOOR																
401A	S	3' - 0"	7' - 0"	1 3/4"	WD	1	---	HM	1	12/A610	12/A610	---	20 MIN	---		---
402A	S	3' - 0"	7' - 0"	1 3/4"	WD	1	---	HM	1	12/A610	12/A610	---	20 MIN	---		---
403A	S	3' - 6"	7' - 0"	1 3/4"	WD	1	---	HM	1	12/A610	12/A610	---	20 MIN	---		
404A	S	3' - 6"	7' - 0"	1 3/4"	WD	1	---	HM	1	12/A610	12/A610	---	90 MIN	---		
405A	S	3' - 0"	7' - 0"	1 3/4"	WD	1	---	HM	1	12/A610	12/A610	---	20 MIN	---		---
406A	S	3' - 0"	7' - 0"	1 3/4"	WD	1	---	HM	1	12/A610	12/A610	---	90 MIN	---		---
407A	S	3' - 0"	7' - 0"	1 3/4"	WD	1	---	HM	1	12/A610	12/A610	---	20 MIN	---		---
413A	S	3' - 0"	7' - 0"	1 3/4"	WD	1	---	HM	1	12/A610	12/A610	---	90 MIN	---		---
417A	S	3' - 0"	7' - 0"	1 3/4"	WD	1	---	HM	1	12/A610	12/A610	---	20 MIN	---		3
418A	S	3' - 0"	7' - 0"	1 3/4"	WD	1	---	HM	1	12/A610	12/A610	---	45 MIN	---		3

GENERAL NOTES:

1. PROVIDE WRAP-AROUND HM FRAMES AT ALL INTERIOR LOCATIONS UNLESS NOTED OTHERWISE. CONTRACTOR SHALL VERIFY THICKNESS OF PARTITIONS AND SIZE DEPTH OF FRAME ACCORDINGLY.

2. SEE MECHANICAL SHEETS FOR GRILLES AND UNDERCUTS REQUIRED FOR AIR CIRCULATION THROUGH INTERIOR DOORS.

3. "SMOKE" DESIGNATION UNDER THE "FIRE RATING" COLUMN OF THE DOOR & FRAME SCHEDULE INDICATES THAT THE OPENING ASSEMBLY IS LOCATED IN A SMOKE PARTITION AND SHALL BE CONSTRUCTED TO PREVENT THE PASSAGE OF SMOKE. PROVIDE SMOKE SEALS AND SWEEPS AS REQUIRED.

4. VERIFY WIDTH OF FRAMES FOR ALL OPENINGS REQUIRING ALUMINUM FRAMES. DOOR SIZES ARE INDICATED AS NORMAL BASED ON ASSUMED FRAME SIZES. CONTRACTOR SHALL VERIFY ALL DIMENSIONS WITH ALUMINUM FRAME MANUF. PRIOR TO FINAL SELECTION OF DOOR & FRAMES.

5. CONTRACTOR TO VERIFY LOCATION OF MORTISE LOCKS, HARDWARE AND VIEW LITES TO AVOID CONFLICTS.

6. ALL INTERIOR MULLION TUBES ON INTERIOR HOLLOW METAL FRAMES TO BE 4 1/2" UNLESS NOTED OTHERWISE.

7. FORCE TO OPEN NEW DOORS WITH PANIC HARDWARE, NOT TO EXCEED 30 LBS.

8. FIELD VERIFY ALL ROUGH OPENING FRAME WIDTHS PRIOR TO FABRICATION.

9. FIELD VERIFY ALL RADIUSES PRIOR TO FABRICATION.

10. REFER TO INTERIORS FOR SIGNAGE STANDARDS & REQUIREMENTS.

11. PROVIDE SIGNAGE IN STAIRWELLS AT EACH FLOOR, PER LIFE SAFETY CODE REQUIREMENTS.

OPENING LEGEND:

GL1 TINTED, IMPACT, SAFETY GLAZING
GL2 TINTED INSULATED, IMPACT, SAFETY GLAZING
GL3 TINTED INSULATED, IMPACT GLAZING
GL4 CLEAR GLAZING
GL5 CLEAR, SAFETY GLAZING
GL6 FIRE SAFETY GLAZING (CERAMIC)
GL7 DARK TINTED INSULATED, IMPACT, SAFETY GLAZING (SPANDREL GLAZING)
GL8 DARK TINTED INSULATED, IMPACT GLAZING (SPANDREL GLAZING)

HM HOLLOW METAL
GHM GALVANIZED HOLLOW METAL
AL ALUMINUM
STL STEEL
WD WOOD

COMMENTS:

1. EXTERIOR EXIT EGRESS DOOR ONLY- PROVIDE REQ'D HARDWARE.

2. PROVIDE SECURITY CARD READER ROUGH-IN.

3. PROVIDE ONITY CARD READER SYSTEM. SEE INTERIORS.

4. EXTERIOR DOOR TO BE PAINTED, COORDINATE DOOR COLOR W/ ARCHITECT PRIOR TO APPLICATION OF PAINT.

5. PROVIDE 4" TALL FRAME @ HEAD OF DOOR FRAME- SEE DETAIL 7/A610.

SYM	DESCRIPTION	DATE	APPR

NAVFAC

ANDERSON DRACE JOINT VENTURE

REGISTERED ARCHITECT Mark E. Lisher 2769 Biloxi, MS STATE OF MISSISSIPPI 1-17-12 SEAL

EGH ARCHITECTS eleyguildhardy.com A/E INFO

APPROVED

FOR COMMANDER NAVFAC

ACTIVITY

SATISFACTORY TO DATE JAN 19, 2012

DES PCW DRW PCW CHK KLK

DEPARTMENT OF THE NAVY
NAVAL FACILITIES ENGINEERING COMMAND SOUTHEAST
NAVAL FACILITIES ENGINEERING COMMAND
NAVAL AIR STATION JACKSONVILLE, FL
PT GULF-COAST
CORRY STATION
PENSACOLA, FLORIDA
BUILDING P-724 Corry "A" School BEQ
REVISED [2+0] MODULE DESIGN
OPENING SCHEDULE

SCALE: AS INDICATED
EPROJECT NO.: 10-045
CONSTR. CONTR. NO. N69450-10-C-0755
NAVFAC DRAWING NO. 15050434
SHEET 89 OF 204

A600

OPENING LEGEND:

GL1	TINTED, IMPACT, SAFETY GLAZING	HM	HOLLOW METAL
GL2	TINTED INSULATED, IMPACT, SAFETY GLAZING	GHM	GALVANIZED HOLLOW METAL
GL3	TINTED INSULATED, IMPACT GLAZING	AL	ALUMINUM
GL4	CLEAR GLAZING	STL	STEEL
GL5	CLEAR, SAFETY GLAZING	WD	WOOD
GL6	FIRE SAFETY GLAZING (CERAMIC)		
GL7	DARK TINTED INSULATED, IMPAC'T, SAFETY GLAZING (SPANDREL GLAZING)		
GL8	DARK TINTED INSULATED, IMPACT GLAZING (SPANDREL GLAZING)		

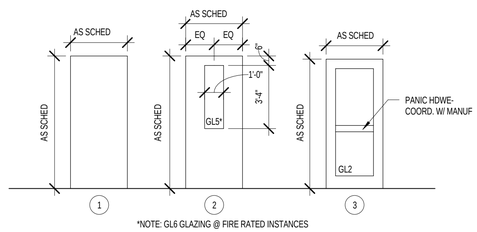

1 DOOR TYPES- BEQ
A601 1/4" = 1'-0"

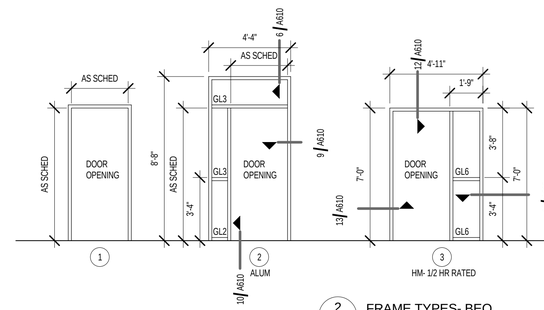

2 FRAME TYPES- BEQ
A601 1/4" = 1'-0"

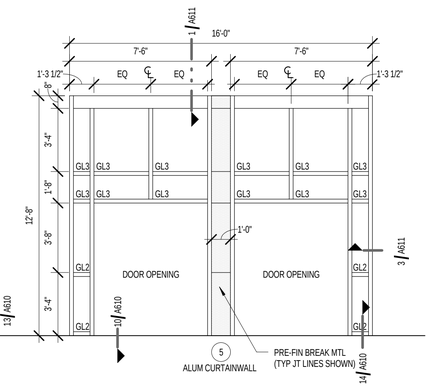

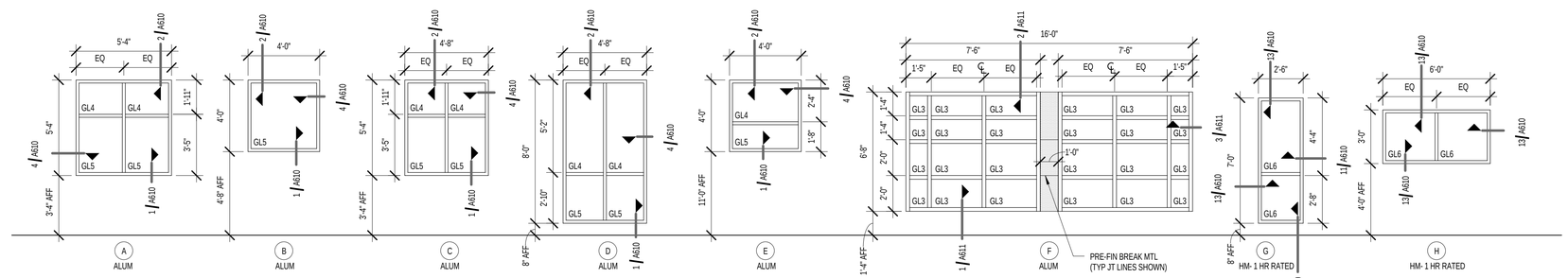

3 WINDOW TYPES- BEQ
A601 1/4" = 1'-0"

0' 2' 4' 8' 16'
SCALE: 1/4" = 1'- 0"

SYM	DESCRIPTION	DATE	APPR

NAVFAC

ANDERSON DRACE JOINT VENTURE

REGISTERED ARCHITECT Mark E. Lishen 2769 Biloxi, MS STATE OF MISSISSIPPI 1-17-12 SEAL

EGH ARCHITECTS eleyguildhardy.com A/E INFO

APPROVED

FOR COMMANDER NAVFAC

ACTIVITY

SATISFACTORY TO DATE JAN 19, 2012

DES PCW DRW PCW CHK KLK

DEPARTMENT OF THE NAVY
NAVAL FACILITIES ENGINEERING COMMAND SOUTHEAST
1P7 GULF-COAST
NAVAL AIR STATION, JACKSONVILLE, FL
CORRY STATION
PENSACOLA, FLORIDA

BUILDING P-724 Corry "A" School BEQ
REVISED [2+0] MODULE DESIGN

DOOR/FRAME/WINDOW TYPES

SCALE: AS INDICATED

EPROJECT NO.: 10-045

CONSTR. CONTR. NO.
N69450-10-C-0755

NAVFAC DRAWING NO.
15050435

SHEET 90 OF 204

A601

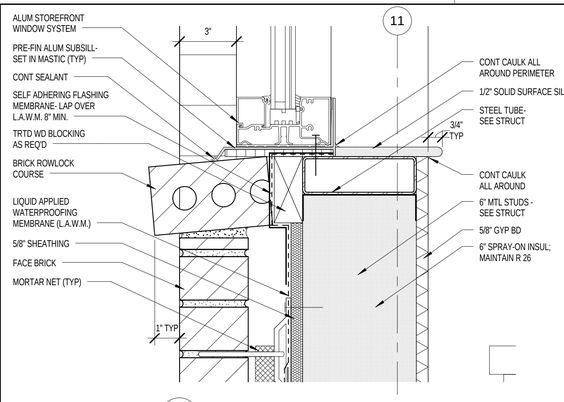

1 A310 A610 SILL DETAIL- WINDOW (TYP @ BRICK) 3" = 1'-0"

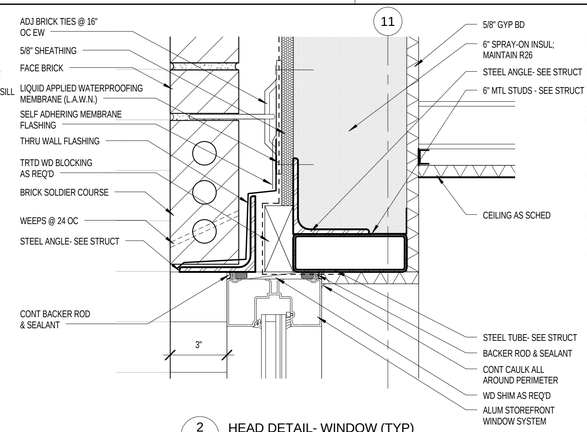

2 A310 A610 HEAD DETAIL- WINDOW (TYP) 3" = 1'-0"

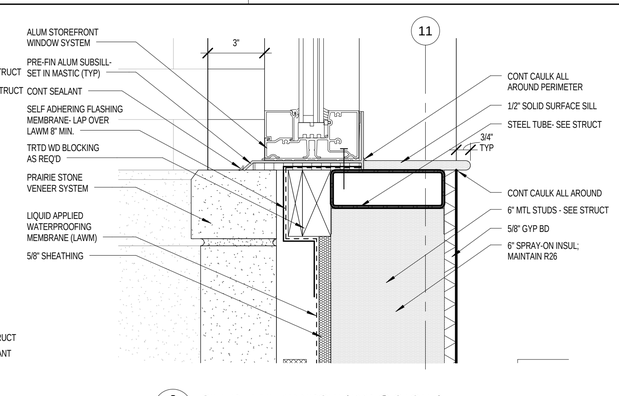

3 A310 A610 SILL DETAIL- WINDOW (TYP @ STONE) 3" = 1'-0"

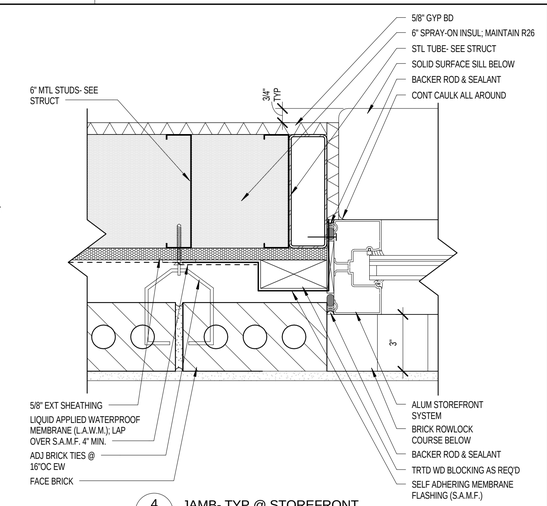

4 A601 A610 JAMB- TYP @ STOREFRONT 3" = 1'-0"

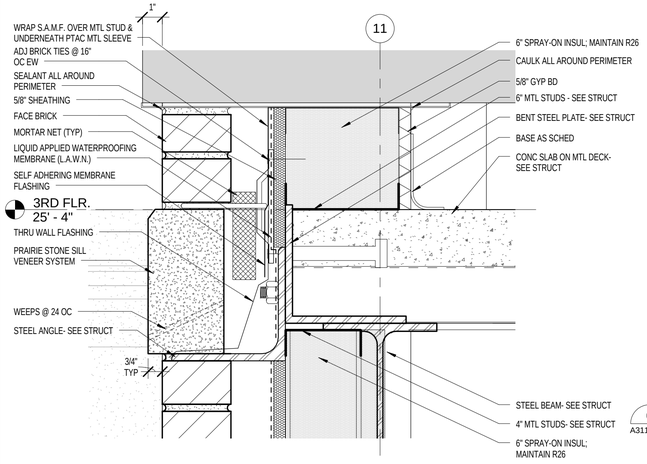

5 A310 A610 SILL DETAIL- STONE BAND (TYP) 3" = 1'-0"

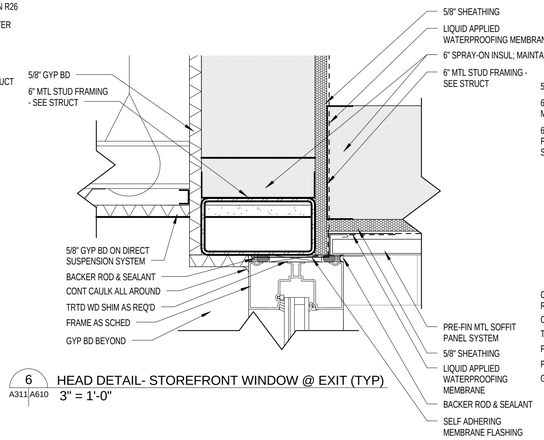

6 A311 A610 HEAD DETAIL- STOREFRONT WINDOW @ EXIT (TYP) 3" = 1'-0"

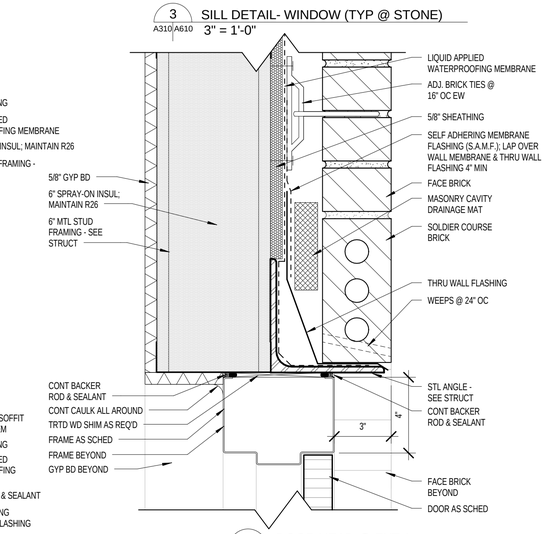

7 A610 DOOR HEAD @ EXT 1 3" = 1'-0"

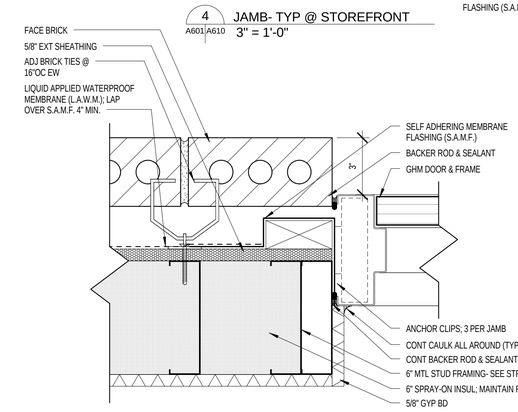

8 A610 DOOR JAMB @ EXT 1 3" = 1'-0"

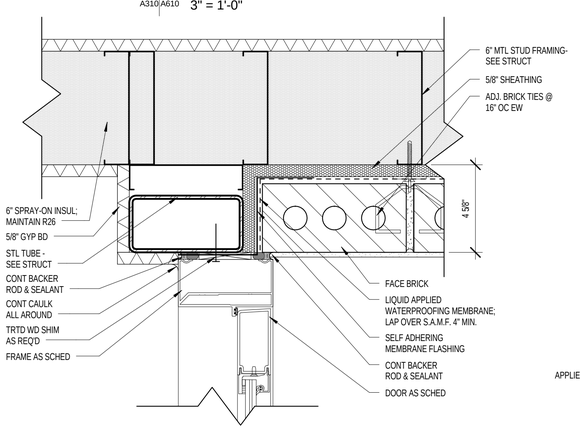

9 A601 A610 JAMB- @ EXT STOREFRONT DOOR 3" = 1'-0"

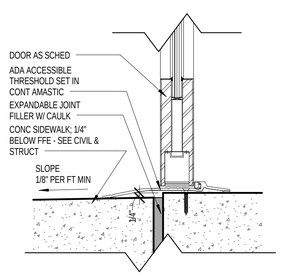

10 A601 A610 TYP THRESHOLD 3" = 1'-0"

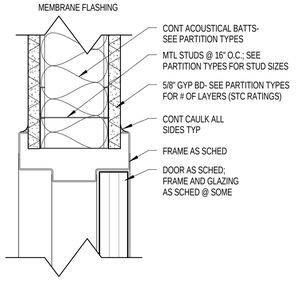

12 A601 A610 TYP HEAD/JAMB @ GYP BD 3" = 1'-0"

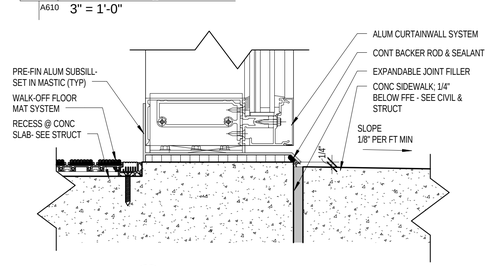

14 A601 A610 SILL- CURTAINWALL (TYP) 3" = 1'-0"

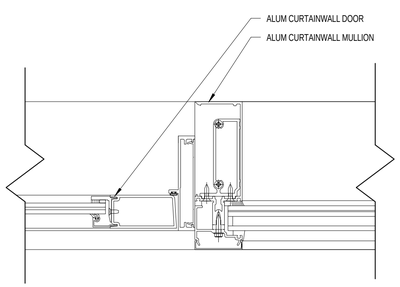

15 A610 JAMB @ CURTAINWALL (TYP) 3" = 1'-0"

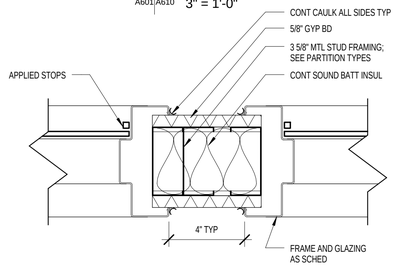

11 A105 A610 JAMB @ GYP BD- LAUNDRY WINDOW 3" = 1'-0"

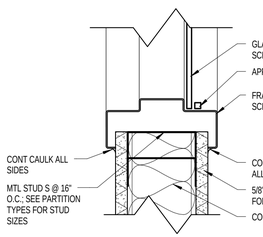

13 A601 A610 TYP HEAD/JAMB/SILL @ GYP BD 3" = 1'-0"

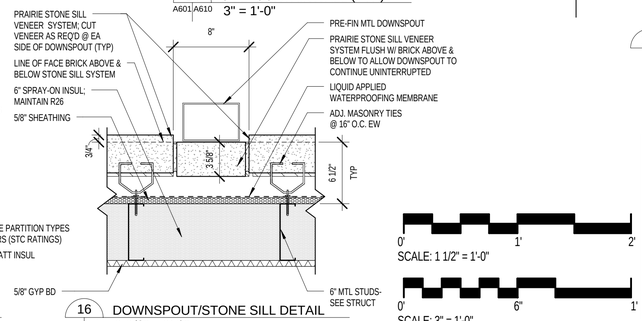

16 A610 DOWNSPOUT/STONE SILL DETAIL 1 1/2" = 1'-0"

SCALE: 1 1/2" = 1'-0"

SCALE: 3" = 1'-0"

GENERAL NOTES:

1. SEE PLANS AND FINISH SCHEDULE FOR WALL THICKNESSES & MATERIALS.
2. JOINTS SHALL BE A MINIMUM 3/8" AT ALL SIDES.
3. TOOL JOINTS TO ENSURE FULL CONTACT WITH ADHESION TO SUBSTRATE.
4. ENSURE THAT THE SUBSTRATE IS CLEAN AND DRY PRIOR TO APPLICATION OF SEALANT MATERIAL. PROVIDE PRIMER TO IMPROVE ADHESION OF SEALANT TO SUBSTRATE AS REQUIRED.
5. ALL STEEL LINTELS ADJACENT TO BRICK SHALL BE PAINTED TO MATCH BRICK COLOR.

SYM	DESCRIPTION	DATE	APPR

NAVFAC

ANDERSON DRACE JOINT VENTURE

REGISTERED ARCHITECT Mark E. Lisher 2769 Biloxi, MS STATE OF MISSISSIPPI 1-19-12 SEAL

EGH ARCHITECTS eleyguildhardy.com A/E INFO

APPROVED

FOR COMMANDER NAVFAC

ACTIVITY

SATISFACTORY TO DATE JAN 19, 2012

DES PCW DRW PCW CHK KLK

DEPARTMENT OF THE NAVY
NAVAL FACILITIES ENGINEERING COMMAND SOUTHEAST
NAVAL FACILITIES ENGINEERING COMMAND
NAVAL AIR STATION JACKSONVILLE, FL
IPT GULF COAST
CORRY STATION
PENSACOLA, FLORIDA

BUILDING P-724 Corry "A" School BEQ
REVISED [2+0] MODULE DESIGN

H/J/S DETAILS

SCALE: AS INDICATED

EPROJECT NO.: 10-045

CONSTR. CONTR. NO. N69450-10-C-0755

NAVFAC DRAWING NO. 15050436

SHEET 91 OF 204

A610

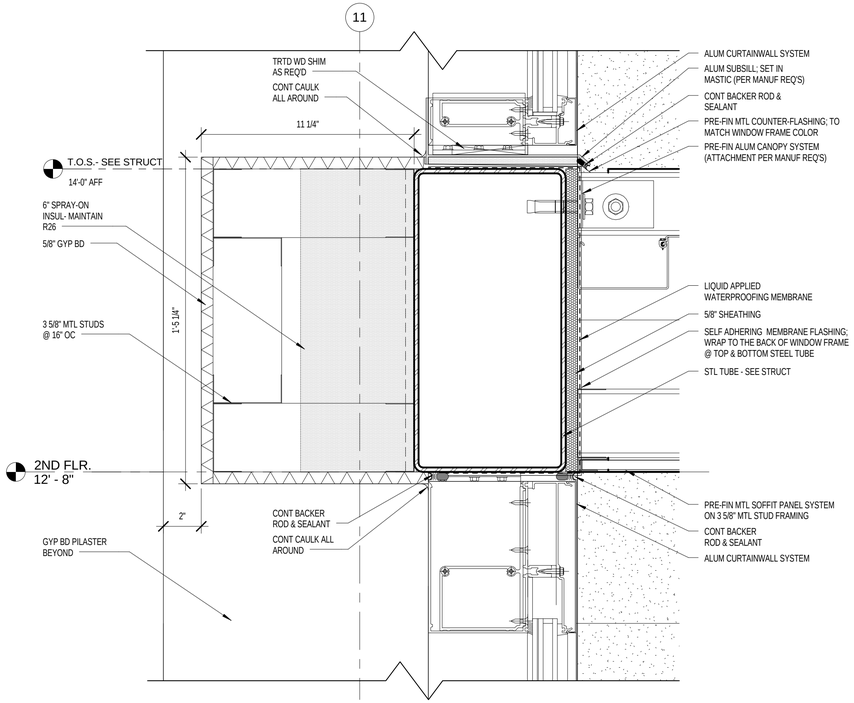

1 A310 A611 HEAD/SILL- LOBBY CURTAINWALL
3" = 1'-0"

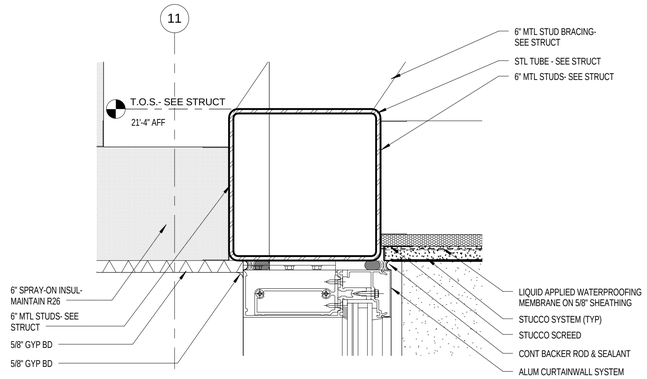

2 A510 A611 HEAD DETAIL- LOBBY CURTAINWALL
3" = 1'-0"

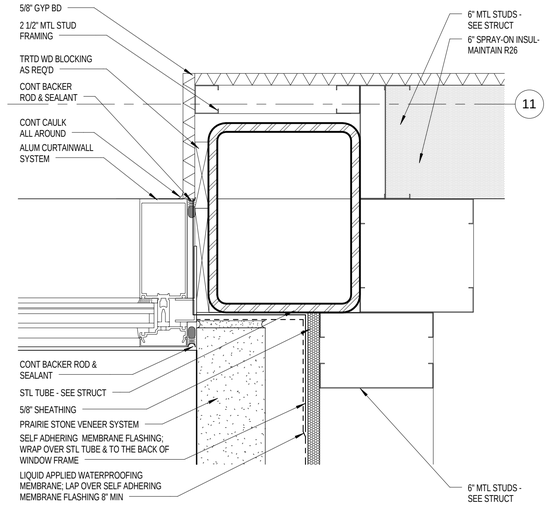

3 A501 A611 JAMB DETAIL- LOBBY CURTAINWALL
3" = 1'-0"

0' 6" 1'
SCALE: 3" = 1'-0"

SYM	DESCRIPTION	DATE	APPR

NAVFAC

ANDERSON DRACE JOINT VENTURE

REGISTERED ARCHITECT Mark E. Lisher 2769 Biloxi, MS STATE OF MISSISSIPPI 1-19-12 SEAL

EGH ARCHITECTS
eleyguildhardy.com
A/E INFO

APPROVED
FOR COMMANDER NAVFAC
ACTIVITY
SATISFACTORY TO DATE JAN 19, 2012

DES	DRW	CHK
PCW	PCW	KLK

DEPARTMENT OF THE NAVY
NAVAL FACILITIES ENGINEERING COMMAND SOUTHEAST
IPT GULFCOAST
NAVAL FACILITIES ENGINEERING COMMAND
NAVAL AIR STATION JACKSONVILLE, FL
CORRY STATION
PENSACOLA, FLORIDA

BUILDING P-724 Corry "A" School BEQ
REVISED [2+0] MODULE DESIGN

H/J/S DETAILS

SCALE: AS INDICATED
EPROJECT NO.: 10-045
CONSTR. CONTR. NO.
N69450-10-C-0755
NAVFAC DRAWING NO.
15050437
SHEET 92 OF 204

A611

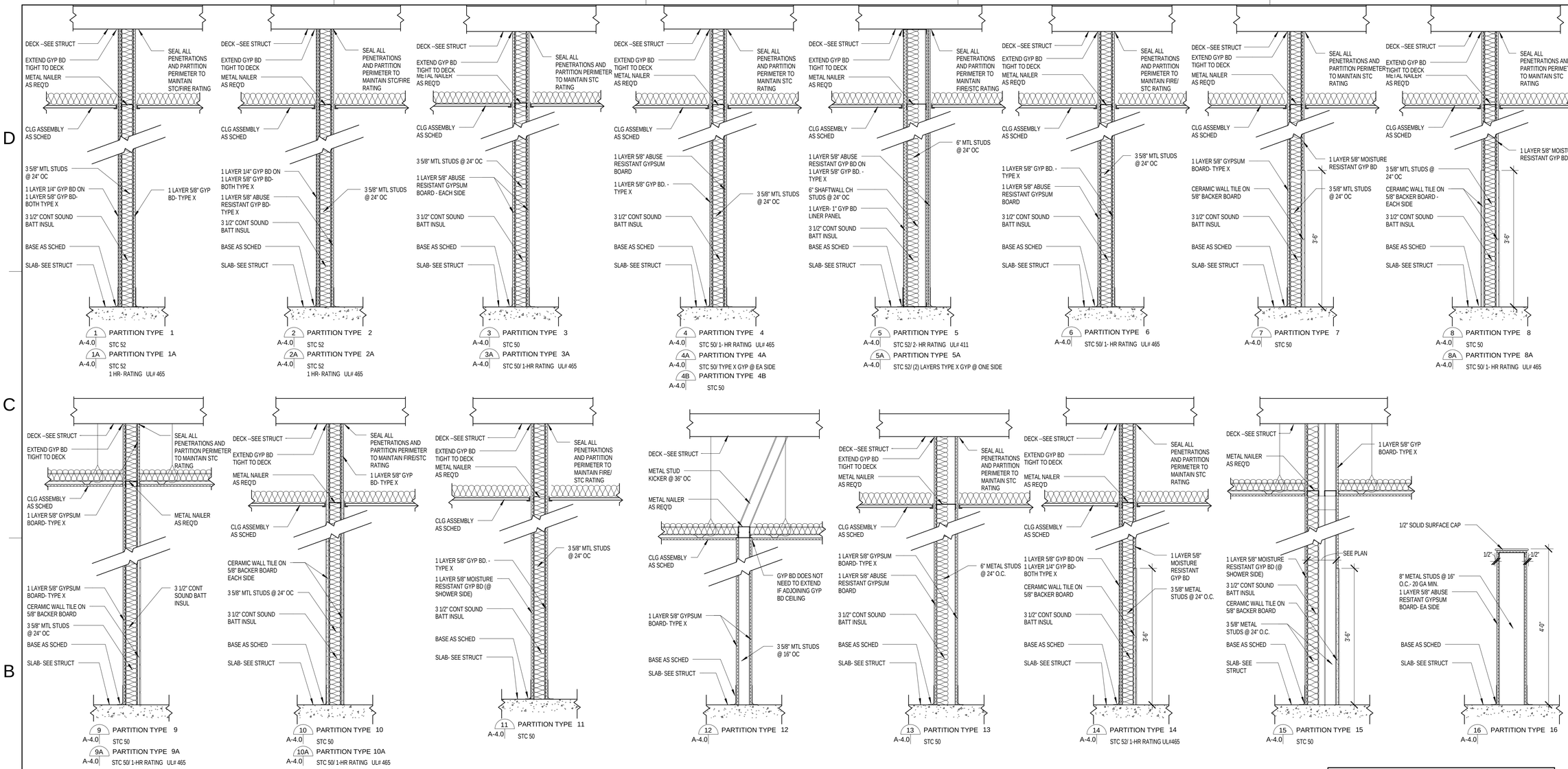

1 PARTITION TYPES- BEQ
A620 3/4" = 1'-0"

GENERAL NOTES- PARTITION TYPES:

1. PARTITION TYPES DO NOT ACCOUNT FOR LOCATIONS WHERE "SMOKE PARTITIONS" ARE REQUIRED. SEE LIFE SAFETY SHEETS LS101-LS104 TO IDENTIFY THESE LOCATIONS. "SMOKE PARTITIONS" SHALL BE SEALED AT ALL PENETRATIONS & PARTITION PERIMETERS. SMOKE DAMPERS SHALL BE PROVIDED AT ALL HVAC PENETRATIONS (SEE MECHANICAL). DOOR AND WINDOW ASSEMBLIES LOCATED IN PARTITIONS SHALL BE EQUIPPED W/ SEALS AND SWEEPS TO STOP THE PASSAGE OF SMOKE THROUGH THE OPENING.

2. PARTITION TYPES ARE INTENDED TO DESCRIBE BASIC MATERIALS & ASSEMBLIES. FURR-OUTS, FURR-DOWNS, REVEALS & OTHER DESIGN FEATURES ARE DESCRIBED ON OTHER SHEETS IN THIS PLAN SET.

3. FINAL PARTITION FINISHES ARE NOT INCLUDED ON PARTITION TYPES. SEE INTERIOR ELEVATIONS AND FINISH SCHEDULES FOR FINISHES.

4. PROVIDE TILE BACKER BOARD IN LIEU OF GYP BOARD AT ALL LOCATIONS SCHEDULED TO RECEIVE WALL TILE FINISH. SEE FINISH SCHEDULE.

5. CONTRACTOR SHALL SUBMIT FOR APPROVAL PROPOSED UL ASSEMBLY DESIGNS FOR FIRE RATED PARTITIONS PRIOR TO INSTALLATION OF SUCH PARTITIONS.

6. ALL FLOOR & CEILING ASSEMBLIES TO MAINTAIN MINIMUM STC 55 RATING.

7. PARTITION TYPES DO NOT ACCOUNT FOR LOAD BEARING VERSUS NON-LOAD BEARING LOCATIONS. SEE STRUCTURAL TO DETERMINE LOAD BEARING LOCATIONS. CONSTRUCTION OF LOAD BEARING PARTITIONS SHALL BE MODIFIED FROM THESE TYPES AS REQUIRED TO ACCOMMODATE DETAILING SHOWN ON STRUCTURAL SHEETS.

8. ABUSE RESISTANT GYP BD IS REQUIRED AT THE CORRIDOR SIDE OF ANY PARTITION TYPE.

9. 30 MIN. RATED CORRIDOR WALLS ARE SHOWN WITH 1 HR UL ASSEMBLY RATINGS.

0' 1' 2' 4'
SCALE: 3/4" = 1'-0"

SYM	DESCRIPTION	DATE	APPR

NAVFAC

ANDERSON DRACE JOINT VENTURE

REGISTERED ARCHITECT Mark E Lishen 2769 Biloxi, MS STATE OF MISSISSIPPI 1-17-12 SEAL

EGH ARCHITECTS eleyguildhardy.com A/E INFO

APPROVED

FOR COMMANDER NAVFAC

ACTIVITY

SATISFACTORY TO DATE JAN 19, 2012

DES PCW DRW PCW CHK KLK

DEPARTMENT OF THE NAVY
NAVAL FACILITIES ENGINEERING COMMAND SOUTHEAST
NAVAL AIR STATION JACKSONVILLE, FL
PT GULF-COAST
CORRY STATION
PENSACOLA, FLORIDA

BUILDING P-724 Corry "A" School BEQ
REVISED [2+0] MODULE DESIGN

PARTITION TYPES

SCALE: AS INDICATED

EPROJECT NO.: 10-045

CONSTR. CONTR. NO. N69450-10-C-0755

NAVFAC DRAWING NO. 15050438

SHEET 93 OF 204

A620

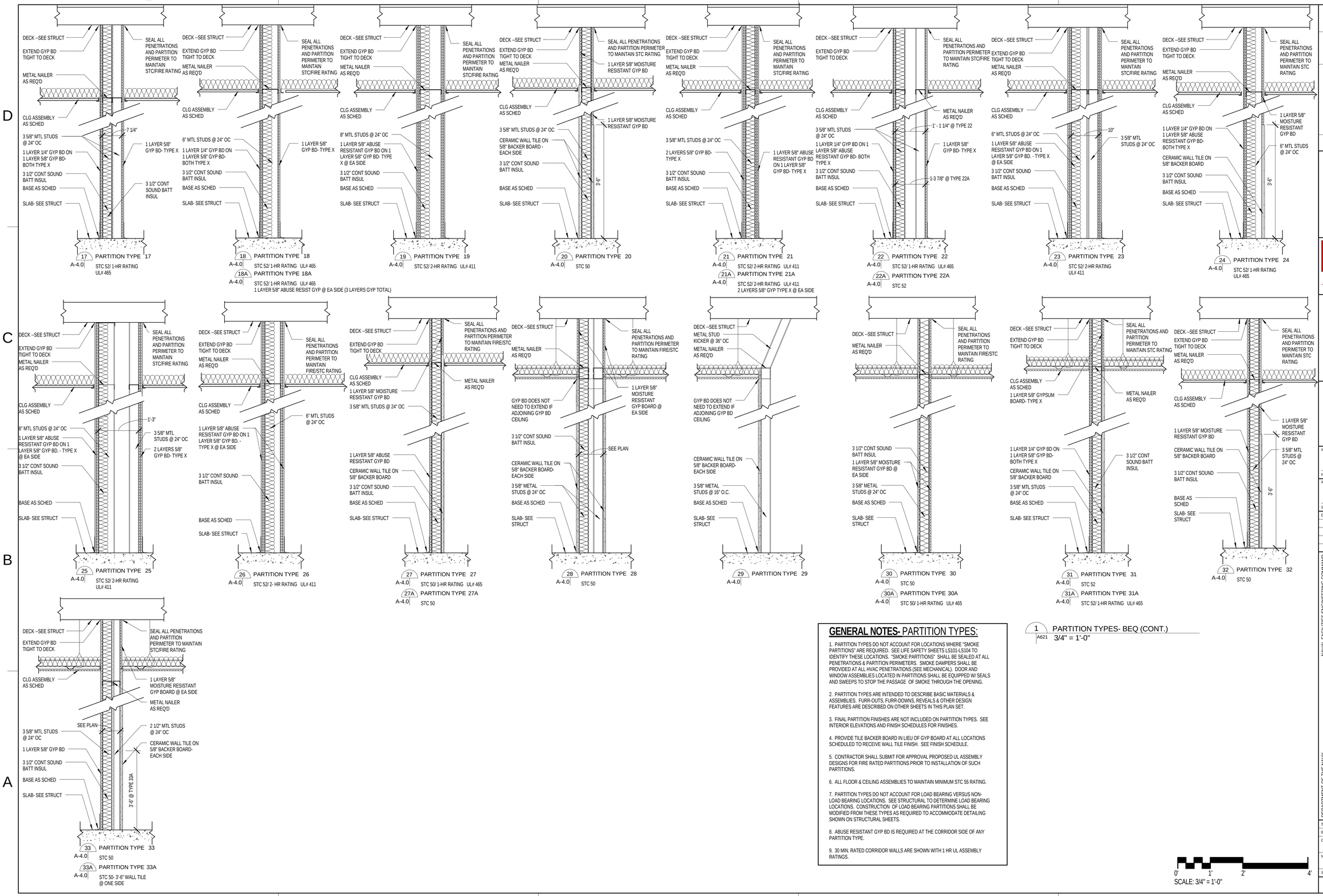

1 PARTITION TYPES- BEQ (CONT.)
A621 3/4" = 1'-0"

GENERAL NOTES- PARTITION TYPES:

1. PARTITION TYPES DO NOT ACCOUNT FOR LOCATIONS WHERE "SMOKE PARTITIONS" ARE REQUIRED. SEE LIFE SAFETY SHEETS LS101-LS104 TO IDENTIFY THESE LOCATIONS. "SMOKE PARTITIONS" SHALL BE SEALED AT ALL PENETRATIONS & PARTITION PERIMETERS. SMOKE DAMPERS SHALL BE PROVIDED AT ALL HVAC PENETRATIONS (SEE MECHANICAL). DOOR AND WINDOW ASSEMBLIES LOCATED IN PARTITIONS SHALL BE EQUIPPED W/ SEALS AND SWEEPS TO STOP THE PASSAGE OF SMOKE THROUGH THE OPENING.

2. PARTITION TYPES ARE INTENDED TO DESCRIBE BASIC MATERIALS & ASSEMBLIES. FURR-OUTS, FURR-DOWNS, REVEALS & OTHER DESIGN FEATURES ARE DESCRIBED ON OTHER SHEETS IN THIS PLAN SET.

3. FINAL PARTITION FINISHES ARE NOT INCLUDED ON PARTITION TYPES. SEE INTERIOR ELEVATIONS AND FINISH SCHEDULES FOR FINISHES.

4. PROVIDE TILE BACKER BOARD IN LIEU OF GYP BOARD AT ALL LOCATIONS SCHEDULED TO RECEIVE WALL TILE FINISH. SEE FINISH SCHEDULE.

5. CONTRACTOR SHALL SUBMIT FOR APPROVAL PROPOSED UL ASSEMBLY DESIGNS FOR FIRE RATED PARTITIONS PRIOR TO INSTALLATION OF SUCH PARTITIONS.

6. ALL FLOOR & CEILING ASSEMBLIES TO MAINTAIN MINIMUM STC 55 RATING.

7. PARTITION TYPES DO NOT ACCOUNT FOR LOAD BEARING VERSUS NON-LOAD BEARING LOCATIONS. SEE STRUCTURAL TO DETERMINE LOAD BEARING LOCATIONS. CONSTRUCTION OF LOAD BEARING PARTITIONS SHALL BE MODIFIED FROM THESE TYPES AS REQUIRED TO ACCOMMODATE DETAILING SHOWN ON STRUCTURAL SHEETS.

8. ABUSE RESISTANT GYP BD IS REQUIRED AT THE CORRIDOR SIDE OF ANY PARTITION TYPE.

9. 30 MIN. RATED CORRIDOR WALLS ARE SHOWN WITH 1 HR UL ASSEMBLY RATINGS.

0' 1' 2' 4'
SCALE: 3/4" = 1'-0"

SYM	DESCRIPTION	DATE	APPR

NAVFAC

ANDERSON DRACE JOINT VENTURE

REGISTERED ARCHITECT Mark E. Lisher 2769 Biloxi, MS STATE OF MISSISSIPPI 1-17-12 SEAL

EGH ARCHITECTS eleyguildhardy.com A/E INFO

APPROVED
FOR COMMANDER NAVFAC
ACTIVITY
SATISFACTORY TO DATE JAN 19, 2012
IDES PCW DRW PCW CHK KLK

DEPARTMENT OF THE NAVY
NAVAL FACILITIES ENGINEERING COMMAND
IPT GULF COAST
CORRY STATION

NAVAL FACILITIES ENGINEERING COMMAND SOUTHEAST
NAVAL AIR STATION JACKSONVILLE, FL
PENSACOLA, FLORIDA

BUILDING P-724 Corry "A" School BEQ
REVISED [2+0] MODULE DESIGN

PARTITION TYPES

SCALE: AS INDICATED
EPROJECT NO.: 10-045
CONSTR. CONTR. NO. N69450-10-C-0755
NAVFAC DRAWING NO. 15050439
SHEET 94 OF 204
A621