MATCHLINE SHEET CP104

MATCHLINE SHEET CP110

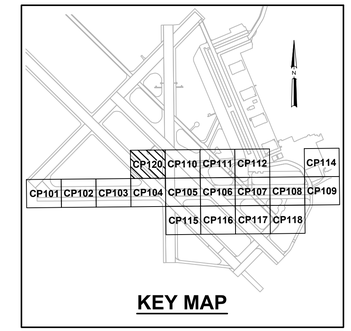

KEY MAP

NOTES:

1. SEE SHEET NO. GI003 FOR GENERAL NOTES AND LEGEND.
2. ALL STRIPING SHALL BE IN ACCORDANCE WITH U.S. DEPARTMENT OF TRANSPORTATION FEDERAL AVIATION ADMINISTRATION STANDARDS FOR AIRPORT MARKINGS, AC NO. 150/5340 (CURRENT EDITION AT TIME OF BID), NAVAIR 51-50AAA LATEST EDITION, AND SPECIFICATION 32 17 23.
3. REPAIR ALL DAMAGE CAUSED BY PAINT REMOVAL OPERATIONS (I.E. JOINT SEALANT DAMAGE) TO PRECONSTRUCTION CONDITION OR BETTER.
4. DIMENSIONS TO EXISTING STRIPING EDGES. SEE STRIPING DETAILS SHEET C508 FOR LOCATION OF DIMENSIONS FOR STRIPING.

KEY NOTES:

1. TAXIWAY CENTERLINE STRIPING, 6" WIDE, YELLOW WITH BLACK OUTLINE (ON PCC ONLY) IAW FAA AC 150/5340 (CURRENT EDITION AT TIME OF BID), NAVAIR 51-50AAA LATEST EDITION, AND SPECIFICATION 32 17 23. SEE GEOMETRY PLANS FOR CENTERLINE GEOMETRY.
7. EXISTING RUNWAY SIDE STRIPES TO REMAIN
8. EXISTING TOUCHDOWN ZONE STRIPING TO REMAIN
9. EXISTING RUNWAY CENTERLINE STRIPING TO REMAIN

30 0 30 60
SCALE: 1"=30' FEET

STM	DESCRIPTION	DATE	APPR
0	ISSUED FOR BID	8 JUN 15	

NAVFAC

REGISTERED PROFESSIONAL ENGINEER JOHN B. BEAN 19302 OKLAHOMA 08 JUNE 2015
SEAL

leidos
LEIDOS ENGINEERING, LLC
ONE WEST 3RD ST.
TULSA, OK 74103

DELTA AIRPORT CONSULTANTS, INC.
9711 Farrar Court, Suite 100
Richmond, Virginia 23236
phone: (804) 275-8301 • fax: (804) 275-8371
www.deltairport.com
Delta Project No. 14072 A/E INFO

APPROVED
FOR COMMANDER NAVFAC
ACTIVITY
SATISFACTORY TO DATE
DES SMS DRW MLT CHK HWM
PM / DM
BRANCH MANAGER
CHIEF ENG / ARCH
FIRE PROTECTION

DEPARTMENT OF THE NAVY
NAVAL FACILITIES ENGINEERING COMMAND
CIBL CORE
NAVAL FACILITIES ENGINEERING COMMAND SOUTHEAST
NAVALAIR STATION JACKSONVILLE
NAS CORPUS CHRISTI
CORPUS CHRISTI, TEXAS
NAS CORPUS CHRISTI AIRFIELD REPAIRS
TAXIWAY 'E'
STRIPING PLAN SHEET 18 OF 18

SCALE: AS NOTED
EPROJECT NO.:
CONSTR. CONTR. NO.
NAVFAC DRAWING NO.
15095214
SHEET 86 OF 145
CP120

DRAWFORM REVISION: 5 APRIL 2012

FILE NAME: P:\FRB\1650-TUL\CIV\2051134800_NAS_CCA_Repair\20_DESIGN\40_CAD\C\134800-03b-CP120.dwg LAYOUT NAME: Layout PLOTTED: Tuesday, June 09, 2015 - 11:53am USER: tobernm

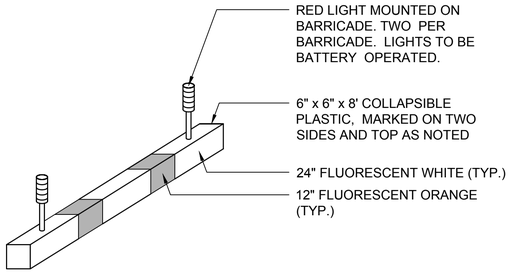

NOTES:

1. COLLAPSIBLE PLASTIC BARRICADES SHALL BE PLACED 25 FEET ON CENTER ACROSS FULL WIDTH OF PAVEMENT.
2. PROVIDE A FAA APPROVED (FAA AC 150/5370-2E), LIGHTED RUNWAY CLOSURE MARKER AS A TEMPORARY CLOSED MARKING TO WARN PILOTS OF CLOSED RUNWAYS AND TAXIWAYS.
3. LOCATION OF TEMPORARY CLOSED MARKINGS SHALL BE COORDINATED WITH THE CONTRACTING OFFICER.

1 TEMPORARY MOVEMENT AREA AIRFIELD BARRICADE DETAIL
NOT TO SCALE

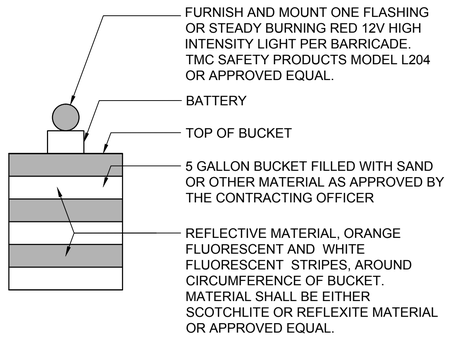

NOTES

1. FLASHING LIGHT SHALL BE CLAMPED TO BUCKET BARRICADE OR MOUNTED TO LID.
2. FOR AIRSIDE USE ONLY.
3. CONTRACTOR SHALL USE BUCKET BARRICADES TO DELINEATE HAUL ROADS ALONG ACTIVE AIRCRAFT MOVEMENT AREAS. MAXIMUM 100' SPACING, 50' ON CURVES.

2 BUCKET BARRICADE DETAIL
NOT TO SCALE

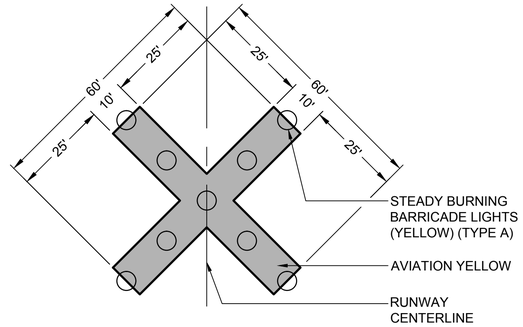

NOTES

1. CLOSED MARKERS SHALL BE INSTALLED AS THE FIRST ITEM OF WORK.
2. THE CLOSED MARKERS MAY BE CONSTRUCTED OF 40 POUND ROOFING PAPER, SNOW FENCE, OR ANY OTHER MATERIAL APPROVED BY THE CONTRACTING OFFICER.
3. MAKE FREQUENT INSPECTIONS OF THE MARKINGS AND MAKE PROMPT REPAIRS AS NECESSARY.
4. SCHEDULE THE CLOSING OF THE RUNWAYS AT LEAST ONE WEEK IN ADVANCE WITH THE CONTRACTING OFFICER.
5. LIGHTS REQUIRED IF THE AREA BEING MARKED IS TO BE CLOSED AT NIGHT.

3 LIGHTED CLOSED RUNWAY MARKER DETAIL
NOT TO SCALE

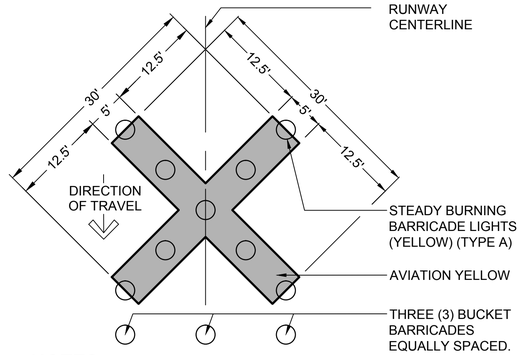

NOTES

1. CLOSED MARKERS SHALL BE INSTALLED AS THE FIRST ITEM OF WORK.
2. THE CLOSED MARKERS MAY BE CONSTRUCTED OF 40 POUND ROOFING PAPER, SNOW FENCE, OR ANY OTHER MATERIAL APPROVED BY THE CONTRACTING OFFICER.
3. MAKE FREQUENT INSPECTIONS OF THE MARKINGS AND MAKE PROMPT REPAIRS AS NECESSARY.
4. SCHEDULE THE CLOSING OF THE RUNWAYS AT LEAST ONE WEEK IN ADVANCE WITH THE CONTRACTING OFFICER.
5. LIGHTS REQUIRED IF THE AREA BEING MARKED IS TO BE CLOSED AT NIGHT.

4 LIGHTED CLOSED TAXIWAY MARKER DETAIL
NOT TO SCALE

SYM	DESCRIPTION	DATE	APPR
0	ISSUED FOR BID	8 JUN 15	

NAVFAC

REGISTERED PROFESSIONAL ENGINEER JOHN B. BEAN 19302 OKLAHOMA 08 JUNE 2015
SEAL

leidos
LEIDOS ENGINEERING, LLC
ONE WEST 3RD ST.
TULSA, OK 74103

DELTA AIRPORT CONSULTANTS, INC.
9711 Farrar Court, Suite 100
Richmond, Virginia 23236
phone: (804) 275-8301 • fax: (804) 275-8371
www.deltaairport.com
Delta Project No. 14072 A/E INFO

APPROVED
FOR COMMANDER NAVFAC
ACTIVITY
SATISFACTORY TO DATE
DES. SMS | DRW MLT | CHK HWM
PM / DM
BRANCH MANAGER
CHIEF ENG / ARCH
FIRE PROTECTION

DEPARTMENT OF THE NAVY
NAVAL FACILITIES ENGINEERING COMMAND
CIBL CORE
NAVAL FACILITIES ENGINEERING COMMAND SOUTHEAST
NAVAL AIR STATION JACKSONVILLE
NAS CORPUS CHRISTI
CORPUS CHRISTI, TEXAS
NAS CORPUS CHRISTI AIRFIELD REPAIRS
TAXIWAY 'E'
BARRICADE DETAILS

SCALE: AS NOTED
EPROJECT NO.:
CONSTR. CONTR. NO.
NAVFAC DRAWING NO.
15095215
SHEET 87 OF 145
C-501
DRAWFORM REVISION: 5 APRIL 2012

FILE NAME: P:\FDB\1650-TUL\CIV\205113480O_NAS_CCA_Repair\20_DESIGN\40_CAD\C\134800-03b-C-501.dwg LAYOUT NAME: Layout.dwg PLOTTED: Tuesday, June 09, 2015 - 11:59am USER: toberm

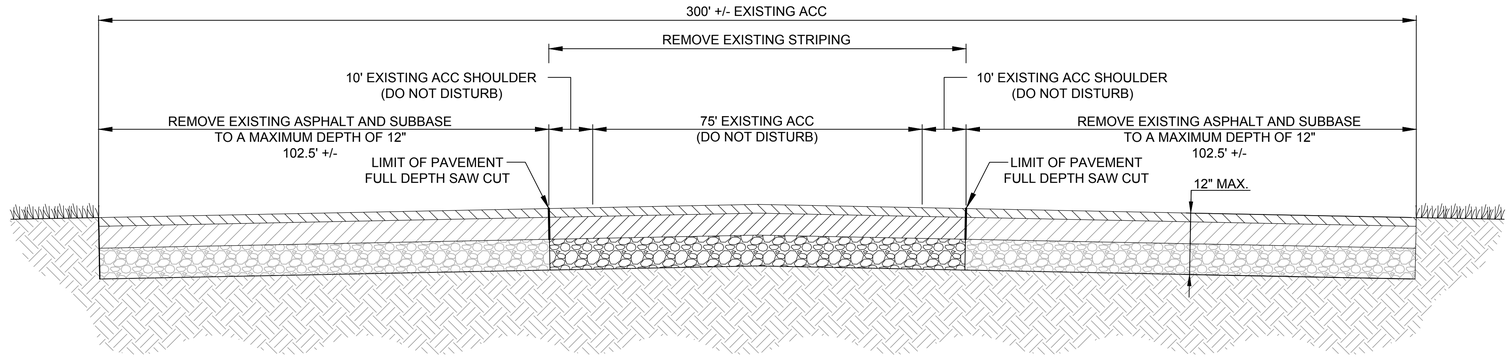

1 TAXIWAY 'E' DEMOLITION SECTION

NOT TO SCALE

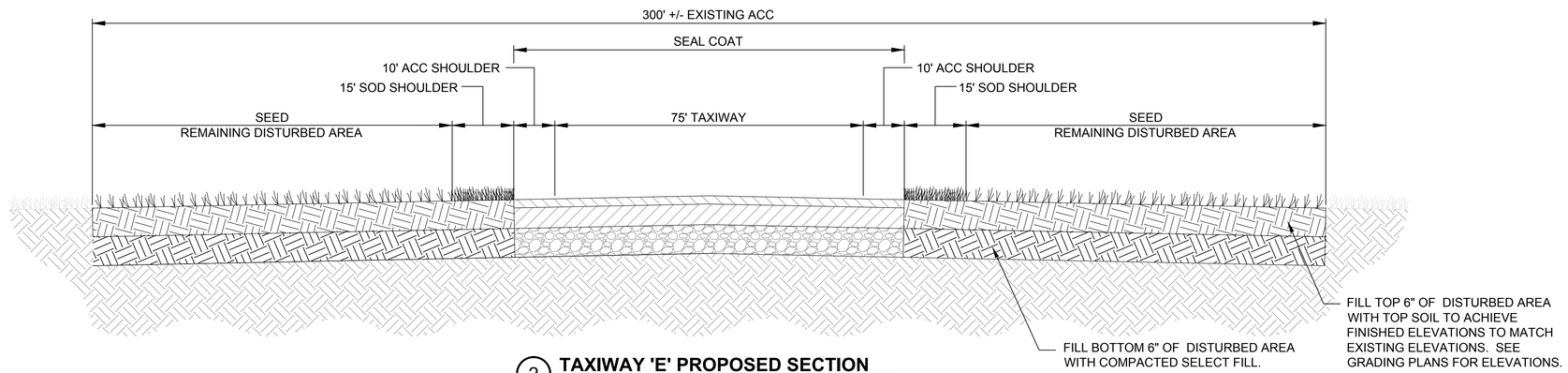

2 TAXIWAY 'E' PROPOSED SECTION

NOT TO SCALE

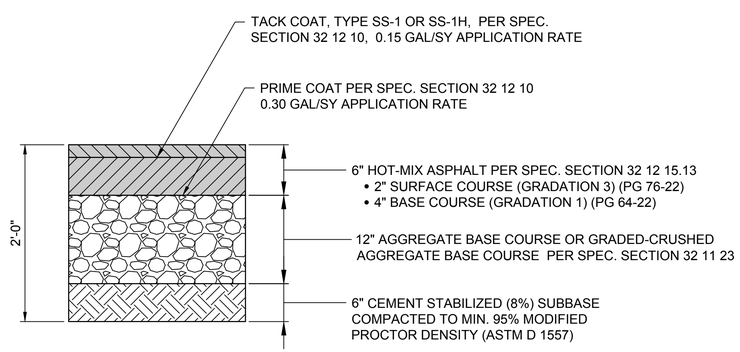

3 TYPICAL ASPHALT PAVEMENT SECTION

NOT TO SCALE

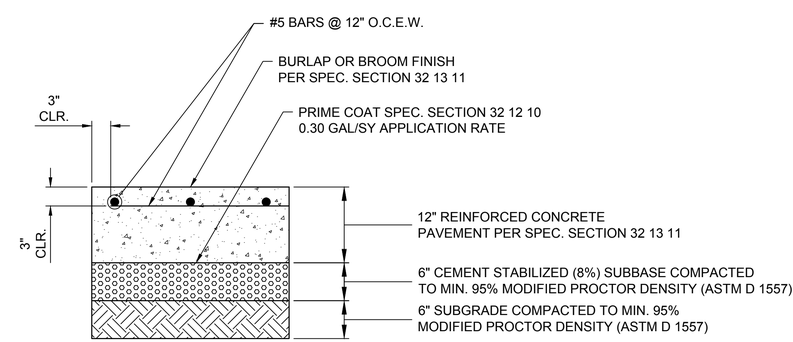

NOTE:
1. PRIME COAT CAN BE EXCLUDED IF CONCRETE PLACEMENT IS PLANNED WITHIN 2 HOURS OF SUBBASE PREPARATION

4 TYPICAL REINFORCED CONCRETE SECTION

NOT TO SCALE

STM	DESCRIPTION	DATE	APPR
0	ISSUED FOR BID	8 JUN 15	

NAVFAC

REGISTERED PROFESSIONAL ENGINEER JOHN B. BEAN 19302 OKLAHOMA 08 JUNE 2015 SEAL

leidos
LEIDOS ENGINEERING, LLC
ONE WEST 3RD ST.
TULSA, OK 74103

DELTA AIRPORT CONSULTANTS, INC.
6711 Farrar Court, Suite 100
Richmond, Virginia 23236
phone: (804) 275-8301 • fax: (804) 275-8371
www.deltaairport.com
Delta Project No. 14072 A/E INFO

APPROVED
FOR COMMANDER NAVFAC
ACTIVITY
SATISFACTORY TO DATE
DES SMS DRW MLT CHK HWM
PM / DM
BRANCH MANAGER
CHIEF ENG / ARCH
FIRE PROTECTION

DEPARTMENT OF THE NAVY
NAVAL FACILITIES ENGINEERING COMMAND
NAVAL FACILITIES ENGINEERING COMMAND SOUTHEAST
NAVAL AIR STATION JACKSONVILLE
CIBL CORE
NAS CORPUS CHRISTI
CORPUS CHRISTI, TEXAS
NAS CORPUS CHRISTI AIRFIELD REPAIRS
TAXIWAY 'E'
TAXIWAY SECTIONS AND DETAILS

SCALE: AS NOTED
EPROJECT NO.:
CONSTR. CONTR. NO.
NAVFAC DRAWING NO.
15095216
SHEET 88 OF 145
C-502
DRAWFORM REVISION: 5 APRIL 2012

FILE NAME: P:\FDB\16150-TUL\CIV\2051134800_NAS_CCA_Repair\20_DESIGN\40_CAD\C\1348000-03b-C-502.dwg LAYOUT NAME: Layout PLOTTED: Tuesday, June 09, 2015 - 11:59am USER: toberm

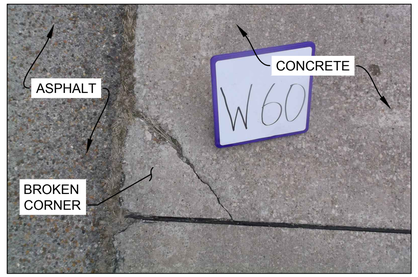

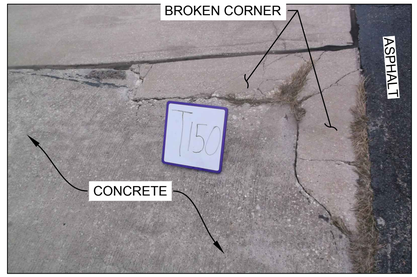

1 **TYPICAL FULL DEPTH REPLACEMENT**
NOT TO SCALE

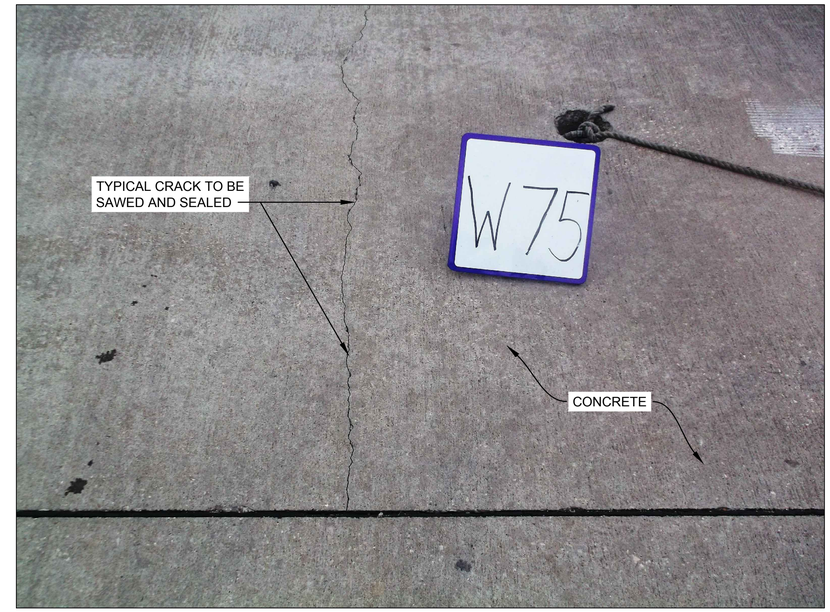

2 **TYPICAL CRACK REPAIR**
NOT TO SCALE

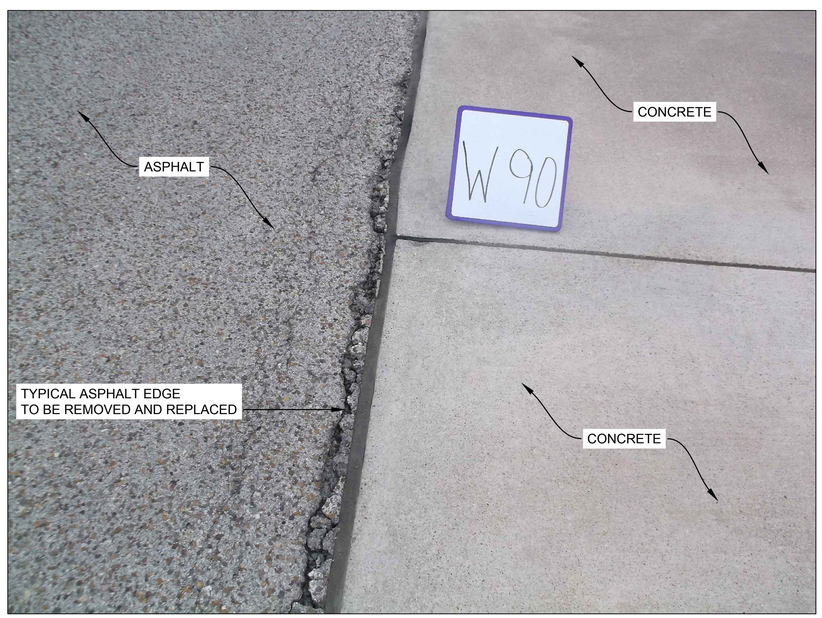

3 **TYPICAL ASPHALT EDGE REPLACEMENT**
NOT TO SCALE

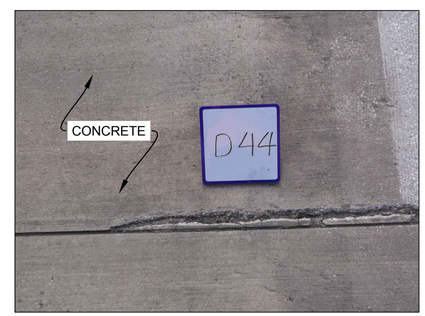

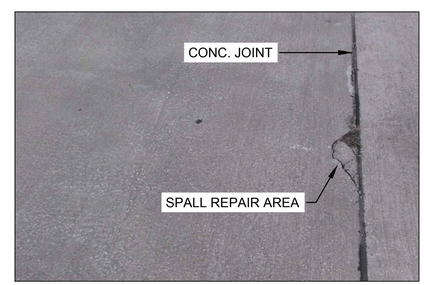

4 **TYPICAL SPALL REPAIR**
NOT TO SCALE

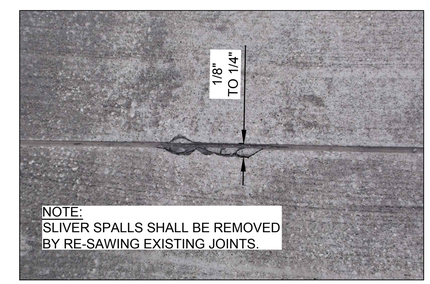

5 **TYPICAL SLIVER SPALL**
NOT TO SCALE

SYM	DESCRIPTION	DATE	APPR.
0	ISSUED FOR BID	8 JUN 15	

NAVFAC

REGISTERED PROFESSIONAL ENGINEER JOHN B. BEAN 19302 OKLAHOMA 08 JUNE 2015
SEAL

leidos
LEIDOS ENGINEERING, LLC
ONE WEST 3RD ST.
TULSA, OK 74103

DELTA AIRPORT CONSULTANTS, INC.
6711 Farrar Court, Suite 100
Richmond, Virginia 23236
phone: (804) 275-8301 • fax: (804) 275-8371
www.deltaairport.com
Delta Project No. 14072 A/E INFO

APPROVED
FOR COMMANDER NAVFAC
ACTIVITY
SATISFACTORY TO DATE
DES SMS DRW MLT CHK HWM
PM / DM
BRANCH MANAGER
CHIEF ENG / ARCH
FIRE PROTECTION

DEPARTMENT OF THE NAVY
NAVAL FACILITIES ENGINEERING COMMAND
CIBL CORE
NAVAL FACILITIES ENGINEERING COMMAND SOUTHEAST
NAVAL AIR STATION JACKSONVILLE
NAS CORPUS CHRISTI
CORPUS CHRISTI, TEXAS
NAS CORPUS CHRISTI AIRFIELD REPAIRS
TAXIWAY 'E'
CRACK REPAIR DETAILS SHEET 1 OF 3

SCALE: AS NOTED
EPROJECT NO.:
CONSTR. CONTR. NO.
NAVFAC DRAWING NO. 15095217
SHEET 89 OF 145
C-503
DRAWFORM REVISION: 5 APRIL 2012

FILE NAME: P:\FRB\1650-TUL\CIV\2051134800_NAS_CCA_Repair\20_DESIGN\40_CAD\C\134800-03a-C-503.dwg LAYOUT NAME: Layout PLOTTED: Tuesday, June 09, 2015 - 11:59am USER: toberm

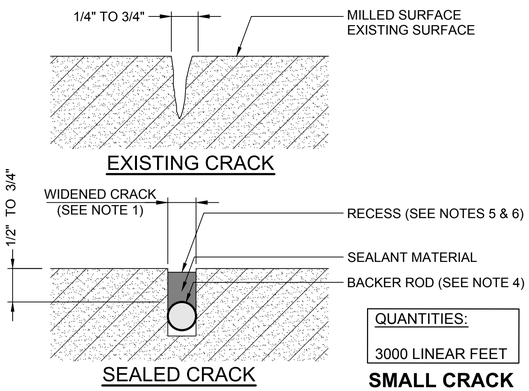

QUANTITIES:

3000 LINEAR FEET

SMALL CRACK ASPHALT REPAIR DETAIL

1 NOT TO SCALE

SMALL CRACKS (1/4" TO 3/4")

PREPARATION:

1. WIDEN TO A NOMINAL WIDTH OF 1/8" GREATER THAN THE EXISTING NOMINAL OR AVERAGE WIDTH. THE DEPTH OF THE ROUTED OR SAWN (CONTRACTOR OPTION) CRACK SHOULD BE APPROXIMATELY 3/4" AND PRODUCE VERTICAL FACES.
2. CLEAN CRACK USING A WATER BLASTER OR WIRE BRUSHES, AND THEN CLEAN WITH COMPRESSED AIR.
3. CLEAN AND INSPECT WIDENED CRACK TO ENSURE IT IS DRY AND FREE OF DEBRIS AND LOOSE MATERIAL.
4. INSTALL BACKER ROD IF CRACK HAS A DEPTH GREATER THAN 3/4" DEEP. IF THE DEPTH OF CRACK IS NOT DEEP ENOUGH TO ACCOMMODATE THE BACKER ROD AND MAINTAIN A SEALANT DEPTH OF 1/2" TO 3/4", THEN THE CRACK CAN BE ROUTED OR THE BACKER ROD MATERIAL OMITTED.

SEALING:

5. FOR AREAS WHICH WILL RECEIVE AN OVERLAY - FILL CRACKS WITH SEALANT SUCH THAT THE FINISHED PRODUCT IS RECESSED A MINIMUM OF 1/4" BELOW THE EXISTING MATERIAL'S SURFACE TO PREVENT THE NEW MATERIAL FROM BLEEDING THROUGH THE SUBSEQUENT OVERLAY.
6. FOR AREAS WHICH WILL NOT RECEIVE AN OVERLAY - FILL CRACKS WITH SEALANT SUCH THAT THE FINISHED PRODUCT IS AT OR SLIGHTLY BELOW (EQUAL TO OR LESS THAN 1/8") THE EXISTING MATERIAL'S SURFACE.
7. USE A SQUEEGEE TO REMOVE ANY EXCESS SEALANT FROM THE PAVEMENT.

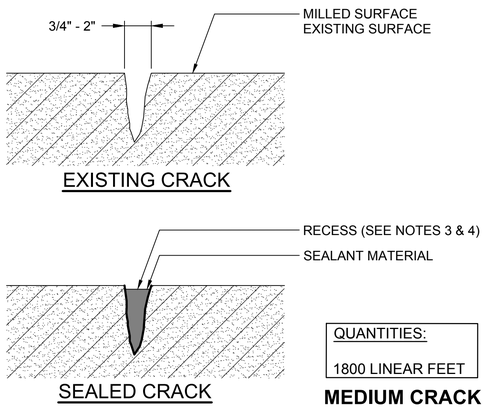

QUANTITIES:

1800 LINEAR FEET

MEDIUM CRACK ASPHALT REPAIR DETAIL

2 NOT TO SCALE

MEDIUM CRACKS (3/4" TO 2")

PREPARATION:

1. CLEAN CRACK USING A WATER BLASTER OR WIRE BRUSHES, AND THEN CLEAN WITH COMPRESSED AIR.
2. CLEAN AND INSPECT CRACK TO ENSURE IT IS DRY AND FREE OF DEBRIS AND LOOSE MATERIAL.

SEALING:

3. FOR AREAS WHICH WILL RECEIVE AN OVERLAY - FILL CRACKS WITH A SEALANT SUCH THAT THE FINISHED PRODUCT IS RECESSED A MINIMUM OF 1/4" BELOW THE EXISTING MATERIAL'S SURFACE TO PREVENT THE NEW MATERIAL FROM BLEEDING THROUGH THE SUBSEQUENT OVERLAY.
4. FOR AREAS WHICH WILL NOT RECEIVE AN OVERLAY - FILL CRACKS WITH A SEALANT SUCH THAT THE FINISHED PRODUCT IS AT OR SLIGHTLY BELOW (EQUAL TO OR LESS THAN 1/8") THE EXISTING MATERIAL'S SURFACE.
5. USE A SQUEEGEE TO REMOVE ANY EXCESS SEALANT FROM THE PAVEMENT.

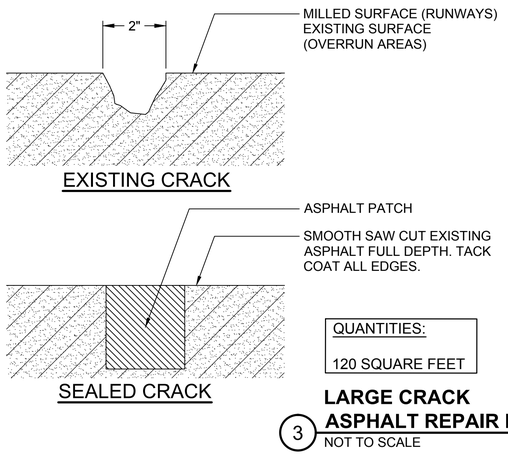

QUANTITIES:

120 SQUARE FEET

LARGE CRACK ASPHALT REPAIR DETAIL

3 NOT TO SCALE

LARGE CRACKS (2"+)

PREPARATION:

1. TREAT AS A POTHOLE REPAIR.
2. USING A SAW, CUT AWAY DAMAGED PAVEMENT TO PROVIDE VERTICAL FACES.
3. CLEAN WITH COMPRESSED AIR.
4. INSPECT FACES TO ENSURE THEY ARE DRY AND CLEAN.

FILLING:

5. TACK COAT ADJOINING FACES.
6. FILL WITH EITHER A SAND ASPHALT OR A FINE-GRADED ASPHALT MIX AND COMPACT USING PROCEDURES AND EQUIPMENT ACCEPTABLE FOR POTHOLE REPAIR.

SYM	DESCRIPTION	DATE	APPR
0	ISSUED FOR BID	8 JUN 15	

NAVFAC

REGISTERED PROFESSIONAL ENGINEER JOHN B. BEAN 19302 OKLAHOMA 08 JUNE 2015

SEAL

leidos

LEIDOS ENGINEERING, LLC
ONE WEST 3RD ST.
TULSA, OK 74103

DELTA AIRPORT CONSULTANTS, INC.
9711 Farrar Court, Suite 100
Richmond, Virginia 23236
phone: (804) 275-8301 • fax: (804) 275-8371
www.deltaairport.com
Delta Project No. 14072

AE INFO

APPROVED

FOR COMMANDER NAVFAC

ACTIVITY

SATISFACTORY TO DATE

DES SMS | DRW MLT | CHK HWM

PM / DM

BRANCH MANAGER

CHIEF ENG / ARCH

FIRE PROTECTION

DEPARTMENT OF THE NAVY
NAVAL FACILITIES ENGINEERING COMMAND
NAVAL FACILITIES ENGINEERING COMMAND SOUTHEAST
NAVAL AIR STATION JACKSONVILLE
CIBL CORE
NAS CORPUS CHRISTI
CORPUS CHRISTI, TEXAS
NAS CORPUS CHRISTI AIRFIELD REPAIRS
TAXIWAY 'E'
CRACK REPAIR DETAILS SHEET 2 OF 3

SCALE: AS NOTED

EPROJECT NO.:

CONSTR. CONTR. NO.

NAVFAC DRAWING NO.
15095218

SHEET 90 OF 145

C-504

DRAWFORM REVISION: 5 APRIL 2012

FILE NAME: P:\FDB\1550-TUL\DIV\205113480D_NAS_CCA_Repair\20_DESIGN\40_CAD\C\134800-03b-C-504.dwg LAYOUT NAME: Layout PLOTTED: Tuesday, June 09, 2015 - 11:59am USER: toberm

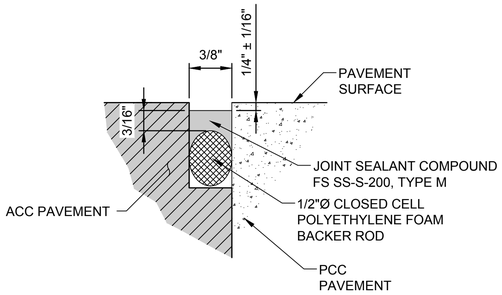

1 JOINT SEALANT - PCC TO ACC JOINT
NOT TO SCALE

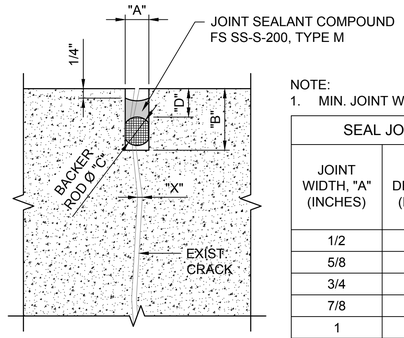

NOTE:
1. MIN. JOINT WIDTH, "A", SHALL BE CRACK WIDTH "X" + 3/8"

SEAL JOINT REQUIREMENTS TABLE

JOINT WIDTH, "A" (INCHES)	JOINT DEPTH, "B" (INCHES)	BACKER ROD DIA., "C" (INCHES)	BACKER ROD PLACEMENT, "D" (INCHES)
1/2	1 3/8	5/8	3/4
5/8	1 5/8	3/4	7/8
3/4	2	1	7/8
7/8	2	1	1
1	2 1/4	1 1/4	1
>1	2 1/4+	1 1/4+	1+

2 TYPICAL DETAIL OF RANDOM CRACK REPAIR
NOT TO SCALE

SYM	DESCRIPTION	DATE	APPR.
0	ISSUED FOR BID	8 JUN 15	

NAVFAC

REGISTERED PROFESSIONAL ENGINEER JOHN B. BEAN 19302 OKLAHOMA 08 JUNE 2015
SEAL

leidos
LEIDOS ENGINEERING, LLC
ONE WEST 3RD ST.
TULSA, OK 74103

DELTA AIRPORT CONSULTANTS, INC.
6711 Farrar Court, Suite 100
Richmond, Virginia 23236
phone: (804) 275-8301 • fax: (804) 275-8371
www.deltaairport.com
Delta Project No. 14072 A/E INFO

APPROVED
FOR COMMANDER NAVFAC
ACTIVITY
SATISFACTORY TO DATE
DES SMS DRW MLT CHK HWM
PM / DM
BRANCH MANAGER
CHIEF ENG / ARCH
FIRE PROTECTION

DEPARTMENT OF THE NAVY
NAVAL FACILITIES ENGINEERING COMMAND
CIBL CORE
NAVAL FACILITIES ENGINEERING COMMAND SOUTHEAST
NAVAL AIR STATION JACKSONVILLE
NAS CORPUS CHRISTI
CORPUS CHRISTI, TEXAS
NAS CORPUS CHRISTI AIRFIELD REPAIRS
TAXIWAY 'E'
CRACK REPAIR DETAILS SHEET 3 OF 3

SCALE: AS NOTED
EPROJECT NO.:
CONSTR. CONTR. NO.
NAVFAC DRAWING NO. 15095219
SHEET 91 OF 145
C-505
DRAWFORM REVISION: 5 APRIL 2012

FILE NAME: P:\FRB\1650-TUL\CIV\205113480 0_NAS_CCA_Repair\20_DESIGN\40_CAD\C\134800-03a-C-505.dwg LAYOUT NAME: Layout PLOTTED: Tuesday, June 09, 2015 - 12:00pm USER: toberm

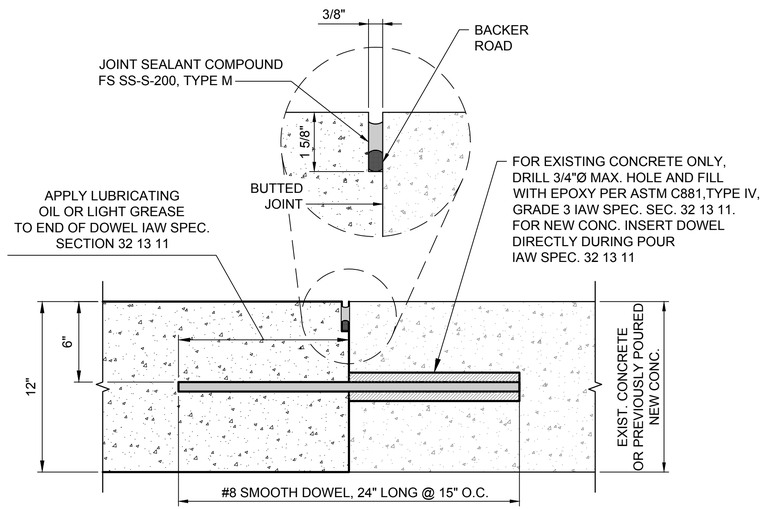

1 CONSTRUCTION JOINT
NOT TO SCALE

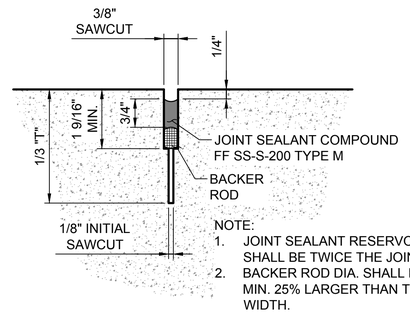

NOTE:
1. JOINT SEALANT RESERVOIR SHALL BE TWICE THE JOINT WIDTH.
2. BACKER ROD DIA. SHALL BE A MIN. 25% LARGER THAN THE JOINT WIDTH.

2 CONTRACTION JOINT
NOT TO SCALE

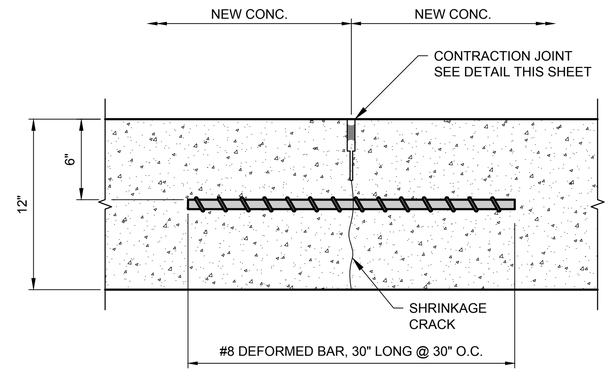

NOTE:
1. BASED ON UFC 3-20-2, FIG. 12-30.

3 CONTRACTION JOINT W/DEFORMED BARS
NOT TO SCALE

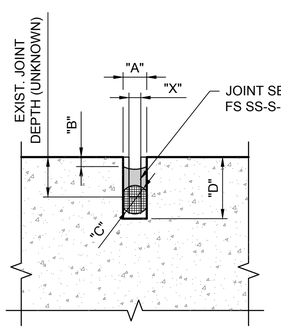

NOTE:
1. MIN. JOINT WIDTH, "A", SHALL BE JOINT WIDTH "X" + 3/8"
2. RESEALING OF JOINTS SHALL BE IAW SPECIFICATION SECTION 32 01 19.61.

REFACED JOINT DIMENSIONS (INCHES)				
REFACED JOINT WIDTH, "A"	3/8	1/2	3/4	1
RECESS BELOW SURFACE, "B"	1/4	1/4	1/4	1/2
THICKNESS OF SEALANT	1/4	1/4	3/8	1/2
BACKER ROD DIAMETER, "C"	1/2	5/8	7/8	1 1/4
TOTAL DEPTH OF JOINT, "D"	1	1 1/8	1 1/2	2 1/4

4 JOINT RESEALING
NOT TO SCALE

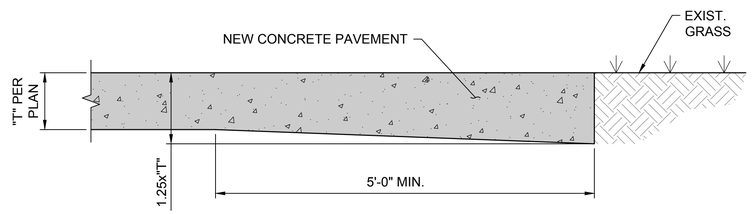

ADJACENT TO UNPAVED AREAS

5 TYPICAL CONCRETE THICKENED EDGE
NOT TO SCALE

NOTE:
1. SMOOTH DOWEL AND DEFORMED BAR SIZE AND SPACING FOR EACH JOINT TYPE BASED ON UFC 3-260-02, TABLE 12-8, DATED JUNE 30, 2001.
2. DOWELS AND TIE BARS IAW UFGS 32 13 11.

SYM	DESCRIPTION	DATE	APPR.
0	ISSUED FOR BID	8 JUN 15	

NAVFAC

REGISTERED PROFESSIONAL ENGINEER JOHN B. BEAN 19302 OKLAHOMA 08 JUNE 2015
SEAL

leidos
LEIDOS ENGINEERING, LLC
ONE WEST 3RD ST.
TULSA, OK 74103

DELTA AIRPORT CONSULTANTS, INC.
6711 Farrar Court, Suite 100
Richmond, Virginia 23236
phone: (804) 275-8301 • fax: (804) 275-8371
www.deltaairport.com
Delta Project No. 14072 A/E INFO

APPROVED
FOR COMMANDER NAVFAC
ACTIVITY
SATISFACTORY TO DATE
DES SMS DRW MLT CHK HWM
PM / DM
BRANCH MANAGER
CHIEF ENG / ARCH
FIRE PROTECTION

DEPARTMENT OF THE NAVY
NAVAL FACILITIES ENGINEERING COMMAND
CIBL CORE
NAVAL FACILITIES ENGINEERING COMMAND SOUTHEAST
NAVAL AIR STATION JACKSONVILLE
NAS CORPUS CHRISTI
CORPUS CHRISTI, TEXAS
NAS CORPUS CHRISTI AIRFIELD REPAIRS
TAXIWAY 'E'
JOINT DETAILS

SCALE: AS NOTED
EPROJECT NO.:
CONSTR. CONTR. NO.
NAVFAC DRAWING NO. 15095220
SHEET 92 OF 145
C-506
DRAWFORM REVISION: 5 APRIL 2012

FILE NAME: P:\FRB\1650-TUL\DIV\2051134800_NAS_CCA_Repair\20_DESIGN\40_CAD\C\134800-03a-C-506.dwg LAYOUT NAME: Layout PLOTTED: Tuesday, June 09, 2015 - 12:00pm USER: tabern

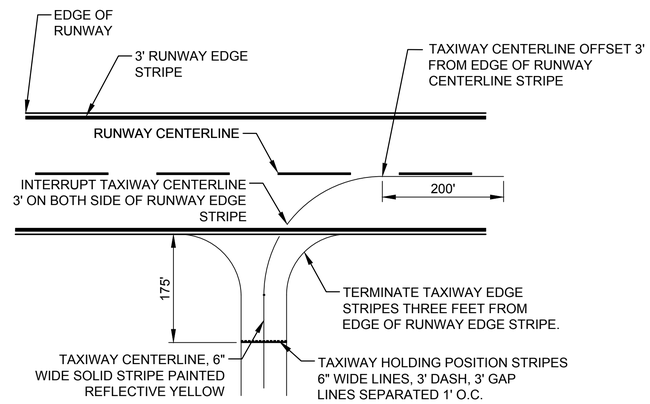

1 **TAXIWAY STRIPING**
NOT TO SCALE

TAXIWAY STRIPING NOTES:

1. TAXIWAY EDGE STRIPE SHALL CONSIST OF TWO 6 INCH WIDE STRIPES PAINTED RETROREFLECTIVE YELLOW. THE STRIPES SHALL BE SPACED SIX INCHES APART AND LOCATED ON THE EDGE OF THE TAXIWAY OR TAXILANE PAVEMENT EDGE.
2. TAXIWAY CENTERLINES SHALL BE OUTLINED IN BLACK PAINT PER DETAIL 1/C508 IF PLACED ON LIGHT COLORED CONCRETE.

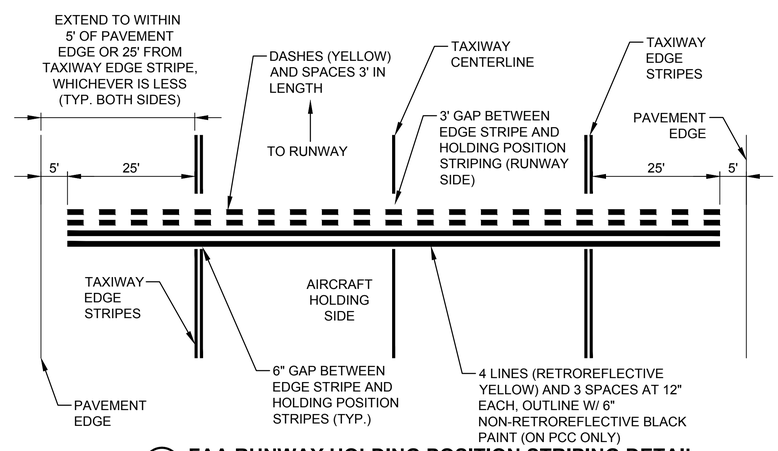

2 **FAA RUNWAY HOLDING POSITION STRIPING DETAIL**
NOT TO SCALE

STM	DESCRIPTION	DATE	APPR
0	ISSUED FOR BID	8 JUN 15	

NAVFAC

REGISTERED PROFESSIONAL ENGINEER JOHN B. BEAN 19302 OKLAHOMA 08 JUNE 2015
SEAL

leidos
LEIDOS ENGINEERING, LLC
ONE WEST 3RD ST.
TULSA, OK 74103

DELTA AIRPORT CONSULTANTS, INC.
6711 Farrar Court, Suite 100
Richmond, Virginia 23236
phone: (804) 275-8301 • fax: (804) 275-8371
www.deltaairport.com
Delta Project No. 14072 A/E INFO

APPROVED
FOR COMMANDER NAVFAC
ACTIVITY
SATISFACTORY TO DATE
DES SMS DRW MLT CHK HWM
PM / DM
BRANCH MANAGER
CHIEF ENG / ARCH
FIRE PROTECTION

DEPARTMENT OF THE NAVY
NAVAL FACILITIES ENGINEERING COMMAND
CIBL CORE
NAVAL FACILITIES ENGINEERING COMMAND SOUTHEAST
NAVAL AIR STATION JACKSONVILLE
NAS CORPUS CHRISTI
CORPUS CHRISTI, TEXAS
NAS CORPUS CHRISTI AIRFIELD REPAIRS
TAXIWAY 'E'
STRIPING DETAILS SHEET 1 OF 3

SCALE: AS NOTED
EPROJECT NO.:
CONSTR. CONTR. NO.
NAVFAC DRAWING NO. 15095221
SHEET 93 OF 145
C-507
DRAWFORM REVISION: 5 APRIL 2012

FILE NAME: P:\FRB\1650-TUL\CIV\205113480_NAS_CCA_Repair\20_DESIGN\40_CAD\C\134800-03a-C-507.dwg LAYOUT NAME: Layout PLOTTED: Tuesday, June 09, 2015 - 12:00pm USER: tabern

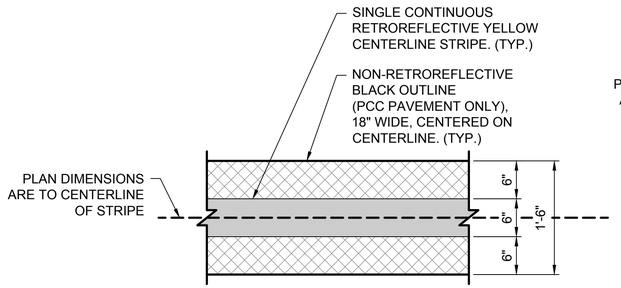

NOTE:
PAINTED STRIPE AS INDICATED ABOVE. BLACK OUTLINE ON PCC PAVEMENT ONLY. BLACK OUTLINE CAN BE OMITTED ON ASPHALT PAVEMENT.

1 TAXIWAY CENTERLINE
NOT TO SCALE

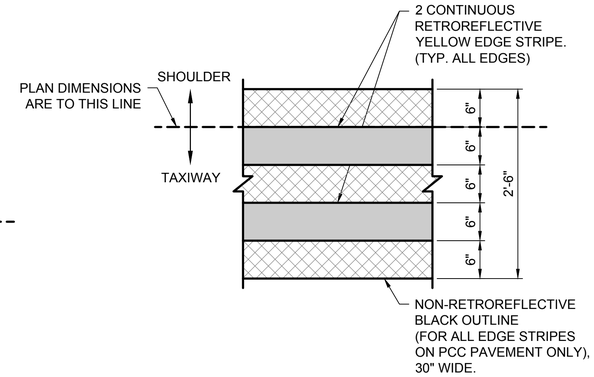

NOTE:
PAINTED STRIPE AS INDICATED ABOVE. BLACK OUTLINE ON PCC PAVEMENT ONLY. BLACK OUTLINE CAN BE OMITTED ON ASPHALT PAVEMENT.

2 TAXIWAY EDGE LINE (CONTINUOUS)
NOT TO SCALE

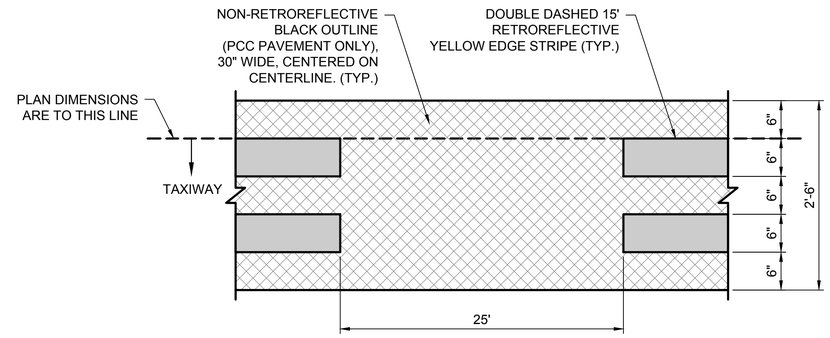

NOTE:
PAINTED STRIPE AS INDICATED ABOVE. BLACK OUTLINE ON PCC PAVEMENT ONLY. BLACK OUTLINE CAN BE OMITTED ON ASPHALT PAVEMENT.

3 TAXILANE EDGE POSITION STRIPING (DASHED)
NOT TO SCALE

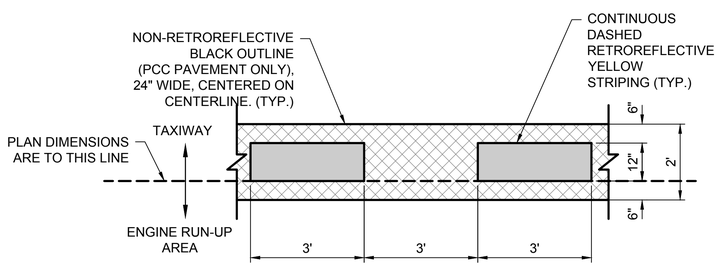

NOTE:
PAINTED STRIPE AS INDICATED ABOVE. BLACK OUTLINE ON PCC PAVEMENT ONLY. BLACK OUTLINE CAN BE OMITTED ON ASPHALT PAVEMENT.

4 INTERMEDIATE HOLDING POSITION STRIPING
NOT TO SCALE

LEGEND

YELLOW RETROREFLECTIVE PAINT

BLACK NON-RETROREFLECTIVE PAINT

STRIPING NOTES

1. THE STRIPING SHALL CONFORM TO FAA AC 150/5340 LATEST EDITION.
2. REFERENCE THE PAINT CHART AND DETAILS FOR RETROREFLECTIVE REQUIREMENTS. VERIFY WITH CONTRACTING OFFICER PRIOR TO PAINTING.
3. PROVIDE 6" WIDE BLACK BORDER AROUND ALL STRIPING ON CONCRETE AND SURFACE PAINTED HOLDING POSITIONS.
4. ALL EXCESS OR LOOSE GLASS BEADS SHALL BE VACUUMED UP. DON'T BLOW OR SWEEP EXCESS BEADS.

PAINT CHART

COLOR	FEDERAL COLOR SPECIFICATION	USE
RETROREFLECTIVE YELLOW	TT-P-1952E TYPE III PAINT, FED-STD-595, CHIP No. 33538, AND TT-B-1325 GLASS BEADS, TYPE III, GRADATION A.	TAXIWAY
RETROREFLECTIVE WHITE	TT-P-1952E TYPE III PAINT, FED-STD-595, CHIP No. 37925, AND TT-B-1325 GLASS BEADS, TYPE III, GRADATION A.	ALL PERMANENT RUNWAY
NON-RETROREFLECTIVE GREEN	TT-P-1952E TYPE III PAINT, FED-STD-595, CHIP No. 34108	INFIELD
NON-RETROREFLECTIVE BLACK	TT-P-1952E TYPE III PAINT, FED-STD-595 CHIP No. 37038.	BORDER ON PCC AND SURFACE PAINTED HOLDING POSITION
THERMOPLASTIC RETROREFLECTIVE RED	TT-P-1952E TYPE III PAINT, FED-STD-595, CHIP No. 31136, AND TT-B-1325 GLASS BEADS, TYPE IV, GRADATION A.	SURFACE PAINTED HOLDING POSITION
THERMOPLASTIC RETROREFLECTIVE WHITE	TT-P-1952E TYPE III PAINT, FED-STD-595, CHIP No. 37925, AND TT-B-1325 GLASS BEADS, TYPE IV, GRADATION A.	SURFACE PAINTED HOLDING POSITION

6 FAA TAXIWAY STRIPING NOTES
NOT TO SCALE

SYM	DESCRIPTION	DATE	APPR
0	ISSUED FOR BID	8 JUN 15	

NAVFAC

REGISTERED PROFESSIONAL ENGINEER JOHN B. BEAN 19302 OKLAHOMA 08 JUNE 2015
SEAL

leidos
LEIDOS ENGINEERING, LLC
ONE WEST 3RD ST.
TULSA, OK 74103

DELTA AIRPORT CONSULTANTS, INC.
6711 Farrar Court, Suite 100
Richmond, Virginia 23236
phone: (804) 275-8301 • fax: (804) 275-8371
www.deltaairport.com
Delta Project No. 14072 A/E INFO

APPROVED
FOR COMMANDER NAVFAC
ACTIVITY
SATISFACTORY TO DATE
DES SMS DRW MLT CHK HWM
PM / DM
BRANCH MANAGER
CHIEF ENG / ARCH
FIRE PROTECTION

DEPARTMENT OF THE NAVY
NAVAL FACILITIES ENGINEERING COMMAND
CIBL CORE
NAVAL FACILITIES ENGINEERING COMMAND SOUTHEAST
NAVAL AIR STATION JACKSONVILLE
NAS CORPUS CHRISTI
CORPUS CHRISTI, TEXAS
NAS CORPUS CHRISTI AIRFIELD REPAIRS
TAXIWAY 'E'
STRIPING DETAILS SHEET 2 OF 3

SCALE: AS NOTED
EPROJECT NO.:
CONSTR. CONTR. NO.
NAVFAC DRAWING NO. 15095222
SHEET 94 OF 145
C-508
DRAWFORM REVISION: 5 APRIL 2012

FILE NAME: P:\FRB\1650-TUL\CIV\205113480_NAS_CCA_Repair\20_DESIGN\40_CAD\C\134800-03a-C-508.dwg LAYOUT NAME: Layout PLOTTED: Tuesday, June 09, 2015 - 12:00pm USER: toberm

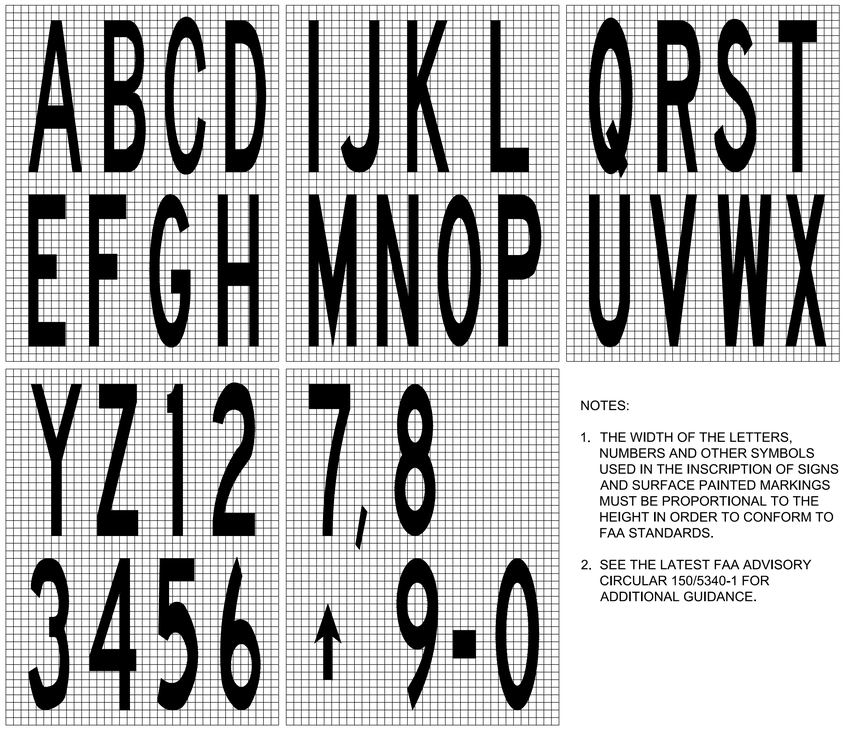

NOTES:

1. THE WIDTH OF THE LETTERS, NUMBERS AND OTHER SYMBOLS USED IN THE INSCRIPTION OF SIGNS AND SURFACE PAINTED MARKINGS MUST BE PROPORTIONAL TO THE HEIGHT IN ORDER TO CONFORM TO FAA STANDARDS.

2. SEE THE LATEST FAA ADVISORY CIRCULAR 150/5340-1 FOR ADDITIONAL GUIDANCE.

1 SURFACE PAINTED MARKINGS DETAIL

NOT TO SCALE

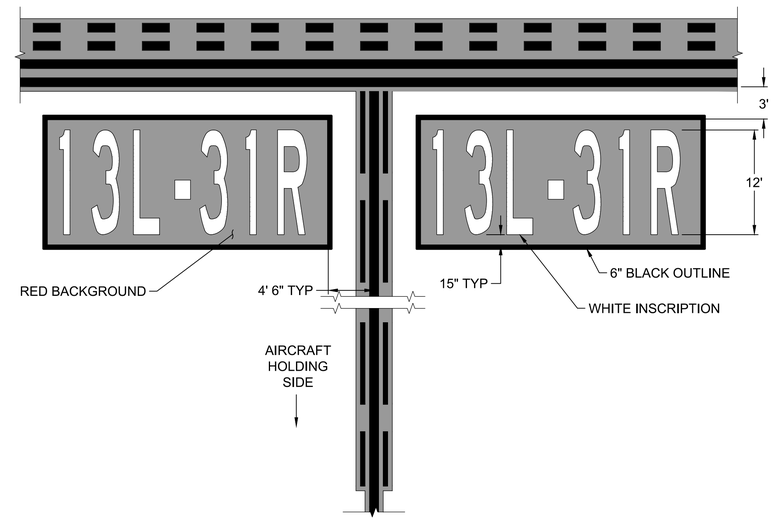

2 SURFACE PAINTED HOLDING POSITION SIGNS

NOT TO SCALE

NOTES:

1. THIS DETAIL APPLIES ONLY TO SITUATIONS WHERE THE TAXIWAY CENTERLINE AND RUNWAY HOLDING POSITION MARKING ARE PERPENDICULAR.

2. SEE "SURFACE PAINTED MARKINGS DETAIL" FOR INSCRIPTION PROPORTIONAL SIZING.

3. THE SURFACE PAINTED HOLDING POSITION SIGN SHALL BE AT LEAST 2 FEET FROM THE TAXIWAY EDGE MARKING OR TAXIWAY EDGE IF NOT MARKED.

4. STENCIL BRACES MUST BE FILLED IN. ALL INDIVIDUAL CHARACTERS MUST BE PAINTED CONTIGUOUS.

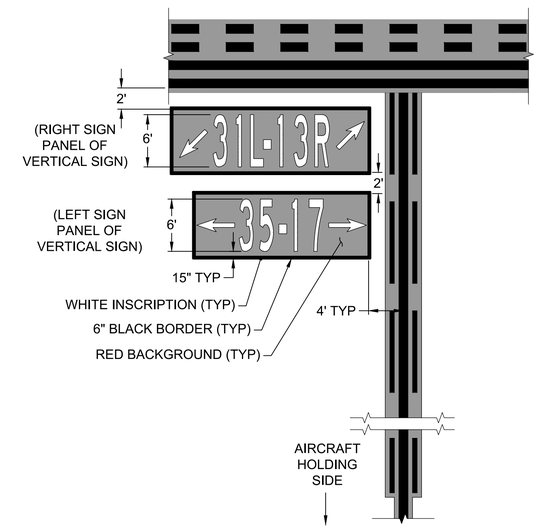

3 SURFACE PAINTED HOLDING POSITION SIGNS - STACKED

NOT TO SCALE

NOTES:

1. THIS DETAIL APPLIES ONLY TO SITUATIONS WHERE THE TAXIWAY CENTERLINE AND RUNWAY HOLDING POSITION MARKING ARE PERPENDICULAR.

2. SEE "SURFACE PAINTED MARKINGS DETAIL" FOR INSCRIPTION PROPORTIONAL SIZING.

3. THE SURFACE PAINTED HOLDING POSITION SIGN SHALL BE AT LEAST 2 FEET FROM THE TAXIWAY EDGE MARKING OR TAXIWAY EDGE IF NOT MARKED.

4. STENCIL BRACES MUST BE FILLED IN. ALL INDIVIDUAL CHARACTERS MUST BE PAINTED CONTIGUOUS.

SYM	DESCRIPTION	DATE	APPR
0	ISSUED FOR BID	8 JUN 15	

NAVFAC

REGISTERED PROFESSIONAL ENGINEER JOHN B. BEAN 19302 OKLAHOMA 08 JUNE 2015 SEAL

leidos
LEIDOS ENGINEERING, LLC
ONE WEST 3RD ST.
TULSA, OK 74103

DELTA AIRPORT CONSULTANTS, INC.
6711 Farrar Court, Suite 100
Richmond, Virginia 23236
phone: (804) 275-8301 • fax: (804) 275-8371
www.deltaairport.com
Delta Project No. 14072 A/E INFO

APPROVED
FOR COMMANDER NAVFAC
ACTIVITY
SATISFACTORY TO DATE
DES SMS DRW MLT CHK HWM
PM / DM
BRANCH MANAGER
CHIEF ENG / ARCH
FIRE PROTECTION

DEPARTMENT OF THE NAVY
NAVAL FACILITIES ENGINEERING COMMAND
CIBL CORE
NAVAL FACILITIES ENGINEERING COMMAND SOUTHEAST
NAS CORPUS CHRISTI
NAVAL AIR STATION JACKSONVILLE
CORPUS CHRISTI, TEXAS
NAS CORPUS CHRISTI AIRFIELD REPAIRS
TAXIWAY 'E'
STRIPING DETAILS SHEET 3 OF 3

SCALE: AS NOTED
EPROJECT NO.:
CONSTR. CONTR. NO.
NAVFAC DRAWING NO.
15095223
SHEET 95 OF 145
C-509
DRAWFORM REVISION: 5 APRIL 2012

FILE NAME: P:\FDB\1650-TUL\CIV\2051134800_NAS_CCA_Repair\20_DESIGN\40_CAD\C\134800-03b-C-509.dwg LAYOUT NAME: Layout PLOTTED: Tuesday, June 09, 2015 - 12:00pm USER: toberm

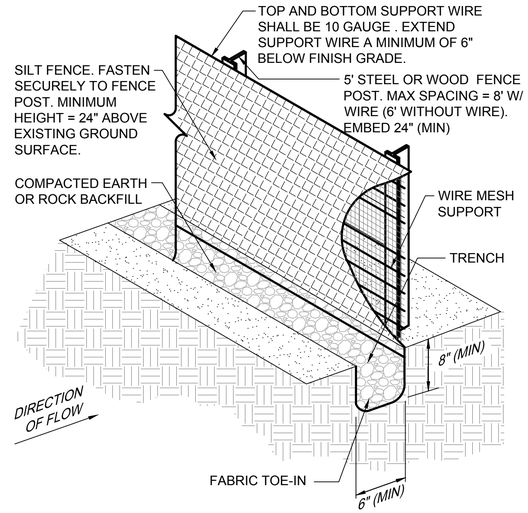

STANDARD SYMBOL

SF

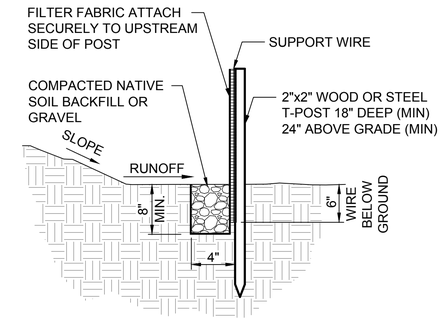

CROSS SECTION

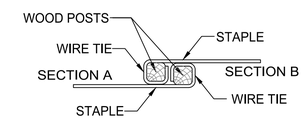

TOP VIEW
JOINING TWO ADJACENT SILT FENCE SECTIONS

1 SEDIMENT FENCE (SILT FENCE) INSTALLATION DETAIL

NOT TO SCALE

BEST MANAGEMENT PRACTICES (BMP'S)

POLLUTION THROUGH STORM RUNOFF IS INTENSIFIED AT CONSTRUCTION SITES DUE TO THE REMOVAL OF THE NATURAL GROUND COVER OF THE SITE AS WELL AS THE INTRODUCTION OF HAZARDOUS CHEMICALS AND WASTES TO THE AREA. MEASURES ARE REQUIRED BOTH DURING CONSTRUCTION AND AFTER THE COMPLETION OF CONSTRUCTION TO STABILIZE THE SITE. STABILIZATION OF THE SITE DURING CONSTRUCTION ACTIVITIES CONSISTS OF THE INSTALLATION OF TEMPORARY OR PERMANENT MEASURES TO PREVENT EROSION OR TO INTERCEPT SEDIMENT PRIOR TO IT LEAVING THE SITE. THIS CAN BE ACCOMPLISHED THROUGH THE USE OF GROUND COVER MULCHING, PAVING, SILT FENCES, AND SEDIMENT BASINS ALONG WITH CONSTRUCTION METHODS TO REDUCE THE DISTURBED AREAS OF CONSTRUCTION.

CONSTRUCTION SPECIFICATIONS

1. FENCE POSTS SHALL BE A MINIMUM OF 5'-0" LONG DRIVEN 24" MINIMUM INTO THE GROUND. STEEL POSTS WILL BE STANDARD T OR U SECTION WEIGHING NOT LESS THAN 1.00 POUND PER LINEAR FOOT.

2. GEOTEXTILE SHALL BE FASTENED SECURELY TO EACH FENCE POST WITH WIRE TIES AT TOP AND MID-SECTION AND SHALL MEET THE DEFINED FILTER FABRIC SPECIFICATIONS.

3. WHERE ENDS OF GEOTEXTILE FABRIC COME TOGETHER, THEY SHALL BE OVERLAPPED, FOLDED AND WIRE TIED TO PREVENT SEDIMENT BYPASS.

4. SILT FENCE SHALL BE INSPECTED AFTER EACH RAINFALL EVENT AND MAINTAINED WHEN BULGES OCCUR OR WHEN SEDIMENT ACCUMULATION REACHED 50% OF THE FABRIC HEIGHT.

MANNER OF CONSTRUCTION

1. PLACE THE BOTTOM 1FT OF FABRIC IN 8-INCH DEEP TRENCH LAPPING TOWARD THE UPSLOPE SIDE.

MANNER OF CONSTRUCTION (CONT.)

2. BACKFILL WITH COMPACTED EARTH OR GRAVEL AS SHOWN. TO REDUCE MAINTENANCE, EXCAVATE A SHALLOW SEDIMENT STORAGE AREA ON UP SLOPE SIDE OF FENCE WHERE SEDIMENTATION IS EXPECTED.

3. PROVIDE GOOD ACCESS TO DEPOSITION AREAS FOR CLEAN-OUT AND MAINTENANCE.

4. DO NOT INSTALL SEDIMENT FENCE ACROSS INTERMITTENT OR PERMANENT STREAMS, CHANNELS, OR ANY LOCATION WHERE CONCENTRATED FLOW IS ANTICIPATED.

INSPECTIONS

INSPECTIONS SHALL BE PERFORMED EVERY SEVEN (7) DAYS OR AFTER A RAINFALL EVENT OF 0.5 INCHES OR GREATER

MAJOR ITEMS TO BE OBSERVED DURING INSPECTIONS INCLUDE:

LOCATION OF DISCHARGES OF SEDIMENT OR OTHER POLLUTANTS

LOCATION OF BEST MANAGEMENT PRACTICES (BMP'S) THAT ARE IN NEED OF MAINTENANCE

LOCATION OF BMP'S WHICH ARE NOT PERFORMING, FAILED TO OPERATE, OR WERE INADEQUATE

LOCATIONS WHERE ADDITIONAL BMP'S ARE NEEDED.

FILTER FABRIC SPECIFICATIONS

SILT FENCE SHALL BE CONSTRUCTED OF A WOVEN, POLYPROPYLENE, POLYESTER OR POLYMIDE MATERIAL THAT SHALL BE RESISTENT TO ULTRA- VIOLET DEGRADATION AND ROT. THE EDGES OF THE WOVEN FABRIC SHALL BE SEALED OR SELVAGED TO PREVENT RAVELING. THE FABRIC SHALL EXHIBIT THE FOLLOWING PHYSICAL PROPERTIES WHEN SAMPLED AND TESTED USING THE SPECIFIED METHODS.

PROPERTY	TEST METHODS	VALUES
GRAB TENSILE	ASTM D-4632	100 LB. (MIN.)
ELONGATION @ YIELD	ASTM D-4632	10-40% (MAX.)
TRAPEZOID TEAR	ASTM D-4533	50 LB. (MIN.)
UV RESISTANCE	ASTM D-4355	80% (MIN.)
APPARENT OPENING SIZE	ASTM D-4751	20-50 US SIEVE
PERMITIVITY 1/SEC	ASTM D-4491	0.1 (MIN.)

PREFABRICATED FENCE SYSTEMS MAY BE USED PROVIDED THEY MEET ALL THE MATERIAL REQUIREMENTS.

EROSION CONTROL MEASURES SHALL REMAIN UNTIL A STAND OF VEGETATIVE GROUND COVER OF 70% OR GREATER COVERAGE IS ESTABLISHED.

SYM	DESCRIPTION	DATE	APPR.
0	ISSUED FOR BID	8 JUN 15	

NAVFAC

REGISTERED PROFESSIONAL ENGINEER JOHN B. BEAN 19302 OKLAHOMA 08 JUNE 2015

SEAL

leidos
LEIDOS ENGINEERING, LLC
ONE WEST 3RD ST.
TULSA, OK 74103

DELTA AIRPORT CONSULTANTS, INC.
6711 Farrar Court, Suite 100
Richmond, Virginia 23236
phone: (804) 275-8301 • fax: (804) 275-8371
www.deltaairport.com

Delta Project No. 14072 A/E INFO

APPROVED

FOR COMMANDER NAVFAC

ACTIVITY

SATISFACTORY TO DATE

DES SMS DRW MLT CHK HWM

PM / DM

BRANCH MANAGER

CHIEF ENG / ARCH

FIRE PROTECTION

DEPARTMENT OF THE NAVY
NAVAL FACILITIES ENGINEERING COMMAND
CIBL CORE
NAVAL FACILITIES ENGINEERING COMMAND SOUTHEAST
NAVAL AIR STATION JACKSONVILLE

NAS CORPUS CHRISTI
CORPUS CHRISTI, TEXAS

NAS CORPUS CHRISTI AIRFIELD REPAIRS
TAXIWAY 'E'

EROSION CONTROL DETAILS SHEET 1 OF 2

SCALE: AS NOTED

EPROJECT NO.:

CONSTR. CONTR. NO.

NAVFAC DRAWING NO.
15095224

SHEET 96 OF 145

C-701

DRAWFORM REVISION: 5 APRIL 2012

FILE NAME: P:\FRB\1650-TUL\CIV\205113480_NAS_CCA_Repair\20_DESIGN\40_CAD\C\134800-03a-C-701.dwg LAYOUT NAME: Layout PLOTTED: Tuesday, June 09, 2015 - 12:00pm USER: tobermn

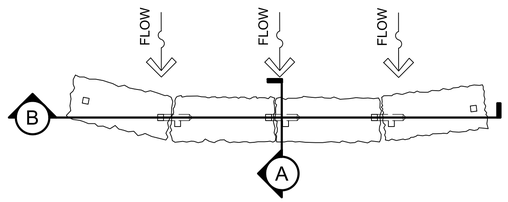

PLAN VIEW

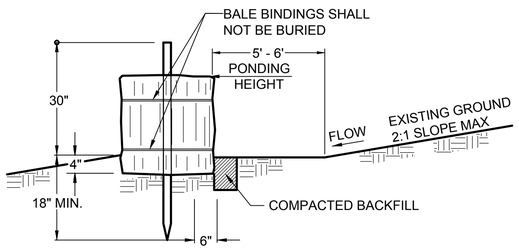

SECTION A

STRAW BALE BARRIER INSTALLATION DETAIL

1 NOT TO SCALE

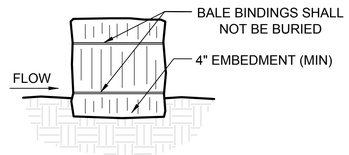

BEDDING DETAIL

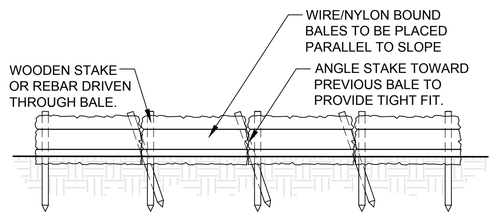

SECTION B

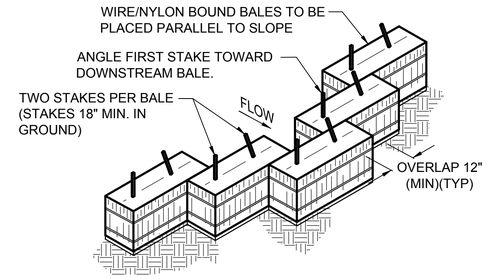

SHALLOW OVERLAND FLOW

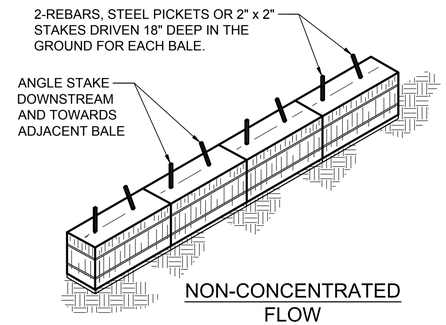

NON-CONCENTRATED FLOW

STRAW BALE DIKE INSTALLATION NOTES:

1. BALES SHALL BE PLACED IN A ROW WITH ENDS TIGHTLY ABUTTING THE ADJACENT BALES.
2. EACH BALE SHALL BE EMBEDDED IN THE SOIL A MINIMUM OF 4 INCHES.
3. BALES SHALL BE SECURELY ANCHORED IN PLACE BY STAKES OR REBARS DRIVEN THROUGH THE BALES. THE FIRST STAKE IN EACH BALE SHALL BE ANGLED TOWARD PREVIOUSLY LAID BALE TO FORCE BALES TOGETHER.
4. INSPECTION SHALL BE FREQUENT AND REPAIR OR REPLACEMENT SHALL BE MADE PROMPTLY AS NEEDED.
5. BALES SHALL BE REMOVED BY THE CONTRACTOR WHEN THEY HAVE SERVED THEIR USEFULLNESS SO AS NOT TO BLOCK OR IMPEDE STORM FLOW OR DRAINAGE.
6. STRAW BALE DIKE MUST BE INSTALLED AT EXISTING LEVEL GRADE. BOTH ENDS OF EACH BALE DIKE SECTION MUST BE EXTENDED AT LEAST 8 FEET UPSLOPE AT 45 DEGREES TO THE MAIN DIKE ALIGNMENT.
7. SEDIMENT MUST BE REMOVED WHERE ACCUMULATIONS REACH 1/2 THE ABOVE GROUND HEIGHT OF THE BALE.
8. ANY SECTION OF THE BALE DIKE WHICH HAS BEEN UNDERMINED OR TOPPED MUST BE IMMEDIATELY REPLACED.

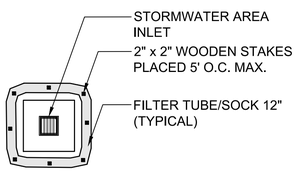

PLAN

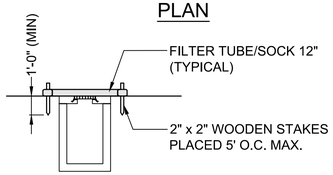

SECTION

NOTES:

1. ALL MATERIAL TO MEET FILTER TUBE/SOCK MANUFACTURERS SPECIFICATIONS.
2. CHECK DAM SHOULD BE USED IN AREAS THAT DRAIN 10 ACRES OR LESS.
3. CHECK DAM CAN BE DIRECT SEEDED AT THE TIME OF INSTALLATION.
4. MAY TAKE THE PLACE OF STANDARD INLET PROTECTION AT THE DISCRETION OF THE CONTRACTOR WITH THE APPROVAL FROM THE ENGINEER.

FILTER TUBE/SOCK RUNOFF INLET PROTECTION DETAIL

2 NOT TO SCALE

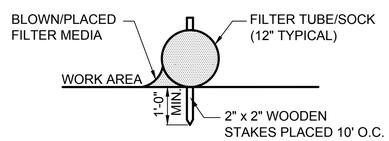

CROSS SECTION

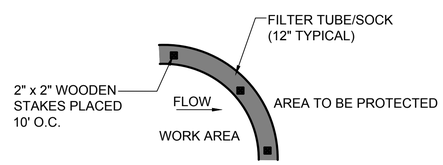

PLAN VIEW

NOTES:

1. ALL MATERIAL TO MEET FILTER TUBE/SOCK MANUFACTURERS SPECIFICATIONS.
2. COMPOST MATERIAL TO BE DISPERSED ON SITE, AS DETERMINED BY THE ENGINEER.
3. MAY TAKE THE PLACE OF SILT FENCE AT THE DISCRETION OF THE CONTRACTOR WITH THE APPROVAL FROM THE ENGINEER.
4. WHERE FILTER TUBES/SOCKS ARE LOCATED ON PAVED AREAS, SECURE FILTER TUBE/SOCK PLACEMENT WITH SAND BAGS.

FILTER TUBE/SOCK SEDIMENT CONTROL INSTALLATION DETAIL

3 NOT TO SCALE

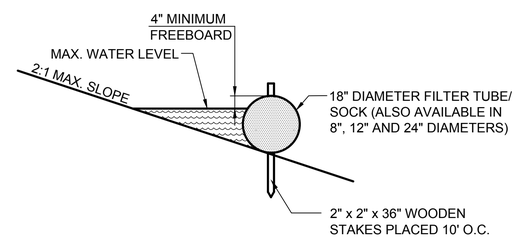

SINGLE INSTALLATION SECTION

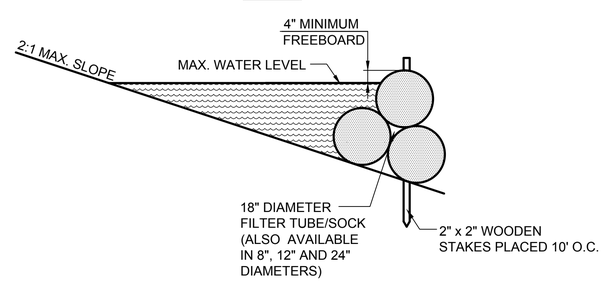

PYRAMID INSTALLATION SECTION

FILTER TUBE/SOCK CHECK DAM SECTION DETAIL

4 NOT TO SCALE

SYM	DESCRIPTION	DATE	APPR
0	ISSUED FOR BID	8 JUN 15	

NAVFAC

REGISTERED PROFESSIONAL ENGINEER JOHN B. BEAN 19302 OKLAHOMA 08 JUNE 2015

SEAL

leidos

LEIDOS ENGINEERING, LLC
ONE WEST 3RD ST.
TULSA, OK 74103

DELTA AIRPORT CONSULTANTS, INC.
6711 Farrar Court, Suite 100
Richmond, Virginia 23236
phone: (804) 275-8301 • fax: (804) 275-8371
www.deltaairport.com
Delta Project No. 14072 A/E INFO

APPROVED

FOR COMMANDER NAVFAC

ACTIVITY

SATISFACTORY TO DATE

DES SMS DRW MLT CHK HWM

PM / DM

BRANCH MANAGER

CHIEF ENG / ARCH

FIRE PROTECTION

DEPARTMENT OF THE NAVY
NAVAL FACILITIES ENGINEERING COMMAND
CIBL CORE
NAVAL FACILITIES ENGINEERING COMMAND SOUTHEAST
NAVAL AIR STATION JACKSONVILLE
NAS CORPUS CHRISTI
CORPUS CHRISTI, TEXAS
NAS CORPUS CHRISTI AIRFIELD REPAIRS
TAXIWAY 'E'
EROSION CONTROL DETAILS SHEET 2 OF 2

SCALE: AS NOTED

EPROJECT NO.:

CONSTR. CONTR. NO.

NAVFAC DRAWING NO.
15095225

SHEET 97 OF 145

C-702

DRAWFORM REVISION: 5 APRIL 2012

FILE NAME: P:\FPB\1650-TUL\CIV\205113480O_NAS_CCA_Repair\20_DESIGN\40_CAD\C\134800-03a-C-702.dwg LAYOUT NAME: Layout PLOTTED: Tuesday, June 09, 2015 - 12:00pm USER: toberm

INSTALL REIL SYSTEM EQUIPMENT ON EXISTING FOUNDATION

INSTALL REIL SYSTEM EQUIPMENT ON EXISTING FOUNDATION

TAXIWAY C

WC

INSTALL WIND CONE

INSTALL PAPI-4 SYSTEM

PAPI-4

PAPI-4

INSTALL PAPI-4 SYSTEM

INSTALL POWER & CONTROL SYSTEM IN EXISTING AIRFIELD LIGHTING VAULT BLDG 1241

APPROACH LIGHT CONDUITS

RUNWAY 04-22

TAXIWAY B

TAXIWAY E (EAST)

APPROACH LIGHT CONDUITS

TAXIWAY Y

TAXIWAY Y

WC

INSTALL WIND CONE

RUNWAY 17-35

TAXIWAY A

RUNWAY 31R-13L

RUNWAY 04-22

STUB-OUT 6W-2" DUCT BANK TO PAR SITE

PAR

TAXIWAY E (MIDFIELD)

FUTURE CONDUITS (BY OTHERS)

FUTURE CONDUIT (BY OTHERS)

RUNWAY 31L-13R

LOCATE PULLCAN PLAZA FOR FUTURE ACCESS TO PAR SITE

WC

INSTALL WIND CONE

TAXIWAY Z

WC

PAPI-4

INSTALL WIND CONE

INSTALL PAPI-4 SYSTEM

PAPI-4

INSTALL WIND CONE

INSTALL PAPI-4 SYSTEM

TAXIWAY E (WEST)

INSTALL REIL SYSTEM EQUIPMENT ON EXISTING FOUNDATION

INSTALL REIL SYSTEM EQUIPMENT ON EXISTING FOUNDATION

ELECTRICAL SYMBOL LEGEND

SYMBOL STATUS

EXISTING	REMOVE	INSTALL	RELOCATE	ADJUST
			R	A

LEGEND

- EXISTING L-867 ELECTRICAL PULLCAN PLAZA (# INDICATES NUMBER OF CANS)
- L-867 ELECTRICAL PULLCAN PLAZA (# INDICATES NUMBER OF CANS)
- L-849 REIL (UNI-DIRECTIONAL) EQUIPMENT
- WIND CONE
- 4 BOX PAPI
- DUCT BANK BORED UNDER PAVEMENT
- DUCT BANK
- FUTURE DUCT BANK

300 0 300 600

SCALE: 1"=300' FEET

SYM	DESCRIPTION	DATE	APPR
0	ISSUED FOR BID	8 JUN 15	

NAVFAC

STATE OF TEXAS
JON M. McCALMONT
100633
LICENSED PROFESSIONAL ENGINEER
8 JUN 15
SEAL

leidos
LEIDOS ENGINEERING, LLC
ONE WEST 3RD ST.
TULSA, OK 74103

DELTA AIRPORT CONSULTANTS, INC.
9711 Farror Court, Suite 100
Richmond, Virginia 23236
phone: (804) 275-8301 • fax: (804) 275-8371
www.deltaairport.com

Delta Project No. 14072 A/E INFO

APPROVED

FOR COMMANDER NAVFAC

ACTIVITY

SATISFACTORY TO DATE

DES EFC DRW MRM CHK MWK

PROJECT MANAGER

IPT TECH. BRANCH HEAD

CHIEF ENG/ARCH (CORE)

DEPARTMENT OF THE NAVY
NAVAL FACILITIES ENGINEERING COMMAND
CIBL CORE

NAVAL FACILITIES ENGINEERING COMMAND SOUTHEAST
NAVAL AIR STATION JACKSONVILLE

NAS CORPUS CHRISTI

CORPUS CHRISTI, TEXAS
NAS CORPUS CHRISTI AIRFIELD REPAIRS
TAXIWAY 'E'

HOMERUN AND NAVAIDS PLAN

SCALE 1"=300'

EPROJECT NO.:

CONSTR. CONTR. NO.

NAVFAC DRAWING NO.
15095226

SHEET 98 OF 145

ES101

DRAWFORM REVISION: 5 APRIL 2012

FILE NAME: N:\14072\04 CAD_REPAIR_TWYE\1302443-E-ES101.dwg LAYOUT NAME: ES101 PLOTTED: Tuesday, June 09, 2015 - 10:02am USER: mrm

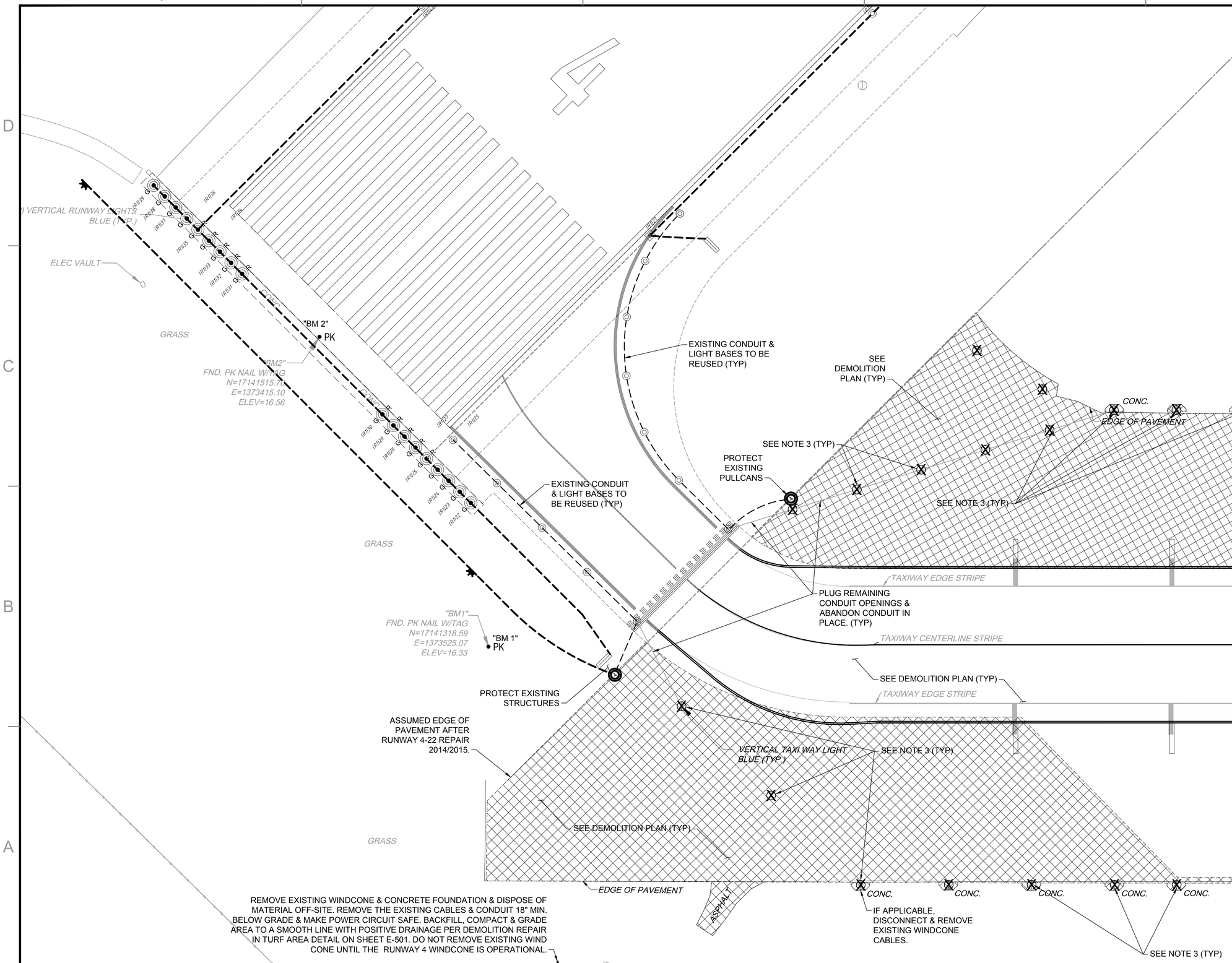

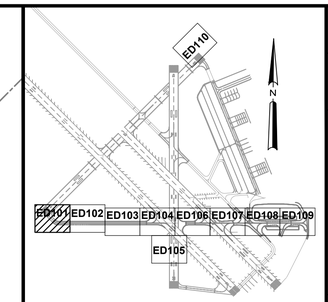

KEY MAP

ELECTRICAL SYMBOL LEGEND

SYMBOL STATUS

EXISTING	REMOVE	INSTALL	REPLACE	ADJUST
	X		R	A

SYMBOL	DESCRIPTION
	L-858 AIRFIELD GUIDANCE SIGN
	L-861T BASE MOUNTED MITL
	L-849 REIL (UNI-DIRECTIONAL)
	CONDUIT & CABLE
	EXISTING DUCT BANK
	DUCT BANK - BORED UNDER PAVEMENT
	DEMOLITION OF EXISTING ACC & PCC

NOTES

1. CONTRACTOR SHALL PRESERVE AND PROTECT ALL CABLES AND FIXTURES NOT IDENTIFIED TO BE REMOVED.
2. THE EXISTING GROUNDING POINTS & CONCRETE ENCASEMENT SHALL BE COMPLETELY REMOVED TO A DEPTH OF 6" MINIMUM & PATCHED WITH BITUMINOUS SURFACE COURSE IN 2" MAX. COMPACTED LIFTS. PRIOR TO BACKFILLING WITH ASPHALT, CORE THE EXISTING PAVEMENT FULL DEPTH TO PROVIDE A NEAT VERTICAL FACE ON ALL SIDES. PRIOR TO BACKFILLING, APPLY A BITUMINOUS PRIME COAT ON ALL PAVEMENT SURFACE AT A RATE OF ~0.15 GALLONS PER SQ.YD.
3. REMOVE EXISTING WIRE, FIXTURE AND FOUNDATION. PLUG CONDUIT OPENINGS, ABANDON CONDUIT, AND BACKFILL PER DEMOLITION REPAIR IN-SHOULDER PAVEMENT & TURF AREA DETAIL ON SHEET E-503.
4. NOT ALL DEMOLITION ITEMS THAT NEED TO BE REMOVED FOR THE ELECTRICAL WORKS ARE SHOWN. THE CONTRACTOR SHALL REVIEW THE ELECTRICAL LAYOUT SHEETS TO DETERMINE THE EXTENT OF DEMOLITION NEEDED. THE FINAL DETERMINATION OF THE AMOUNT OF DEMOLITION SHALL MADE BY THE CONTRACTOR OFFICER.

30 0 30 60
SCALE: 1"=30' FEET

SYM	DESCRIPTION	DATE	APPR
0	ISSUED FOR BID	8 JUN 15	

NAVFAC

STATE OF TEXAS
JON M. McCALMONT
100633
LICENSED PROFESSIONAL ENGINEER
8 JUN 15
SEAL

leidos
LEIDOS ENGINEERING, LLC
ONE WEST 3RD ST.
TULSA, OK 74103

DELTA AIRPORT CONSULTANTS, INC.
9711 Forror Court, Suite 100
Richmond, Virginia 23236
phone: (804) 275-8301 • fax: (804) 275-8371
www.deltaairport.com
Delta Project No. 14072 A/E INFO

APPROVED
FOR COMMANDER NAVFAC
ACTIVITY
SATISFACTORY TO DATE
DES EFC DRW MRM CHK MWK
PROJECT MANAGER
IPT TECH. BRANCH HEAD
CHIEF ENG/ARCH (CORE)

DEPARTMENT OF THE NAVY
NAVAL FACILITIES ENGINEERING COMMAND
NAVAL FACILITIES ENGINEERING COMMAND SOUTHEAST
NAVAL AIR STATION JACKSONVILLE
CBLL CORE
NAS CORPUS CHRISTI
CORPUS CHRISTI, TEXAS
NAS CORPUS CHRISTI AIRFIELD REPAIRS
TAXIWAY 'E'
ELECTRICAL DEMOLITION PLAN

SCALE: 1"=30'
EPROJECT NO.:
CONSTR. CONTR. NO.
NAVFAC DRAWING NO.
15095227
SHEET 99 OF 145
ED101

DRAWFORM REVISION: 5 APRIL 2012

FILE NAME: N:\14072\04 CAD_REPAIR_TWYE\1302443-E-ED101.dwg LAYOUT NAME: ED101 PLOTTED: Tuesday, June 09, 2015 - 10:02am USER: mrm

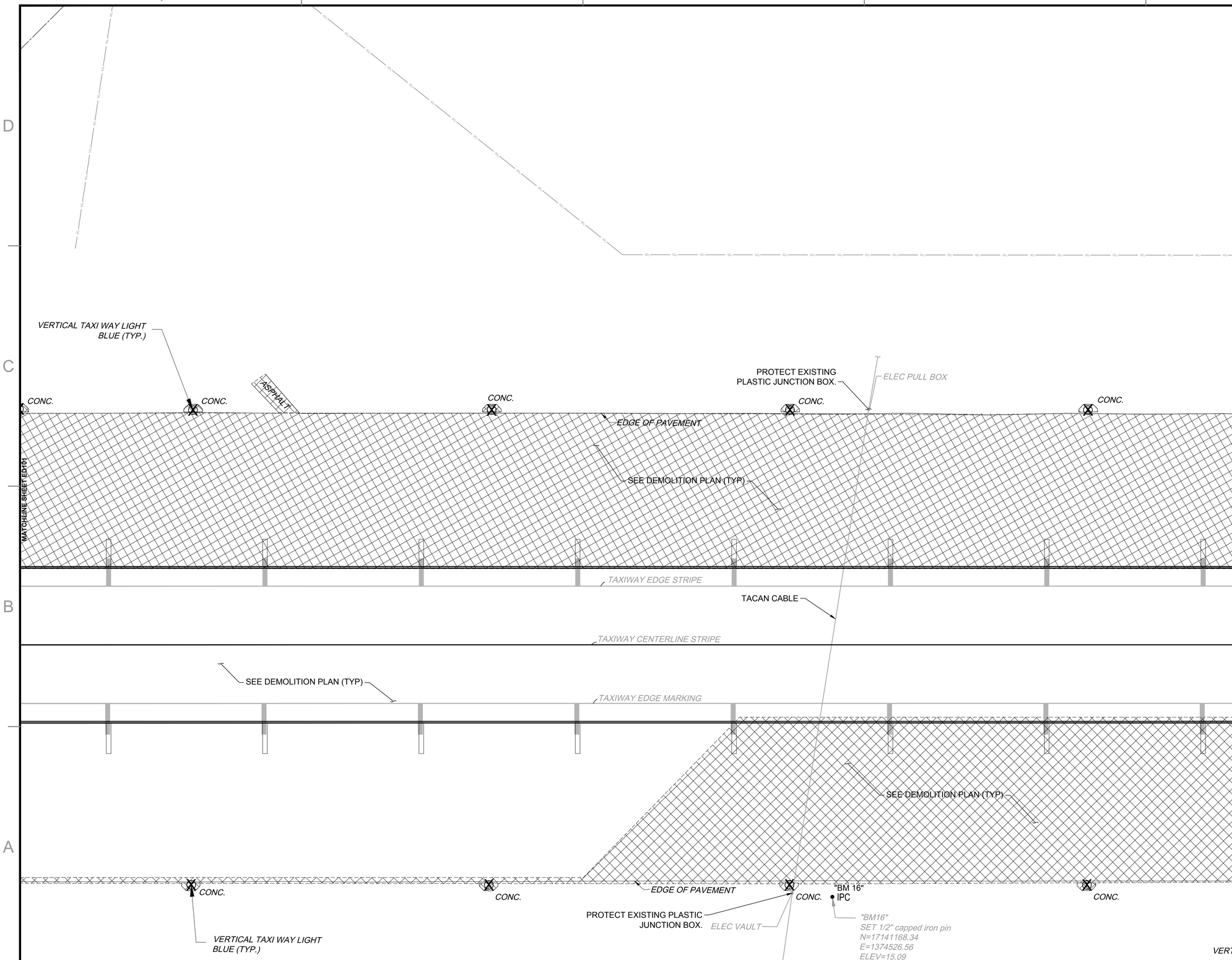

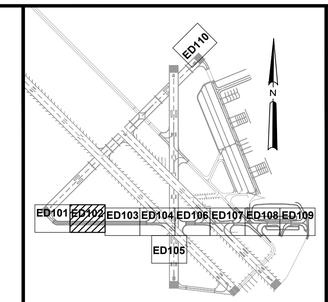

KEY MAP

ELECTRICAL SYMBOL LEGEND

SYMBOL STATUS

EXISTING	REMOVE	INSTALL	REPLACE	ADJUST
	X		R	A

SYMBOL	DESCRIPTION
	L-858 AIRFIELD GUIDANCE SIGN
	L-861T BASE MOUNTED MITL
	L-849 REIL (UNI-DIRECTIONAL)
	CONDUIT & CABLE
	EXISTING DUCT BANK
	DUCT BANK - BORED UNDER PAVEMENT
	DEMOLITION OF EXISTING ACC & PCC

NOTES

1. CONTRACTOR SHALL PRESERVE AND PROTECT ALL CABLES AND FIXTURES NOT IDENTIFIED TO BE REMOVED.
2. THE EXISTING GROUNDING POINTS & CONCRETE ENCASEMENT SHALL BE COMPLETELY REMOVED TO A DEPTH OF 6" MINIMUM & PATCHED WITH BITUMINOUS SURFACE COURSE IN 2" MAX. COMPACTED LIFTS. PRIOR TO BACKFILLING WITH ASPHALT, CORE THE EXISTING PAVEMENT FULL DEPTH TO PROVIDE A NEAT VERTICAL FACE ON ALL SIDES. PRIOR TO BACKFILLING, APPLY A BITUMINOUS PRIME COAT ON ALL PAVEMENT SURFACE AT A RATE OF ~0.15 GALLONS PER SQ.YD.
3. REMOVE EXISTING WIRE, FIXTURE AND FOUNDATION. PLUG CONDUIT OPENINGS, ABANDON CONDUIT, AND BACKFILL PER DEMOLITION REPAIR IN-SHOULDER PAVEMENT & TURF AREA DETAIL ON SHEET E-503.
4. NOT ALL DEMOLITION ITEMS THAT NEED TO BE REMOVED FOR THE ELECTRICAL WORKS ARE SHOWN. THE CONTRACTOR SHALL REVIEW THE ELECTRICAL LAYOUT SHEETS TO DETERMINE THE EXTENT OF DEMOLITION NEEDED. THE FINAL DETERMINATION OF THE AMOUNT OF DEMOLITION SHALL MADE BY THE CONTRACTOR OFFICER.

30 0 30 60
SCALE: 1"=30' FEET

SYM	DESCRIPTION	DATE	APPR
0	ISSUED FOR BID	8 JUN 15	

NAVFAC

STATE OF TEXAS
JON M. McCALMONT
100633
LICENSED PROFESSIONAL ENGINEER
8 JUN 15
SEAL

leidos
LEIDOS ENGINEERING, LLC
ONE WEST 3RD ST.
TULSA, OK 74103

DELTA AIRPORT CONSULTANTS, INC.
9711 Forrer Court, Suite 100
Richmond, Virginia 23236
phone: (804) 275-8301 • fax: (804) 275-8371
www.deltaairport.com
Delta Project No. 14072 A/E INFO

APPROVED
FOR COMMANDER NAVFAC
ACTIVITY
SATISFACTORY TO DATE
DES EFC DRW MRM CHK MWK
PROJECT MANAGER
IPT TECH. BRANCH HEAD
CHIEF ENG/ARCH (CORE)

DEPARTMENT OF THE NAVY
NAVAL FACILITIES ENGINEERING COMMAND
CBL CORE
NAVAL FACILITIES ENGINEERING COMMAND SOUTHEAST
NAVAL AIR STATION JACKSONVILLE
NAS CORPUS CHRISTI
CORPUS CHRISTI, TEXAS
NAS CORPUS CHRISTI AIRFIELD REPAIRS
TAXIWAY 'E'
ELECTRICAL DEMOLITION PLAN

SCALE: 1"=30'
EPROJECT NO.:
CONSTR. CONTR. NO.
NAVFAC DRAWING NO.
15095228
SHEET 100 OF 145
ED102

DRAWFORM REVISION: 5 APRIL 2012

FILE NAME: N:\14072\04 CAD_REPAIR_TWYE\132443-E-ED102.dwg LAYOUT NAME: ED102 PLOTTED: Tuesday, June 09, 2015 - 10:02am USER: mrm

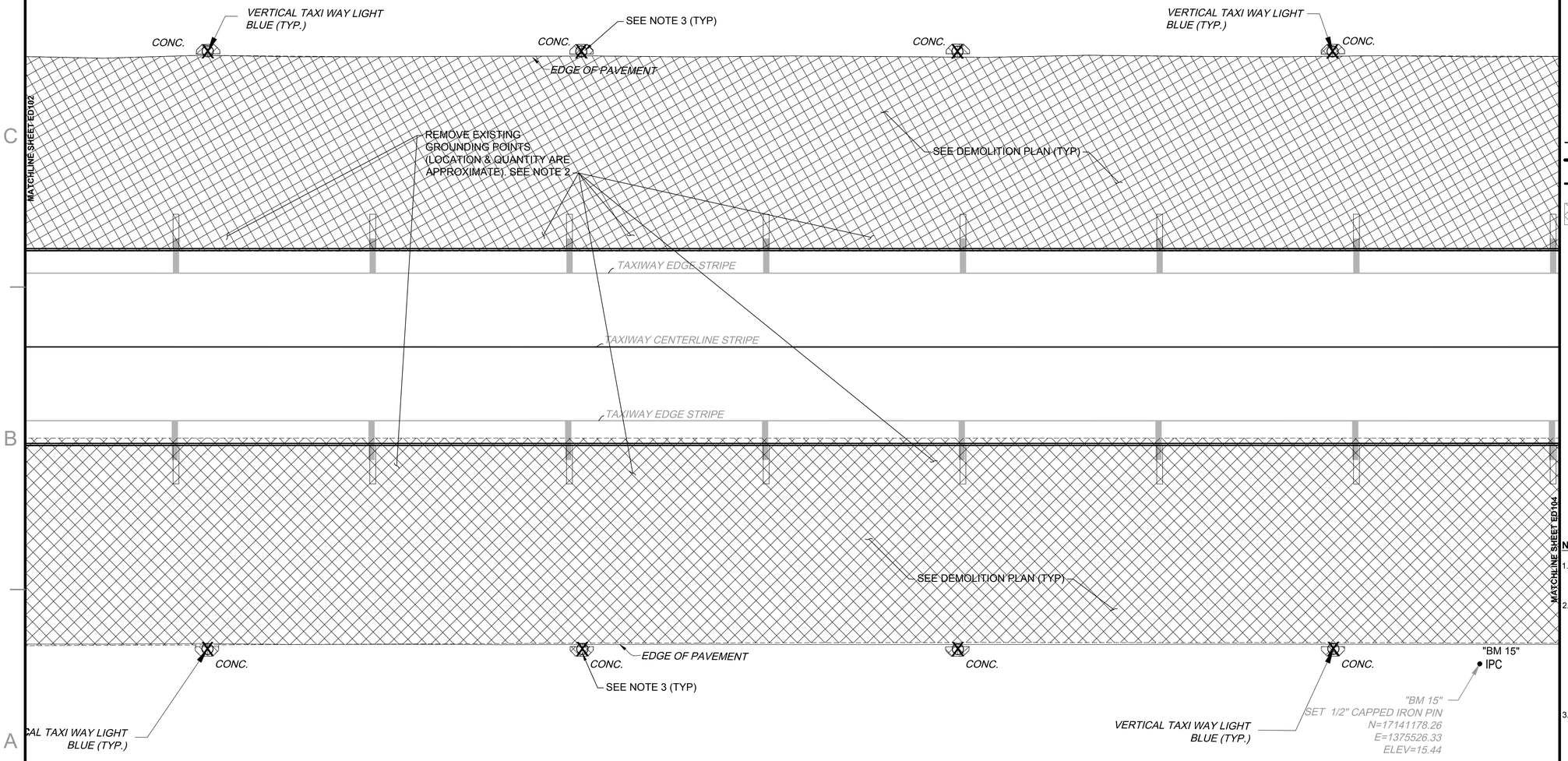

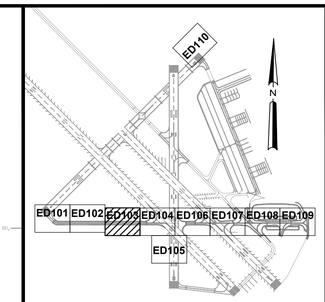

KEY MAP

ELECTRICAL SYMBOL LEGEND

SYMBOL STATUS

EXISTING	REMOVE	INSTALL	REPLACE	ADJUST
	X		R	A

SYMBOL	DESCRIPTION
	L-858 AIRFIELD GUIDANCE SIGN
	L-861T BASE MOUNTED MITL
	L-849 REIL (UNI-DIRECTIONAL)
	CONDUIT & CABLE
	EXISTING DUCT BANK
	DUCT BANK - BORED UNDER PAVEMENT
	DEMOLITION OF EXISTING ACC & PCC

NOTES

1. CONTRACTOR SHALL PRESERVE AND PROTECT ALL CABLES AND FIXTURES NOT IDENTIFIED TO BE REMOVED.
2. THE EXISTING GROUNDING POINTS & CONCRETE ENCASEMENT SHALL BE COMPLETELY REMOVED TO A DEPTH OF 6" MINIMUM & PATCHED WITH BITUMINOUS SURFACE COURSE IN 2" MAX. COMPACTED LIFTS. PRIOR TO BACKFILLING WITH ASPHALT, CORE THE EXISTING PAVEMENT FULL DEPTH TO PROVIDE A NEAT VERTICAL FACE ON ALL SIDES. PRIOR TO BACKFILLING, APPLY A BITUMINOUS PRIME COAT ON ALL PAVEMENT SURFACE AT A RATE OF ~0.15 GALLONS PER SQ.YD.
3. REMOVE EXISTING WIRE, FIXTURE AND FOUNDATION. PLUG CONDUIT OPENINGS, ABANDON CONDUIT, AND BACKFILL PER DEMOLITION REPAIR IN-SHOULDER PAVEMENT & TURF AREA DETAIL ON SHEET E-503.
4. NOT ALL DEMOLITION ITEMS THAT NEED TO BE REMOVED FOR THE ELECTRICAL WORKS ARE SHOWN. THE CONTRACTOR SHALL REVIEW THE ELECTRICAL LAYOUT SHEETS TO DETERMINE THE EXTENT OF DEMOLITION NEEDED. THE FINAL DETERMINATION OF THE AMOUNT OF DEMOLITION SHALL MADE BY THE CONTRACTOR OFFICER.

30 0 30 60
SCALE: 1"=30' FEET

SYM	DESCRIPTION	DATE	APPR
0	ISSUED FOR BID	8 JUN 15	

NAVFAC

STATE OF TEXAS
JON M. McCALMONT
100633
LICENSED PROFESSIONAL ENGINEER
8 JUN 15
SEAL

leidos
LEIDOS ENGINEERING, LLC
ONE WEST 3RD ST.
TULSA, OK 74103

DELTA AIRPORT CONSULTANTS, INC.
9711 Farrar Court, Suite 100
Richmond, Virginia 23236
phone: (804) 275-8301 • fax: (804) 275-8371
www.deltaairport.com
Delta Project No. 14072 A/E INFO

APPROVED
FOR COMMANDER NAVFAC
ACTIVITY
SATISFACTORY TO DATE
DES EFC DRW MRM CHK MWK
PROJECT MANAGER
IPT TECH. BRANCH HEAD
CHIEF ENG/ARCH (CORE)

DEPARTMENT OF THE NAVY
NAVAL FACILITIES ENGINEERING COMMAND
CIBLL CORE
NAVAL FACILITIES ENGINEERING COMMAND SOUTHEAST
NAVAL AIR STATION JACKSONVILLE
NAS CORPUS CHRISTI
CORPUS CHRISTI, TEXAS
NAS CORPUS CHRISTI AIRFIELD REPAIRS
TAXIWAY 'E'
ELECTRICAL DEMOLITION PLAN

SCALE: 1"=30'
EPROJECT NO.:
CONSTR. CONTR. NO.
NAVFAC DRAWING NO.
15095229
SHEET 101 OF 145
ED103
DRAWFORM REVISION: 5 APRIL 2012

FILE NAME: N:\14072\04 CAD_REPAIR_TWYE\1302443-E-ED103.dwg LAYOUT NAME: ED103 PLOTTED: Tuesday, June 09, 2015 - 10:02am USER: mrm

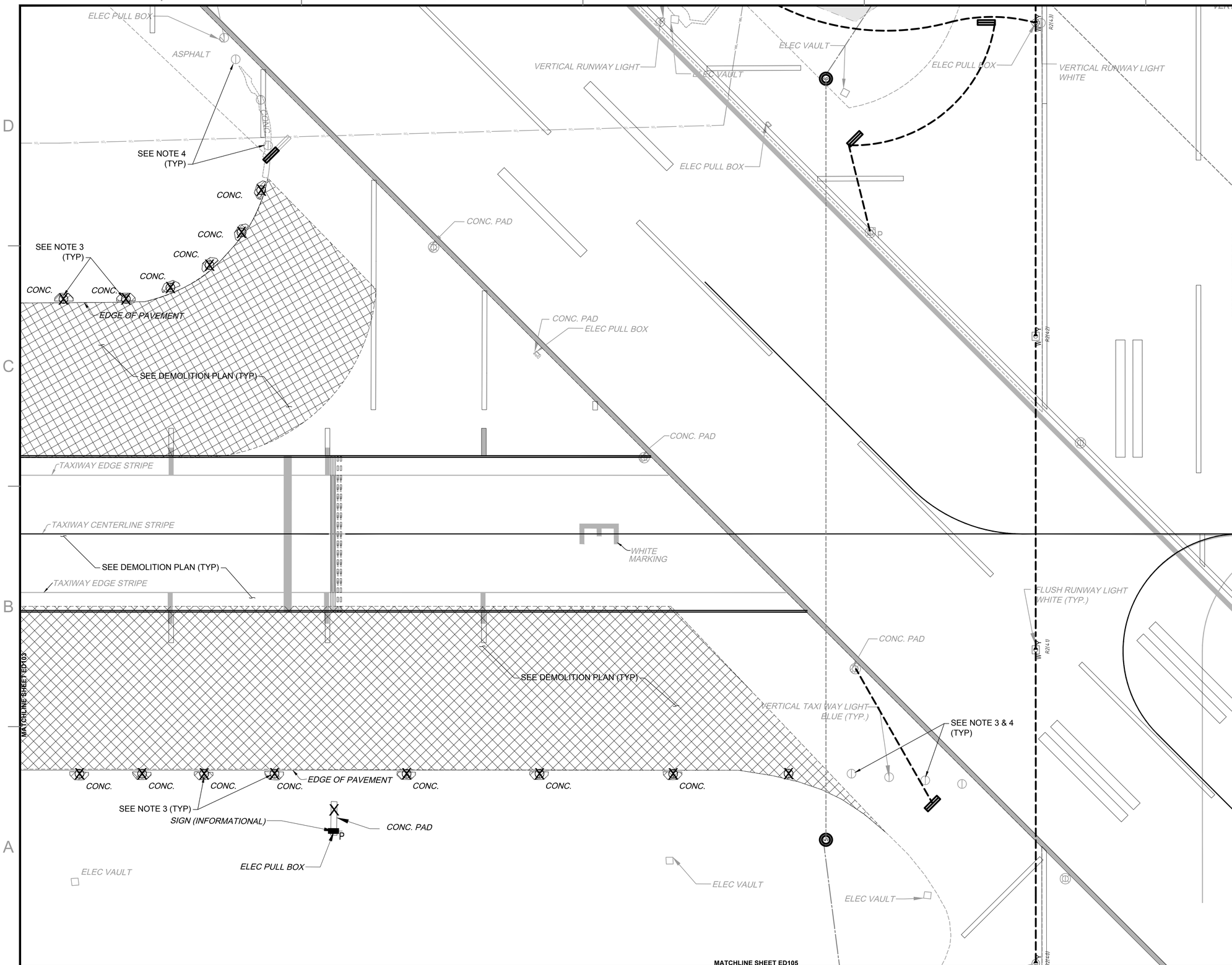

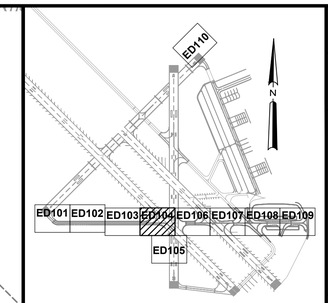

KEY MAP

ELECTRICAL SYMBOL LEGEND

SYMBOL STATUS

EXISTING	REMOVE	INSTALL	REPLACE	ADJUST
	X		R	A

SYMBOL	DESCRIPTION
	L-858 AIRFIELD GUIDANCE SIGN
	L-861T BASE MOUNTED MITL
	L-849 REIL (UNI-DIRECTIONAL)
	CONDUIT & CABLE
	EXISTING DUCT BANK
	DUCT BANK - BORED UNDER PAVEMENT
	DEMOLITION OF EXISTING ACC & PCC

NOTES

1. CONTRACTOR SHALL PRESERVE AND PROTECT ALL CABLES AND FIXTURES NOT IDENTIFIED TO BE REMOVED.
2. THE EXISTING GROUNDING POINTS & CONCRETE ENCASEMENT SHALL BE COMPLETELY REMOVED TO A DEPTH OF 6" MINIMUM & PATCHED WITH BITUMINOUS SURFACE COURSE IN 2" MAX. COMPACTED LIFTS. PRIOR TO BACKFILLING WITH ASPHALT, CORE THE EXISTING PAVEMENT FULL DEPTH TO PROVIDE A NEAT VERTICAL FACE ON ALL SIDES. PRIOR TO BACKFILLING, APPLY A BITUMINOUS PRIME COAT ON ALL PAVEMENT SURFACE AT A RATE OF ~0.15 GALLONS PER SQ.YD.
3. REMOVE EXISTING WIRE, FIXTURE AND FOUNDATION. PLUG CONDUIT OPENINGS, ABANDON CONDUIT, AND BACKFILL PER DEMOLITION REPAIR IN-SHOULDER PAVEMENT & TURF AREA DETAIL ON SHEET E-503.
4. NOT ALL DEMOLITION ITEMS THAT NEED TO BE REMOVED FOR THE ELECTRICAL WORKS ARE SHOWN. THE CONTRACTOR SHALL REVIEW THE ELECTRICAL LAYOUT SHEETS TO DETERMINE THE EXTENT OF DEMOLITION NEEDED. THE FINAL DETERMINATION OF THE AMOUNT OF DEMOLITION SHALL MADE BY THE CONTRACTOR OFFICER.

30 0 30 60
SCALE: 1"=30' FEET

SYM	DESCRIPTION	DATE	APPR
0	ISSUED FOR BID	8 JUN 15	

NAVFAC

STATE OF TEXAS
JON M. McCALMONT
100633
LICENSED PROFESSIONAL ENGINEER
8 JUN 15
SEAL

leidos
LEIDOS ENGINEERING, LLC
ONE WEST 3RD ST.
TULSA, OK 74103

DELTA AIRPORT CONSULTANTS, INC.
9711 Farrar Court, Suite 100
Richmond, Virginia 23236
phone: (804) 275-8301 • fax: (804) 275-8371
www.deltaairport.com
Delta Project No. 14072 A/E INFO

APPROVED
FOR COMMANDER NAVFAC
ACTIVITY
SATISFACTORY TO DATE
DES EFC DRW MRM CHK MWK
PROJECT MANAGER
IPT TECH. BRANCH HEAD
CHIEF ENG/ARCH (CORE)

DEPARTMENT OF THE NAVY
NAVAL FACILITIES ENGINEERING COMMAND
CIBIL CORE
NAVAL FACILITIES ENGINEERING COMMAND SOUTHEAST
NAVAL AIR STATION JACKSONVILLE
NAS CORPUS CHRISTI
CORPUS CHRISTI, TEXAS
NAS CORPUS CHRISTI AIRFIELD REPAIRS
TAXIWAY 'E'
ELECTRICAL DEMOLITION PLAN

SCALE: 1"=30'
EPROJECT NO.:
CONSTR. CONTR. NO.
NAVFAC DRAWING NO.
15095230
SHEET 102 OF 145
ED104
DRAWFORM REVISION: 5 APRIL 2012

FILE NAME: N:\140720\04 CAD_REPAIR_TWYE\1302443-E-ED104.dwg LAYOUT NAME: ED104 PLOTTED: Tuesday, June 09, 2015 - 10:03am USER: mrm

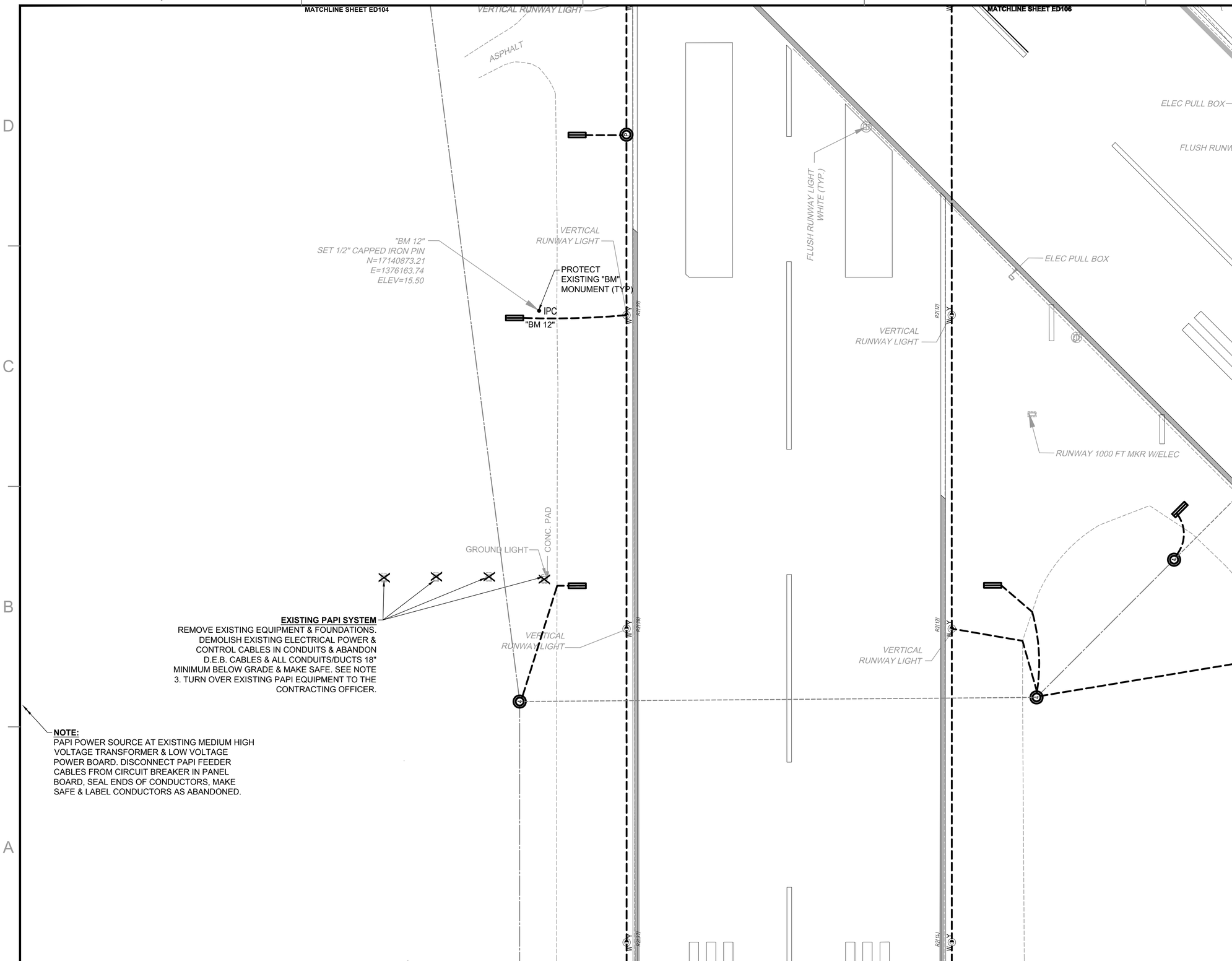

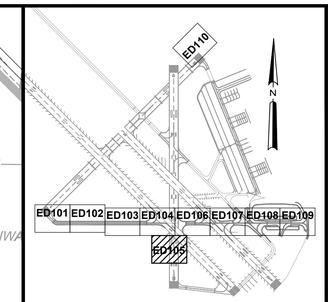

KEY MAP

ELECTRICAL SYMBOL LEGEND

SYMBOL STATUS

EXISTING	REMOVE	INSTALL	REPLACE	ADJUST
	X		R	A

SYMBOL	DESCRIPTION
	L-858 AIRFIELD GUIDANCE SIGN
	L-861T BASE MOUNTED MITL
	L-849 REIL (UNI-DIRECTIONAL)
	CONDUIT & CABLE
	EXISTING DUCT BANK
	DUCT BANK - BORED UNDER PAVEMENT
	DEMOLITION OF EXISTING ACC & PCC

NOTES

1. CONTRACTOR SHALL PRESERVE AND PROTECT ALL CABLES AND FIXTURES NOT IDENTIFIED TO BE REMOVED.
2. THE EXISTING GROUNDING POINTS & CONCRETE ENCASEMENT SHALL BE COMPLETELY REMOVED TO A DEPTH OF 6" MINIMUM & PATCHED WITH BITUMINOUS SURFACE COURSE IN 2" MAX. COMPACTED LIFTS. PRIOR TO BACKFILLING WITH ASPHALT, CORE THE EXISTING PAVEMENT FULL DEPTH TO PROVIDE A NEAT VERTICAL FACE ON ALL SIDES. PRIOR TO BACKFILLING, APPLY A BITUMINOUS PRIME COAT ON ALL PAVEMENT SURFACE AT A RATE OF ~0.15 GALLONS PER SQ.YD.
3. REMOVE EXISTING WIRE, FIXTURE AND FOUNDATION. PLUG CONDUIT OPENINGS, ABANDON CONDUIT, AND BACKFILL PER DEMOLITION REPAIR IN-SHOULDER PAVEMENT & TURF AREA DETAIL ON SHEET E-503.
4. NOT ALL DEMOLITION ITEMS THAT NEED TO BE REMOVED FOR THE ELECTRICAL WORKS ARE SHOWN. THE CONTRACTOR SHALL REVIEW THE ELECTRICAL LAYOUT SHEETS TO DETERMINE THE EXTENT OF DEMOLITION NEEDED. THE FINAL DETERMINATION OF THE AMOUNT OF DEMOLITION SHALL MADE BY THE CONTRACTOR OFFICER.

30 0 30 60
SCALE: 1"=30' FEET

SYM	DESCRIPTION	DATE	APPR
0	ISSUED FOR BID	8 JUN 15	

NAVFAC

STATE OF TEXAS
JON M. McCALMONT
100633
LICENSED PROFESSIONAL ENGINEER
15 JUN 8
SEAL

leidos
LEIDOS ENGINEERING, LLC
ONE WEST 3RD ST.
TULSA, OK 74103

DELTA AIRPORT CONSULTANTS, INC.
9711 Farrar Court, Suite 100
Richmond, Virginia 23236
phone: (804) 275-8301 • fax: (804) 275-8371
www.deltaairport.com
Delta Project No. 14072 A/E INFO

APPROVED
FOR COMMANDER NAVFAC
ACTIVITY
SATISFACTORY TO DATE
DES EFC DRW MRM CHK MWK
PROJECT MANAGER
IPT TECH. BRANCH HEAD
CHIEF ENG/ARCH (CORE)

DEPARTMENT OF THE NAVY
NAVAL FACILITIES ENGINEERING COMMAND
CIBL CORE
NAVAL FACILITIES ENGINEERING COMMAND SOUTHEAST
NAVAL AIR STATION JACKSONVILLE
NAS CORPUS CHRISTI
CORPUS CHRISTI, TEXAS
NAS CORPUS CHRISTI AIRFIELD REPAIRS
TAXIWAY 'E'
ELECTRICAL DEMOLITION PLAN

SCALE: 1"=30'
EPROJECT NO.:
CONSTR. CONTR. NO.
NAVFAC DRAWING NO. 15095231
SHEET 103 OF 145
ED105

DRAWFORM REVISION: 5 APRIL 2012

FILE NAME: N:\14072\04 CAD_REPAIR_TWY E\1302443-E-ED105.dwg LAYOUT NAME: ED105 PLOTTED: Tuesday, June 09, 2015 - 10:03am USER: mrm