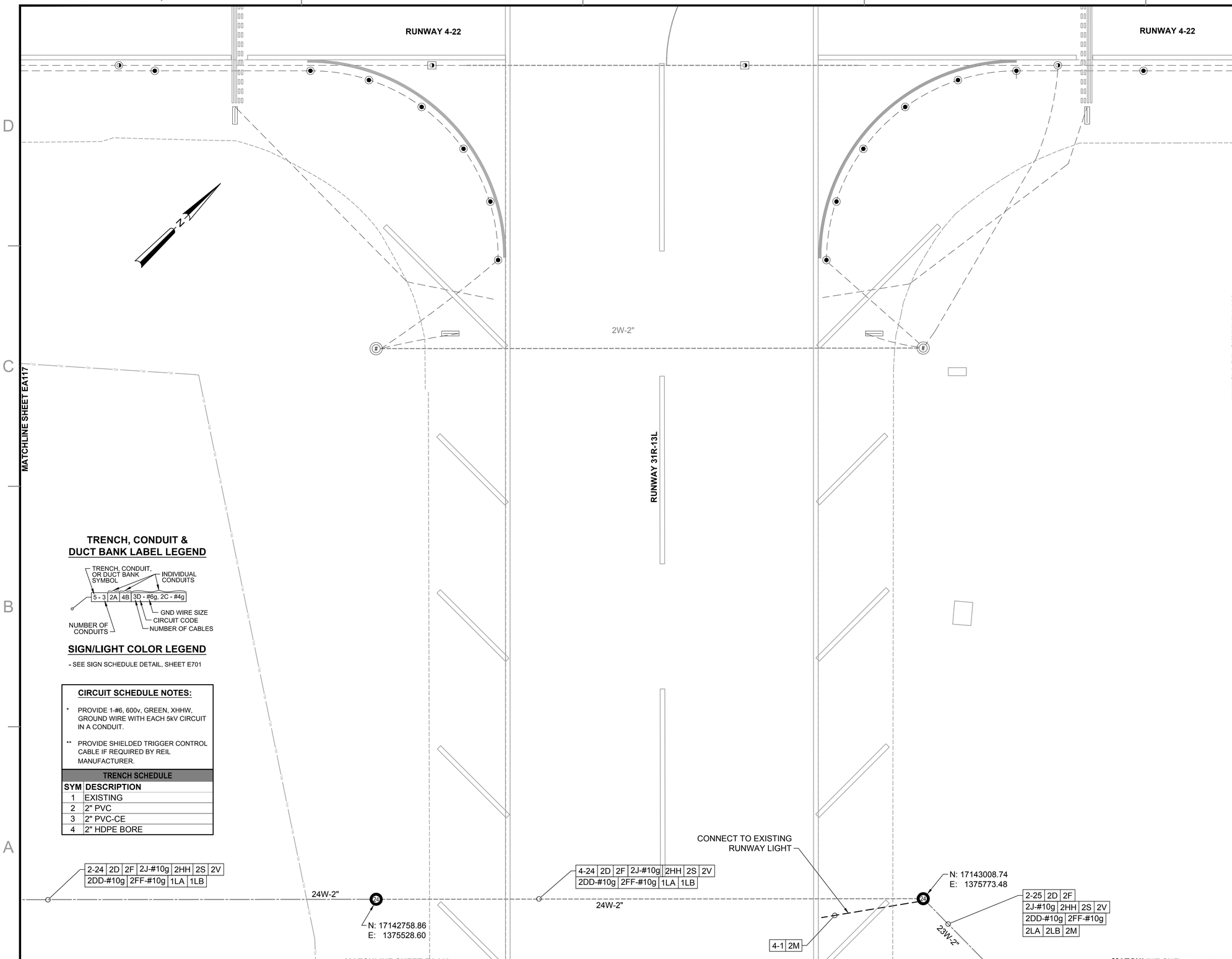

TRENCH, CONDUIT & DUCT BANK LABEL LEGEND

TRENCH, CONDUIT, OR DUCT BANK SYMBOL — INDIVIDUAL CONDUITS

5 - 3 | 2A | 4B | 3D - #6g, 2C - #4g

NUMBER OF CONDUITS — GND WIRE SIZE — CIRCUIT CODE — NUMBER OF CABLES

SIGN/LIGHT COLOR LEGEND

- SEE SIGN SCHEDULE DETAIL, SHEET E701

CIRCUIT SCHEDULE NOTES:

* PROVIDE 1-#6, 600v, GREEN, XHHW, GROUND WIRE WITH EACH 5kV CIRCUIT IN A CONDUIT.

** PROVIDE SHIELDED TRIGGER CONTROL CABLE IF REQUIRED BY REIL MANUFACTURER.

TRENCH SCHEDULE

SYM	DESCRIPTION
1	EXISTING
2	2" PVC
3	2" PVC-CE
4	2" HDPE BORE

KEY MAP

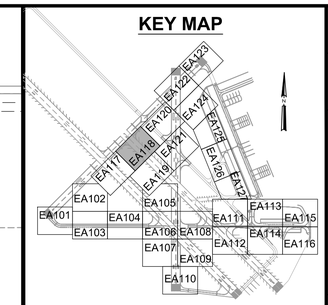

ELECTRICAL SYMBOL LEGEND

SYMBOL STATUS

EXISTING | REMOVE | INSTALL | REPLACE (R) | ADJUST (A)

SYMBOL	DESCRIPTION
	L-858 (L) AIRFIELD GUIDANCE SIGN
	L-861T (L) BASE MOUNTED MITL
	L-852T(L) IN-PAVEMENT MITL
R G	L-862E (L) BASE MOUNTED THRESHOLD LIGHT
#	L-867 ELECTRICAL PULLCAN (# INDICATES NUMBER OF CANS)
P	FUTURE L-867 ELECTRICAL PULLCAN
	L-849 (L) REIL (UNI-DIRECTIONAL)
	CONDUIT & CABLE
	DUCT BANK
	DUCT BANK - BORED UNDER PAVEMENT
	FUTURE DUCT BANK

CIRCUIT SCHEDULE

SYM	CIRCUIT & CABLE	SIZE
A	RUNWAY 4-22 EDGE	#8, 5kV, TYPE C
B	TAXIWAY C2 EDGE	#8, 5kV, TYPE C
C	TAXIWAY C3 EDGE	#8, 5kV, TYPE C
D	PAPI RUNWAY 4	#8, 5kV, TYPE C
E	PAPI RUNWAY 22	#8, 5kV, TYPE C
F	REIL RUNWAY 4 POWER	#8, 5kV, TYPE C
G	REIL RUNWAY 4 CONTROL	#12, 600v, TYPE C
H	REIL RUNWAY 22 POWER	#8, 5kV, TYPE C
I	REIL RUNWAY 22 CONTROL	#12, 600v, TYPE C
J	WIND CONE RUNWAY 4	#8, 600v, TYPE C
K	WIND CONE RUNWAY 17-22	#10, 600v, TYPE C
LA	RUNWAY 13R-31L NORTH	#8, 5kV, TYPE C
LB	RUNWAY 13R-31L SOUTH	#8, 5kV, TYPE C
M	RUNWAY 13L-31R EDGE	#8, 5kV, TYPE C
N	TAXIWAY C4 EDGE	#8, 5kV, TYPE C
P	RUNWAY 17-35 EDGE	#8, 5kV, TYPE C
Q	TAXIWAY C5	#8, 5kV, TYPE C
R	TAXIWAY C6	#8, 5kV, TYPE C
S	REIL POWER RUNWAY 35	#8, 5kV, TYPE C
T	REIL CONTROL RUNWAY 35	#12, 600v, TYPE C
V	PAPI RUNWAY 35	#8, 5kV, TYPE C
X	REIL POWER RUNWAY 17	#8, 5kV, TYPE C
Y	REIL CONTROL RUNWAY 17	#12, 600v, TYPE C
Z	TAXIWAY C1	#8, 5kV, TYPE C
AA	TAXIWAY C4	#8, 5kV, TYPE C
BB	PAPI RUNWAY 17	#8, 5kV, TYPE C
CC	TAXIWAY C11	#8, 5kV, TYPE C
DD	WIND CONE RUNWAY 35	#10, 600v, TYPE C
EE	WIND CONE RUNWAY 13L	#10, 600v, TYPE C
FF	WIND CONE RUNWAY 31L	#10, 600v, TYPE C
GG	TAXIWAY C7	#8, 5kV, TYPE C
HH	TAXIWAY C8	#8, 5kV, TYPE C
II	TAXIWAY C9	#8, 5kV, TYPE C
JJ	TAXIWAY C10	#8, 5kV, TYPE C
KK	TAXIWAY C11	#8, 5kV, TYPE C
LL	TAXIWAY C12	#8, 5kV, TYPE C
MM	TAXIWAY C13	#8, 5kV, TYPE C
NN	TAXIWAY C14	#8, 5kV, TYPE C
PP	TAXIWAY C15	#8, 5kV, TYPE C
QQ	TAXIWAY C16	#8, 5kV, TYPE C
*	EMPTY CONDUIT	

NOTE:
SPARE CONDUITS PROVIDED FOR FUTURE USE.

30 0 30 60
SCALE: 1"=30' FEET

SYM	DESCRIPTION	DATE	APPR
0	ISSUED FOR BID	8 JUN 15	

NAVFAC

STATE OF TEXAS — JON M. McCALMONT — 100633 — LICENSED PROFESSIONAL ENGINEER — 8 JUN 15
SEAL

leidos
LEIDOS ENGINEERING, LLC
ONE WEST 3RD ST.
TULSA, OK 74103

DELTA AIRPORT CONSULTANTS, INC.
9711 Farrar Court, Suite 100
Richmond, Virginia 23236
phone: (804) 275-8301 • fax: (804) 275-8371
www.deltaairport.com

Delta Project No. 14072 A/E INFO

APPROVED
FOR COMMANDER NAVFAC
ACTIVITY
SATISFACTORY TO DATE
DES EFC DRW MRM CHK MWK
PROJECT MANAGER
IPT TECH. BRANCH HEAD
CHIEF ENG/ARCH (CORE)

DEPARTMENT OF THE NAVY
NAVAL FACILITIES ENGINEERING COMMAND
CIBL CORE
NAVAL FACILITIES ENGINEERING COMMAND SOUTHEAST
NAVAL AIR STATION JACKSONVILLE

NAS CORPUS CHRISTI
CORPUS CHRISTI, TEXAS

NAS CORPUS CHRISTI AIRFIELD REPAIRS
TAXIWAY 'E'

ELECTRICAL LAYOUT

SCALE 1"=30"
EPROJECT NO.:
CONSTR. CONTR. NO.
NAVFAC DRAWING NO.
15095254
SHEET 126 OF 145

EA118

DRAWFORM REVISION: 5 APRIL 2012

FILE NAME: N:\14072\04 CAD_REPAIR_TWY\1302443-E-EA118.dwg LAYOUT NAME: EA118 PLOTTED: Tuesday, June 09, 2015 - 10:12am USER: mrm

MATCHLINE SHEET EA118

MATCHLINE SHEET EA118

8W-2"

2-8 | 2S | 2V | 2DD-#10g | 2FF-#10g

TRENCH, CONDUIT & DUCT BANK LABEL LEGEND

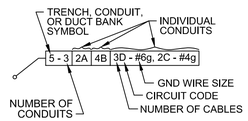

SIGN/LIGHT COLOR LEGEND

- SEE SIGN SCHEDULE DETAIL, SHEET E701

CIRCUIT SCHEDULE NOTES:

* PROVIDE 1-#6, 600v, GREEN, XHHW, GROUND WIRE WITH EACH 5kV CIRCUIT IN A CONDUIT.

** PROVIDE SHIELDED TRIGGER CONTROL CABLE IF REQUIRED BY REIL MANUFACTURER.

TRENCH SCHEDULE	
SYM	DESCRIPTION
1	EXISTING
2	2" PVC
3	2" PVC-CE
4	2" HDPE BORE

8W-2"

2-8 | 2S | 2V | 2DD-#10g | 2FF-#10g

PAR

MATCHLINE SHEET EA105

MATCHLINE SHEET EA105

B

A

114

RUNWAY 13L-31R

MATCHLINE SHEET EA121

KEY MAP

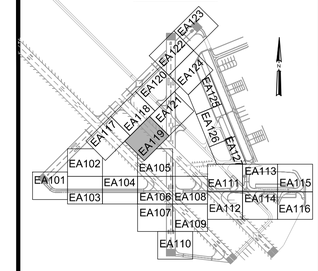

ELECTRICAL SYMBOL LEGEND

SYMBOL STATUS

EXISTING | REMOVE | INSTALL | REPLACE (R) | ADJUST (A)

SYMBOL	DESCRIPTION
	L-858 (L) AIRFIELD GUIDANCE SIGN
	L-861T (L) BASE MOUNTED MITL
	L-852T(L) IN-PAVEMENT MITL
R G	L-862E (L) BASE MOUNTED THRESHOLD LIGHT
#	L-867 ELECTRICAL PULLCAN (# INDICATES NUMBER OF CANS)
P	FUTURE L-867 ELECTRICAL PULLCAN
	L-849 (L) REIL (UNI-DIRECTIONAL)
	CONDUIT & CABLE
	DUCT BANK
	DUCT BANK - BORED UNDER PAVEMENT
	FUTURE DUCT BANK

CIRCUIT SCHEDULE

SYM	CIRCUIT & CABLE	SIZE
A	RUNWAY 4-22 EDGE	#8, 5kV, TYPE C
B	TAXIWAY C2 EDGE	#8, 5kV, TYPE C
C	TAXIWAY C3 EDGE	#8, 5kV, TYPE C
D	PAPI RUNWAY 4	#8, 5kV, TYPE C
E	PAPI RUNWAY 22	#8, 5kV, TYPE C
F	REIL RUNWAY 4 POWER	#8, 5kV, TYPE C
G	REIL RUNWAY 4 CONTROL	#12, 600v, TYPE C
H	REIL RUNWAY 22 POWER	#8, 5kV, TYPE C
I	REIL RUNWAY 22 CONTROL	#12, 600v, TYPE C
J	WIND CONE RUNWAY 4	#8, 600v, TYPE C
K	WIND CONE RUNWAY 17-22	#10, 600v, TYPE C
LA	RUNWAY 13R-31L NORTH	#8, 5kV, TYPE C
LB	RUNWAY 13R-31L SOUTH	#8, 5kV, TYPE C
M	RUNWAY 13L-31R EDGE	#8, 5kV, TYPE C
N	TAXIWAY C4 EDGE	#8, 5kV, TYPE C
P	RUNWAY 17-35 EDGE	#8, 5kV, TYPE C
Q	TAXIWAY C5	#8, 5kV, TYPE C
R	TAXIWAY C6	#8, 5kV, TYPE C
S	REIL POWER RUNWAY 35	#8, 5kV, TYPE C
T	REIL CONTROL RUNWAY 35	#12, 600v, TYPE C
V	PAPI RUNWAY 35	#8, 5kV, TYPE C
X	REIL POWER RUNWAY 17	#8, 5kV, TYPE C
Y	REIL CONTROL RUNWAY 17	#12, 600v, TYPE C
Z	TAXIWAY C1	#8, 5kV, TYPE C
AA	TAXIWAY C4	#8, 5kV, TYPE C
BB	PAPI RUNWAY 17	#8, 5kV, TYPE C
CC	TAXIWAY C11	#8, 5kV, TYPE C
DD	WIND CONE RUNWAY 35	#10, 600v, TYPE C
EE	WIND CONE RUNWAY 13L	#10, 600v, TYPE C
FF	WIND CONE RUNWAY 31L	#10, 600v, TYPE C
GG	TAXIWAY C7	#8, 5kV, TYPE C
HH	TAXIWAY C8	#8, 5kV, TYPE C
II	TAXIWAY C9	#8, 5kV, TYPE C
JJ	TAXIWAY C10	#8, 5kV, TYPE C
KK	TAXIWAY C11	#8, 5kV, TYPE C
LL	TAXIWAY C12	#8, 5kV, TYPE C
MM	TAXIWAY C13	#8, 5kV, TYPE C
NN	TAXIWAY C14	#8, 5kV, TYPE C
PP	TAXIWAY C15	#8, 5kV, TYPE C
QQ	TAXIWAY C16	#8, 5kV, TYPE C
*	EMPTY CONDUIT	

NOTE:
SPARE CONDUITS PROVIDED FOR FUTURE USE.

30 0 30 60
SCALE: 1"=30' FEET

SYM	DESCRIPTION	DATE	APPR
0	ISSUED FOR BID	8 JUN 15	

NAVFAC

STATE OF TEXAS
JON M. McCALMONT
100633
LICENSED PROFESSIONAL ENGINEER
8 JUN 15
SEAL

leidos
LEIDOS ENGINEERING, LLC
ONE WEST 3RD ST.
TULSA, OK 74103

DELTA AIRPORT CONSULTANTS, INC.
9711 Forror Court, Suite 100
Richmond, Virginia 23236
phone: (804) 275-8301 • fax: (804) 275-8371
www.deltaairport.com
Delta Project No. 14072 A/E INFO

APPROVED
FOR COMMANDER NAVFAC
ACTIVITY
SATISFACTORY TO DATE
DES EFC DRW MRM CHK MWK
PROJECT MANAGER
IPT TECH. BRANCH HEAD
CHIEF ENG/ARCH (CORE)

DEPARTMENT OF THE NAVY
NAVAL FACILITIES ENGINEERING COMMAND
CIBIL CORE
NAVAL FACILITIES ENGINEERING COMMAND SOUTHEAST
NAVAL AIR STATION JACKSONVILLE
NAS CORPUS CHRISTI
CORPUS CHRISTI, TEXAS
NAS CORPUS CHRISTI AIRFIELD REPAIRS
TAXIWAY 'E'
ELECTRICAL LAYOUT

SCALE: 1"=30"
EPROJECT NO.:
CONSTR. CONTR. NO.
NAVFAC DRAWING NO.
15095255
SHEET 127 OF 145
EA119

DRAWFORM REVISION: 5 APRIL 2012

FILE NAME: N:\140720\04 CAD_REPAIR_TWYE\1302443-E-EA119.dwg LAYOUT NAME: EA119 PLOTTED: Tuesday, June 09, 2015 - 10:12am USER: mrm

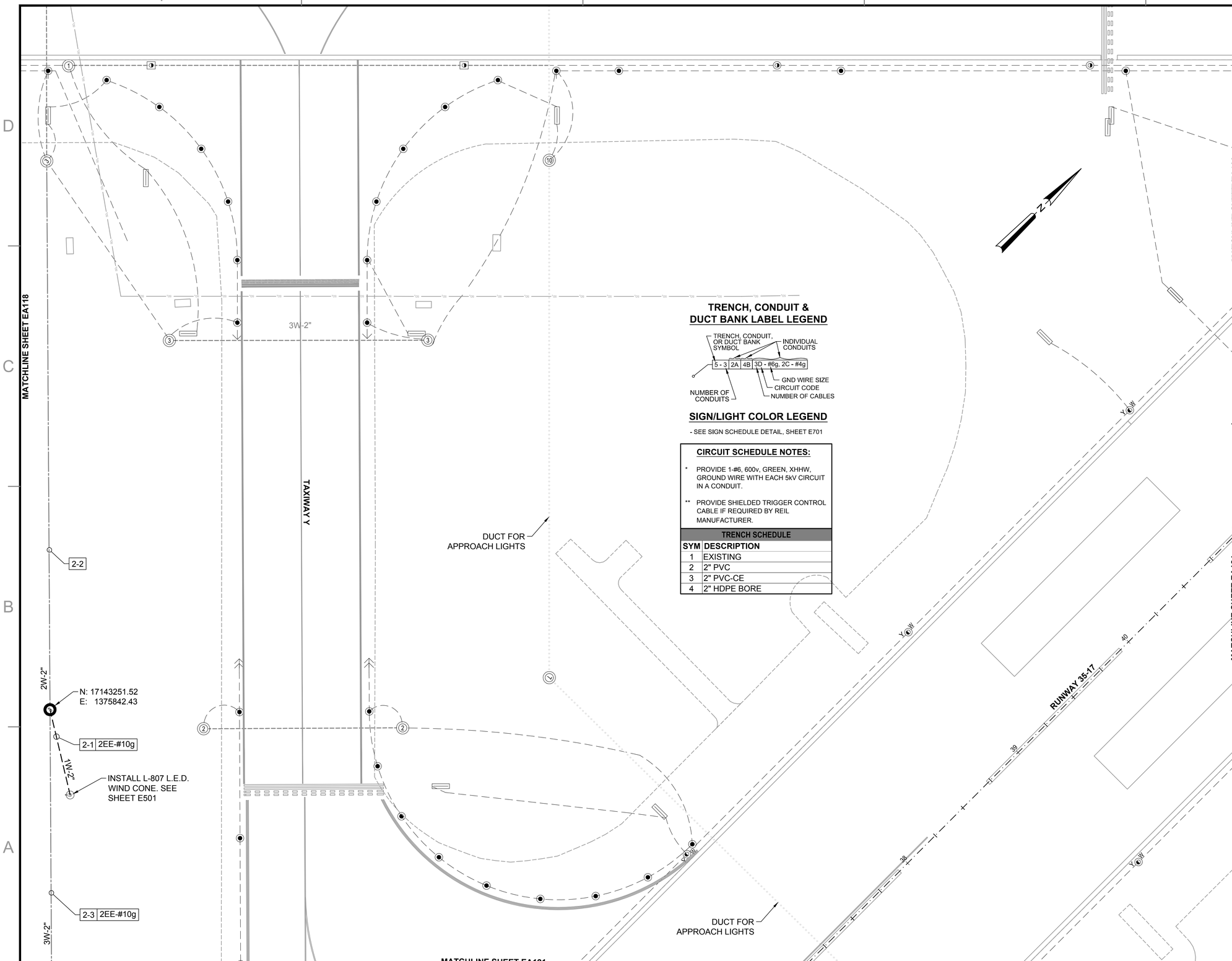

TRENCH, CONDUIT & DUCT BANK LABEL LEGEND

TRENCH, CONDUIT, OR DUCT BANK SYMBOL — INDIVIDUAL CONDUITS

5 - 3 | 2A | 4B | 3D - #6g, 2C - #4g

NUMBER OF CONDUITS — GND WIRE SIZE — CIRCUIT CODE — NUMBER OF CABLES

SIGN/LIGHT COLOR LEGEND

- SEE SIGN SCHEDULE DETAIL, SHEET E701

CIRCUIT SCHEDULE NOTES:

* PROVIDE 1-#6, 600v, GREEN, XHHW, GROUND WIRE WITH EACH 5kV CIRCUIT IN A CONDUIT.

** PROVIDE SHIELDED TRIGGER CONTROL CABLE IF REQUIRED BY REIL MANUFACTURER.

TRENCH SCHEDULE

SYM	DESCRIPTION
1	EXISTING
2	2" PVC
3	2" PVC-CE
4	2" HDPE BORE

KEY MAP

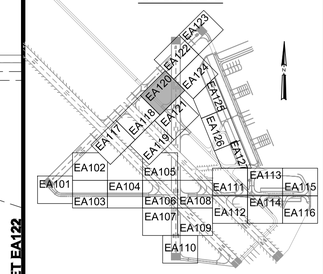

ELECTRICAL SYMBOL LEGEND

SYMBOL STATUS

EXISTING | REMOVE | INSTALL | REPLACE | ADJUST

SYMBOL	DESCRIPTION
	L-858 (L) AIRFIELD GUIDANCE SIGN
	L-861T (L) BASE MOUNTED MITL
	L-852T(L) IN-PAVEMENT MITL
R G	L-862E (L) BASE MOUNTED THRESHOLD LIGHT
#	L-867 ELECTRICAL PULLCAN (# INDICATES NUMBER OF CANS)
P	FUTURE L-867 ELECTRICAL PULLCAN
	L-849 (L) REIL (UNI-DIRECTIONAL)
	CONDUIT & CABLE
	DUCT BANK
	DUCT BANK - BORED UNDER PAVEMENT
	FUTURE DUCT BANK

CIRCUIT SCHEDULE

SYM	CIRCUIT & CABLE	SIZE
A	RUNWAY 4-22 EDGE	#8, 5kV, TYPE C
B	TAXIWAY C2 EDGE	#8, 5kV, TYPE C
C	TAXIWAY C3 EDGE	#8, 5kV, TYPE C
D	PAPI RUNWAY 4	#8, 5kV, TYPE C
E	PAPI RUNWAY 22	#8, 5kV, TYPE C
F	REIL RUNWAY 4 POWER	#8, 5kV, TYPE C
G	REIL RUNWAY 4 CONTROL	#12, 600v, TYPE C
H	REIL RUNWAY 22 POWER	#8, 5kV, TYPE C
I	REIL RUNWAY 22 CONTROL	#12, 600v, TYPE C
J	WIND CONE RUNWAY 4	#8, 600v, TYPE C
K	WIND CONE RUNWAY 17-22	#10, 600v, TYPE C
LA	RUNWAY 13R-31L NORTH	#8, 5kV, TYPE C
LB	RUNWAY 13R-31L SOUTH	#8, 5kV, TYPE C
M	RUNWAY 13L-31R EDGE	#8, 5kV, TYPE C
N	TAXIWAY C4 EDGE	#8, 5kV, TYPE C
P	RUNWAY 17-35 EDGE	#8, 5kV, TYPE C
Q	TAXIWAY C5	#8, 5kV, TYPE C
R	TAXIWAY C6	#8, 5kV, TYPE C
S	REIL POWER RUNWAY 35	#8, 5kV, TYPE C
T	REIL CONTROL RUNWAY 35	#12, 600v, TYPE C
V	PAPI RUNWAY 35	#8, 5kV, TYPE C
X	REIL POWER RUNWAY 17	#8, 5kV, TYPE C
Y	REIL CONTROL RUNWAY 17	#12, 600v, TYPE C
Z	TAXIWAY C1	#8, 5kV, TYPE C
AA	TAXIWAY C4	#8, 5kV, TYPE C
BB	PAPI RUNWAY 17	#8, 5kV, TYPE C
CC	TAXIWAY C11	#8, 5kV, TYPE C
DD	WIND CONE RUNWAY 35	#10, 600v, TYPE C
EE	WIND CONE RUNWAY 13L	#10, 600v, TYPE C
FF	WIND CONE RUNWAY 31L	#10, 600v, TYPE C
GG	TAXIWAY C7	#8, 5kV, TYPE C
HH	TAXIWAY C8	#8, 5kV, TYPE C
II	TAXIWAY C9	#8, 5kV, TYPE C
JJ	TAXIWAY C10	#8, 5kV, TYPE C
KK	TAXIWAY C11	#8, 5kV, TYPE C
LL	TAXIWAY C12	#8, 5kV, TYPE C
MM	TAXIWAY C13	#8, 5kV, TYPE C
NN	TAXIWAY C14	#8, 5kV, TYPE C
PP	TAXIWAY C15	#8, 5kV, TYPE C
QQ	TAXIWAY C16	#8, 5kV, TYPE C
*	EMPTY CONDUIT	

NOTE:
SPARE CONDUITS PROVIDED FOR FUTURE USE.

30 0 30 60
SCALE: 1"=30' FEET

SYM	DESCRIPTION	DATE	APPR
0	ISSUED FOR BID	8 JUN 15	

NAVFAC

STATE OF TEXAS — JON M. McCALMONT — 100633 — LICENSED PROFESSIONAL ENGINEER — 15 JUNE 3 — SEAL

leidos
LEIDOS ENGINEERING, LLC
ONE WEST 3RD ST.
TULSA, OK 74103

DELTA AIRPORT CONSULTANTS, INC.
9711 Farrar Court, Suite 100
Richmond, Virginia 23236
phone: (804) 275-8301 • fax: (804) 275-8371
www.deltaairport.com
Delta Project No. 14072 A/E INFO

APPROVED
FOR COMMANDER NAVFAC
ACTIVITY
SATISFACTORY TO DATE
DES EFC DRW MRM CHK MWK
PROJECT MANAGER
IPT TECH. BRANCH HEAD
CHIEF ENG/ARCH (CORE)

DEPARTMENT OF THE NAVY
NAVAL FACILITIES ENGINEERING COMMAND
CIBL CORE
NAVAL FACILITIES ENGINEERING COMMAND SOUTHEAST
NAS CORPUS CHRISTI
NAVAL AIR STATION JACKSONVILLE
CORPUS CHRISTI, TEXAS

NAS CORPUS CHRISTI AIRFIELD REPAIRS
TAXIWAY 'E'
ELECTRICAL LAYOUT

SCALE: 1"=30"
EPROJECT NO.:
CONSTR. CONTR. NO.
NAVFAC DRAWING NO.
15095256
SHEET 128 OF 145
EA120

DRAWFORM REVISION: 5 APRIL 2012

FILE NAME: N:\14072\04 CAD_REPAIR_TWYE\1302443-E-EA120.dwg LAYOUT NAME: EA120 PLOTTED: Tuesday, June 09, 2015 - 10:13am USER: mrm

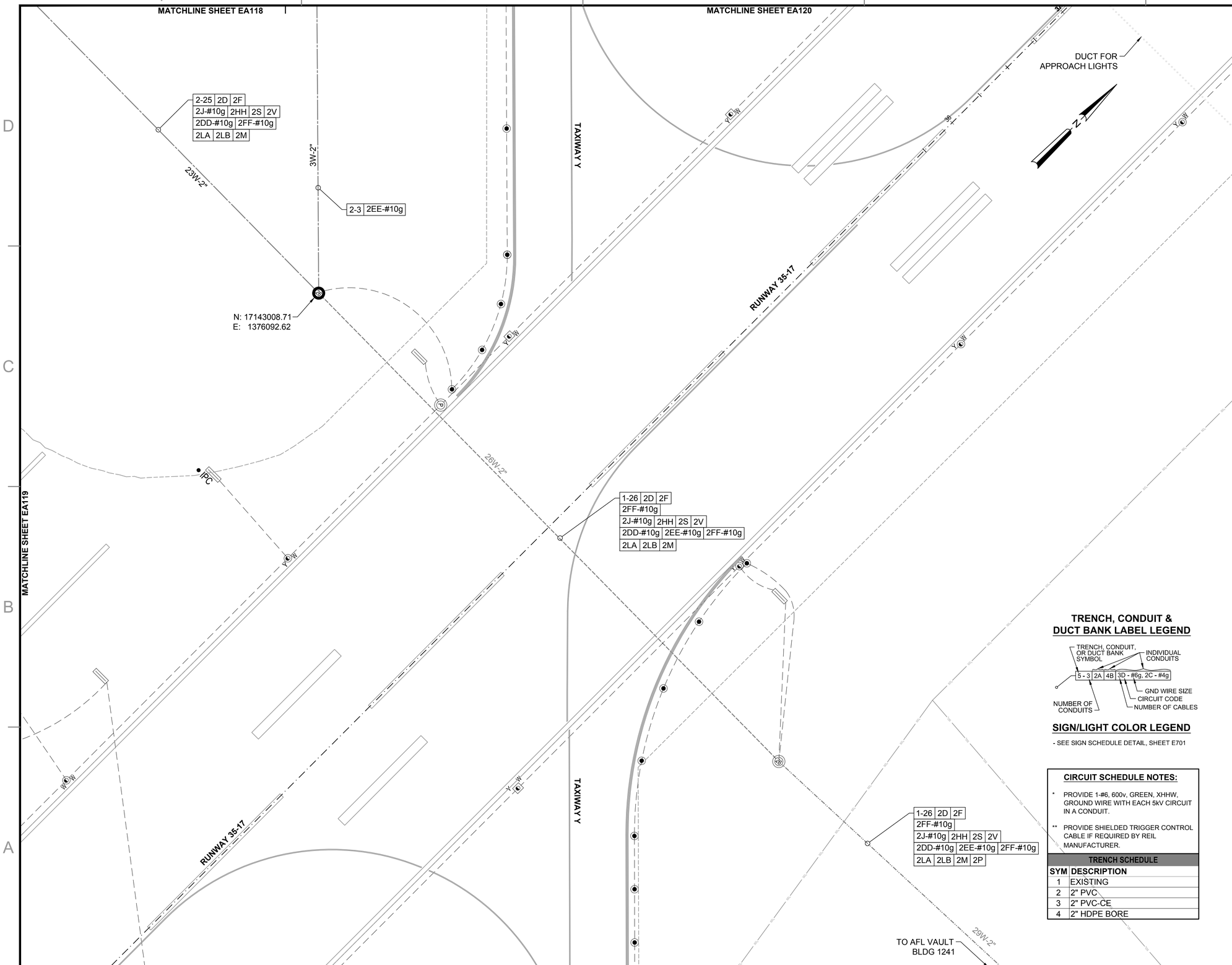

KEY MAP

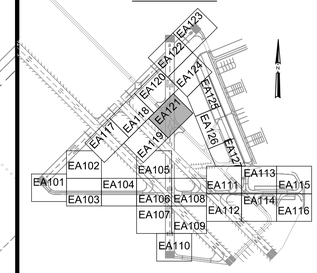

ELECTRICAL SYMBOL LEGEND

SYMBOL STATUS

EXISTING | REMOVE | INSTALL | REPLACE (R) | ADJUST (A)

SYMBOL	DESCRIPTION
	L-858 (L) AIRFIELD GUIDANCE SIGN
	L-861T (L) BASE MOUNTED MITL
	L-852T(L) IN-PAVEMENT MITL
R G	L-862E (L) BASE MOUNTED THRESHOLD LIGHT
#	L-867 ELECTRICAL PULLCAN (# INDICATES NUMBER OF CANS)
P	FUTURE L-867 ELECTRICAL PULLCAN
	L-849 (L) REIL (UNI-DIRECTIONAL)
	CONDUIT & CABLE
	DUCT BANK
	DUCT BANK - BORED UNDER PAVEMENT
	FUTURE DUCT BANK

CIRCUIT SCHEDULE

SYM	CIRCUIT & CABLE	SIZE
A	RUNWAY 4-22 EDGE	#8, 5kV, TYPE C
B	TAXIWAY C2 EDGE	#8, 5kV, TYPE C
C	TAXIWAY C3 EDGE	#8, 5kV, TYPE C
D	PAPI RUNWAY 4	#8, 5kV, TYPE C
E	PAPI RUNWAY 22	#8, 5kV, TYPE C
F	REIL RUNWAY 4 POWER	#8, 5kV, TYPE C
G	REIL RUNWAY 4 CONTROL	#12, 600v, TYPE C
H	REIL RUNWAY 22 POWER	#8, 5kV, TYPE C
I	REIL RUNWAY 22 CONTROL	#12, 600v, TYPE C
J	WIND CONE RUNWAY 4	#8, 600v, TYPE C
K	WIND CONE RUNWAY 17-22	#10, 600v, TYPE C
LA	RUNWAY 13R-31L NORTH	#8, 5kV, TYPE C
LB	RUNWAY 13R-31L SOUTH	#8, 5kV, TYPE C
M	RUNWAY 13L-31R EDGE	#8, 5kV, TYPE C
N	TAXIWAY C4 EDGE	#8, 5kV, TYPE C
P	RUNWAY 17-35 EDGE	#8, 5kV, TYPE C
Q	TAXIWAY C5	#8, 5kV, TYPE C
R	TAXIWAY C6	#8, 5kV, TYPE C
S	REIL POWER RUNWAY 35	#8, 5kV, TYPE C
T	REIL CONTROL RUNWAY 35	#12, 600v, TYPE C
V	PAPI RUNWAY 35	#8, 5kV, TYPE C
X	REIL POWER RUNWAY 17	#8, 5kV, TYPE C
Y	REIL CONTROL RUNWAY 17	#12, 600v, TYPE C
Z	TAXIWAY C1	#8, 5kV, TYPE C
AA	TAXIWAY C4	#8, 5kV, TYPE C
BB	PAPI RUNWAY 17	#8, 5kV, TYPE C
CC	TAXIWAY C11	#8, 5kV, TYPE C
DD	WIND CONE RUNWAY 35	#10, 600v, TYPE C
EE	WIND CONE RUNWAY 13L	#10, 600v, TYPE C
FF	WIND CONE RUNWAY 31L	#10, 600v, TYPE C
GG	TAXIWAY C7	#8, 5kV, TYPE C
HH	TAXIWAY C8	#8, 5kV, TYPE C
II	TAXIWAY C9	#8, 5kV, TYPE C
JJ	TAXIWAY C10	#8, 5kV, TYPE C
KK	TAXIWAY C11	#8, 5kV, TYPE C
LL	TAXIWAY C12	#8, 5kV, TYPE C
MM	TAXIWAY C13	#8, 5kV, TYPE C
NN	TAXIWAY C14	#8, 5kV, TYPE C
PP	TAXIWAY C15	#8, 5kV, TYPE C
QQ	TAXIWAY C16	#8, 5kV, TYPE C
*	EMPTY CONDUIT	

TRENCH, CONDUIT & DUCT BANK LABEL LEGEND

TRENCH, CONDUIT, OR DUCT BANK SYMBOL — INDIVIDUAL CONDUITS

5 - 3 | 2A | 4B | 3D - #6g, 2C - #4g

NUMBER OF CONDUITS — GND WIRE SIZE — CIRCUIT CODE — NUMBER OF CABLES

SIGN/LIGHT COLOR LEGEND

- SEE SIGN SCHEDULE DETAIL, SHEET E701

CIRCUIT SCHEDULE NOTES:

* PROVIDE 1-#6, 600v, GREEN, XHHW, GROUND WIRE WITH EACH 5kV CIRCUIT IN A CONDUIT.

** PROVIDE SHIELDED TRIGGER CONTROL CABLE IF REQUIRED BY REIL MANUFACTURER.

TRENCH SCHEDULE

SYM	DESCRIPTION
1	EXISTING
2	2" PVC
3	2" PVC-CE
4	2" HDPE BORE

NOTE:
SPARE CONDUITS PROVIDED FOR FUTURE USE.

30 0 30 60
SCALE: 1"=30' FEET

SYM	DESCRIPTION	DATE	APPR
0	ISSUED FOR BID	8 JUN 15	

NAVFAC

STATE OF TEXAS — JON M. McCALMONT — 100633 — LICENSED PROFESSIONAL ENGINEER — 15 JUNE 2 — SEAL

leidos
LEIDOS ENGINEERING, LLC
ONE WEST 3RD ST.
TULSA, OK 74103

DELTA AIRPORT CONSULTANTS, INC.
9711 Farrar Court, Suite 100
Richmond, Virginia 23236
phone: (804) 275-8301 • fax: (804) 275-8371
www.deltaairport.com
Delta Project No. 14072 A/E INFO

APPROVED
FOR COMMANDER NAVFAC
ACTIVITY
SATISFACTORY TO DATE
DES EFC DRW MRM CHK MWK
PROJECT MANAGER
IPT TECH. BRANCH HEAD
CHIEF ENG/ARCH (CORE)

DEPARTMENT OF THE NAVY
NAVAL FACILITIES ENGINEERING COMMAND
CIBIL CORE
NAVAL FACILITIES ENGINEERING COMMAND SOUTHEAST
NAVAL AIR STATION JACKSONVILLE
NAS CORPUS CHRISTI
CORPUS CHRISTI, TEXAS
NAS CORPUS CHRISTI AIRFIELD REPAIRS
TAXIWAY 'E'
ELECTRICAL LAYOUT

SCALE: 1"=30"
EPROJECT NO.:
CONSTR. CONTR. NO.
NAVFAC DRAWING NO.
15095257
SHEET 129 OF 145
EA121

DRAWFORM REVISION: 5 APRIL 2012

FILE NAME: N:\14072\04 CAD_REPAIR_TWYE\1302443-E-EA121.dwg LAYOUT NAME: EA121 PLOTTED: Tuesday, June 09, 2015 - 10:13am USER: mrm

TRENCH, CONDUIT & DUCT BANK LABEL LEGEND

TRENCH, CONDUIT, OR DUCT BANK SYMBOL — INDIVIDUAL CONDUITS

5 - 3 | 2A | 4B | 3D - #6g, 2C - #4g

NUMBER OF CONDUITS — GND WIRE SIZE — CIRCUIT CODE — NUMBER OF CABLES

SIGN/LIGHT COLOR LEGEND

- SEE SIGN SCHEDULE DETAIL, SHEET E701

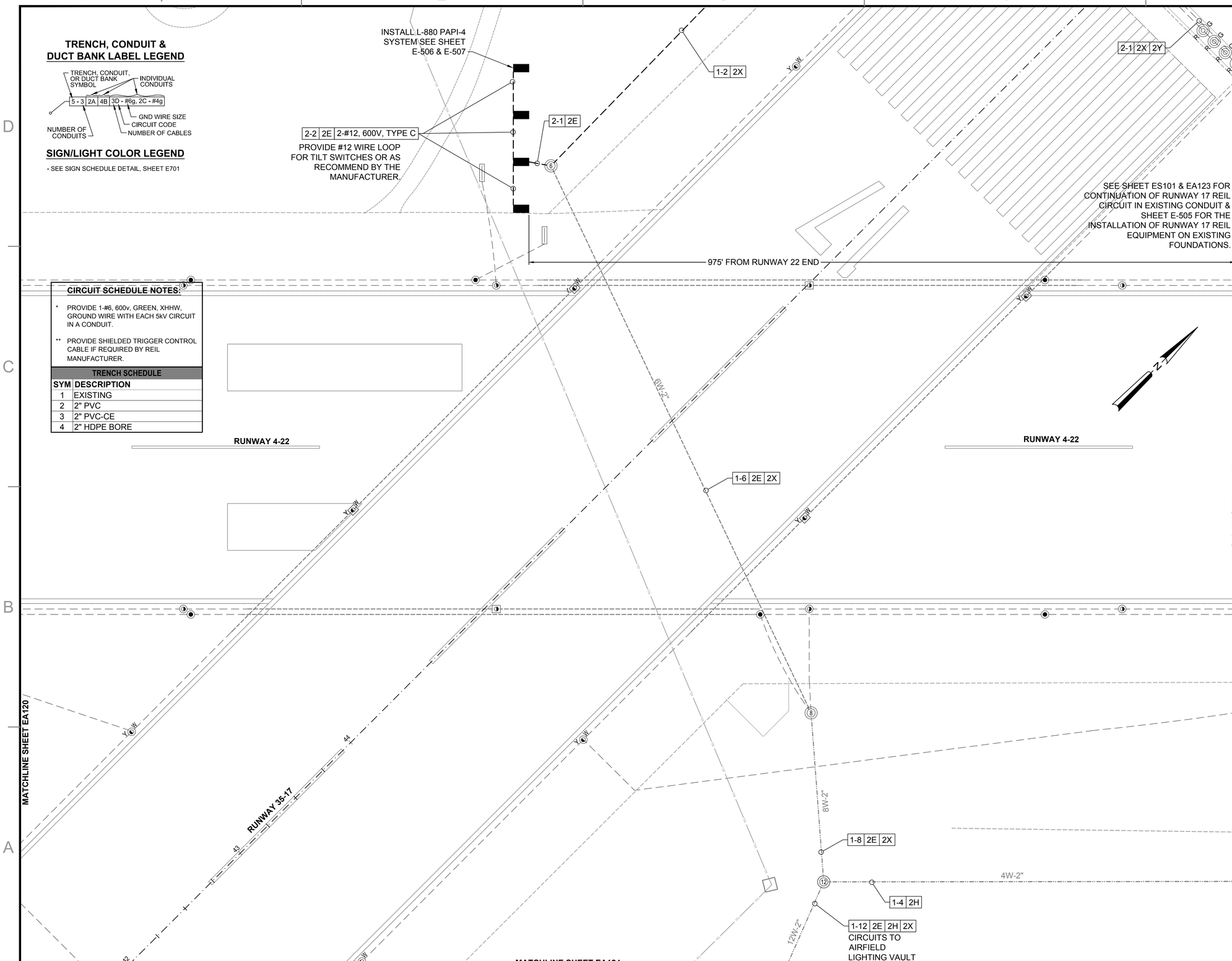

CIRCUIT SCHEDULE NOTES:

* PROVIDE 1-#6, 600v, GREEN, XHHW, GROUND WIRE WITH EACH 5kV CIRCUIT IN A CONDUIT.

** PROVIDE SHIELDED TRIGGER CONTROL CABLE IF REQUIRED BY REIL MANUFACTURER.

TRENCH SCHEDULE

SYM	DESCRIPTION
1	EXISTING
2	2" PVC
3	2" PVC-CE
4	2" HDPE BORE

KEY MAP

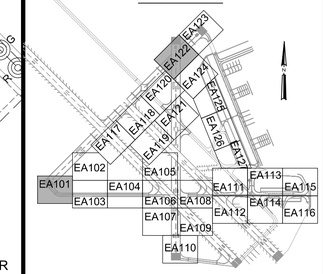

ELECTRICAL SYMBOL LEGEND

SYMBOL STATUS

EXISTING | REMOVE | INSTALL | REPLACE | ADJUST

SYMBOL	DESCRIPTION
	L-858 (L) AIRFIELD GUIDANCE SIGN
	L-861T (L) BASE MOUNTED MITL
	L-852T(L) IN-PAVEMENT MITL
R G	L-862E (L) BASE MOUNTED THRESHOLD LIGHT
#	L-867 ELECTRICAL PULLCAN (# INDICATES NUMBER OF CANS)
P	FUTURE L-867 ELECTRICAL PULLCAN
	L-849 (L) REIL (UNI-DIRECTIONAL)
	CONDUIT & CABLE
	DUCT BANK
	DUCT BANK - BORED UNDER PAVEMENT
	FUTURE DUCT BANK

CIRCUIT SCHEDULE

SYM	CIRCUIT & CABLE	SIZE
A	RUNWAY 4-22 EDGE	#8, 5kV, TYPE C
B	TAXIWAY C2 EDGE	#8, 5kV, TYPE C
C	TAXIWAY C3 EDGE	#8, 5kV, TYPE C
D	PAPI RUNWAY 4	#8, 5kV, TYPE C
E	PAPI RUNWAY 22	#8, 5kV, TYPE C
F	REIL RUNWAY 4 POWER	#8, 5kV, TYPE C
G	REIL RUNWAY 4 CONTROL	#12, 600v, TYPE C
H	REIL RUNWAY 22 POWER	#8, 5kV, TYPE C
I	REIL RUNWAY 22 CONTROL	#12, 600v, TYPE C
J	WIND CONE RUNWAY 4	#8, 600v, TYPE C
K	WIND CONE RUNWAY 17-22	#10, 600v, TYPE C
LA	RUNWAY 13R-31L NORTH	#8, 5kV, TYPE C
LB	RUNWAY 13R-31L SOUTH	#8, 5kV, TYPE C
M	RUNWAY 13L-31R EDGE	#8, 5kV, TYPE C
N	TAXIWAY C4 EDGE	#8, 5kV, TYPE C
P	RUNWAY 17-35 EDGE	#8, 5kV, TYPE C
Q	TAXIWAY C5	#8, 5kV, TYPE C
R	TAXIWAY C6	#8, 5kV, TYPE C
S	REIL POWER RUNWAY 35	#8, 5kV, TYPE C
T	REIL CONTROL RUNWAY 35	#12, 600v, TYPE C
V	PAPI RUNWAY 35	#8, 5kV, TYPE C
X	REIL POWER RUNWAY 17	#8, 5kV, TYPE C
Y	REIL CONTROL RUNWAY 17	#12, 600v, TYPE C
Z	TAXIWAY C1	#8, 5kV, TYPE C
AA	TAXIWAY C4	#8, 5kV, TYPE C
BB	PAPI RUNWAY 17	#8, 5kV, TYPE C
CC	TAXIWAY C11	#8, 5kV, TYPE C
DD	WIND CONE RUNWAY 35	#10, 600v, TYPE C
EE	WIND CONE RUNWAY 13L	#10, 600v, TYPE C
FF	WIND CONE RUNWAY 31L	#10, 600v, TYPE C
GG	TAXIWAY C7	#8, 5kV, TYPE C
HH	TAXIWAY C8	#8, 5kV, TYPE C
II	TAXIWAY C9	#8, 5kV, TYPE C
JJ	TAXIWAY C10	#8, 5kV, TYPE C
KK	TAXIWAY C11	#8, 5kV, TYPE C
LL	TAXIWAY C12	#8, 5kV, TYPE C
MM	TAXIWAY C13	#8, 5kV, TYPE C
NN	TAXIWAY C14	#8, 5kV, TYPE C
PP	TAXIWAY C15	#8, 5kV, TYPE C
QQ	TAXIWAY C16	#8, 5kV, TYPE C
*	EMPTY CONDUIT	

NOTE:
SPARE CONDUITS PROVIDED FOR FUTURE USE.

30 0 30 60
SCALE: 1"=30' FEET

SYM	DESCRIPTION	DATE	APPR
0	ISSUED FOR BID	8 JUN 15	

NAVFAC

STATE OF TEXAS — JON M. McCALMONT — 100633 — LICENSED PROFESSIONAL ENGINEER — 15 JUNE 3 — SEAL

leidos
LEIDOS ENGINEERING, LLC
ONE WEST 3RD ST.
TULSA, OK 74103

DELTA AIRPORT CONSULTANTS, INC.
9711 Farror Court, Suite 100
Richmond, Virginia 23236
phone: (804) 275-8301 • fax: (804) 275-8371
www.deltaairport.com
Delta Project No. 14072 A/E INFO

APPROVED
FOR COMMANDER NAVFAC
ACTIVITY
SATISFACTORY TO DATE
DES EFC | DRW MRM | CHK MWK
PROJECT MANAGER
IPT TECH. BRANCH HEAD
CHIEF ENG/ARCH (CORE)

DEPARTMENT OF THE NAVY
NAVAL FACILITIES ENGINEERING COMMAND
CIBL CORE:
NAVAL FACILITIES ENGINEERING COMMAND SOUTHEAST
NAVAL AIR STATION JACKSONVILLE
NAS CORPUS CHRISTI
CORPUS CHRISTI, TEXAS

NAS CORPUS CHRISTI AIRFIELD REPAIRS
TAXIWAY 'E'
ELECTRICAL LAYOUT

SCALE: 1"=30'
EPROJECT NO.:
CONSTR. CONTR. NO.
NAVFAC DRAWING NO. 15095258
SHEET 130 OF 145

EA122

DRAWFORM REVISION: 5 APRIL 2012

FILE NAME: N:\14072\04 CAD_REPAIR_TWYE\1302443-E-EA122.dwg LAYOUT NAME: EA122 PLOTTED: Tuesday, June 09, 2015 - 10:14am USER: mrm

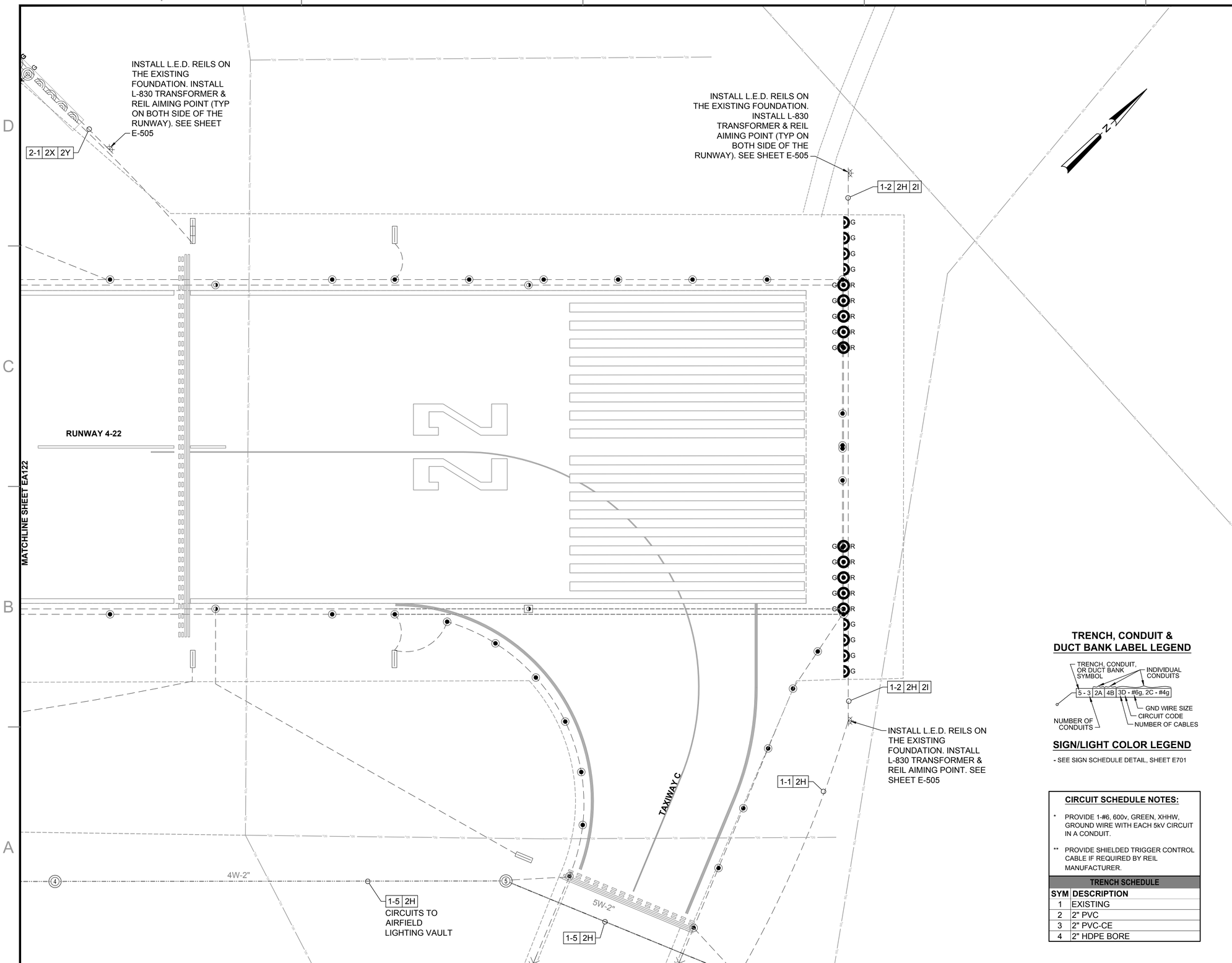

KEY MAP

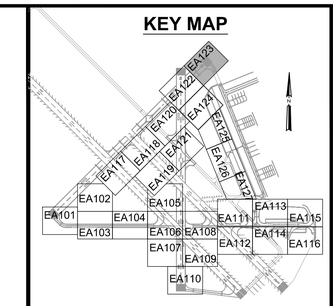

ELECTRICAL SYMBOL LEGEND

SYMBOL STATUS

EXISTING | REMOVE | INSTALL | REPLACE | ADJUST

SYMBOL	DESCRIPTION
	L-858 (L) AIRFIELD GUIDANCE SIGN
	L-861T (L) BASE MOUNTED MITL
	L-852T(L) IN-PAVEMENT MITL
R G	L-862E (L) BASE MOUNTED THRESHOLD LIGHT
#	L-867 ELECTRICAL PULLCAN (# INDICATES NUMBER OF CANS)
P	FUTURE L-867 ELECTRICAL PULLCAN
	L-849 (L) REIL (UNI-DIRECTIONAL)
	CONDUIT & CABLE
	DUCT BANK
	DUCT BANK - BORED UNDER PAVEMENT
	FUTURE DUCT BANK

CIRCUIT SCHEDULE

SYM	CIRCUIT & CABLE	SIZE
A	RUNWAY 4-22 EDGE	#8, 5kV, TYPE C
B	TAXIWAY C2 EDGE	#8, 5kV, TYPE C
C	TAXIWAY C3 EDGE	#8, 5kV, TYPE C
D	PAPI RUNWAY 4	#8, 5kV, TYPE C
E	PAPI RUNWAY 22	#8, 5kV, TYPE C
F	REIL RUNWAY 4 POWER	#8, 5kV, TYPE C
G	REIL RUNWAY 4 CONTROL	#12, 600v, TYPE C
H	REIL RUNWAY 22 POWER	#8, 5kV, TYPE C
I	REIL RUNWAY 22 CONTROL	#12, 600v, TYPE C
J	WIND CONE RUNWAY 4	#8, 600v, TYPE C
K	WIND CONE RUNWAY 17-22	#10, 600v, TYPE C
LA	RUNWAY 13R-31L NORTH	#8, 5kV, TYPE C
LB	RUNWAY 13R-31L SOUTH	#8, 5kV, TYPE C
M	RUNWAY 13L-31R EDGE	#8, 5kV, TYPE C
N	TAXIWAY C4 EDGE	#8, 5kV, TYPE C
P	RUNWAY 17-35 EDGE	#8, 5kV, TYPE C
Q	TAXIWAY C5	#8, 5kV, TYPE C
R	TAXIWAY C6	#8, 5kV, TYPE C
S	REIL POWER RUNWAY 35	#8, 5kV, TYPE C
T	REIL CONTROL RUNWAY 35	#12, 600v, TYPE C
V	PAPI RUNWAY 35	#8, 5kV, TYPE C
X	REIL POWER RUNWAY 17	#8, 5kV, TYPE C
Y	REIL CONTROL RUNWAY 17	#12, 600v, TYPE C
Z	TAXIWAY C1	#8, 5kV, TYPE C
AA	TAXIWAY C4	#8, 5kV, TYPE C
BB	PAPI RUNWAY 17	#8, 5kV, TYPE C
CC	TAXIWAY C11	#8, 5kV, TYPE C
DD	WIND CONE RUNWAY 35	#10, 600v, TYPE C
EE	WIND CONE RUNWAY 13L	#10, 600v, TYPE C
FF	WIND CONE RUNWAY 31L	#10, 600v, TYPE C
GG	TAXIWAY C7	#8, 5kV, TYPE C
HH	TAXIWAY C8	#8, 5kV, TYPE C
II	TAXIWAY C9	#8, 5kV, TYPE C
JJ	TAXIWAY C10	#8, 5kV, TYPE C
KK	TAXIWAY C11	#8, 5kV, TYPE C
LL	TAXIWAY C12	#8, 5kV, TYPE C
MM	TAXIWAY C13	#8, 5kV, TYPE C
NN	TAXIWAY C14	#8, 5kV, TYPE C
PP	TAXIWAY C15	#8, 5kV, TYPE C
QQ	TAXIWAY C16	#8, 5kV, TYPE C
*	EMPTY CONDUIT	

TRENCH, CONDUIT & DUCT BANK LABEL LEGEND

SIGN/LIGHT COLOR LEGEND

- SEE SIGN SCHEDULE DETAIL, SHEET E701

CIRCUIT SCHEDULE NOTES:

* PROVIDE 1-#6, 600v, GREEN, XHHW, GROUND WIRE WITH EACH 5kV CIRCUIT IN A CONDUIT.

** PROVIDE SHIELDED TRIGGER CONTROL CABLE IF REQUIRED BY REIL MANUFACTURER.

TRENCH SCHEDULE

SYM	DESCRIPTION
1	EXISTING
2	2" PVC
3	2" PVC-CE
4	2" HDPE BORE

NOTE:
SPARE CONDUITS PROVIDED FOR FUTURE USE.

30 0 30 60
SCALE: 1"=30' FEET

SYM	DESCRIPTION	DATE	APPR
0	ISSUED FOR BID	8 JUN 15	

NAVFAC

STATE OF TEXAS
JON M. McCALMONT
100633
LICENSED PROFESSIONAL ENGINEER
15 JUNE 2
SEAL

leidos
LEIDOS ENGINEERING, LLC
ONE WEST 3RD ST.
TULSA, OK 74103

DELTA AIRPORT CONSULTANTS, INC.
9711 Farrar Court, Suite 100
Richmond, Virginia 23236
phone: (804) 275-8301 • fax: (804) 275-8371
www.deltaairport.com
Delta Project No. 14072 A/E INFO

APPROVED
FOR COMMANDER NAVFAC
ACTIVITY
SATISFACTORY TO DATE
DES EFC DRW MRM CHK MWK
PROJECT MANAGER
IPT TECH. BRANCH HEAD
CHIEF ENG/ARCH (CORE)

DEPARTMENT OF THE NAVY
NAVAL FACILITIES ENGINEERING COMMAND
CIBL CORE
NAVAL FACILITIES ENGINEERING COMMAND SOUTHEAST
NAVAL AIR STATION JACKSONVILLE
NAS CORPUS CHRISTI
CORPUS CHRISTI, TEXAS
NAS CORPUS CHRISTI AIRFIELD REPAIRS
TAXIWAY 'E'
ELECTRICAL LAYOUT

SCALE: 1"=30"
EPROJECT NO.:
CONSTR. CONTR. NO.
NAVFAC DRAWING NO.
15095259
SHEET 131 OF 145
EA123

DRAWFORM REVISION: 5 APRIL 2012

FILE NAME: N:\140720\04 CAD_REPAIR_TWYE\1302443-E-EA123.dwg LAYOUT NAME: EA123 PLOTTED: Tuesday, June 09, 2015 - 10:14am USER: mrm

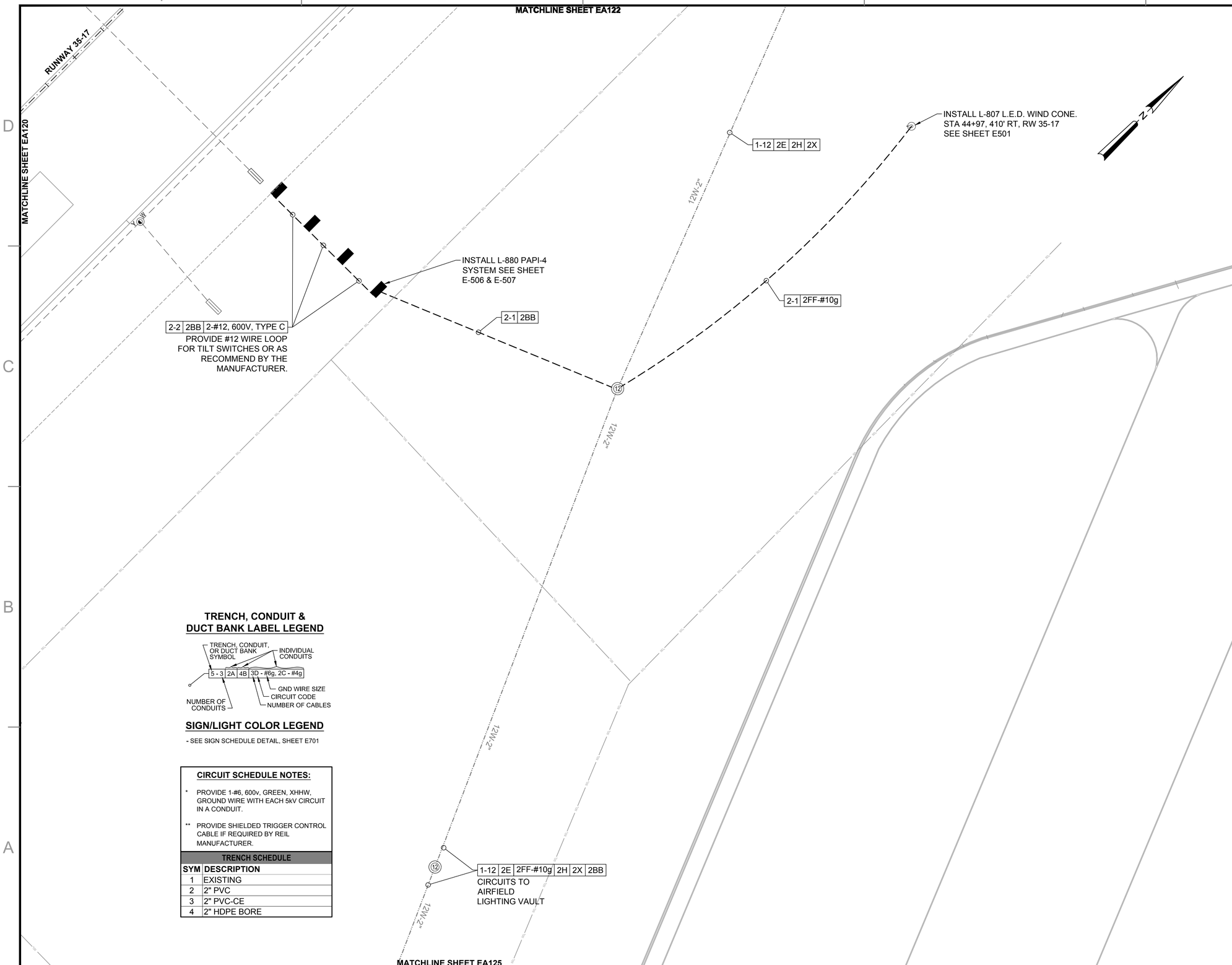

TRENCH, CONDUIT & DUCT BANK LABEL LEGEND

SIGN/LIGHT COLOR LEGEND

- SEE SIGN SCHEDULE DETAIL, SHEET E701

CIRCUIT SCHEDULE NOTES:

* PROVIDE 1-#6, 600v, GREEN, XHHW, GROUND WIRE WITH EACH 5kV CIRCUIT IN A CONDUIT.

** PROVIDE SHIELDED TRIGGER CONTROL CABLE IF REQUIRED BY REIL MANUFACTURER.

TRENCH SCHEDULE

SYM	DESCRIPTION
1	EXISTING
2	2" PVC
3	2" PVC-CE
4	2" HDPE BORE

KEY MAP

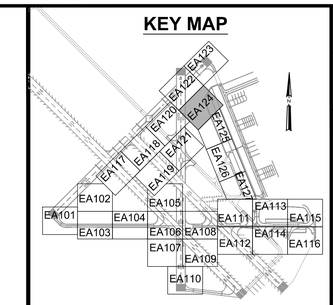

ELECTRICAL SYMBOL LEGEND

SYMBOL STATUS

EXISTING | REMOVE | INSTALL | REPLACE (R) | ADJUST (A)

SYMBOL	DESCRIPTION
	L-858 (L) AIRFIELD GUIDANCE SIGN
	L-861T (L) BASE MOUNTED MITL
	L-852T(L) IN-PAVEMENT MITL
R G	L-862E (L) BASE MOUNTED THRESHOLD LIGHT
#	L-867 ELECTRICAL PULLCAN (# INDICATES NUMBER OF CANS)
P	FUTURE L-867 ELECTRICAL PULLCAN
	L-849 (L) REIL (UNI-DIRECTIONAL)
	CONDUIT & CABLE
	DUCT BANK
	DUCT BANK - BORED UNDER PAVEMENT
	FUTURE DUCT BANK

CIRCUIT SCHEDULE

SYM	CIRCUIT & CABLE	SIZE
A	RUNWAY 4-22 EDGE	#8, 5kV, TYPE C
B	TAXIWAY C2 EDGE	#8, 5kV, TYPE C
C	TAXIWAY C3 EDGE	#8, 5kV, TYPE C
D	PAPI RUNWAY 4	#8, 5kV, TYPE C
E	PAPI RUNWAY 22	#8, 5kV, TYPE C
F	REIL RUNWAY 4 POWER	#8, 5kV, TYPE C
G	REIL RUNWAY 4 CONTROL	#12, 600v, TYPE C
H	REIL RUNWAY 22 POWER	#8, 5kV, TYPE C
I	REIL RUNWAY 22 CONTROL	#12, 600v, TYPE C
J	WIND CONE RUNWAY 4	#8, 600v, TYPE C
K	WIND CONE RUNWAY 17-22	#10, 600v, TYPE C
LA	RUNWAY 13R-31L NORTH	#8, 5kV, TYPE C
LB	RUNWAY 13R-31L SOUTH	#8, 5kV, TYPE C
M	RUNWAY 13L-31R EDGE	#8, 5kV, TYPE C
N	TAXIWAY C4 EDGE	#8, 5kV, TYPE C
P	RUNWAY 17-35 EDGE	#8, 5kV, TYPE C
Q	TAXIWAY C5	#8, 5kV, TYPE C
R	TAXIWAY C6	#8, 5kV, TYPE C
S	REIL POWER RUNWAY 35	#8, 5kV, TYPE C
T	REIL CONTROL RUNWAY 35	#12, 600v, TYPE C
V	PAPI RUNWAY 35	#8, 5kV, TYPE C
X	REIL POWER RUNWAY 17	#8, 5kV, TYPE C
Y	REIL CONTROL RUNWAY 17	#12, 600v, TYPE C
Z	TAXIWAY C1	#8, 5kV, TYPE C
AA	TAXIWAY C4	#8, 5kV, TYPE C
BB	PAPI RUNWAY 17	#8, 5kV, TYPE C
CC	TAXIWAY C11	#8, 5kV, TYPE C
DD	WIND CONE RUNWAY 35	#10, 600v, TYPE C
EE	WIND CONE RUNWAY 13L	#10, 600v, TYPE C
FF	WIND CONE RUNWAY 31L	#10, 600v, TYPE C
GG	TAXIWAY C7	#8, 5kV, TYPE C
HH	TAXIWAY C8	#8, 5kV, TYPE C
II	TAXIWAY C9	#8, 5kV, TYPE C
JJ	TAXIWAY C10	#8, 5kV, TYPE C
KK	TAXIWAY C11	#8, 5kV, TYPE C
LL	TAXIWAY C12	#8, 5kV, TYPE C
MM	TAXIWAY C13	#8, 5kV, TYPE C
NN	TAXIWAY C14	#8, 5kV, TYPE C
PP	TAXIWAY C15	#8, 5kV, TYPE C
QQ	TAXIWAY C16	#8, 5kV, TYPE C
*	EMPTY CONDUIT	

NOTE:
SPARE CONDUITS PROVIDED FOR FUTURE USE.

30 0 30 60
SCALE: 1"=30' FEET

SYM	DESCRIPTION	DATE	APPR
0	ISSUED FOR BID	8 JUN 15	

NAVFAC

STATE OF TEXAS
JON M. McCALMONT
100633
LICENSED PROFESSIONAL ENGINEER
15 JUN 15
SEAL

leidos
LEIDOS ENGINEERING, LLC
ONE WEST 3RD ST.
TULSA, OK 74103

DELTA AIRPORT CONSULTANTS, INC.
9711 Farrar Court, Suite 100
Richmond, Virginia 23236
phone: (804) 275-8301 • fax: (804) 275-8371
www.deltaairport.com
Delta Project No. 14072 A/E INFO

APPROVED
FOR COMMANDER NAVFAC
ACTIVITY
SATISFACTORY TO DATE
DES EFC DRW MRM CHK MWK
PROJECT MANAGER
IPT TECH. BRANCH HEAD
CHIEF ENG/ARCH (CORE)

DEPARTMENT OF THE NAVY
NAVAL FACILITIES ENGINEERING COMMAND
CIBL CORE
NAVAL FACILITIES ENGINEERING COMMAND SOUTHEAST
NAVAL AIR STATION JACKSONVILLE
NAS CORPUS CHRISTI
CORPUS CHRISTI, TEXAS
NAS CORPUS CHRISTI AIRFIELD REPAIRS
TAXIWAY 'E'
ELECTRICAL LAYOUT

SCALE: 1"=30"
EPROJECT NO.:
CONSTR. CONTR. NO.
NAVFAC DRAWING NO.
15095260
SHEET 132 OF 145
EA124
DRAWFORM REVISION: 5 APRIL 2012

FILE NAME: N:\14072\04 CAD_REPAIR_TWYE\1302443-E-EA124.dwg LAYOUT NAME: EA124 PLOTTED: Tuesday, June 09, 2015 - 10:14am USER: mrm

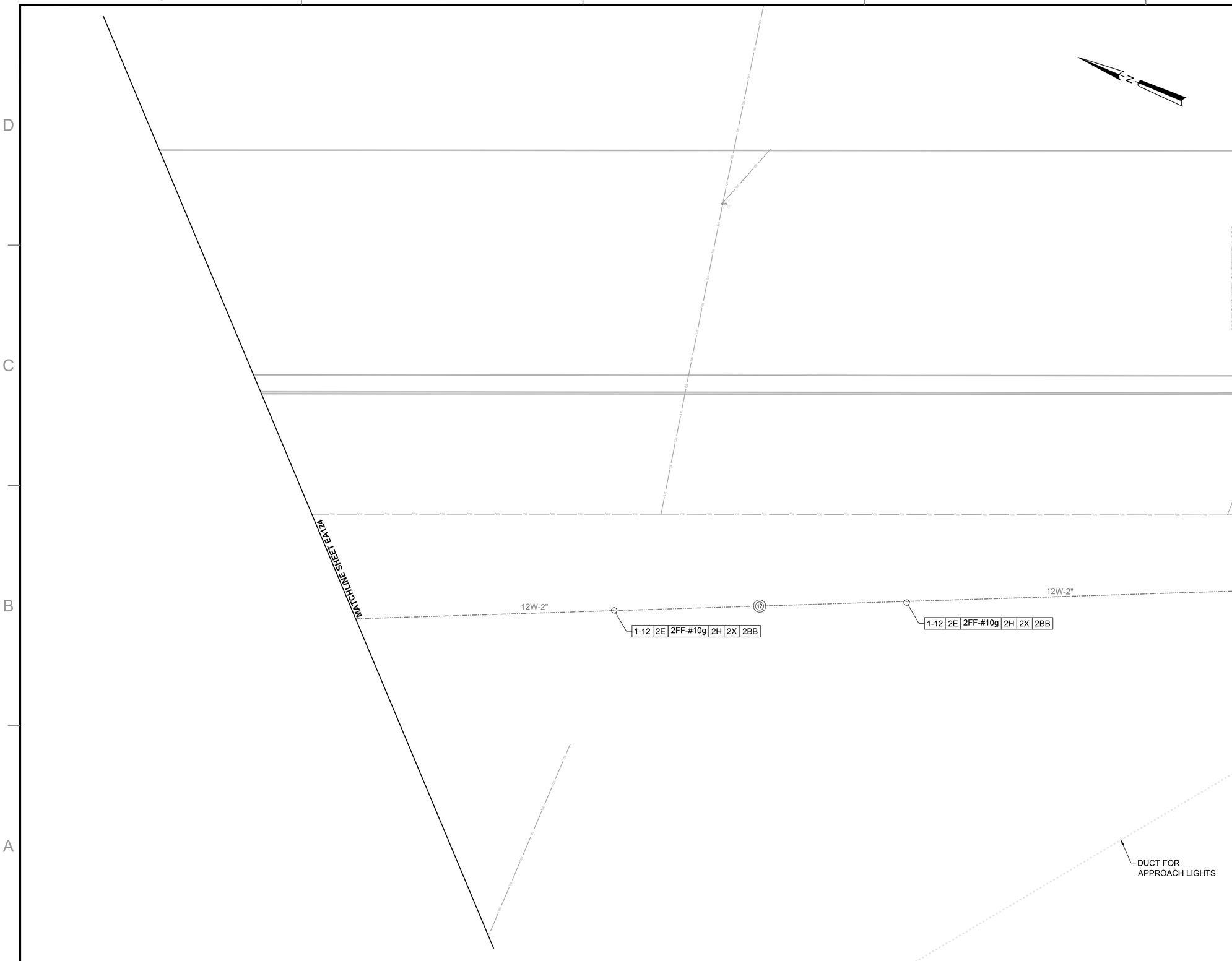

KEY MAP

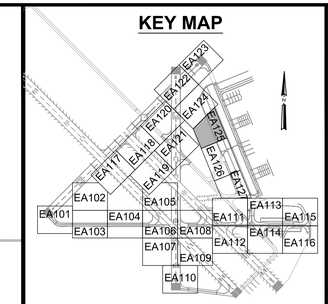

ELECTRICAL SYMBOL LEGEND

SYMBOL STATUS

EXISTING	REMOVE	INSTALL	REPLACE	ADJUST
	X		R	A

SYMBOL	DESCRIPTION
	L-858 (L) AIRFIELD GUIDANCE SIGN
	L-861T (L) BASE MOUNTED MITL
	L-852T(L) IN-PAVEMENT MITL
R G	L-862E (L) BASE MOUNTED THRESHOLD LIGHT
#	L-867 ELECTRICAL PULLCAN (# INDICATES NUMBER OF CANS)
P	FUTURE L-867 ELECTRICAL PULLCAN
	L-849 (L) REIL (UNI-DIRECTIONAL)
	CONDUIT & CABLE
	DUCT BANK
	DUCT BANK - BORED UNDER PAVEMENT
	FUTURE DUCT BANK

CIRCUIT SCHEDULE

SYM	CIRCUIT & CABLE	SIZE
A	RUNWAY 4-22 EDGE	#8, 5kV, TYPE C
B	TAXIWAY C2 EDGE	#8, 5kV, TYPE C
C	TAXIWAY C3 EDGE	#8, 5kV, TYPE C
D	PAPI RUNWAY 4	#8, 5kV, TYPE C
E	PAPI RUNWAY 22	#8, 5kV, TYPE C
F	REIL RUNWAY 4 POWER	#8, 5kV, TYPE C
G	REIL RUNWAY 4 CONTROL	#12, 600v, TYPE C
H	REIL RUNWAY 22 POWER	#8, 5kV, TYPE C
I	REIL RUNWAY 22 CONTROL	#12, 600v, TYPE C
J	WIND CONE RUNWAY 4	#8, 600v, TYPE C
K	WIND CONE RUNWAY 17-22	#10, 600v, TYPE C
LA	RUNWAY 13R-31L NORTH	#8, 5kV, TYPE C
LB	RUNWAY 13R-31L SOUTH	#8, 5kV, TYPE C
M	RUNWAY 13L-31R EDGE	#8, 5kV, TYPE C
N	TAXIWAY C4 EDGE	#8, 5kV, TYPE C
P	RUNWAY 17-35 EDGE	#8, 5kV, TYPE C
Q	TAXIWAY C5	#8, 5kV, TYPE C
R	TAXIWAY C6	#8, 5kV, TYPE C
S	REIL POWER RUNWAY 35	#8, 5kV, TYPE C
T	REIL CONTROL RUNWAY 35	#12, 600v, TYPE C
V	PAPI RUNWAY 35	#8, 5kV, TYPE C
X	REIL POWER RUNWAY 17	#8, 5kV, TYPE C
Y	REIL CONTROL RUNWAY 17	#12, 600v, TYPE C
Z	TAXIWAY C1	#8, 5kV, TYPE C
AA	TAXIWAY C4	#8, 5kV, TYPE C
BB	PAPI RUNWAY 17	#8, 5kV, TYPE C
CC	TAXIWAY C11	#8, 5kV, TYPE C
DD	WIND CONE RUNWAY 35	#10, 600v, TYPE C
EE	WIND CONE RUNWAY 13L	#10, 600v, TYPE C
FF	WIND CONE RUNWAY 31L	#10, 600v, TYPE C
GG	TAXIWAY C7	#8, 5kV, TYPE C
HH	TAXIWAY C8	#8, 5kV, TYPE C
II	TAXIWAY C9	#8, 5kV, TYPE C
JJ	TAXIWAY C10	#8, 5kV, TYPE C
KK	TAXIWAY C11	#8, 5kV, TYPE C
LL	TAXIWAY C12	#8, 5kV, TYPE C
MM	TAXIWAY C13	#8, 5kV, TYPE C
NN	TAXIWAY C14	#8, 5kV, TYPE C
PP	TAXIWAY C15	#8, 5kV, TYPE C
QQ	TAXIWAY C16	#8, 5kV, TYPE C
*	EMPTY CONDUIT	

NOTE:
SPARE CONDUITS PROVIDED FOR FUTURE USE.

30 0 30 60
SCALE: 1"=30' FEET

SYM	DESCRIPTION	DATE	APPR
0	ISSUED FOR BID	8 JUN 15	

NAVFAC

STATE OF TEXAS
JON M. McCALMONT
100633
LICENSED PROFESSIONAL ENGINEER
8 JUN 15
SEAL

leidos
LEIDOS ENGINEERING, LLC
ONE WEST 3RD ST.
TULSA, OK 74103

DELTA AIRPORT CONSULTANTS, INC.
9711 Farrar Court, Suite 100
Richmond, Virginia 23236
phone: (804) 275-8301 • fax: (804) 275-8371
www.deltaairport.com
Delta Project No. 14072 A/E INFO

APPROVED
FOR COMMANDER NAVFAC
ACTIVITY
SATISFACTORY TO DATE
DES EFC DRW MRM CHK MWK
PROJECT MANAGER
IPT TECH. BRANCH HEAD
CHIEF ENG/ARCH (CORE)

DEPARTMENT OF THE NAVY
NAVAL FACILITIES ENGINEERING COMMAND
CIBL CORE
NAVAL FACILITIES ENGINEERING COMMAND SOUTHEAST
NAS CORPUS CHRISTI
NAVAL AIR STATION JACKSONVILLE
CORPUS CHRISTI, TEXAS
NAS CORPUS CHRISTI AIRFIELD REPAIRS
TAXIWAY 'E'
ELECTRICAL LAYOUT

SCALE: 1"=30"
EPROJECT NO.:
CONSTR. CONTR. NO.
NAVFAC DRAWING NO.
15095261
SHEET 133 OF 145
EA125

DRAWFORM REVISION: 5 APRIL 2012

FILE NAME: N:\14072\04 CAD_REPAIR_TWY\E\320443-E-EA125.dwg LAYOUT NAME: EA125 PLOTTED: Tuesday, June 09, 2015 - 10:15am USER: mrm

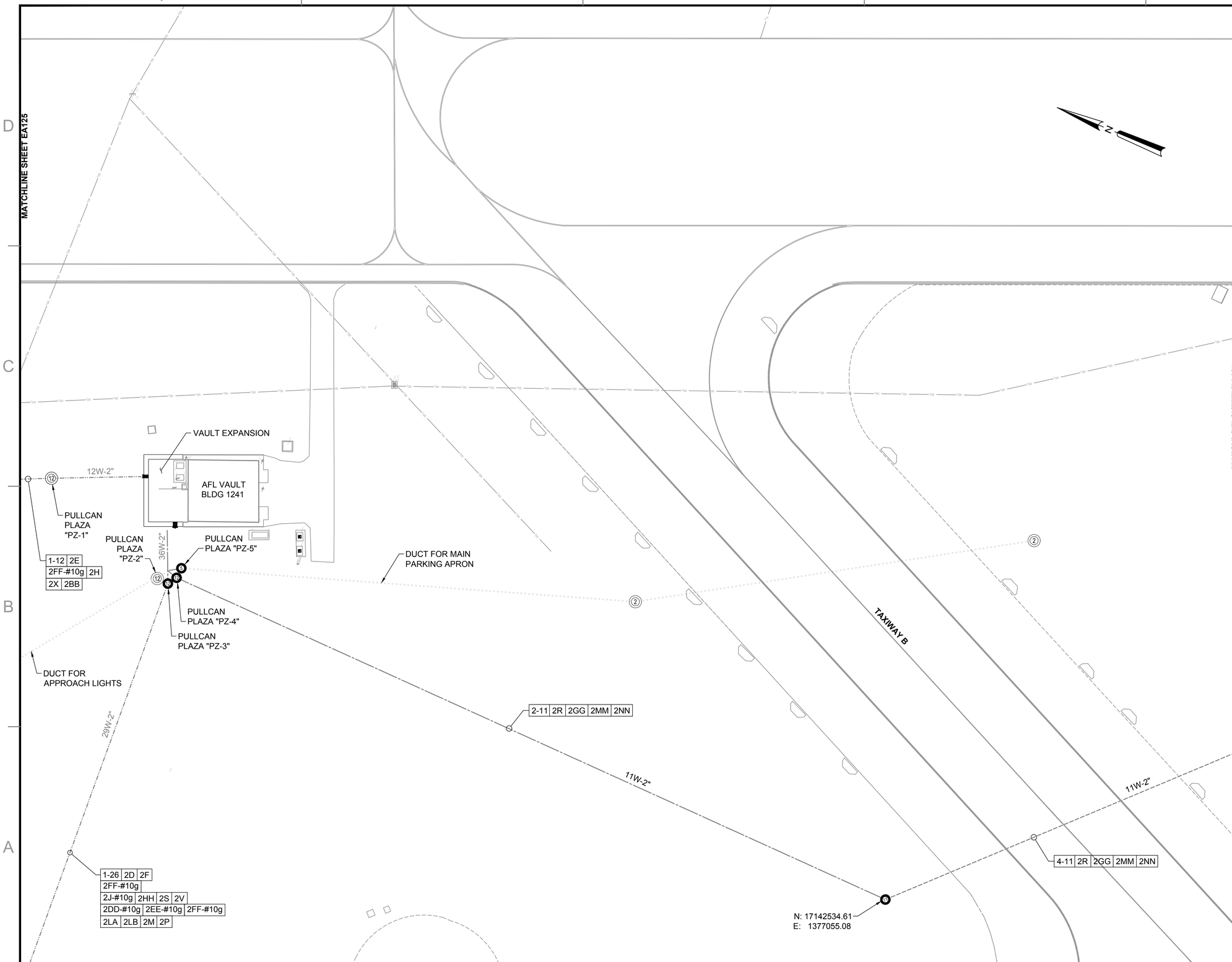

KEY MAP

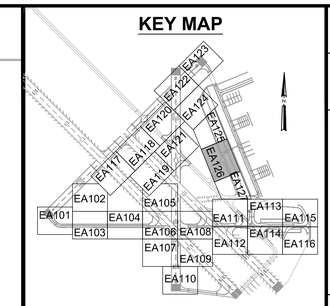

ELECTRICAL SYMBOL LEGEND

SYMBOL STATUS

EXISTING | REMOVE | INSTALL | REPLACE (R) | ADJUST (A)

SYMBOL	DESCRIPTION
	L-858 (L) AIRFIELD GUIDANCE SIGN
	L-861T (L) BASE MOUNTED MITL
	L-852T(L) IN-PAVEMENT MITL
R G	L-862E (L) BASE MOUNTED THRESHOLD LIGHT
#	L-867 ELECTRICAL PULLCAN (# INDICATES NUMBER OF CANS)
P	FUTURE L-867 ELECTRICAL PULLCAN
	L-849 (L) REIL (UNI-DIRECTIONAL)
	CONDUIT & CABLE
	DUCT BANK
	DUCT BANK - BORED UNDER PAVEMENT
	FUTURE DUCT BANK

CIRCUIT SCHEDULE

SYM	CIRCUIT & CABLE	SIZE
A	RUNWAY 4-22 EDGE	#8, 5kV, TYPE C
B	TAXIWAY C2 EDGE	#8, 5kV, TYPE C
C	TAXIWAY C3 EDGE	#8, 5kV, TYPE C
D	PAPI RUNWAY 4	#8, 5kV, TYPE C
E	PAPI RUNWAY 22	#8, 5kV, TYPE C
F	REIL RUNWAY 4 POWER	#8, 5kV, TYPE C
G	REIL RUNWAY 4 CONTROL	#12, 600v, TYPE C
H	REIL RUNWAY 22 POWER	#8, 5kV, TYPE C
I	REIL RUNWAY 22 CONTROL	#12, 600v, TYPE C
J	WIND CONE RUNWAY 4	#8, 600v, TYPE C
K	WIND CONE RUNWAY 17-22	#10, 600v, TYPE C
LA	RUNWAY 13R-31L NORTH	#8, 5kV, TYPE C
LB	RUNWAY 13R-31L SOUTH	#8, 5kV, TYPE C
M	RUNWAY 13L-31R EDGE	#8, 5kV, TYPE C
N	TAXIWAY C4 EDGE	#8, 5kV, TYPE C
P	RUNWAY 17-35 EDGE	#8, 5kV, TYPE C
Q	TAXIWAY C5	#8, 5kV, TYPE C
R	TAXIWAY C6	#8, 5kV, TYPE C
S	REIL POWER RUNWAY 35	#8, 5kV, TYPE C
T	REIL CONTROL RUNWAY 35	#12, 600v, TYPE C
V	PAPI RUNWAY 35	#8, 5kV, TYPE C
X	REIL POWER RUNWAY 17	#8, 5kV, TYPE C
Y	REIL CONTROL RUNWAY 17	#12, 600v, TYPE C
Z	TAXIWAY C1	#8, 5kV, TYPE C
AA	TAXIWAY C4	#8, 5kV, TYPE C
BB	PAPI RUNWAY 17	#8, 5kV, TYPE C
CC	TAXIWAY C11	#8, 5kV, TYPE C
DD	WIND CONE RUNWAY 35	#10, 600v, TYPE C
EE	WIND CONE RUNWAY 13L	#10, 600v, TYPE C
FF	WIND CONE RUNWAY 31L	#10, 600v, TYPE C
GG	TAXIWAY C7	#8, 5kV, TYPE C
HH	TAXIWAY C8	#8, 5kV, TYPE C
II	TAXIWAY C9	#8, 5kV, TYPE C
JJ	TAXIWAY C10	#8, 5kV, TYPE C
KK	TAXIWAY C11	#8, 5kV, TYPE C
LL	TAXIWAY C12	#8, 5kV, TYPE C
MM	TAXIWAY C13	#8, 5kV, TYPE C
NN	TAXIWAY C14	#8, 5kV, TYPE C
PP	TAXIWAY C15	#8, 5kV, TYPE C
QQ	TAXIWAY C16	#8, 5kV, TYPE C
*	EMPTY CONDUIT	

NOTE:
SPARE CONDUITS PROVIDED FOR FUTURE USE.

30 0 30 60
SCALE: 1"=30' FEET

SYM	DESCRIPTION	DATE	APPR
0	ISSUED FOR BID	8 JUN 15	

NAVFAC

STATE OF TEXAS
JON M. McCALMONT
100633
LICENSED PROFESSIONAL ENGINEER
8 JUN 15
SEAL

leidos
LEIDOS ENGINEERING, LLC
ONE WEST 3RD ST.
TULSA, OK 74103

DELTA AIRPORT CONSULTANTS, INC.
9711 Farrar Court, Suite 100
Richmond, Virginia 23236
phone: (804) 275-8301 • fax: (804) 275-8371
www.deltaairport.com
Delta Project No. 14072 A/E INFO

APPROVED
FOR COMMANDER NAVFAC
ACTIVITY
SATISFACTORY TO DATE
DES EFC DRW MRM CHK MWK
PROJECT MANAGER
IPT TECH. BRANCH HEAD
CHIEF ENG/ARCH (CORE)

DEPARTMENT OF THE NAVY
NAVAL FACILITIES ENGINEERING COMMAND
CIBIL CORE:
NAVAL FACILITIES ENGINEERING COMMAND SOUTHEAST
NAVAL AIR STATION JACKSONVILLE
NAS CORPUS CHRISTI
CORPUS CHRISTI, TEXAS
NAS CORPUS CHRISTI AIRFIELD REPAIRS
TAXIWAY 'E'
ELECTRICAL LAYOUT

SCALE: 1"=30"
EPROJECT NO.:
CONSTR. CONTR. NO.
NAVFAC DRAWING NO.
15095262
SHEET 134 OF 145
EA126

DRAWFORM REVISION: 5 APRIL 2012

FILE NAME: N:\14072\04 CAD_REPAIR_TWYE\1302443-E-EA126.dwg LAYOUT NAME: EA126 PLOTTED: Tuesday, June 09, 2015 - 10:15am USER: mrm

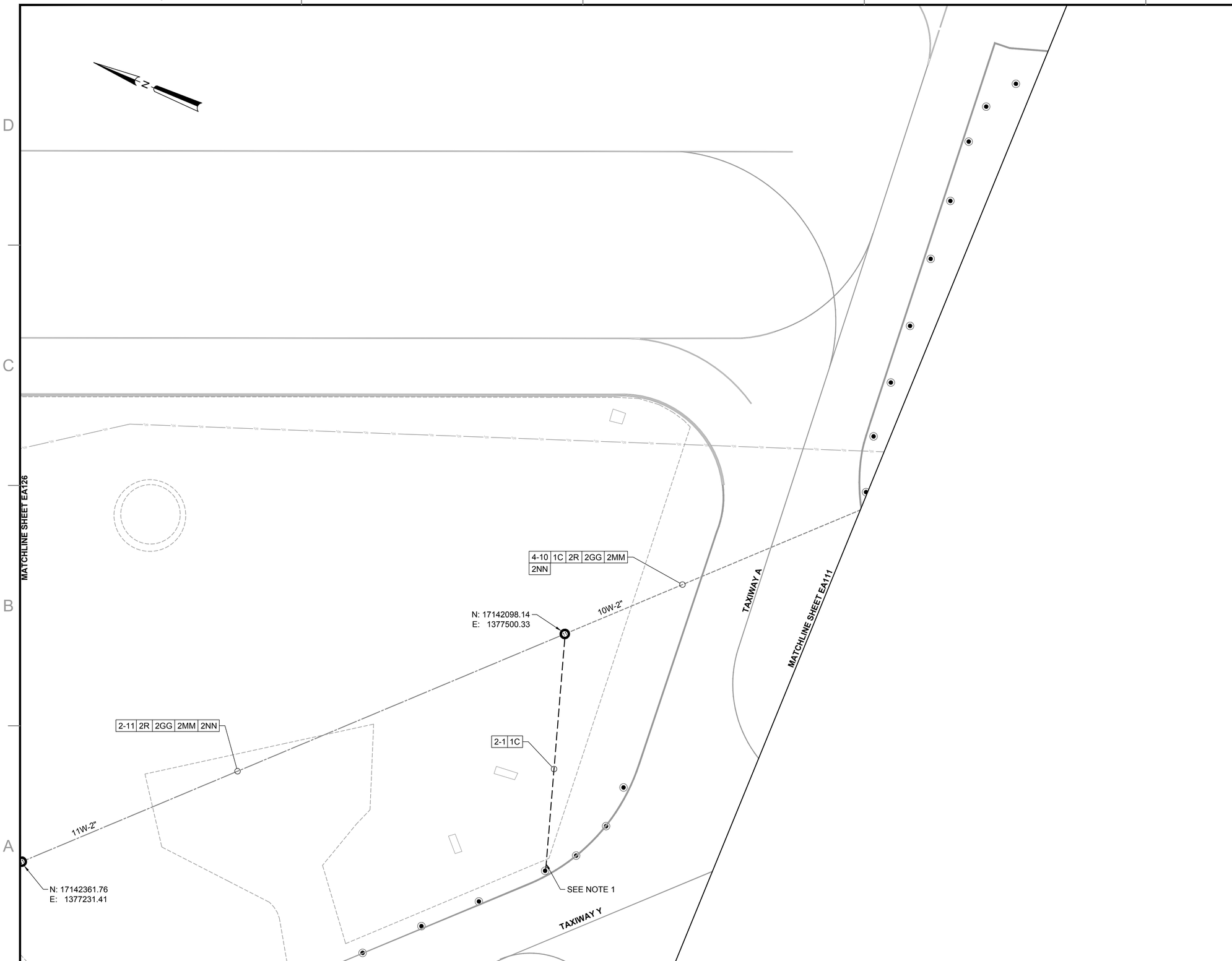

KEY MAP

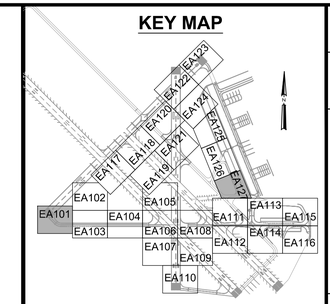

ELECTRICAL SYMBOL LEGEND

SYMBOL STATUS

EXISTING | REMOVE | INSTALL | REPLACE (R) | ADJUST (A)

SYMBOL	DESCRIPTION
	L-858 (L) AIRFIELD GUIDANCE SIGN
	L-861T (L) BASE MOUNTED MITL
	L-852T(L) IN-PAVEMENT MITL
R G	L-862E (L) BASE MOUNTED THRESHOLD LIGHT
#	L-867 ELECTRICAL PULLCAN (# INDICATES NUMBER OF CANS)
P	FUTURE L-867 ELECTRICAL PULLCAN
	L-849 (L) REIL (UNI-DIRECTIONAL)
	CONDUIT & CABLE
	DUCT BANK
	DUCT BANK - BORED UNDER PAVEMENT
	FUTURE DUCT BANK

CIRCUIT SCHEDULE

SYM	CIRCUIT & CABLE	SIZE
A	RUNWAY 4-22 EDGE	#8, 5kV, TYPE C
B	TAXIWAY C2 EDGE	#8, 5kV, TYPE C
C	TAXIWAY C3 EDGE	#8, 5kV, TYPE C
D	PAPI RUNWAY 4	#8, 5kV, TYPE C
E	PAPI RUNWAY 22	#8, 5kV, TYPE C
F	REIL RUNWAY 4 POWER	#8, 5kV, TYPE C
G	REIL RUNWAY 4 CONTROL	#12, 600v, TYPE C
H	REIL RUNWAY 22 POWER	#8, 5kV, TYPE C
I	REIL RUNWAY 22 CONTROL	#12, 600v, TYPE C
J	WIND CONE RUNWAY 4	#8, 600v, TYPE C
K	WIND CONE RUNWAY 17-22	#10, 600v, TYPE C
LA	RUNWAY 13R-31L NORTH	#8, 5kV, TYPE C
LB	RUNWAY 13R-31L SOUTH	#8, 5kV, TYPE C
M	RUNWAY 13L-31R EDGE	#8, 5kV, TYPE C
N	TAXIWAY C4 EDGE	#8, 5kV, TYPE C
P	RUNWAY 17-35 EDGE	#8, 5kV, TYPE C
Q	TAXIWAY C5	#8, 5kV, TYPE C
R	TAXIWAY C6	#8, 5kV, TYPE C
S	REIL POWER RUNWAY 35	#8, 5kV, TYPE C
T	REIL CONTROL RUNWAY 35	#12, 600v, TYPE C
V	PAPI RUNWAY 35	#8, 5kV, TYPE C
X	REIL POWER RUNWAY 17	#8, 5kV, TYPE C
Y	REIL CONTROL RUNWAY 17	#12, 600v, TYPE C
Z	TAXIWAY C1	#8, 5kV, TYPE C
AA	TAXIWAY C4	#8, 5kV, TYPE C
BB	PAPI RUNWAY 17	#8, 5kV, TYPE C
CC	TAXIWAY C11	#8, 5kV, TYPE C
DD	WIND CONE RUNWAY 35	#10, 600v, TYPE C
EE	WIND CONE RUNWAY 13L	#10, 600v, TYPE C
FF	WIND CONE RUNWAY 31L	#10, 600v, TYPE C
GG	TAXIWAY C7	#8, 5kV, TYPE C
HH	TAXIWAY C8	#8, 5kV, TYPE C
II	TAXIWAY C9	#8, 5kV, TYPE C
JJ	TAXIWAY C10	#8, 5kV, TYPE C
KK	TAXIWAY C11	#8, 5kV, TYPE C
LL	TAXIWAY C12	#8, 5kV, TYPE C
MM	TAXIWAY C13	#8, 5kV, TYPE C
NN	TAXIWAY C14	#8, 5kV, TYPE C
PP	TAXIWAY C15	#8, 5kV, TYPE C
QQ	TAXIWAY C16	#8, 5kV, TYPE C
*	EMPTY CONDUIT	

NOTE:
SPARE CONDUITS PROVIDED FOR FUTURE USE.

30 0 30 60
SCALE: 1"=30' FEET

SYM	DESCRIPTION	DATE	APPR
0	ISSUED FOR BID	8 JUN 15	

NAVFAC

STATE OF TEXAS
JON M. McCALMONT
100633
LICENSED PROFESSIONAL ENGINEER
8 JUN 15
SEAL

leidos
LEIDOS ENGINEERING, LLC
ONE WEST 3RD ST.
TULSA, OK 74103

DELTA AIRPORT CONSULTANTS, INC.
9711 Farrar Court, Suite 100
Richmond, Virginia 23236
phone: (804) 275-8301 • fax: (804) 275-8371
www.deltaairport.com

Delta Project No. 14072 A/E INFO

APPROVED
FOR COMMANDER NAVFAC
ACTIVITY
SATISFACTORY TO DATE
DES EFC DRW MRM CHK MWK
PROJECT MANAGER
IPT TECH. BRANCH HEAD
CHIEF ENG/ARCH (CORE)

DEPARTMENT OF THE NAVY
NAVAL FACILITIES ENGINEERING COMMAND
CIBL CORE
NAVAL FACILITIES ENGINEERING COMMAND SOUTHEAST
NAVAL AIR STATION JACKSONVILLE
NAS CORPUS CHRISTI
CORPUS CHRISTI, TEXAS

NAS CORPUS CHRISTI AIRFIELD REPAIRS
TAXIWAY 'E'
ELECTRICAL LAYOUT

SCALE: 1"=30"
EPROJECT NO.:
CONSTR. CONTR. NO.
NAVFAC DRAWING NO.
15095263
SHEET 135 OF 145
EA127

DRAWFORM REVISION: 5 APRIL 2012

FILE NAME: N:\14072\04 CAD_REPAIR_TWY\E\320443-E-EA127.dwg LAYOUT NAME: EA127 PLOTTED: Tuesday, June 09, 2015 - 10:16am USER: mrm

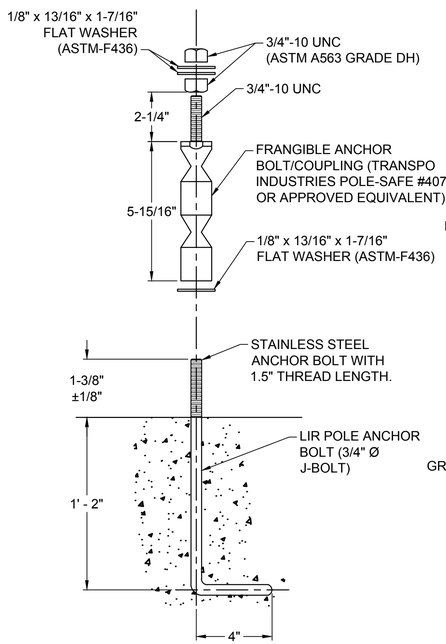

1 TYPICAL FRANGIBLE ANCHOR BOLT DETAIL

SCALE: NTS

NOTE:

1. FLAT WASHER BOTTOM SHALL BE COATED WITH ASPHALTIC COMPOUND TO PREVENT CORROSIVE INTERACTION WITH CONCRETE SURFACE. USE APPROVED STAINLESS STEEL WASHERS, NUTS, ETC.
2. THE CONCRETE SURFACE BETWEEN AND AROUND THE ANCHOR BOLTS MUST BE LEVEL, SMOOTH, FLAT AND FREE OF DEBRIS.

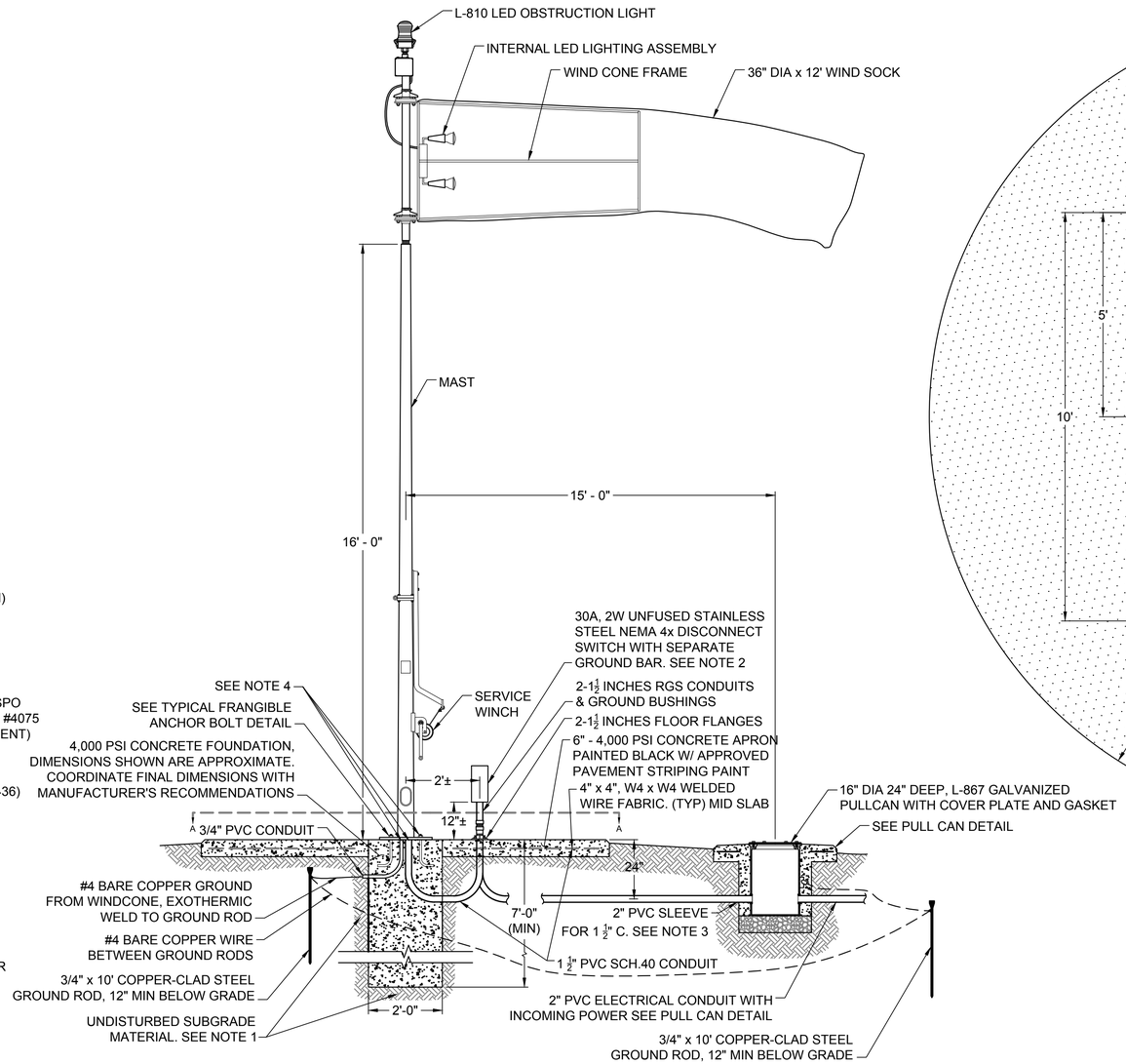

2 PRIMARY LED WIND CONE DETAIL (L-807) INTERNALLY LIGHTED

SCALE: NTS

NOTES:

1. PROVIDE AUGURED HOLE FOR WIND CONE FOUNDATION. IF WIND CONE FOUNDATION IS PRECAST, PROVIDE TXDOT 150 PSI FLOWABLE FILL AS BACKFILL. FLOWABLE FILL SHALL BE INSTALLED IMMEDIATELY FOLLOWING THE AUGERING AND SETTING OF THE PRECAST FOUNDATION.
2. PROVIDE/INSTALL A SQ. "D" SURGE ARRESTOR #SDSA 1175 OR AN APPROVED EQUIVALENT ON THE SIDE OR BOTTOM OF THE DISCONNECT SWITCH. CONNECT THE SURGE ARRESTOR TO THE LOAD SIDE OF THE DISCONNECT SWITCH. PROVIDE WATERPROOF CONNECTION/SEAL.
3. EXTEND 1 ½" PVC CONDUIT INTO PULLCAN ~1 ½", INSTALL A BELL END & DUCT SEAL 1 ½" CONDUIT AT BOTH ENDS.
4. MOUNT WINDCONE ON FRANGIBLE ANCHOR BOLTS (SEE DETAIL) AND PROVIDE A 1/16" THICK ALUMINUM SKIRT WITH A MIG WELDED SEAM UNDER WINDCONE BASE TO SEAL THE OPENING BETWEEN THE BASE PLATE AND CONCRETE SURFACE. THE SKIRT SHALL BE SIZED AND SHAPED TO FIT SNUGLY OVER THE FRANGIBLE ANCHOR BOLTS AND SEALED ON THE TOP AND BOTTOM WITH AN APPROVED CLEAR SILICONE SEALANT. THE PVC CONDUITS SHALL BE STUB-UP 1.5" ABOVE THE CONCRETE SURFACE AND DUCT SEALED AFTER CABLE INSTALLATION.

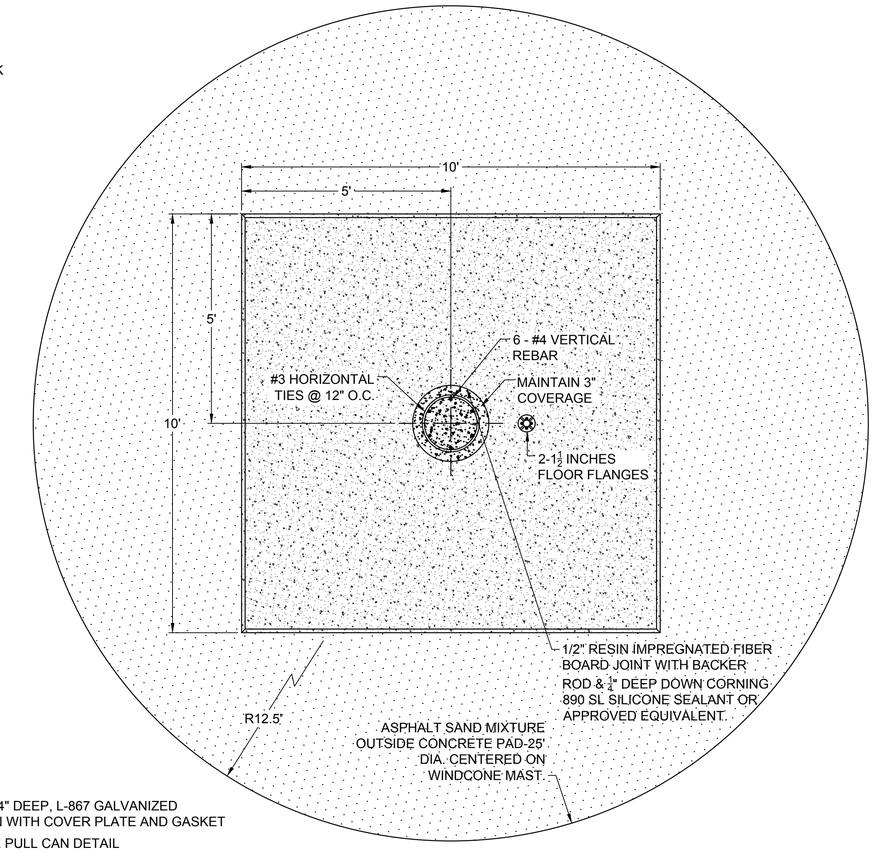

SECTION "A - A"

SYM	DESCRIPTION	DATE	APPR
0	ISSUED FOR BID	8 JUN 15	

NAVFAC

STATE OF TEXAS — JON M. McCALMONT — 100633 — LICENSED PROFESSIONAL ENGINEER — 8 JUN 15 — SEAL

leidos
LEIDOS ENGINEERING, LLC
ONE WEST 3RD ST.
TULSA, OK 74103

DELTA AIRPORT CONSULTANTS, INC.
9711 Forror Court, Suite 100
Richmond, Virginia 23236
phone: (804) 275-8301 • fax: (804) 275-8371
www.deltaairport.com

Delta Project No. 14072 A/E INFO

APPROVED

FOR COMMANDER NAVFAC

ACTIVITY

SATISFACTORY TO DATE

DES EFC DRW MRM CHK MWK

PROJECT MANAGER

IPT TECH. BRANCH HEAD

CHIEF ENG/ARCH (CORE)

DEPARTMENT OF THE NAVY
NAVAL FACILITIES ENGINEERING COMMAND
CIBL CORE
NAVAL FACILITIES ENGINEERING COMMAND SOUTHEAST
NAVAL AIR STATION JACKSONVILLE
NAS CORPUS CHRISTI
CORPUS CHRISTI, TEXAS
NAS CORPUS CHRISTI AIRFIELD REPAIRS
TAXIWAY 'E'
ELECTRICAL DETAILS

SCALE: NTS

EPROJECT NO.:

CONSTR. CONTR. NO.

NAVFAC DRAWING NO.
15095264

SHEET 136 OF 145

E-501

DRAWFORM REVISION: 5 APRIL 2012

FILE NAME: N:\14072\04 CAD_REPAIR_TWYE\1302443-E-E501.dwg LAYOUT NAME: E501 PLOTTED: Tuesday, June 09, 2015 - 10:16am USER: mrm

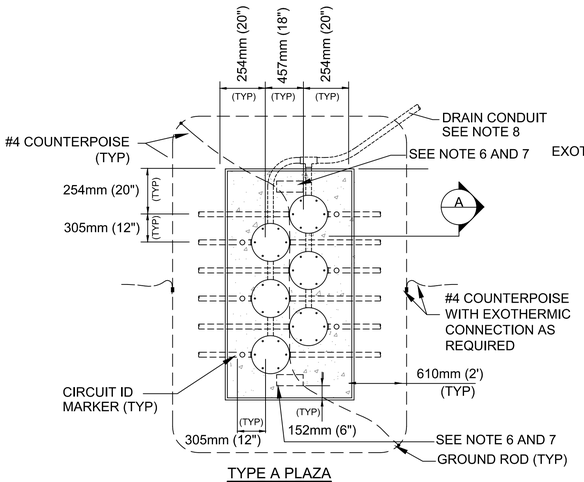

TYPE A PLAZA

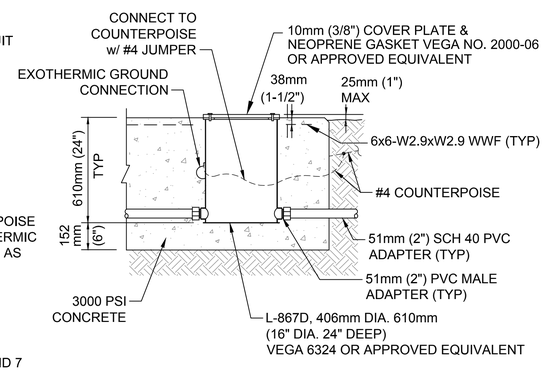

A SECTION

1 JUNCTION CAN PLAZA, TYPE A

SCALE: NTS

NOTES:

1. NUMBER OF JUNCTION CANS AND CONDUIT CONFIGURATIONS VARY. SEE LAYOUT PLAN SHEETS FOR ORIENTATION.
2. CONDUITS WHICH ARE NOT USED IN THE PROJECT SHALL BE CAPPED 304mm (12") OUTSIDE OF PLAZA CONCRETE.
3. ORIENT PLAZA AS SHOWN ON LAYOUT PLAN SHEETS.
4. CONTRACTOR SHALL PROVIDE A 51mm (2") DIA DOMED BRONZE MARKER AT EACH JUNCTION CAN AS SHOWN. MARKER SHALL BE STAMPED WITH CIRCUIT IDENTIFICATION AS SHOWN ON LAYOUT PLAN SHEETS.
5. INSTALL GROUND RODS AND GROUND LOOP AT ALL JUNCTION CAN PLAZAS AS SHOWN. TWO GROUND RODS PER PLAZA LOCATED AT OPPOSITE CORNERS SHALL BE PROVIDED. COUNTERPOISE SHALL BE LOCATED NOMINALLY 304mm (12") BELOW EXISTING GRADE.
6. CONTRACTOR SHALL LABEL 2 ENDS OF EACH JUNCTION CAN PLAZA (JCP) BY IMPRESSING THE JCP IDENTIFICATION NUMBER INTO THE CONCRETE FOUNDATION DURING PLACEMENT. LETTERS AND NUMBERS SHALL BE 102mm (4") IN HEIGHT, PROPORTIONAL IN WIDTH, AND HAVE A STROKE WIDTH OF 13mm (1/2") AND 6mm (1/4") DEPTH.
7. SEE LAYOUT PLAN SHEETS FOR JCP IDENTIFICATION NUMBERS.
8. DRAINS NOT REQUIRED FOR THIS PROJECT. DRAIN CONDUIT BETWEEN CANS NOT REQUIRED FOR THIS PROJECT.

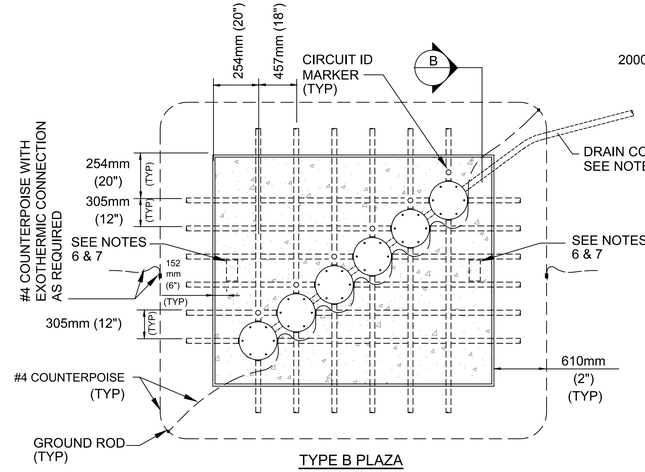

TYPE B PLAZA

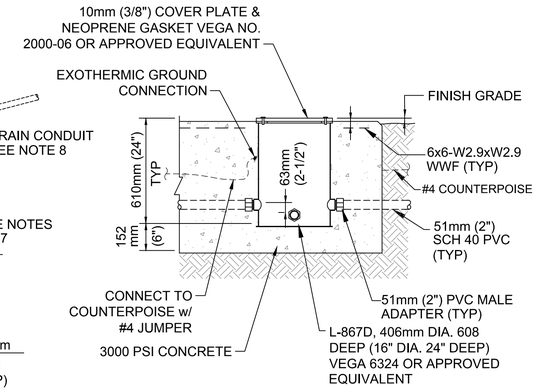

B SECTION

2 JUNCTION CAN PLAZA, TYPE B

SCALE: NTS

NOTES:

1. NUMBER OF JUNCTION CANS AND CONDUIT CONFIGURATIONS VARY. SEE LAYOUT PLAN SHEETS FOR ORIENTATION.
2. CONDUITS WHICH ARE NOT USED IN THE PROJECT SHALL BE CAPPED 304mm (12") OUTSIDE OF PLAZA CONCRETE.
3. ORIENT PLAZA AS SHOWN ON LAYOUT PLAN SHEETS.
4. CONTRACTOR SHALL PROVIDE A 51mm (2") DIA DOMED BRONZE MARKER AT EACH JUNCTION CAN AS SHOWN. MARKER SHALL BE STAMPED WITH CIRCUIT IDENTIFICATION AS SHOWN ON LAYOUT PLAN SHEETS.
5. INSTALL GROUND RODS AND GROUND LOOP AT ALL JUNCTION CAN PLAZAS AS SHOWN. TWO GROUND RODS PER PLAZA LOCATED AT OPPOSITE CORNERS SHALL BE PROVIDED. COUNTERPOISE SHALL BE LOCATED NOMINALLY 304mm (12") BELOW EXISTING GRADE.
6. CONTRACTOR SHALL LABEL 2 ENDS OF EACH JUNCTION CAN PLAZA (JCP) BY IMPRESSING THE JCP IDENTIFICATION NUMBER INTO THE CONCRETE FOUNDATION DURING PLACEMENT. LETTERS AND NUMBERS SHALL BE 102mm (4") IN HEIGHT, PROPORTIONAL IN WIDTH, AND HAVE A STROKE WIDTH OF 13mm (1/2") AND 6mm (1/4") DEPTH.
7. SEE LAYOUT PLAN SHEETS FOR JCP IDENTIFICATION NUMBERS.
8. DRAINS NOT REQUIRED FOR THIS PROJECT. DRAIN CONDUIT BETWEEN CANS NOT REQUIRED FOR THIS PROJECT.

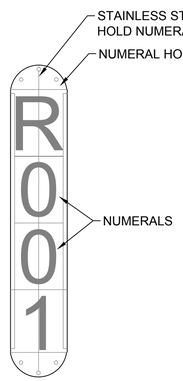

3 LIGHT FIXTURE IDENTIFICATION TAG DETAIL

SCALE: NTS

NOTES:

1. THE CONTRACTOR SHALL FURNISH AND INSTALL NUMBER TAGS ON ALL LIGHTS. THE TAGS SHALL BE REFLECTIVE AND SHALL BE "E-Z TAG" AS MANUFACTURED BY ALMATEK, OR APPROVED EQUAL. EACH TAG SHALL BE A VERTICAL CONFIGURATION, CONSISTING OF A HOLDER AND NUMERALS.
2. THE NUMBER TAG SHALL CONSIST OF ONE LETTER (R OR C) PROCEEDED BY THREE NUMBERS. THE NUMBER SEQUENCE SHALL BE AS DEFINED ON THE PLANS.

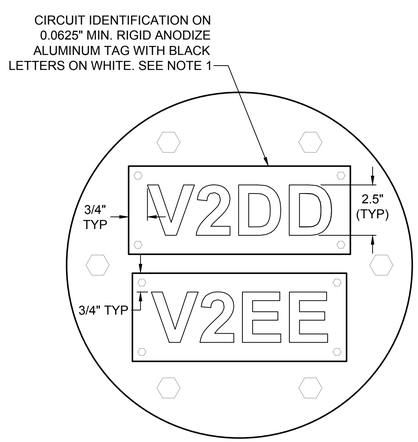

4 PULLCAN LID LABEL DETAIL

SCALE: NTS

NOTE:

1. PROVIDE HIGH PERFORMANCE ADHESIVE BACKING AND 4-3/16" DIA. HOLE FOR MECHANICAL ATTACHMENT WITH S.S. HEX HEAD WASHER SELF TAPPING SCREWS. PROVIDE SAMPLE TAG FOR APPROVAL BY THE CONTRACTING OFFICER.

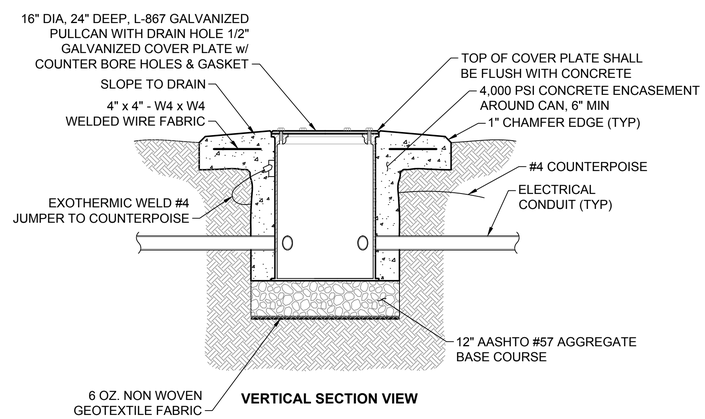

VERTICAL SECTION VIEW

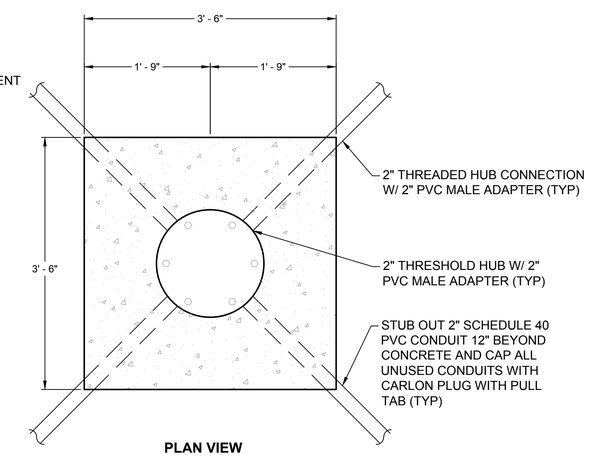

PLAN VIEW

5 PULLCAN DETAIL

SCALE: NTS

NOTES:

1. ADJUST ORIENTATION OF CONDUIT TO MATCH FIELD CONDITIONS.
2. MULTI CANS MAY BE INSTALLED IN THE SAME PAD. PROVIDE A MINIMUM SPACING OF 2'-0" C-C BETWEEN CANS AND 1'-9" FROM THE CENTER OF THE CAN TO THE EDGE OF THE PAD.
3. COVER PLATE SHALL BE FLUSH WITH TOP OF CONCRETE. PROVIDE 1/8" TO 1/4" GAP BETWEEN CONCRETE AND COVER PLATE.
4. CONTRACTOR SHALL INSTALL A LABEL INDICATING THE CIRCUIT(S) ID (2.5" HIGH) ON THE APPROPRIATE CAN LID FOR CIRCUIT IDENTIFICATION. SEE "PULLCAN LID LABEL DETAIL". DO NOT LABEL SPARE PULLCANS.

SYM	DESCRIPTION	DATE	APPR
0	ISSUED FOR BID	8 JUN 15	

NAVFAC

STATE OF TEXAS — JON M. McCALMONT — 100633 — LICENSED PROFESSIONAL ENGINEER — 8 JUN 15 — SEAL

leidos

LEIDOS ENGINEERING, LLC
ONE WEST 3RD ST.
TULSA, OK 74103

DELTA AIRPORT CONSULTANTS, INC.
9711 Forror Court, Suite 100
Richmond, Virginia 23236
phone: (804) 275-8301 • fax: (804) 275-8371
www.deltaairport.com

Delta Project No. 14072 A/E INFO

APPROVED

FOR COMMANDER NAVFAC

ACTIVITY

SATISFACTORY TO DATE

DES EFC | DRW MRM | CHK MWK

PROJECT MANAGER

IPT TECH. BRANCH HEAD

CHIEF ENG/ARCH (CORE)

DEPARTMENT OF THE NAVY
NAVAL FACILITIES ENGINEERING COMMAND
CIBL CORE

NAVAL FACILITIES ENGINEERING COMMAND SOUTHEAST
NAVAL AIR STATION JACKSONVILLE

NAS CORPUS CHRISTI

CORPUS CHRISTI, TEXAS

NAS CORPUS CHRISTI AIRFIELD REPAIRS
TAXIWAY 'E'

ELECTRICAL DETAILS

SCALE: NTS

EPROJECT NO.:

CONSTR. CONTR. NO.

NAVFAC DRAWING NO.
15095265

SHEET 137 OF 145

E-502

DRAWFORM REVISION: 5 APRIL 2012

FILE NAME: N:\14072\04 CAD_REPAIR_TWY E\130443-E-E502.dwg LAYOUT NAME: E502 PLOTTED: Tuesday, June 09, 2015 - 10:16am USER: mrm

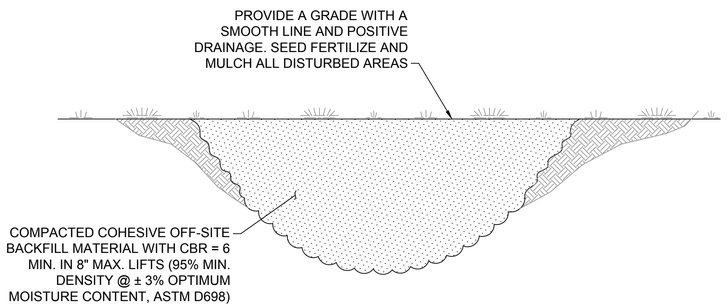

1 DEMOLITION/REPAIR IN TURF AREA DETAIL

SCALE: NTS

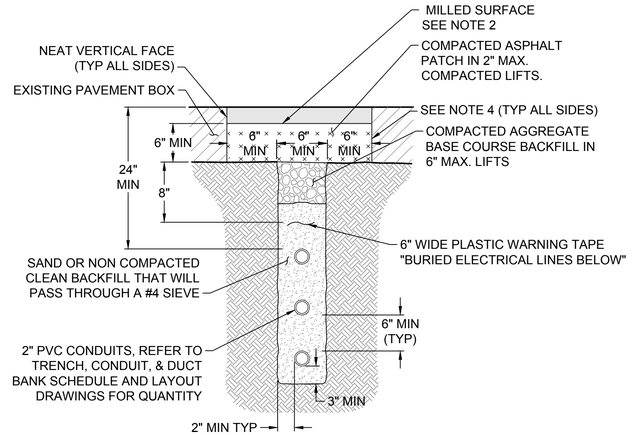

SINGLE COLUMN CONFIGURATION
SHOULDER PAVEMENT

2 CONDUIT DETAIL - TRENCHED THROUGH EXISTING HMA PAVEMENT (2" PVC)

SCALE: NTS

NOTES:

1. THE ILLUSTRATION SHOWN ABOVE OF THE 3-WAY SINGLE COLUMN CONDUIT RUNS ARE FOR CONFIGURATION PURPOSES ONLY. SEE TRENCH, CONDUIT, & DUCT BANK SCHEDULE AND LAYOUT DRAWINGS FOR CONDUIT QUANTITY. SEE ELECTRICAL NOTES SHEET FOR TRENCH, CONDUIT, & DUCT BANK NOTES.
2. IN A NON-MILLED SHOULDER AREA, THE ASPHALT PATCH SHALL MATCH THE EXISTING PAVEMENT SURFACE.
3. COMPACTED AGGREGATE BASE COURSE SHALL BE COMPACTED TO A 98% MIN. DENSITY @ ±3% OPTIMUM MOISTURE CONTENT PER ASTM D698.
4. PRIOR TO PAVING, APPLY A BITUMINOUS PRIME COAT ON ALL VERTICAL ASPHALT AND ALL HORIZONTAL AGGREGATE BASE COURSE SURFACES AT A RATE OF ~0.15 GALLONS PER SQ. YARD.

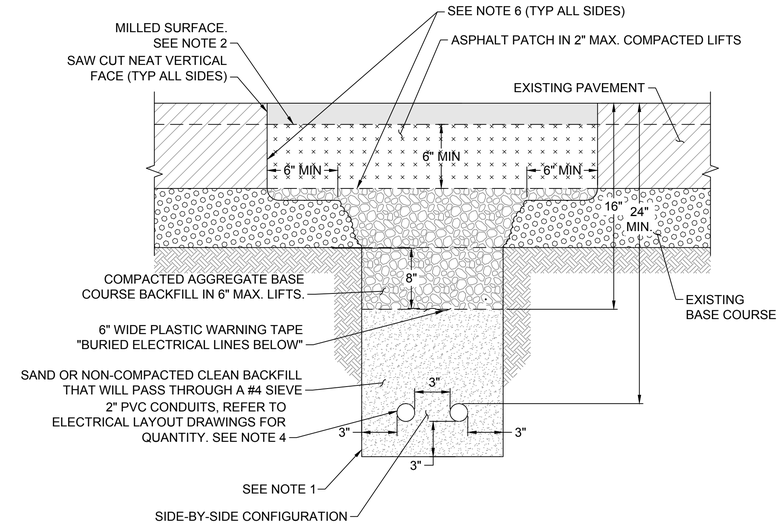

3 CONDUIT DETAIL - CUT & PATCH IN-SHOULDER PAVEMENT

SCALE: NTS

NOTES:

1. PRIOR TO BACKFILLING, CLEAN-OUT EXCAVATED AREA OF ALL LOOSE MATERIAL TO EXPOSE UNDISTURBED EDGES.
2. IN A NON-MILLED SHOULDER AREA, THE ASPHALT PATCH SHALL MATCH THE EXISTING PAVEMENT SURFACE.
3. SPACE GROUND RODS AT 500' MAX. INTERVALS. BOND COUNTERPOISE TO GROUND ROD WITH #4 BARE COPPER CONDUCTOR, EXOTHERMIC WELD BOTH ENDS.
4. IF MORE THAN TWO 2" CONDUITS ARE INSTALLED SIDE-BY-SIDE, INCREASE THE DEPTH OF THE TOP CONDUITS BY AN ADDITIONAL 6" FOR EACH ADDITIONAL CONDUIT INSTALLED SIDE-BY-SIDE. VERTICALLY STACKED CONDUITS SHALL HAVE 6" MIN. CLEARANCE BETWEEN THEM.
5. COMPACTED AGGREGATE BASE COURSE SHALL BE COMPACTED TO A 98% MIN. DENSITY @ ±3% OPTIMUM MOISTURE CONTENT PER ASTM D698.
6. PRIOR TO PAVING, APPLY A BITUMINOUS PRIME COAT ON ALL EXISTING ASPHALT AND ALL HORIZONTAL AGGREGATE BASE COURSE SURFACES AT A RATE OF ~0.15 GALLONS PER SQ. YARD.

1 TRENCH, CONDUIT, & DUCT BANK NOTES

SCALE: NTS

1. ROUTE 5kV CABLES IN LOWER LEVEL CONDUITS WHERE POSSIBLE. DO NOT ROUTE DIFFERENT VOLTAGE CLASSIFICATION CABLES IN THE SAME CONDUIT.
2. GROUND RODS SHALL ALSO BE USED TO TERMINATE COUNTERPOISE AT BOTH ENDS OF TRENCH, CONDUIT RUN, OR DUCT BANK.
3. PROVIDE CABLE TAGS FOR EACH CABLE OR WIRE AT DUCT ENTRANCES ENTERING OR LEAVING OF MANHOLES, HANDHOLES, AND AT EACH TERMINAL WITHIN THE LIGHTING VAULT. USE RAISED LETTER NOT LESS THAN 1/4 INCH IN HEIGHT (REF UFGS-34 43 Art 2.4.5).

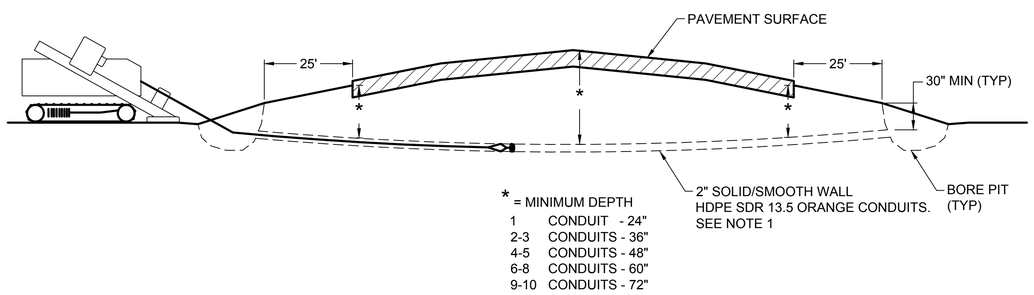

4 2" HDPE DIRECTIONAL BORING UNDER PAVEMENT DETAIL

SCALE: NTS

NOTE:

1. ATTACH 1-#4 BARE STRANDED COPPER WIRE TO THE OUTSIDE OF THE HDPE CONDUIT OR GROUP OF CONDUITS WHEN INSTALLING THE CONDUITS. CONNECT THE #4 BARE WIRE TO THE CONTINUING TRENCH COUNTERPOISE WITH EXOTHERMIC WELDS. PROVIDE AND CONNECT A 3/4" x 10' COPPER GROUND ROD AT EACH BORE PIT AND/OR BORE TERMINATION LOCATION.

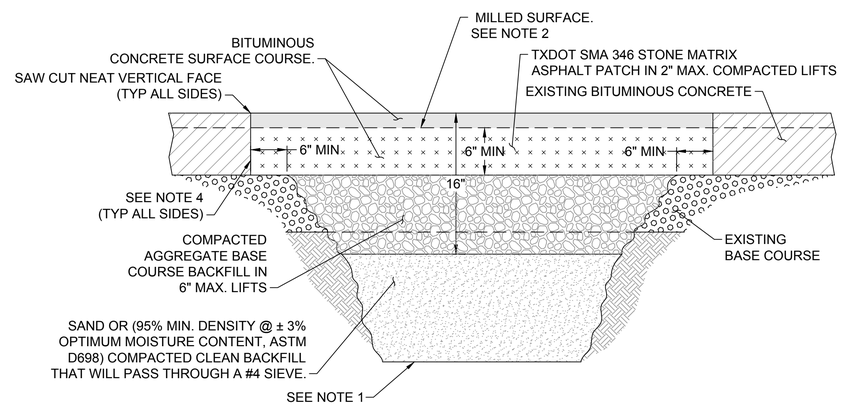

5 DEMOLITION REPAIR IN-SHOULDER PAVEMENT DETAIL

SCALE: NTS

NOTES:

1. PRIOR TO BACKFILLING, CLEAN-OUT EXCAVATED AREA OF ALL LOOSE MATERIAL TO EXPOSE UNDISTURBED EDGES.
2. IN A NON-MILLED SHOULDER AREA, THE ASPHALT PATCH SHALL MATCH THE EXISTING PAVEMENT SURFACE.
3. COMPACTED AGGREGATE BASE COURSE SHALL BE COMPACTED TO A 98% MIN. DENSITY @ ±3% OPTIMUM MOISTURE CONTENT PER ASTM D698.
4. PRIOR TO PAVING, APPLY A BITUMINOUS PRIME COAT ON ALL EXISTING ASPHALT AND ALL HORIZONTAL AGGREGATE BASE COURSE SURFACES AT A RATE OF ~0.15 GALLONS PER SQ. YARD.

SYM	DESCRIPTION	DATE	APPR
0	ISSUED FOR BID	8 JUN 15	

NAVFAC

STATE OF TEXAS — JON M. McCALMONT — 100633 — LICENSED PROFESSIONAL ENGINEER — 8 JUN 15 — SEAL

leidos
LEIDOS ENGINEERING, LLC
ONE WEST 3RD ST.
TULSA, OK 74103

DELTA AIRPORT CONSULTANTS, INC.
9711 Farrar Court, Suite 100
Richmond, Virginia 23236
phone: (804) 275-8301 • fax: (804) 275-8371
www.deltaairport.com

Delta Project No. 14072 A/E INFO

APPROVED

FOR COMMANDER NAVFAC

ACTIVITY

SATISFACTORY TO DATE

DES EFC DRW MRM CHK MWK

PROJECT MANAGER

IPT TECH. BRANCH HEAD

CHIEF ENG/ARCH (CORE)

DEPARTMENT OF THE NAVY
NAVAL FACILITIES ENGINEERING COMMAND
CIBL CORE

NAVAL FACILITIES ENGINEERING COMMAND SOUTHEAST
NAVAL AIR STATION JACKSONVILLE

NAS CORPUS CHRISTI
CORPUS CHRISTI, TEXAS

NAS CORPUS CHRISTI AIRFIELD REPAIRS TAXIWAY 'E'

ELECTRICAL DETAILS

SCALE: NTS

EPROJECT NO.:

CONSTR. CONTR. NO.

NAVFAC DRAWING NO.
15095266

SHEET 138 OF 145

E-503

DRAWFORM REVISION: 5 APRIL 2012

FILE NAME: N:\14072\04 CAD_REPAIR_TWYE\1302443-E-E503.dwg LAYOUT NAME: E503 PLOTTED: Tuesday, June 09, 2015 - 10:16am USER: mrm

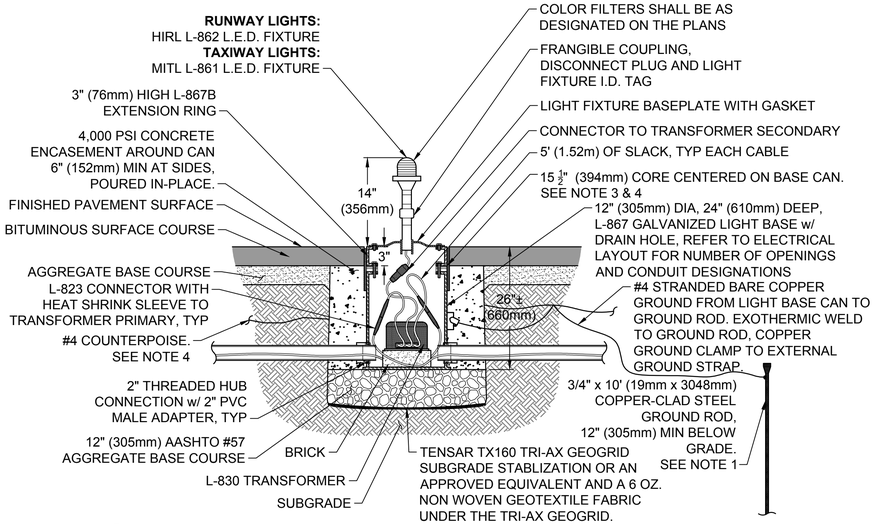

1 L.E.D. RUNWAY & TAXIWAY EDGE LIGHT IN PAVED SHOULDER DETAIL

SCALE: NTS

NOTE:

1. INSTALL A 3/4" x 10' (19mm X 3048mm) COPPER-CLAD GROUND RODS IN THE TRENCH 3' (76mm) MIN FROM BASE CAN.
2. PROVIDE MUD PLATE, CORE PAVEMENT INSTALL EXTENSION RING AND SPACERS AS REQUIRED. THE EXTENSION RING SHALL BE FLUSH WITH THE HIGHEST EDGE OF THE BITUMINOUS CONCRETE FOR DRAINAGE.
3. CORE FULL DEPTH OF BITUMINOUS CONCRETE. FILL VOID BETWEEN PAVEMENT AND EXTENSION RING WITH AN APPROVED NON-SHRINK, NON-METRALIC HYDRAULIC GROUT (4,000 PSI MIN.) THE GROUT SHALL BE FLUSH WITH THE TOP OF THE EXTENSION RING AND THE TOP OF THE PAVEMENT.
4. ROUTE COUNTERPOISE AROUND CONCRETE ENCASEMENT TOWARD FULL STRENGTH PAVEMENT

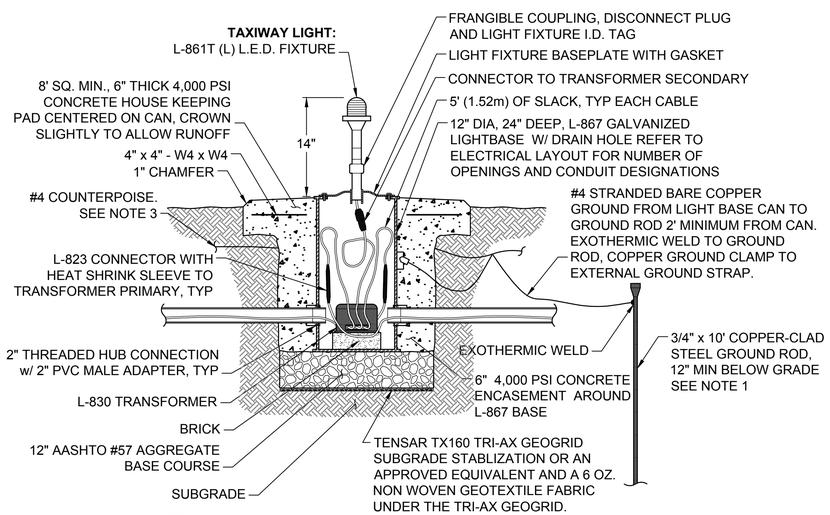

2 L.E.D. TAXIWAY EDGE LIGHT DETAIL

SCALE: NTS

NOTES:

1. INSTALL A 3/4" x 10' (19mm X 3048mm) COPPER-CLAD GROUND ROD IN THE TRENCH 3' MIN FROM BASE CAN.
2. WHEN THE CONCRETE HOUSEKEEPING PAD ABUTS AN EXISTING PAVEMENT, SAW CUT A STRAIGHT AND NEAT VERTICAL FACE TO PROVIDE A CONCRETE FORMED EDGE WITH THE PAVEMENT.
3. ROUTE COUNTERPOISE AROUND CONCRETE ENCASEMENT TOWARD FULL STRENGTH PAVEMENT

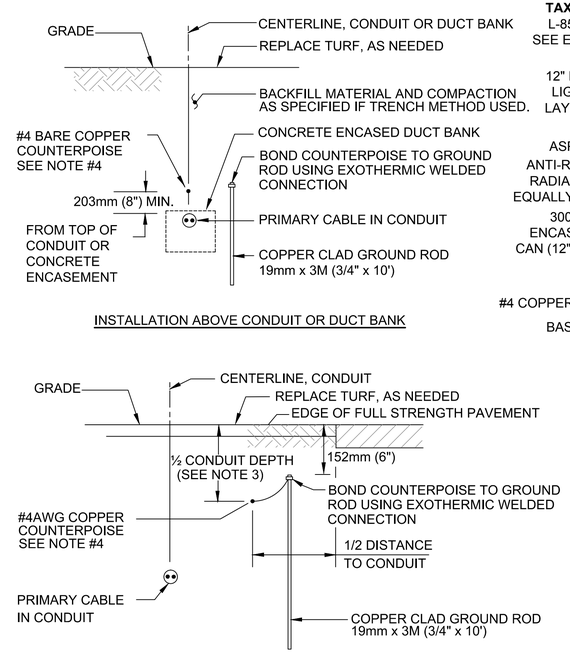

3 COUNTERPOISE & GROUND ROD INSTALLATION DETAIL

SCALE: NTS

NOTES:

1. CONNECT COUNTERPOISE TO EACH LIGHT BASE AND MANHOLES/HANDHOLE GROUNDING COMPONENTS, UNLESS OTHERWISE SPECIFIED.
2. PROVIDE GROUND RODS SPACED MAX. 300M (1000FT).
3. PLACE COUNTERPOISE ON NEXT-TO-LAST LIFT OF COMPACTED BASE MATERIAL UNDER SHOULDER.
4. WHERE SOIL IS CONSIDERED HIGHLY CORROSIVE (<10,000 OHM-CM RESISTIVITY), THE SIZE OF THE COUNTERPOISE SHALL BE #1/0 AWG.
5. D.E.B. CONDUIT INSTALLATION SHALL BE 24" MIN BELOW GRADE TO THE TOP OF THE CONDUIT. CONCRETE ENCASED CONDUIT INSTALLATION SHALL BE 30" MIN BELOW GRADE TO THE TOP OF THE ENCASEMENT.

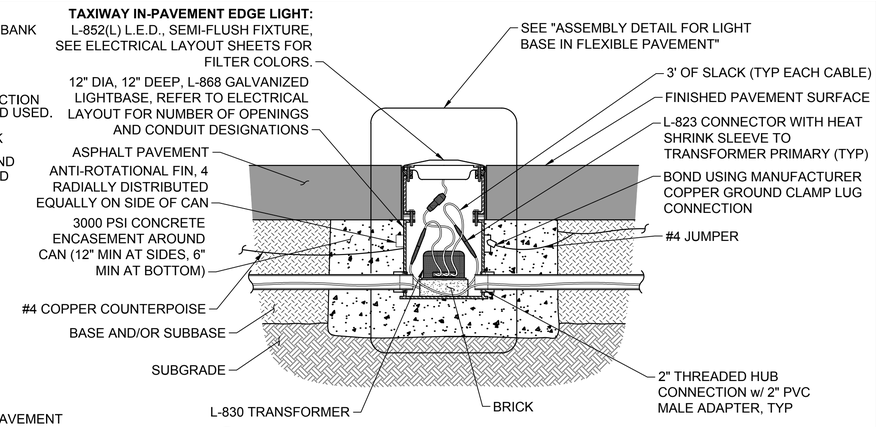

4 L.E.D. TAXIWAY IN-PAVEMENT LIGHT DETAIL

SCALE: NTS

NOTES:

1. USE HIGH EARLY STRENGTH CONCRETE. PROVIDE SUBMITTAL FOR APPROVAL.
2. SEALANT SHALL BE DOW CORNING 890-SL SEALANT OR APPROVED EQUIVALENT.
3. SEALANT SHALL BE APPLIED SO THAT LIGHT FIXTURE HOUSING IS NOT SEALED TO FLANGE RING.
4. PERIMETER EDGE OF FIXTURE SHALL BE FLUSH WITH PAVEMENT SURFACE
5. ALL DIRECT BURIED BARE WIRE CONNECTIONS SHALL BE EXOTHERMIC WELDS ONLY. LUG CONNECTIONS SHALL BE USED FOR CONCRETE ENCASED APPLICATIONS.

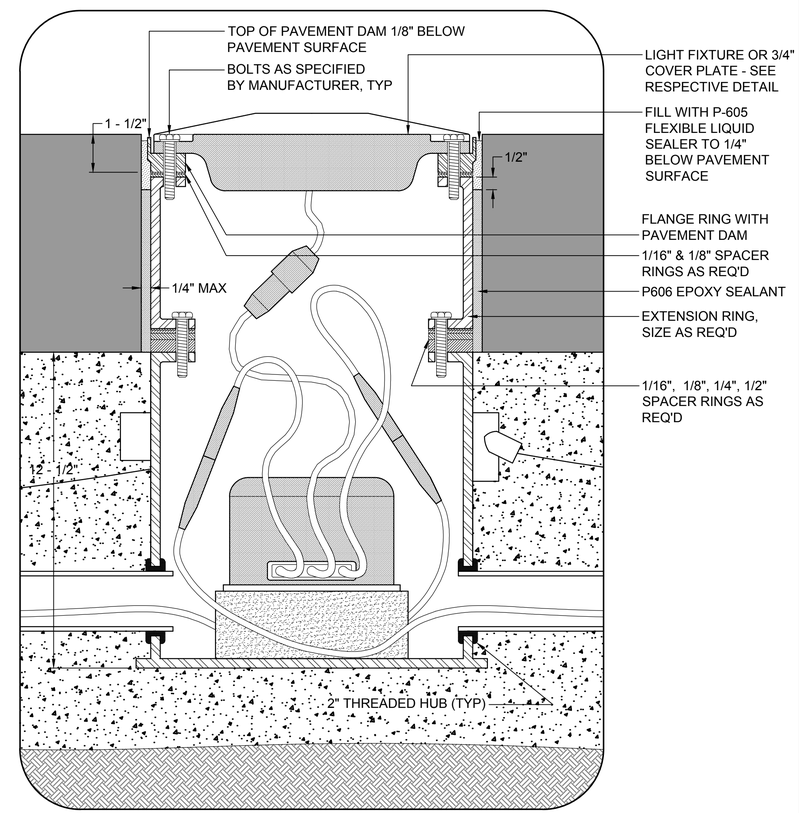

5 ASSEMBLY DETAIL FOR LIGHT BASE IN FLEXIBLE PAVEMENT

SCALE: NTS

NOTES:

1. P-605 SEALANT SHALL BE TYPE 3 COMPATIBLE WITH ASPHALT.
2. SEALANT SHALL BE APPLIED SO THAT LIGHT FIXTURE HOUSING IS NOT SEALED TO FLANGE RING.
3. PERIMETER EDGE OF FIXTURE SHALL BE FLUSH WITH PAVEMENT SURFACE.

SYM	DESCRIPTION	DATE	APPR
0	ISSUED FOR BID	8 JUN 15	

NAVFAC

STATE OF TEXAS — JON M. McCALMONT — 100633 — LICENSED PROFESSIONAL ENGINEER — 8 JUN 15 — SEAL

leidos
LEIDOS ENGINEERING, LLC
ONE WEST 3RD ST.
TULSA, OK 74103

DELTA AIRPORT CONSULTANTS, INC.
9711 Ferrar Court, Suite 100
Richmond, Virginia 23236
phone: (804) 275-8301 • fax: (804) 275-8371
www.deltaairport.com

Delta Project No. 14072 A/E INFO

APPROVED

FOR COMMANDER NAVFAC

ACTIVITY

SATISFACTORY TO DATE

DES EFC DRW MRM CHK MWK

PROJECT MANAGER

IPT TECH. BRANCH HEAD

CHIEF ENG/ARCH (CORE)

DEPARTMENT OF THE NAVY
NAVAL FACILITIES ENGINEERING COMMAND
CIBIL CORE
NAVAL FACILITIES ENGINEERING COMMAND SOUTHEAST
NAVAL AIR STATION JACKSONVILLE
NAS CORPUS CHRISTI
CORPUS CHRISTI, TEXAS
NAS CORPUS CHRISTI AIRFIELD REPAIRS
TAXIWAY 'E'
ELECTRICAL DETAILS

SCALE: NTS

EPROJECT NO.:

CONSTR. CONTR. NO.

NAVFAC DRAWING NO.
15095267

SHEET 139 OF 145

E-504

DRAWFORM REVISION: 5 APRIL 2012

FILE NAME: N:\14072\04 CAD_REPAIR_TWY E\1302443-E-E504.dwg LAYOUT NAME: E504 PLOTTED: Tuesday, June 09, 2015 - 10:16am USER: mrm

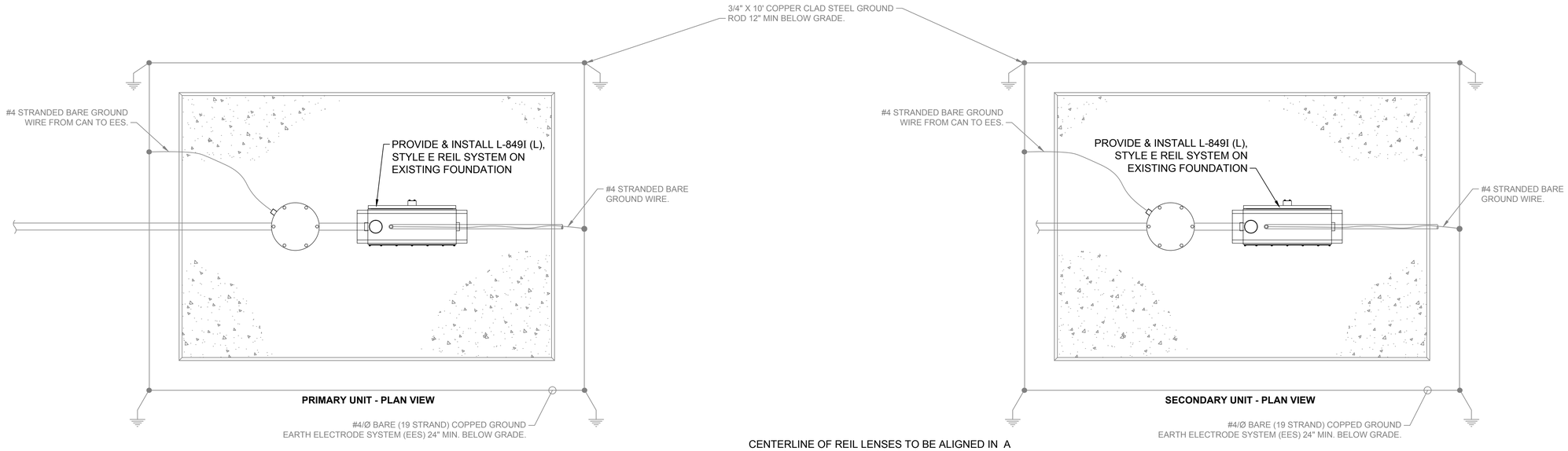

PRIMARY UNIT - PLAN VIEW

SECONDARY UNIT - PLAN VIEW

CENTERLINE OF REIL LENSES TO BE ALIGNED IN A HORIZONTAL PLANE NO GREATER THAN THREE FEET ABOVE RUNWAY THRESHOLD CENTERLINE ELEVATION. CENTERLINE OF REIL LENSES MUST NOT EXCEED THREE FEET ABOVE FINISHED GRADE.

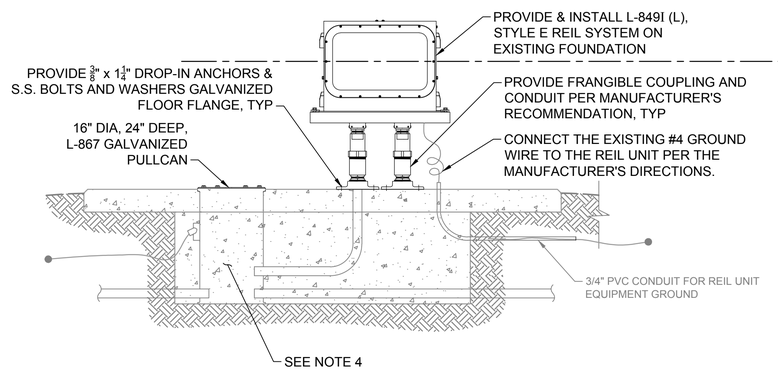

PRIMARY UNIT - FRONT ELEVATION VIEW

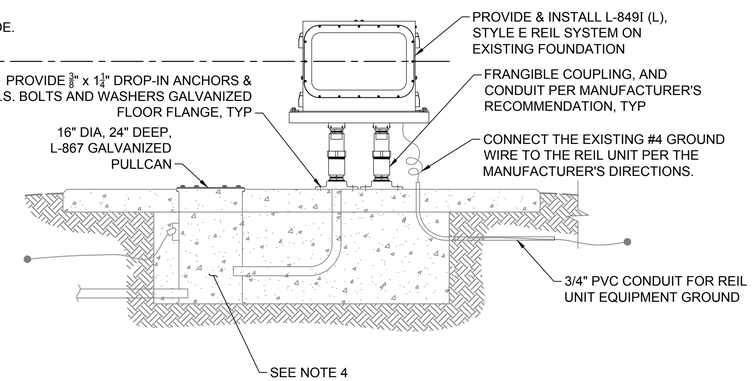

SECONDARY UNIT - FRONT ELEVATION VIEW

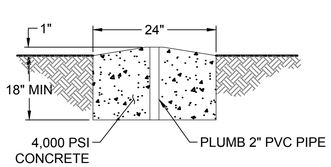

AIMING PAD

1 L.E.D. REIL DETAIL (Current Driven, 3 Step L-849E Series - Unidirectional Type)

SCALE: NTS

NOTE:

1. THE DETAILS SHOWN ON THIS SHEET ARE FOR GENERAL INFORMATION PURPOSES ONLY. CONTRACTOR SHALL COORDINATE THE REIL INSTALLATION WITH THE REIL MANUFACTURER AND PROVIDE AN INSTALLATION DRAWING FOR APPROVAL BY THE CONTRACTING OFFICER.
2. THE REIL FLASHER HEAD SHALL BE AIMED 15° OUTWARD FROM THE RUNWAY CENTERLINE AND 10° ABOVE THE HORIZONTAL. CONSTRUCT A 24" DIA. CONCRETE AIMING PAD 30 FEET ±10 FROM EACH FLASHER HEAD. EMBED A 2" SCH. 40 PVC CONDUIT AS SHOWN. PROVIDE A 3' SECTION OF 1-1/2" SCH. 40 PVC CONDUIT FOR ABOVE GROUND IDENTIFICATION.
3. THIS BID PACKAGE INCLUDES THE INSTALLATION OF THE REIL SYSTEM EQUIPMENT, REIL MOUNTING ON THE EXISTING CONCRETE FOUNDATION, POWER & CONTROL CABLES, L-830 ISOLATION TRANSFORMERS, AIMING PADS & MISCELLANEOUS ITEMS AS REQUIRED TO PROVIDE A COMPLETE OPERABLE SYSTEM.
4. PROVIDE L-830 6.6A/6.6A TRANSFORMER, L-823 CONNECTOR KITS, REIL MANUFACTURER SUPPLIED L-823 SECONDARY CORD SETS AND POWER, 2m (6.5') MINIMUM & CONTROL CABLE CONNECTIONS AS REQUIRED.

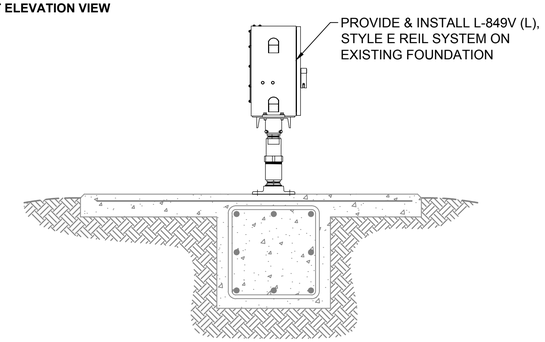

SECTION VIEW - TYPICAL FOR PRIMARY & SECONDARY UNITS

SYM	DESCRIPTION	DATE	APPR
0	ISSUED FOR BID	8 JUN 15	

NAVFAC

STATE OF TEXAS — JON M. McCALMONT — 100633 — LICENSED PROFESSIONAL ENGINEER — 8 JUN 15

SEAL

leidos
LEIDOS ENGINEERING, LLC
ONE WEST 3RD ST.
TULSA, OK 74103

DELTA AIRPORT CONSULTANTS, INC.
9711 Farrar Court, Suite 100
Richmond, Virginia 23236
phone: (804) 275-8301 • fax: (804) 275-8371
www.deltaairport.com
Delta Project No. 14072 A/E INFO

APPROVED
FOR COMMANDER NAVFAC
ACTIVITY
SATISFACTORY TO DATE
DES EFC DRW MRM CHK MWK
PROJECT MANAGER
IPT TECH. BRANCH HEAD
CHIEF ENG/ARCH (CORE)

DEPARTMENT OF THE NAVY
NAVAL FACILITIES ENGINEERING COMMAND
CIBL CORE
NAVAL FACILITIES ENGINEERING COMMAND SOUTHEAST
NAVAL AIR STATION JACKSONVILLE
NAS CORPUS CHRISTI
CORPUS CHRISTI, TEXAS
NAS CORPUS CHRISTI AIRFIELD REPAIRS
TAXIWAY 'E'
REIL DETAILS

SCALE NTS
EPROJECT NO.:
CONSTR. CONTR. NO.
NAVFAC DRAWING NO. 15095268
SHEET 140 OF 145
E-505

DRAWFORM REVISION: 5 APRIL 2012

FILE NAME: N:\14072\04 CAD_REPAIR_TWYE\1302443-E-E505.dwg LAYOUT NAME: E505 PLOTTED: Tuesday, June 09, 2015 - 10:16am USER: mrm

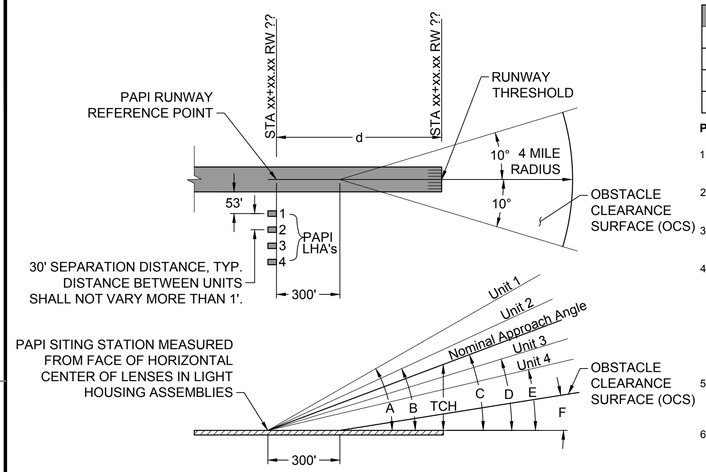

PAPI AIMING DIAGRAM (4 BOX)

RW	d(FT)	TCH(FT)	A	B	C	D	E	F
04	954	50	3° 30'	3° 10'	3° 00'	2° 50'	2° 30'	1° 50'
22	975	52	3° 30'	3° 10'	3° 00'	2° 50'	2° 30'	1° 50'
17	913	50	3° 30'	3° 10'	3° 00'	2° 50'	2° 30'	1° 50'
35	939	50	3° 30'	3° 10'	3° 00'	2° 50'	2° 30'	1° 50'

PAPI AIMING DIAGRAM NOTES:

1. DIMENSION "d" SHALL BE MEASURED FROM RUNWAY THRESHOLD TO THE HORIZONTAL CENTER OF THE FACE OF THE LENSES IN THE LIGHT HOUSING ASSEMBLIES (LHA's).
2. PAPI OFFSET DISTANCE FROM RUNWAY SHALL BE MEASURED FROM EDGE OF RUNWAY TO THE CENTER OF THE FIRST LIGHT HOUSING ASSEMBLY.
3. DISTANCE BETWEEN LIGHT HOUSING ASSEMBLY UNITS SHALL BE MEASURED FROM CENTER OF UNIT TO CENTER OF UNIT.
4. CONTRACTOR SHALL PROVIDE AN AS-BUILT CONFIRMATION SURVEY PREPARED AND SEALED BY A LICENSED SURVEYOR IN THE STATE OF INSTALLATION THAT THE PAPI OBSTACLE CLEARANCE SURFACE (OCS) IS CLEAR OF ALL OBSTACLES. THE CONTRACTING OFFICER'S DESIGNATED REPRESENTATIVE SHALL BE PRESENT WHILE THE SURVEY IS BEING CONDUCTED. A CLEAR OCS SHALL BE CONFIRMED, COMPLETED, AND COORDINATED WITH THE CONTRACTING OFFICER'S DESIGNATED REPRESENTATIVE PRIOR TO BEGINNING STAKE-OUT OR INSTALLATION. ANY OBSTACLES IDENTIFIED MAY REQUIRE THE RELOCATION OF THE PAPI AND MUST BE BROUGHT TO THE ATTENTION OF THE CONTRACTING OFFICER FOR FINAL DETERMINATION OF THE PAPI LOCATION.
5. CONTRACTOR SHALL PROPERLY AIM PAPI UNITS WITH MANUFACTURE'S SUPPLIED AIMING DEVICE (TO BE PROVIDED BY THE CONTRACTOR) AND PROVIDE MANUFACTURE'S AIMING DEVICE TO CONTRACTING OFFICER AT THE COMPLETION OF THE PROJECT.
6. WITHIN ONE WEEK OF COMPLETION OF CONSTRUCTION OF PAPI, CONTRACTOR SHALL PROVIDE AS-BUILT SURVEY OF THE PAPI TO INCLUDE PAPI RUNWAY REFERENCE POINT STATION AND THE RUNWAY THRESHOLD STATION. SURVEY SHALL BE CONDUCTED BY A LICENSED SURVEYOR IN THE STATE OF INSTALLATION.
7. INSTALLATION REQUIRES AN ACCEPTABLE FLIGHT CHECK PRIOR TO FINAL ACCEPTANCE. THE CONTRACTOR SHALL ADVISE THE CONTRACTING OFFICER WHEN THE SYSTEM IS READY FOR FLIGHT CHECK. THE CONTRACTING OFFICER WILL COORDINATE AND PAY THE COST OF THE FIRST FLIGHT CHECK. THE CONTRACTOR IS RESPONSIBLE FOR ANY SUBSEQUENT ADJUSTMENTS, COORDINATION, AND FLIGHT CHECK COSTS DUE TO THE FAULT OF THE CONTRACTOR'S INSTALLATION.
8. SAW CUT THE EXISTING SHOULDER PAVEMENT FULL DEPTH TO INSTALL THE CONCRETE MAINTENANCE PAD.
9. ADJUST LOCATION OF EES TO REMAIN 6" MAXIMUM FROM THE EXISTING EDGE OF SHOULDER PAVEMENT. DO NOT CUT & PATCH THE EXISTING SHOULDER PAVEMENT TO INSTALL THE EES.

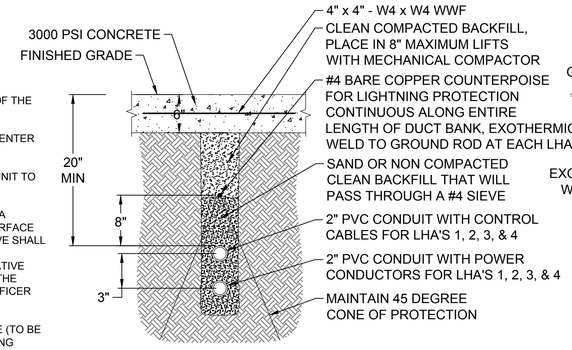

SECTION A-A

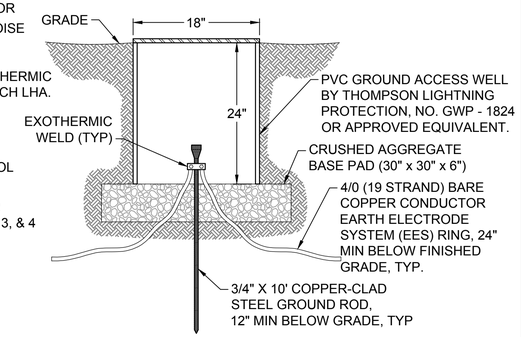

ACCESS WELL

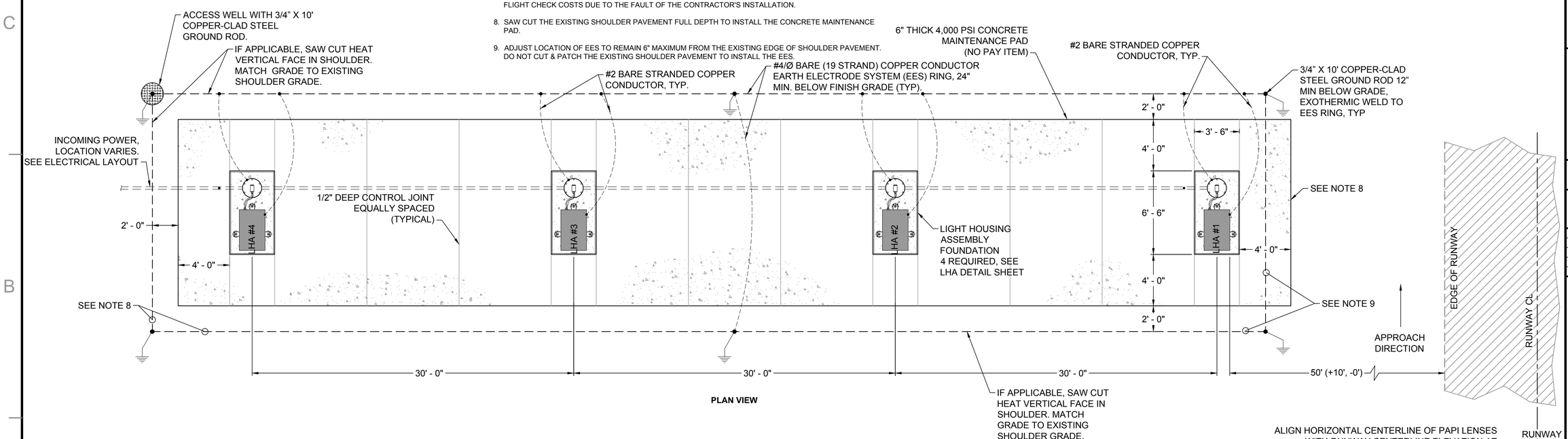

PLAN VIEW

APPROACH ELEVATION VIEW

1 L-880(L) L.E.D. PAPI LAYOUT DETAIL

SCALE: NTS

SYM	DESCRIPTION	DATE	APPR
0	ISSUED FOR BID	8 JUN 15	

NAVFAC

STATE OF TEXAS — JON M. McCALMONT — 100633 — LICENSED PROFESSIONAL ENGINEER — 8 JUN 15

SEAL

leidos
LEIDOS ENGINEERING, LLC
ONE WEST 3RD ST.
TULSA, OK 74103

DELTA AIRPORT CONSULTANTS, INC.
9711 Farrar Court, Suite 100
Richmond, Virginia 23236
phone: (804) 275-8301 • fax: (804) 275-8371
www.deltaairport.com
Delta Project No. 14072 A/E INFO

APPROVED
FOR COMMANDER NAVFAC
ACTIVITY
SATISFACTORY TO DATE
DES EFC DRW MRM CHK MWK
PROJECT MANAGER
IPT TECH. BRANCH HEAD
CHIEF ENG/ARCH (CORE)

DEPARTMENT OF THE NAVY
NAVAL FACILITIES ENGINEERING COMMAND
CBIL CORE
NAVAL FACILITIES ENGINEERING COMMAND SOUTHEAST
NAVAL AIR STATION JACKSONVILLE
NAS CORPUS CHRISTI
CORPUS CHRISTI, TEXAS
NAS CORPUS CHRISTI AIRFIELD REPAIRS
TAXIWAY 'E'
PAPI DETAILS

SCALE: NTS
EPROJECT NO.:
CONSTR. CONTR. NO.
NAVFAC DRAWING NO. 15095269
SHEET 141 OF 145
E-506

DRAWFORM REVISION: 5 APRIL 2012

FILE NAME: N:\14072\04 CAD_REPAIR_TWYE\1302443-E-E506.dwg LAYOUT NAME: E506 PLOTTED: Tuesday, June 09, 2015 - 10:16am USER: mrm

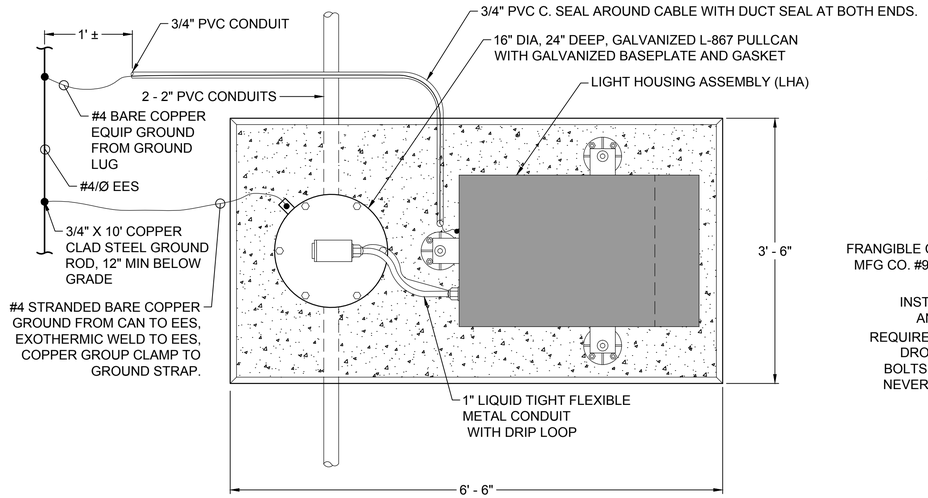

PLAN VIEW

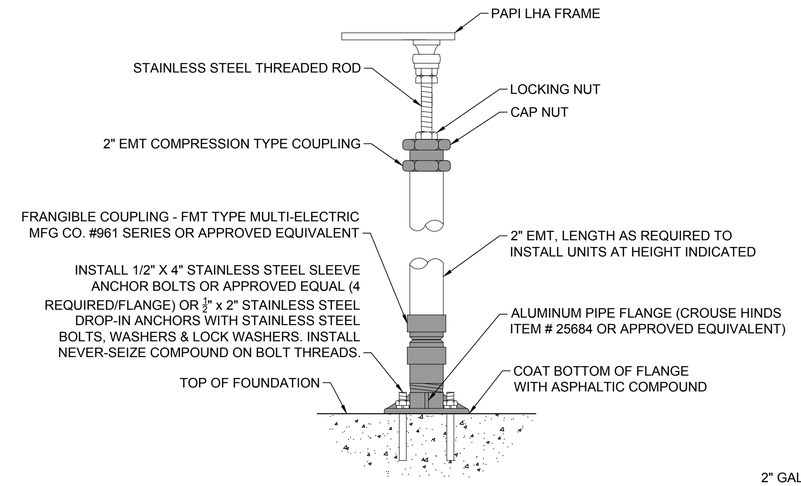

LIGHT HOUSING ASSEMBLY (LHA) STRUCTURAL LEG

PAPI LIGHT HOUSING ASSEMBLY NOTES:

1. PULLCANS SHALL BE JAQUITH LB-3 HOT DIPPED GALVANIZED 16" DIAMETER OR APPROVED EQUIVALENT.
2. APPLY ANTI-SEIZE COMPOUND TO FRANGIBLE COUPLING WHEN INSTALLING IN PIPE FLANGE.
3. CONTRACTOR SHALL REFER TO MANUFACTURER'S INSTRUCTION'S WITH REGARD TO SPECIFIC WIRING REQUIREMENTS, LOCATION OF CONDUITS, AND EQUIPMENT DIMENSIONS.
4. PROVIDE GROUNDING BUSHING WHERE CONDUITS ENTER EQUIPMENT ENCLOSURES. RUN #6 BARE COPPER FROM GROUND BUSHING(S) TO INTERNAL GROUND STRAP.
5. CONTRACTOR SHALL PROVIDE AS-BUILT DRAWINGS FOR THE PAPI LIGHT HOUSING ASSEMBLIES (LHA's) AND THEIR RESPECTIVE FOUNDATIONS.

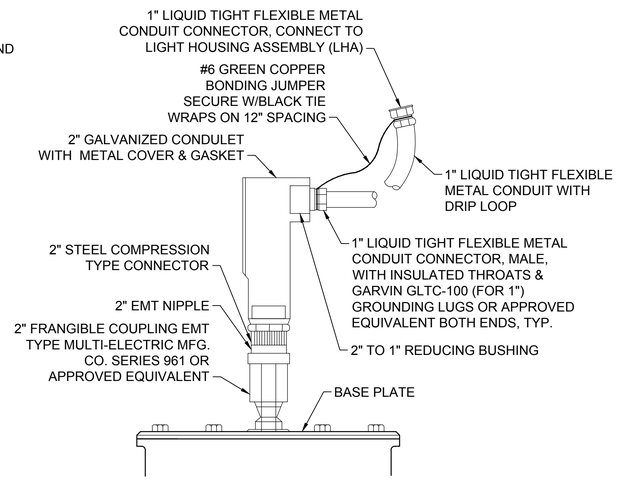

CONDULET

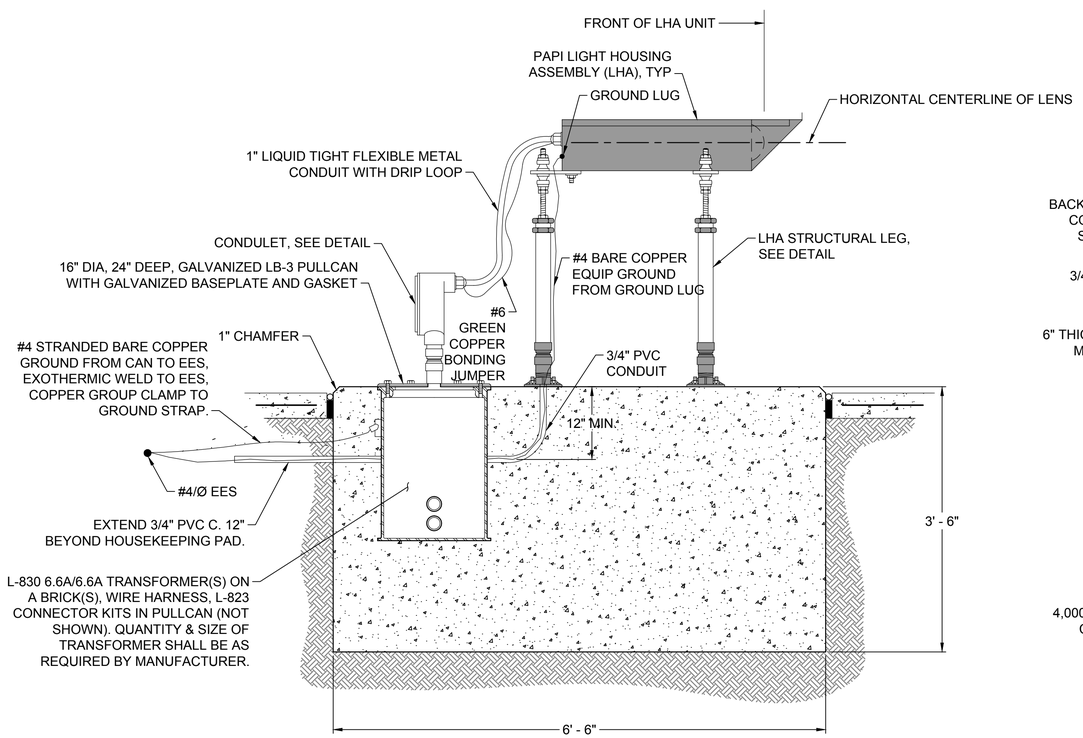

LEFT SIDE ELEVATION VIEW

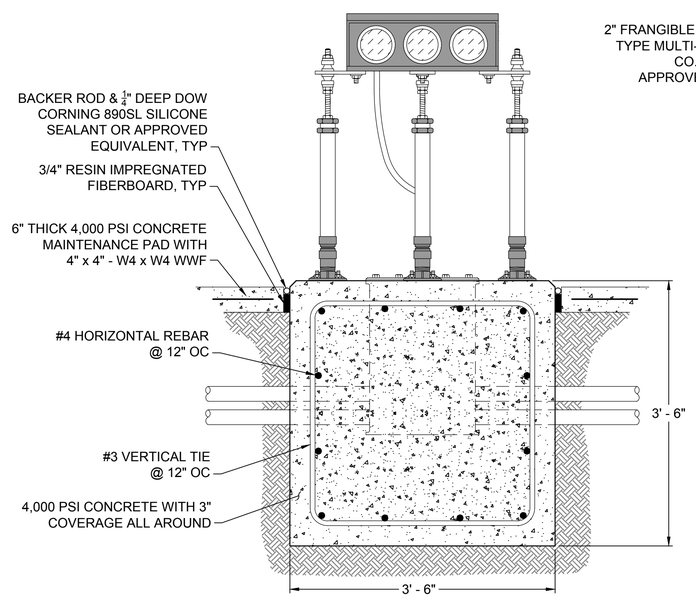

APPROACH ELEVATION VIEW

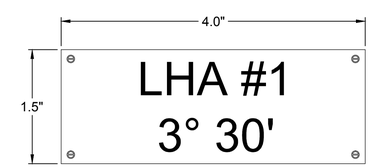

LHA IDENTIFICATION LABEL

NOTES:

1. EACH LHA SHALL HAVE AN IDENTIFICATION LABEL WITH ITS NUMBER AND AIMING ANGLE. SEE PAPI LAYOUT DRAWING FOR AIMING ANGLE OF EACH LHA.
2. ALL LHA'S SHALL BE LABELED WITH 1/2" BLACK LETTERS ON A WHITE 0.0625" MIN. RIGID ANODIZE ALUMINUM TAG BACKGROUND. PROVIDE HIGH PERFORMANCE ADHESIVE BACKING & 4-1/16" DIA. HOLES FOR MECHANICAL ATTACHMENT WITH ALUMINUM POP RIVETS.

1 PAPI LIGHT HOUSING ASSEMBLY (LHA) FOUNDATION DETAIL

SCALE: NTS

SYM	DESCRIPTION	DATE	APPR
0	ISSUED FOR BID	8 JUN 15	

NAVFAC

STATE OF TEXAS — JON M. McCALMONT — 100633 — LICENSED PROFESSIONAL ENGINEER — 8 JUN 15 — SEAL

leidos — LEIDOS ENGINEERING, LLC, ONE WEST 3RD ST., TULSA, OK 74103

DELTA AIRPORT CONSULTANTS, INC. — 9711 Forest Court, Suite 100, Richmond, Virginia 23236, phone: (804) 275-8301 • fax: (804) 275-8371, www.deltaairport.com

Delta Project No. 14072 A/E INFO

APPROVED

FOR COMMANDER NAVFAC

ACTIVITY

SATISFACTORY TO DATE

DES EFC DRW MRM CHK MWK

PROJECT MANAGER

IPT TECH. BRANCH HEAD

CHIEF ENG/ARCH (CORE)

DEPARTMENT OF THE NAVY — NAVAL FACILITIES ENGINEERING COMMAND — CIBL CORE

NAVAL FACILITIES ENGINEERING COMMAND SOUTHEAST — NAVAL AIR STATION JACKSONVILLE

NAS CORPUS CHRISTI — CORPUS CHRISTI, TEXAS

NAS CORPUS CHRISTI AIRFIELD REPAIRS TAXIWAY 'E'

PAPI DETAILS

SCALE: NTS

EPROJECT NO.:

CONSTR. CONTR. NO.

NAVFAC DRAWING NO. 15095270

SHEET 142 OF 145

E-507

DRAWFORM REVISION: 5 APRIL 2012

FILE NAME: N:\14072\04 CAD_REPAIR_TWYE\1302443-E-E507.dwg LAYOUT NAME: E507 PLOTTED: Tuesday, June 09, 2015 – 10:16am USER: mrm

SIGN SCHEDULE

DESCRIPTION			LOCATION		EQUIPMENT SPECIFICATIONS					COMMENTS
SIGN #	PANEL "A"	PANEL "B"	STATION	OFFSET	# MODULES *	STYLE	CLASS	MODE	SIZE	
1	D (Y/B) BLANK	←E (B/Y) D (Y/B)				2	1	2	2	
2	BLANK BLANK E (Y/B)	E (Y/B) Y↗ (B/Y) R→ (B/Y)				2	1	2	2	
3	←E (B/Y) R (Y/B)	R (Y/B) BLANK				2	1	2	2	
4	D (Y/B) ↖ TRANSIENT	←R (B/Y) D (Y/B) A↗ (B/Y)				2	1	2	2	
5	TRANSIENT ↗ D (Y/B)	D (Y/B) D→ (B/Y) 31R → (B/Y)				2	1	2	2	
6	D (Y/B) BLANK	↖D (B/Y) D (Y/B)				2	1	2	2	
7	E (Y/B)	←A (B/Y) E (Y/B) D→ (B/Y)				2	1	2	2	
8	↑ 31R (B/Y) A (Y/B) E→ (B/Y)	A (Y/B) BLANK				2	1	2	2	
10	CONTACT ATCT	⊖				2	1	2	2	
18	W (Y/B) WASH RACK MAX. WINGSPAN 100 FT.	W (Y/B) ←E→ (B/Y)				2	1	2	2	
19	W (Y/B) Y↑ (B/Y) Y↘ (B/Y)	WASH RACK MAX. WINGSPAN 100 FT. W (Y/B)				2	1	2	2	
21	BLANK Y (Y/B)	Y (Y/B) R↗ (B/Y) E↘ (B/Y)				2	1	2	2	
22	E (Y/B) BLANK	↙Y (B/Y) E (Y/B)				2	1	2	2	
27	Y (Y/B) BLANK	↖E (B/Y) Y (Y/B)				2	1	2	2	
28	E (Y/B) Y↗ (B/Y)	BLANK E (Y/B)				2	1	2	2	
48	BLANK	E↘ (B/Y)				3	1	2	2	
57A	≡ ≡ ≡ ≡ (B/Y)	← 17-35 → (W/R)				2	1	2	2	
57B	≡ ≡ ≡ ≡ (B/Y) E (Y/B)	E (Y/B) ↙13R-31L↗ (W/R)				3	1	2	2	
64	↖E (B/Y)	BLANK				3	1	2	2	
124	E↘ (B/Y)	BLANK				2	1	2	2	
125	≡ ≡ ≡ ≡ (B/Y) E (Y/B)	E (Y/B) 13L-31R (W/R)				3	1	2	2	
129	BLANK	↖E (B/Y)				3	1	2	2	
132	BLANK	↖E (B/Y)				3	1	2	2	
133	E↘ (B/Y)	BLANK				2	1	2	2	
134	≡ ≡ ≡ ≡ (B/Y) E (Y/B)	E (Y/B) 31R-13L (W/R)				2	1	2	2	
135	E (Y/B) BLANK BLANK	↙Y (B/Y) ←R (B/Y) E (Y/B)				2	1	2	2	
136	Y (Y/B) ↖E↘ (B/Y)	Y (Y/B)				2	1	2	2	
137	↙R (B/Y) Y (Y/B)	Y (Y/B) BLANK				2	1	2	2	
138	R (Y/B) E→ (B/Y) Y↘ (B/Y)	R (Y/B) C↑ (B/Y) D→ (B/Y)				2	1	2	2	

* ESTIMATE - COORDINATE WITH SIGN MANUFACTURER ON EXACT NUMBER OF MODULES

REFERENCE INFORMATION FROM A/C 150/5345-44H "SPECIFICATIONS FOR RUNWAY AND TAXIWAY SIGNS (28 SEP 07)"

STYLE 1 = 120 VAC
STYLE 2 = 3 STEPS 4.8-6.6 AMPS
STYLE 3 = 5 STEPS 2.8 - 6.6 AMPS OR 8.5 - 20.0 AMPS
STYLE 4 = UNLIGHTED
STYLE 5 = 1 STEP 5.5 AMPS
CLASS 1 = OPERATING TEMPERATURE FROM -4F (-20C) TO +131F (55C)
CLASS 2 = OPERATING TEMPERATURE FROM -40F (-40C) TO +131F (55C)
MODE 1 = WIND LOADING TO 100 MPH
MODE 2 = WIND LOADING TO 200 MPH
MODE 3 = WIND LOADING TO 300 MPH
SIZE 1 = 18" HIGH PANEL WITH 12" CHARACTER
SIZE 2 = 24" HIGH PANEL WITH 15" CHARACTER
SIZE 3 = 30" HIGH PANEL WITH 18" CHARACTER
SIZE 4 = 48" HIGH PANEL WITH 40" CHARACTER
SIZE 5 = 30" HIGH PANEL WITH 25" CHARACTER

LOCATION GUIDE

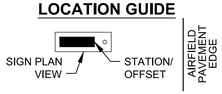

SIGN COLOR LEGEND

W - WHITE
R - RED
B - BLACK
Y - YELLOW
O - OBSCURED
G - GREEN
C - CLEAR

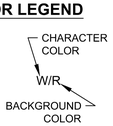

ELECTRICAL NOTES:

1. THE LOCATION OF ALL UTILITIES SHOWN IS APPROXIMATE ONLY AND SHALL BE FIELD VERIFIED BY THE CONTRACTOR BEFORE BEGINNING CONSTRUCTION. NOT ALL UTILITIES ARE NECESSARILY SHOWN.
2. THE CONTRACTOR SHALL LOCATE ALL UTILITIES DURING CONSTRUCTION, AND HAND DIG WHEN WITHIN THREE (3) FEET OF ANY KNOWN OR SUSPECTED UNDERGROUND UTILITY.
3. ALL CABLES SHALL BE TAGGED AT EACH CONNECTION AND AT EACH ENTRANCE TO ALL DUCTS AND HANDHOLES AND PULL CANS. CABLE TAGS SHALL BE ALMETEK MINI-TAGS KIT WITH BLACK STAMPED YELLOW POLYETHYLENE LETTERS OR APPROVED EQUIVALENT. ATTACH TAGS WITH CABLE TIES.
4. ALL ELECTRICAL WORK SHALL BE COMPLETED IN ACCORDANCE WITH LOCAL CODE AND CURRENT NEC HANDBOOK.
5. THE CONTRACTOR SHALL MANUALLY LOCK OUT EACH CIRCUIT AT THE VAULT WHEN WORK IS BEING PERFORMED ON THE CIRCUIT. THE CIRCUIT SHALL BE TAGGED AND THE CONTRACTOR'S NAME SHALL BE CLEARLY IDENTIFIED ON EACH TAG. THE CONTRACTOR SHALL HAVE A LOCK OUT KIT ON SITE AT ALL TIMES. THE CONTRACTING OFFICER'S DESIGNATED REPRESENTATIVE SHALL BE NOTIFIED EACH TIME A CIRCUIT IS SECURED AND EACH TIME THE CIRCUIT IS RETURNED TO OPERATIONAL STATUS. THE CONTRACTOR MUST BE CERTIFIED AND TRAINED BY THE CONTRACTING OFFICER'S DESIGNATED REPRESENTATIVE PRIOR TO PERFORMING WORK OR LOCK-OUT PROCEDURES IN THE ELECTRICAL VAULT.
6. ALL UNDERGROUND CONDUITS SHALL BE PVC, SCHEDULE 40, UNLESS OTHERWISE NOTED. ALL UNDERGROUND CONDUITS SHALL BE UL APPROVED. ALL UNDERGROUND CONDUIT BENDS SHALL BE LONG RADIUS ANGLES.
7. WHERE CONDUIT IS TO BE CONNECTED TO EXISTING CONDUIT, THE CONTRACTOR SHALL MAKE THE CONNECTION USING MANUFACTURED COUPLINGS.
8. FIELD LOCATE EXISTING DUCTS WHICH WILL BE UTILIZED FOR THIS PROJECT. APPROXIMATE LOCATIONS ARE SHOWN.
9. RUNWAY AND/OR TAXIWAY LIGHTS SHALL BE DE-ENERGIZED OR PROPERLY COVERED ON ALL CLOSED SEGMENTS OF RUNWAY(S) AND TAXIWAY(S).
10. THE CONTRACTOR SHALL FIELD STAKE ALL LIGHTS AND AIRFIELD SIGNS, PRIOR TO INSTALLATION. ANY DISCREPANCIES IN ALIGNMENT OR LOCATION SHOULD BE RESOLVED PRIOR TO INSTALLATION. THE LOCATION OF ALL HOLD LINES SHALL BE CONFIRMED PRIOR TO INSTALLATION OF THE SIGNS. .
11. THE LOCATIONS OF ALL P.T.'S SHOWN ON THE PLANS ARE APPROXIMATE AND SHALL BE FIELD VERIFIED AND APPROVED BY THE CONTRACTING OFFICER'S DESIGNATED REPRESENTATIVE.
12. ALL SIGNS SHALL BE INSTALLED PERPENDICULAR TO THE RUNWAY OR TAXIWAY CENTERLINE, UNLESS NOTED DIFFERENTLY ON THE PLANS. PRIOR TO INSTALLING THE SIGN FOUNDATION, THE CONTRACTOR SHALL VERIFY THE NUMBER OF MODULES AND/OR LENGTH OF EACH SIGN WITH THE MANUFACTURER TO ACCOMMODATE THE SIGN LEGEND/DESCRIPTION.
13. ALL PULLCANS SHALL HAVE A 1/2" THICK COVER PLATE WITH COUNTER BORE HOLES AND TWO OPPOSITE HOLES (0,180) TAPPED 1/2" - 13. ALL COVER PLATES SHALL BE HOT DIPPED GALVANIZED AFTER FABRICATION. AT THE END OF THE PROJECT, THE CONTRACTOR SHALL TURN OVER TO THE CONTRACTING OFFICER FOUR (4) 1/2"-13 EYEBOLTS.
14. PROVIDE TXDOT APPROVED HIGH EARLY STRENGTH CONCRETE (CALCIUM ALUMINATE CEMENT) FOR PHASED CONSTRUCTION. HIGH EARLY STRENGTH CONCRETE MUST ACHIEVE A MINIMUM OF 70% DESIGN STRENGTH PRIOR TO REOPENING A RUNWAY OR TAXIWAY.
15. COORDINATE (AT LEAST 72 HOURS IN ADVANCE) ANY INTERRUPTION OF SERVICE TO ACTIVE LIGHTING CIRCUITS WITH THE CONTRACTING OFFICER. ANY DAMAGE TO EXISTING AIRPORT CIRCUITS CAUSED BY THE CONTRACTOR'S EQUIPMENT OR PERSONNEL SHALL BE PROMPTLY REPAIRED, BY THE CONTRACTOR, AT THE CONTRACTOR'S EXPENSE. ALL ACTIVE LIGHTING SYSTEMS FOR OPEN AIRCRAFT OPERATIONAL AREAS (AOA) SHALL REMAIN READY FOR OPERATION DURING IFR WEATHER CONDITIONS AND FROM DUSK TO DAWN.
16. PRIOR TO CONSTRUCTION, THE CONTRACTOR SHALL INVENTORY ALL LIGHTS, FIXTURES, SIGNS, ETC., WITHIN THE PROJECT LIMITS. THE CONTRACTOR SHALL ADVISE THE CONTRACTING OFFICER, IN WRITING, OF ANY DAMAGED LIGHT FIXTURES, SIGNS, OR UTILITIES PRIOR TO THE BEGINNING OF CONSTRUCTION.
17. FOR LIGHTING CIRCUITS REMAINING IN OPERATION, THE CONTRACTOR SHALL MEGGAR THE EXISTING LIGHTING CIRCUIT PRIOR TO BEGINNING WORK AND AT THE END OF EACH DAY'S WORK. THIS WORK SHALL BE PERFORMED IN THE PRESENCE OF THE CONTRACTING OFFICER'S DESIGNATED REPRESENTATIVE AND LOGGED IN THE DAILY REPORT. IF THERE IS A DROP IN THE MEGGARED CIRCUIT VALUES, THE CONTRACTOR SHALL DETERMINE THE LOCATION OF THE PROBLEM AT THE CONTRACTOR EXPENSE. IF THE PROBLEM IS DUE TO THE CONTRACTOR'S WORK, THE APPLICABLE CIRCUITS SHALL BE PROMPTLY REPAIRED AT THE CONTRACTOR'S EXPENSE TO THE SATISFACTION OF THE CONTRACTING OFFICER.
18. THE CONTRACTOR SHALL HAVE A TONE GENERATOR TYPE CABLE TRACER ON SITE AT ALL TIMES TO LOCATE EXISTING CABLES.
19. THE CONTRACTOR MAY BE REQUIRED TO CONNECT THE CIRCUITS TO THE EXISTING CIRCUITS IN ACCORDANCE WITH THE PHASING PLAN. ALL WORK REQUIRED TO MAKE THE CONNECTIONS TO THE EXISTING CIRCUITS SHALL BE INCIDENTAL TO THE PROJECT (I.E., PUNCHING INTO EXISTING MANHOLES, LIGHT BASES, JUNCTION STRUCTURES FOR CONDUITS).
20. ALL GROUND RODS AND OTHER UNDERGROUND GROUNDING CONNECTIONS SHALL BE EXOTHERMICALLY WELDED, UNLESS OTHERWISE NOTED. EXOTHERMIC CONNECTIONS SHALL BE IN ACCORDANCE WITH MANUFACTURER'S GUIDELINES. THE COUNTERPOISE SYSTEM SHALL BE CONNECTED WITH THE EXISTING SYSTEM AT ALL CROSSING POINTS.
21. EXISTING LIGHTING FIXTURES REMOVED SHALL REMAIN THE PROPERTY OF THE GOVERNMENT AND STORED AT THE AIRPORT AT A LOCATION AS ORDERED BY THE CONTRACTING OFFICER UNLESS OTHERWISE NOTED. EXISTING 20A/6.6A L-830 ISOLATION TRANSFORMERS REMOVED SHALL BE DISPOSED OF OFF-SITE IN A LAWFUL MANNER.
22. AT THE BEGINNING OF THE PROJECT, THE CONTRACTOR SHALL FURNISH THE CONTRACTING OFFICER WITH TWO (2) COPIES OF ALL MANUFACTURERS' INSTALLATION INSTRUCTIONS FOR ALL EQUIPMENT.
23. AT THE PROJECT COMPLETION, THE CONTRACTOR SHALL PROVIDE A FOUR (4) HOUR MINIMUM TRAINING SESSION FOR AIRPORT MAINTENANCE PERSONNEL. THE SESSION SHALL COVER ALL INSTALLED EQUIPMENT.
24. AT THE PROJECT COMPLETION, THE CONTRACTOR SHALL PROVIDE A COMPLETE MAINTENANCE MANUAL BOUND IN A THREE-RING NOTEBOOK. THE MANUAL SHALL CONTAIN THE FOLLOWING AS A MINIMUM:
    - AS-BUILT WIRING SCHEMATICS
    - EQUIPMENT SHOP DRAWINGS SUBMITTALS
    - MANUFACTURERS' EQUIPMENT INSTALLATION INSTRUCTIONS
    - MANUFACTURERS' MAINTENANCE INSTRUCTIONS
    - WARRANTIES
    - SPARE PARTS LISTS
25. SPLICES SHALL BE MADE ONLY AT OUTLETS, JUNCTION BOXES OR ACCESSIBLE RACEWAY. ALL SPLICES IN MANHOLES AND PULLCANS SHALL BE L-823 CONNECTOR KITS, 3M SKOTCHCAST EPOXY RESIN KIT OR APPROVED EQUIVALENT.
26. ANTI-SEIZE COMPOUND SHALL BE APPLIED TO ALL PULLCAN, LIGHT BASE & EXTERIOR JUNCTION BOX BOLTS.
27. UNLESS OTHERWISE NOTED, ALL BACKFILL MATERIAL AND COMPACTION SHALL BE AS SPECIFIED IN CONTRACT DOCUMENTS.

SYM	DESCRIPTION	DATE	APPR
0	ISSUED FOR BID	8 JUN 15	

NAVFAC

STATE OF TEXAS
JON M. McCALMONT
100633
LICENSED PROFESSIONAL ENGINEER
8 JUN 15
SEAL

leidos
LEIDOS ENGINEERING, LLC
ONE WEST 3RD ST.
TULSA, OK 74103

DELTA AIRPORT CONSULTANTS, INC.
9711 Farrar Court, Suite 100
Richmond, Virginia 23236
phone: (804) 275-8301 • fax: (804) 275-8371
www.deltairport.com
Delta Project No. 14072 A/E INFO

APPROVED
FOR COMMANDER NAVFAC
ACTIVITY
SATISFACTORY TO DATE
DES EFC DRW MRM CHK MWK
PROJECT MANAGER
IPT TECH. BRANCH HEAD
CHIEF ENG/ARCH (CORE)

DEPARTMENT OF THE NAVY
NAVAL FACILITIES ENGINEERING COMMAND
CIBL CORE
NAVAL FACILITIES ENGINEERING COMMAND SOUTHEAST
NAVAL AIR STATION JACKSONVILLE
NAS CORPUS CHRISTI
CORPUS CHRISTI, TEXAS
NAS CORPUS CHRISTI AIRFIELD REPAIRS
TAXIWAY 'E'
SIGN SCHEDULE

SCALE: NTS
EPROJECT NO.:
CONSTR. CONTR. NO.
NAVFAC DRAWING NO.
15095271
SHEET 143 OF 145
E-701

DRAWFORM REVISION: 5 APRIL 2012

FILE NAME: N:\14072\04 CAD_REPAIR_TWY\1302443--E-701.dwg LAYOUT NAME: E701 PLOTTED: Tuesday, June 09, 2015 - 10:16am USER: mrm

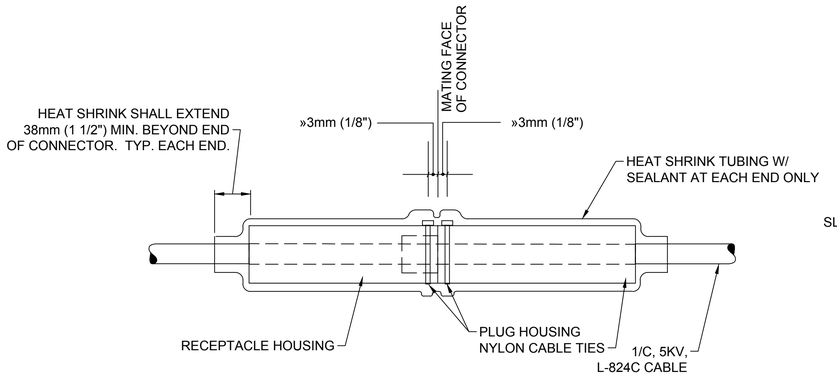

1 FIELD ATTACHED PLUG-IN SPLICE FAA TYPE L-823

SCALE: NTS

NOTES:

1. INTERIOR PIN AND SOCKETS ARE NOT SHOWN FOR CLARITY.
2. ATTACH EACH CABLE TIE »3mm (1/8") FROM THE MATING FACE OF THE CONNECTOR HOUSING. TIGHTEN CABLE TIE ENOUGH TO HOLD IN PLACE WITHOUT COMPRESSING HOUSING. A COMPLETELY TRIM OFF EXCESS CABLE TIE.
3. INSTALLATION OF L-823 AND HEAT SHRINK TUBING SHALL BE IN STRICT CONFORMANCE WITH MANUFACTURERS REQUIREMENTS.

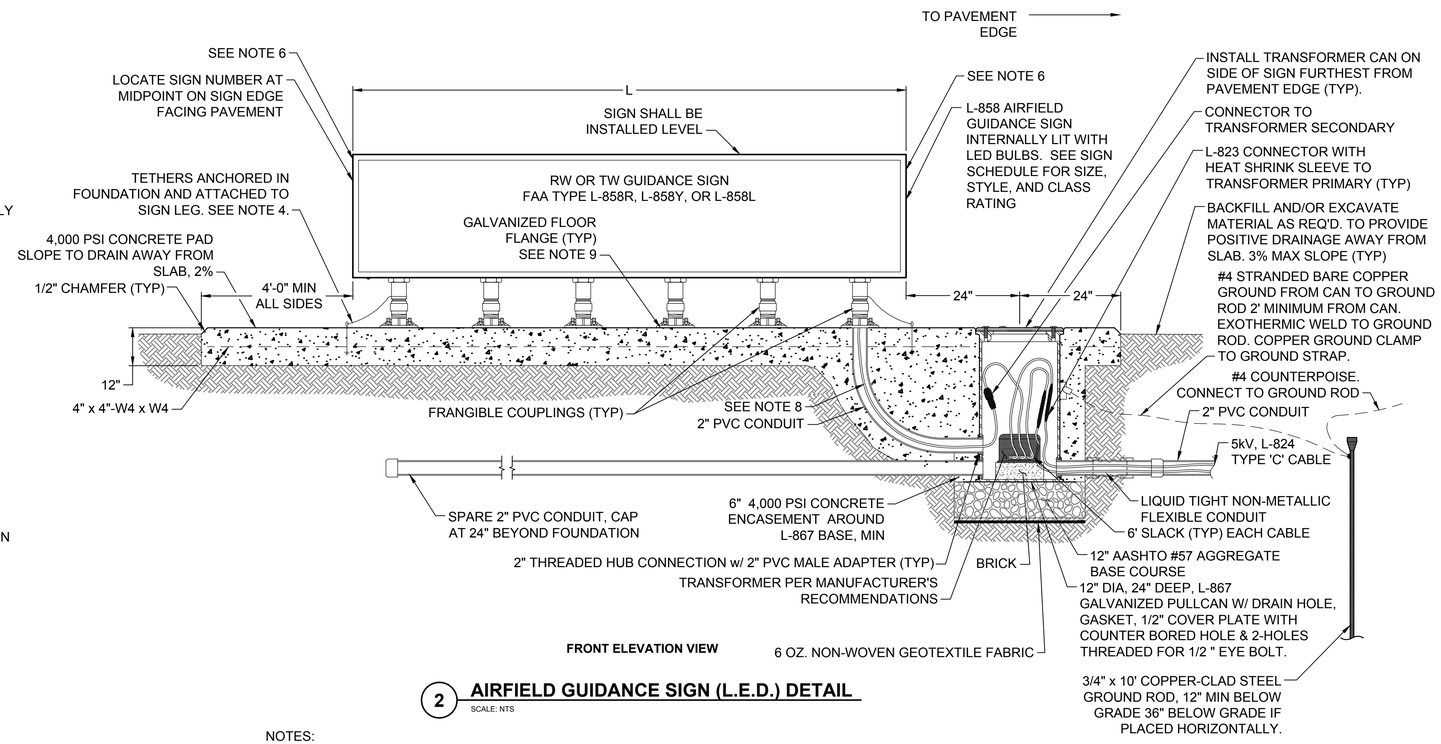

2 AIRFIELD GUIDANCE SIGN (L.E.D.) DETAIL

SCALE: NTS

NOTES:

1. PROVIDE A L-823 DISCONNECT PLUG & RECEPTACLE IN THE FRANGIBLE COUPLING OF THE POWER LEG AS REQUIRED.
2. ALL CONDUIT UNDER THE CONCRETE PAD IS INCIDENTAL TO THE COST OF THE AIRFIELD GUIDANCE SIGN.
3. ORIENT THE INTERNAL POWER LUGS OF THE AIRFIELD GUIDANCE SIGN SO THAT THEY WILL BE CLOSEST TO THE LEG THROUGH WHICH THE POWER ENTERS THE SIGN HOUSING.
4. PROVIDE MINIMUM TWO (2) TETHER PER SIGN (AT ENDS).
5. INSTALL CONCRETE SIGN PAD LEVEL IN TURF SHOULDERS AND INSTALL CONCRETE SIGN PAD AT THE SAME GRADE AS PAVED SHOULDER. IN PAVED SHOULDERS, ADJUST SIGN LEGS TO LEVEL SIGN.
6. INSTALL LIGHT FIXTURE ID TAG FACING PAVEMENT EDGE (SEE DETAIL). USE 4 STAINLESS STEEL SELF TAPPING SCREWS TO SECURE TAG TO SIGN FACE.
7. FASTEN FLOOR FLANGE TO CONCRETE WITH 3/8" DIA. x 1-5/8" LONG MIN. DROP-IN ANCHORS. PROVIDE STAINLESS STEEL BOLTS WITH A STAINLESS STEEL FLAT AND LOCK WASHER. INSTALL NEVER SEIZE COMPOUND ON THE THREADS OF EACH BOLT.
8. PROVIDE A L-823 EXTENSION CORD (5' (1.5m) MIN.) AND A CABLE CLAMP AT THE JUNCTION BETWEEN THE END OF THE 2" PVC CONDUIT AND THE FLOOR FLANGE.
9. PRIOR TO SECURING THE SIGN TO THE CONCRETE FOUNDATION, APPLY AN APPROVED BITUMINOUS MASTIC MATERIAL TO THE BOTTOM OF EACH FLOOR FLANGE.

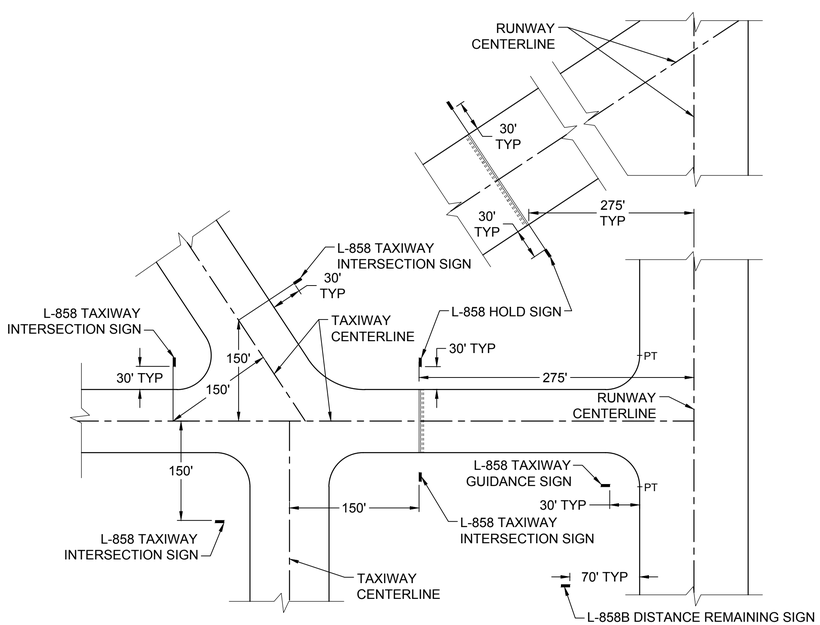

3 TYPICAL SIGN LAYOUT DETAIL

SCALE: NTS

NOTE:

1. ALL TAXIWAY TO TAXIWAY INTERSECTION SIGNS SHALL BE COLLOCATED PERPENDICULAR TO THE TAXIWAY CENTERLINE AT THE POINT 150 FEET FROM THE INTERSECTING TAXIWAY CENTERLINE, OR AS SHOWN ON THE PLANS.

SYM	DESCRIPTION	DATE	APPR
0	ISSUED FOR BID	8 JUN 15	

NAVFAC

STATE OF TEXAS — JON M. McCALMONT — 100633 — LICENSED PROFESSIONAL ENGINEER — 8 JUN 15 — SEAL

leidos — LEIDOS ENGINEERING, LLC, ONE WEST 3RD ST., TULSA, OK 74103

DELTA AIRPORT CONSULTANTS, INC. — 9711 Forror Court, Suite 100, Richmond, Virginia 23236 — phone: (804) 275-8301 • fax: (804) 275-8371 — www.deltaairport.com — Delta Project No. 14072 A/E INFO

APPROVED

FOR COMMANDER NAVFAC

ACTIVITY

SATISFACTORY TO DATE

DES EFC | DRW MRM | CHK MWK

PROJECT MANAGER

IPT TECH. BRANCH HEAD

CHIEF ENG/ARCH (CORE)

DEPARTMENT OF THE NAVY — NAVAL FACILITIES ENGINEERING COMMAND — NAVAL FACILITIES ENGINEERING COMMAND SOUTHEAST — CIRL CORE

NAVAL AIR STATION JACKSONVILLE — NAS CORPUS CHRISTI — CORPUS CHRISTI, TEXAS

NAS CORPUS CHRISTI AIRFIELD REPAIRS TAXIWAY 'E'

SIGN DETAILS

SCALE: NTS

EPROJECT NO.:

CONSTR. CONTR. NO.

NAVFAC DRAWING NO. 15095272

SHEET 144 OF 145

E-702

DRAWFORM REVISION: 5 APRIL 2012

FILE NAME: N:\14072\04 CAD_REPAIR_NWE\132443-E-E702.dwg LAYOUT NAME: E702 PLOTTED: Tuesday, June 09, 2015 - 10:16am USER: mrm

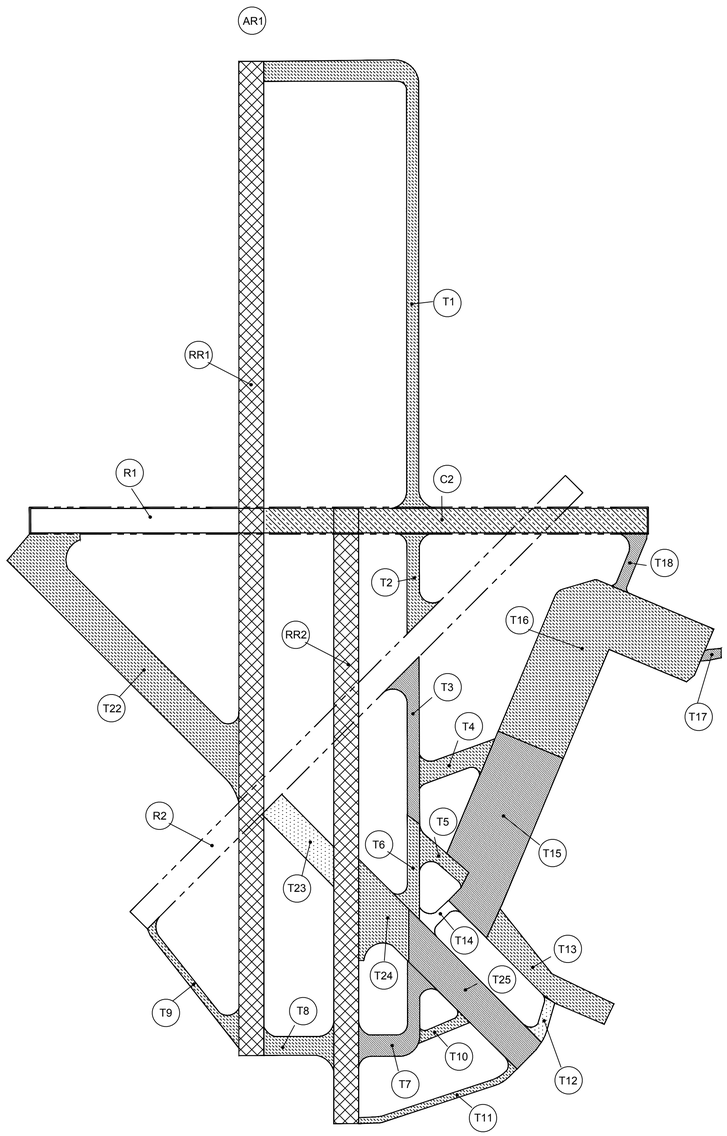

EXISTING AIRFIELD CONTROL CONFIGURATION - 29 CIRCUITS (BEFORE RWY 4-22)

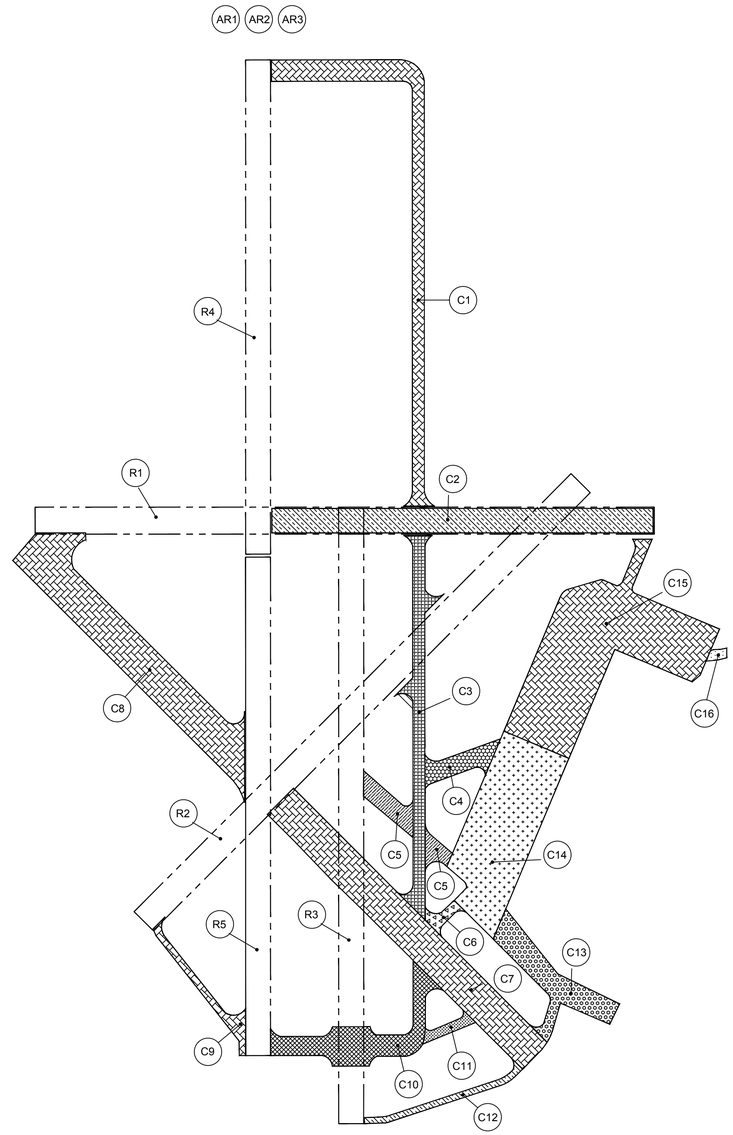

AIRFIELD CONTROL CONFIGURATION - AFTER PHASE 1

SYM	DESCRIPTION	DATE	APPR
0	ISSUED FOR BID	8 JUN 15	

NAVFAC

STATE OF TEXAS
JON M. McCALMONT
100633
LICENSED PROFESSIONAL ENGINEER
8 JUN 15
SEAL

leidos
LEIDOS ENGINEERING, LLC
ONE WEST 3RD ST.
TULSA, OK 74103

DELTA AIRPORT CONSULTANTS, INC.
9711 Forrer Court, Suite 100
Richmond, Virginia 23236
phone: (804) 275-8301 • fax: (804) 275-8371
www.deltaairport.com
Delta Project No. 14072 A/E INFO

APPROVED
FOR COMMANDER NAVFAC
ACTIVITY
SATISFACTORY TO DATE
DES EFC DRW MRM CHK MWK
PROJECT MANAGER
IPT TECH. BRANCH HEAD
CHIEF ENG/ARCH (CORE)

DEPARTMENT OF THE NAVY
NAVAL FACILITIES ENGINEERING COMMAND
CIBL CORE
NAVAL FACILITIES ENGINEERING COMMAND SOUTHEAST
NAVAL AIR STATION JACKSONVILLE
NAS CORPUS CHRISTI
CORPUS CHRISTI, TEXAS
NAS CORPUS CHRISTI AIRFIELD REPAIRS
TAXIWAY 'E'
REHABILITATE EXISTING L-830 TRANSFORMER PLAN

SCALE: NTS
EPROJECT NO.:
CONSTR. CONTR. NO.
NAVFAC DRAWING NO.
15095273
SHEET 145 OF 145
E-703
DRAWFORM REVISION: 5 APRIL 2012

FILE NAME: N:\14072\04 CAD_REPAIR_TWY\E\320443-E-E703.dwg LAYOUT NAME: E703 PLOTTED: Tuesday, June 09, 2015 - 10:17am USER: mrm