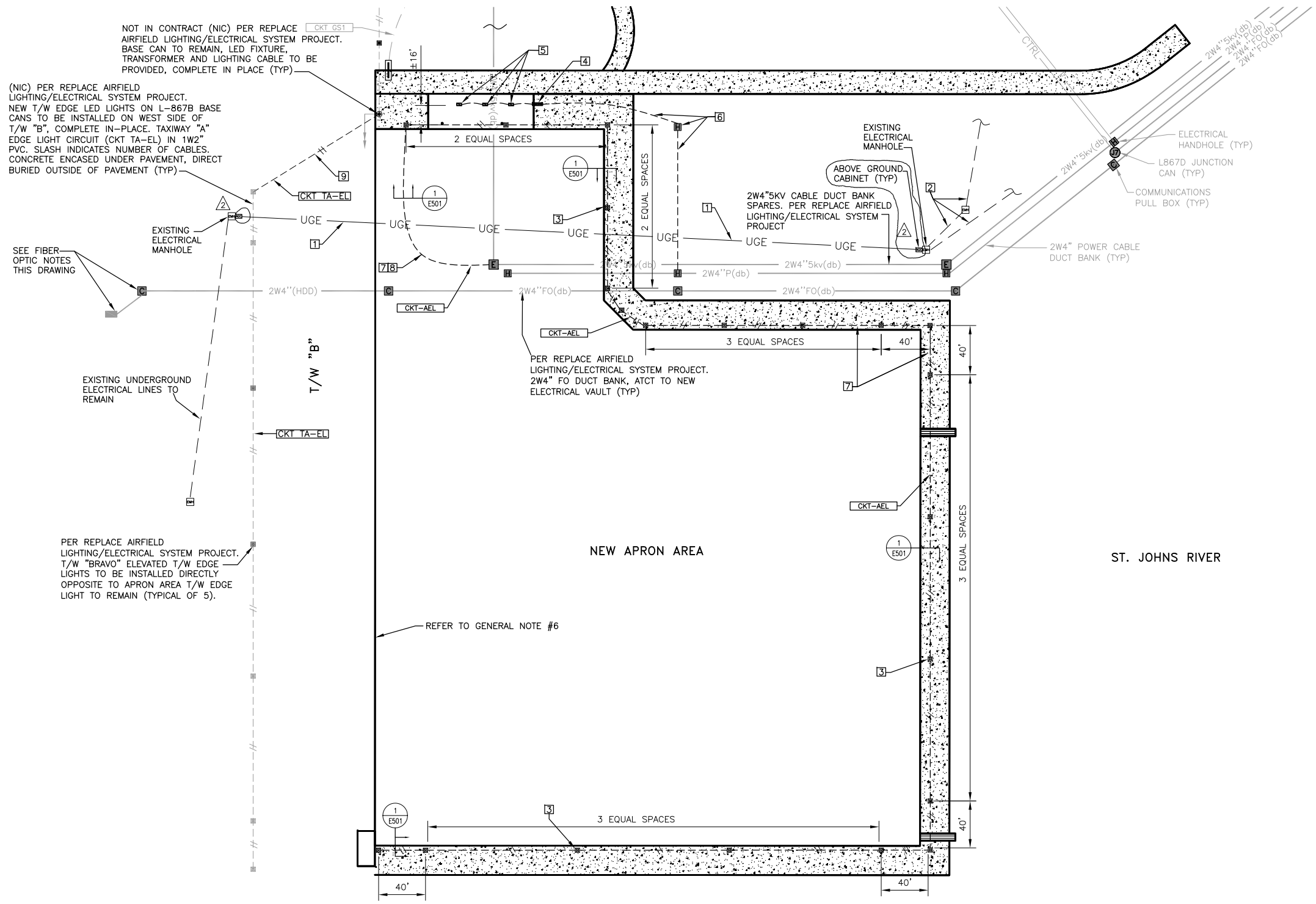

1 APRON EDGE LIGHTING PLAN
Scale: 1" = 50'

PLAN NORTH

ELECTRICAL NOTES

1. RE-ROUTE PRIMARY ELECTRICAL LINE 2-5" PVC CONDUIT IN CONCRETE ENCASED DUCT BANK. PROVIDE 3#500kCM, 133%, EPR WITH 1/3 CONCENTRIC NEUTRAL. PROVIDE 600V LOW BREAK ELBOW IN ABOVE GROUND LOW PROFILE SWITCH SPLICE CABINET. CABINET TO INCLUDE GROUND FAULT INDICATOR IN EVERY PHASE LINE. TOTAL HEIGH OF CABINET SHALL NOT EXCEED 16 INCHES IN HEIGHT. 2
2. EXISTING UNDERGROUND ELECTRICAL LINES TO REMAIN.
3. NEW APRON EDGE L-861 LIGHTING IN L-867 NON-LOAD BEARING BASE CAN (TYP OF 21). REFER TO DETAIL 2/E501.
4. PROVIDE NEW CLASS 1, DIV 2 ELECTRICAL ENCLOSURE WITH TWO SINGLE 20A, 277V ENCLOSED CIRCUIT BREAKERS. COORDINATE ELECTRICAL CONNECTION, FROM NEW AIRFIELD BUILDING VAULT TO THIS PANELBOARD. ONE 20A SHALL FEED A NEW STORM WATER SHUTOFF VALVE AND ANOTHER 20A SHALL FEED THE NEW FLOODLIGHTS THROUGH A TOGGLE SWITCH. PROVIDE A 20A, HEAVY DUTY TOGGLE SWITCH IN A CLASS 1/ DIV 2 ENCLOSURE TO CONTROL FLOODLIGHTS. ENCLOSURE AND TOGGLE SWITCH SHALL BE WITHIN 16 INCHES FROM GROUND LEVEL. 2
5. AREA FLOODLIGHTS, CLASS 1, DIV 2, HAZARDOUS LOCATIONS, 125W LED MOUNTING HEIGHT NOT TO EXCEED 3 FEET.
6. PROVIDE 2/C NO. 8 AWG 5KV CKT-AEL THROUGH NEW HANDHOLE TO SUPPLY NEW APRON EDGE PERIMETER LIGHTS. CKT-AEL SHALL HOMERUN TO NEW ELECTRICAL VAULT.
7. PROVIDE 2/C NO. 8 AWG 5KV, CKT-AEL. SLASH INDICATES NUMBER OF CABLES.
8. CKT-AEL (APRON EDGE LIGHTS) SHALL BE CONNECTED TO FUTURE CCR SWITCHGEAR #2 LOCATED INSIDE THE NEW AIRFIELD VAULT PROVIDED BY THE AIRFIELD LIGHTING/ELECTRICAL SYSTEM PROJECT. PROVIDE CONNECTION TO CCR BAY #7 UPPER SECTION. PROVIDE 3-STEP INTENSITY CONTROL. REFER TO PAGE EA435 OF THE AIRFIELD PROJECT FOR LOCATION OF NEW AIRFIELD VAULT.
9. RE-ROUTE CKT TA-EL, PROVIDED BY THE AIRFIELD PROJECT. PROVIDE COORDINATION BETWEEN BOTH PROJECT. RE-ROUTING SHALL BE THROUGH DIRECT BORING. EXCAVATION IS PROHIBITED.

GENERAL NOTES

1. REFER TO PAGE E602 OF THE REPLACE AIRFIELD LIGHTING/ELECTRICAL SYSTEM PROJECT BY URS, FOR MORE INFORMATION ON NEW CCR SWITCHGEAR.
2. REFER TO THE REPLACE AIRFIELD LIGHTING/ELECTRICAL SYSTEM PROJECT BY URS, FOR MORE INFORMATION ON THE ELECTRICAL INFRASTRUCTURE AND OVERALL INFORMATION IN THE NEW AIRFIELD VAULT.
3. CLASS 1, DIVISION 2 AREA SHALL CONSIST OF 20 FEET RADIO FROM WHERE THE FUEL PANTOGRAPH SUPPLY WILL BE LOCATED.
4. ALL LIGHTS SHALL BE CONTROLLED FROM THE CONTROL TOWER AND FROM THE LIGHTING EQUIPMENT VAULT.
5. THREE STEP INTENSITY LIGHTS SHALL BE PROVIDED PER UFC-3-535-01, AS FOLLOWS:

INTENSITY STEP	PERCENT OF FULL INTENSITY
1	10%
2	20%
3	100%

6. NOTE: COORDINATE WITH FUTURE PROJECT "REPLACE AIRFIELD LIGHTING/ELECTRICAL SYSTEM", THE DEMOLITION OF ANY FUTURE TAXI WAY LIGHTING PROVIDED THAT MAY BE IN CONFLICT WITH THIS PROJECT.

GRAPHIC SCALE

1"=50' 0' 50' 100' 150' 200' 250'

SUBMITTAL TITLE
SUBMITTAL DATE

SYM	DESCRIPTION	DATE	APPR
2	ABOVE GROUND SPLICE CABINET LOCATION & NOTES #1 & #4	----	----

SEAL

A/E INFO

APPROVED

FOR COMMANDER NAVFAC / B.L.T.L.

ACTIVITY

--

SATISFACTORY TO DATE --

DES RO DRW RO CHK RHF

PROJECT MANAGER S. LOVE

IPT TECH. BRANCH HEAD J. WARD

CHIEF ENG/ARCH (CORE) R.H. FLORES

DEPARTMENT OF THE NAVY
NAVAL FACILITIES ENGINEERING COMMAND
IPT SOUTH ATLANTIC
NAVAL AIR STATION JACKSONVILLE
NAVAL FACILITIES ENGINEERING COMMAND SOUTHEAST
NAVAL AIR STATION JACKSONVILLE
JACKSONVILLE, FLORIDA

MH-60 APRON AND REPAIRS

APRON AREA POWER PLAN

SCALE: SCALE
EPROJECT NO.: 1291637
CONSTR. CONTR. NO. N69450-XX-C-XXXX
NAVFAC DRAWING NO. 15092015
SHEET 41 OF 44
EP101

DRAWFORM REVISION: 7 AUGUST 2009

FILE NAME: P:\CBL\project_files\FLORIDA\nas jacksonville fl\h\h00207\664-mh-60 apron and repair-1291637\working technical files\Drawings\Sheet\EP101 APRON AREA POWER PLAN.dwg LAYOUT NAME: EP101 APRON AREA POWER PLAN PLOTTED: Tuesday, March 03, 2015 - 2:43pm USER: rolando.ortiz

SHEET FORMAT IS 22" X 34". IF PRINTED SHEET IS NOT 22" X 34", THEN IT IS NOT TO SCALE

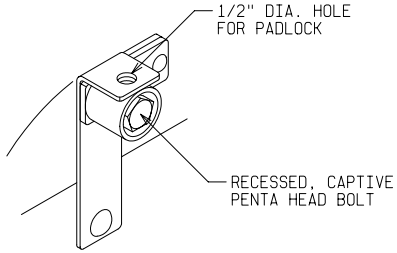

LATCH DETAIL
TWO PLACES

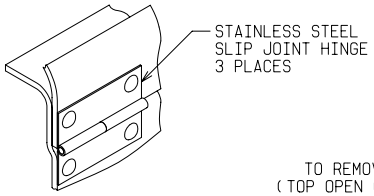

HINGE DETAIL
(TOP CLOSED)

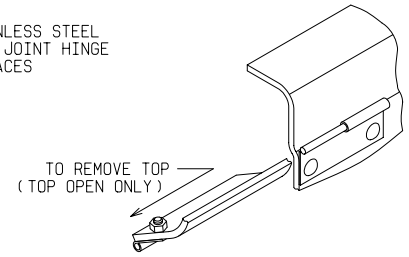

HINGE DETAIL
(TOP OPEN)

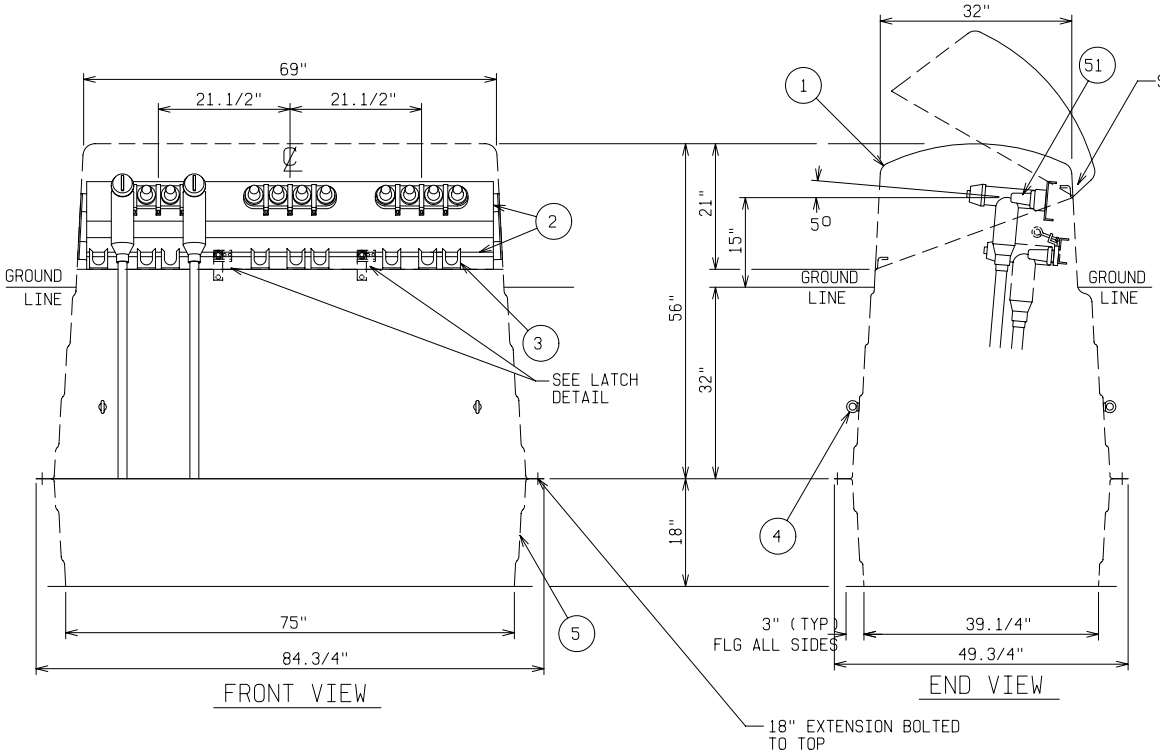

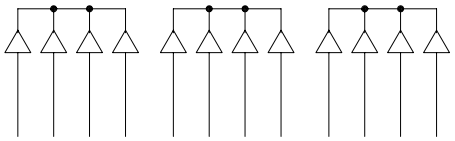

SCHEMATIC

MATERIAL LIST - STANDARD UNIT

ITEM	DESCRIPTION
1	POWER DESIGN INC MODEL NO CJP-41-56-L2-WG FIBERGLASS CABLE JUNCTION PEDESTAL - STANDARD LIGHT GREEN
2	ALUMINUM JUNCTION MOUNTING BAR AND PARKING CLIP MOUNTING RAILS
3	(9) ADJUSTABLE LOCATION STAINLESS STEEL PARKING CLIPS
4	GALVANIZED LIFTING EYE - FOUR PLACES
5	18" FIBERGLASS SUB-BASE MODEL NO CJP-41-18-MB-WG

OPTIONAL EQUIPMENT

52	600 AMP DEADBREAK JUNCTION - 35KV - 150KV BIL - SPECIFY MANUFACTURER AND 2,3 OR 4-WAY

NOTE:

1. MATERIAL:
   1) FIBERGLASS LAMINATE 1/4" NOMINAL THICKNESS
   2) EXTERIOR UV STABILIZED GELCOAT - 14 MIL NOMINAL THICKNESS
   3) FIRE RETARDANT - DOES NOT SUPPORT COMBUSTION
   4) STAINLESS STEEL HARDWARE
2. MOUNTING BAR WILL WITHSTAND A MINIMUM 400 LB. LOADING TO INSTALL OR REMOVE ELBOWS.

CATALOG NO: CJP-41-56-L2-WG-1584

DEADFRONT CABLE JUNCTION PEDESTAL

35KV 600 AMP 150KV BIL

THREE PHASE 2, 3, OR 4-WAY JUNCTION

POWER DESIGN INC.
ODELL, OREGON

DRAWN:	PAGE	DATE	DRAWING NO.
BB		1-19-99	1584

FILE REF:

POWER DESIGN INC.

Subject: Certification of Physical Properties of a Standard Production Sample of FRP

A standard production FRP sample, approximately 2' x 2', nominal thickness of 3/16", and gel coated on one side, was tested to ASTM standards with the following results:

Tensile Strength	ASTM D638	11,120 psi
Flexural Strength	ASTM D790	25,380 psi
Flexural M.O.E.	ASTM D790	1.182×10^6
Compressive Strength	ASTM D695	23,980 psi
Charpy Impact Strength	ASTM D256	4.6 ft lbs./in
Impact Resistance	ASTM D2444	46 in lbs.
Water Absorption (24hr)	ASTM D570	0.092 %
Flammability	ANS Z124.2	self-ext'g, Non-burning

Ultraviolet stabilization is provided by a nominal 14-mil exterior gelcoat finish.

Power Design Inc.

Eric R. Cederstam
President

POWER DESIGN INC.

11/10/98

Subject: Certification of Conformance with ANSI C57.12.28 for Cable Junction Pedestal (Model CJP)

Testing per ANSI C57.12.28 was performed on standard production models of the CJP-10 and CJP-30 cable junction pedestals. Tests covering the enclosure security were performed on units buried and backfilled to the recommended goundline. The access lid was closed and locked with a combination of a padlock and a pentahead bolt. The tests were performed in the specified sequence and at the specified values.

There was no structural damage to the pedestals from any the tests. The probing wire was unable to enter the pedestals following either the pry or pull tests. After all tests had been performed, the pedestals were unlocked and opened, then closed and locked. Both units were found to be operating correctly with no damage.

The enclosure coating system was tested to several ASTM standards by taking panels of the above pedestals and performing the specified tests. The following are the results:

Salt Spray Test – ASTM B117

1500 Hours
Scribed into FRP
5% salt spray

Results: Loss of Adhesion – None
Underfilm Corrosion – None

Crosshatch Adhesion Test – ASTM D3359

Method A
Scribed in FRP

Results: Loss of Adhesion – None

Humidity Test – ASTM D2247

1000 Hours
45° C

Results: Blistering – None (10)

Impact Test – ASTM D2794

160 in-lbs.

Results: Chipping – None

POWER DESIGN INC.

Oil Resistance Test –

72 Hours
25° C

Results: Color Change – None
Blistering – None (10)
Loss of Hardness – None (still 3H+)
Streaking – None

Oil Resistance Test –

72 Hours
100° C

Results: Color Change – None
Blistering – None (10)
Loss of Hardness – None (still 3H+)
Streaking – None

Ultraviolet Accelerated Weathering Test – ASTM G53

500 Hours
55° C

Results: Original Gloss – 88
Final Gloss - 81

Abrasion Resistance Test – ASTM D4060

3000 cycles

Results: Original Coating – 14 Mils
Final Coating – 9 Mils

Power Design Inc. certifies that the models CJP-10 and CJP-30 cable junction pedestals meet or exceed ANSI C57.12.28.

Power Design Inc.

Eric R. Cederstam
President

POWER DESIGN INC.

CABLE JUNCTION PEDESTALS

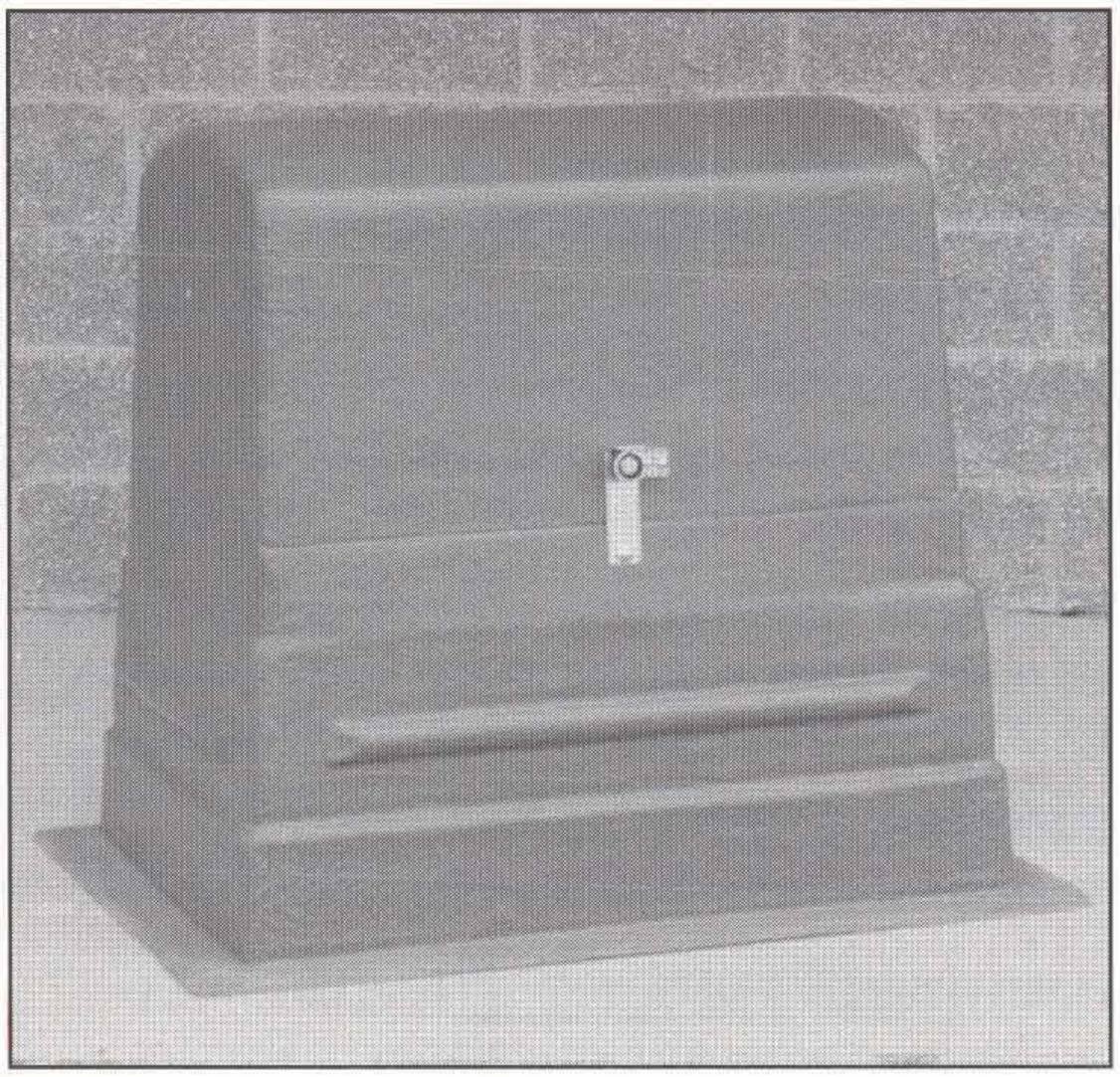

(Model No. CJP-10-39-L2-MG)

BENEFITS:

- **FIBERGLASS CONSTRUCTION**
  Strong, light weight, and corrosion-free.
- **STAINLESS STEEL HARDWARE**
  Complete corrosion-proof unit.
- **UV STABILIZED GELCOAT**
  Protects structural integrity.
  Willow green or munsell green.
- **STAINLESS STEEL/ALUMINUM MOUNTING ASSEMBLIES**
  Accommodates all manufactures.
- **FIRE RETARDANT FIBERGLASS**
  Does not support combustion.
- **MEETS INDUSTRY STANDARDS**
  ANSI C57.12.28 Pad-mounted Enclosure Integrity Standard.
- **REA ACCEPTED**

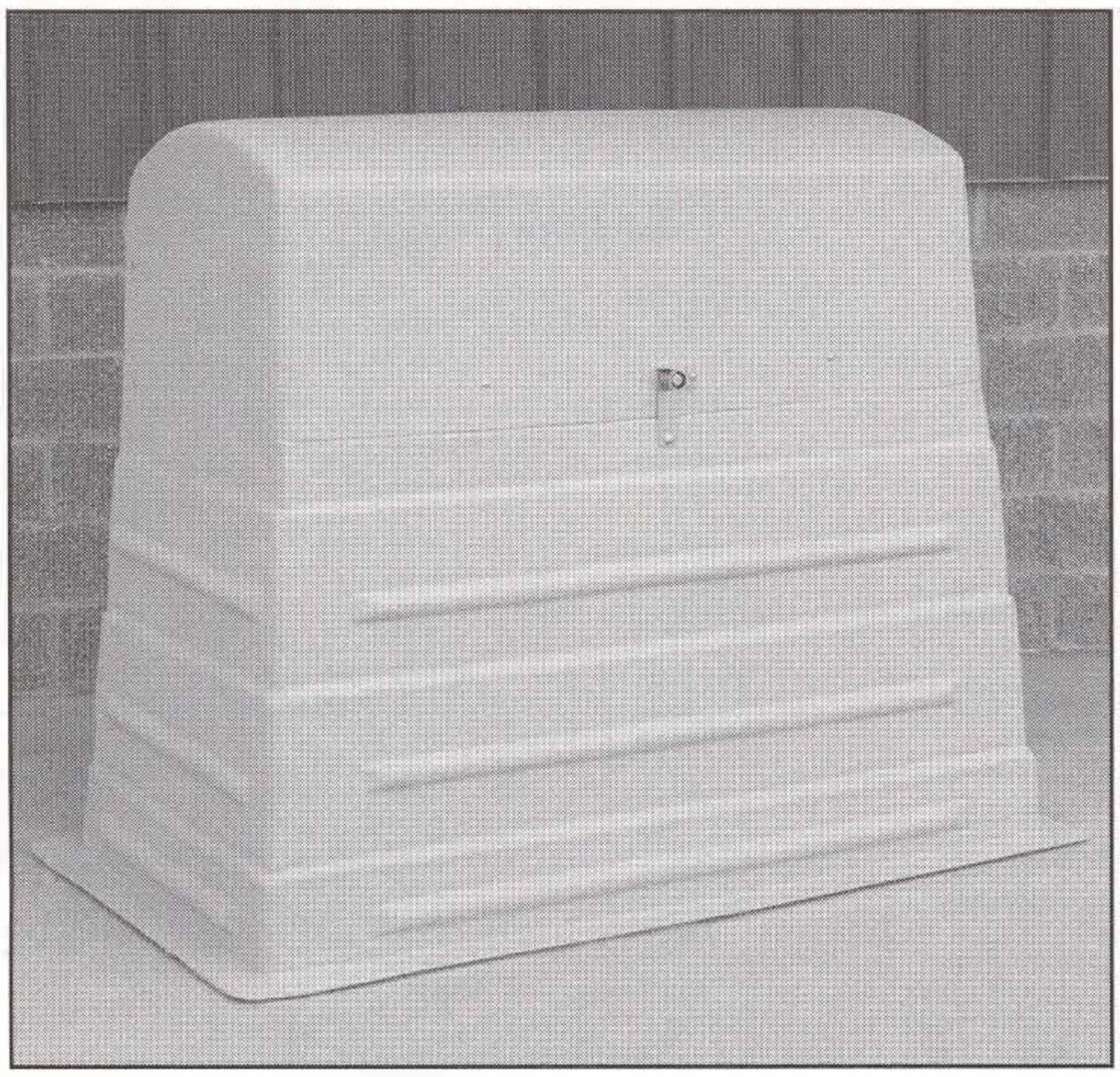

(Model No. CJP-30-56-L2-WG)

RATINGS:

- 15KV - 25KV - 35KV
- 200A - 600A
- Accepts 2-way, 3-way or 4-way 200A junctions at 15KV - 25KV - 35KV. All manufactures.
- Accepts 2-way, 3-way or 4-way 600A junctions at 15KV - 25KV - 35KV. All manufacturers.
- Accepts 600/200A (piggy back) deadfront junction arrangements at 15KV & 25KV.

ORDERING INFORMATION:

EXAMPLE

CJP-31-41-L2-WG-2415-GB2

Options

- CJP — Cable Junction Pedestal
- 31 — Model See Dwg's
- 41 — Overall Height
- L2 — Penta Bolt with padlock provision
- WG — Willow Green - WG; Munsell Green - MG
- 2 — 2-200A; 6-600A
- 4 — 2-2-WAY; 3-3-WAY; 4-4-WAY
- 15 — 15-15KV; 25-25KV; 35-35KV
- GB2 — GB2 - #2CU ground bar; GB38 - 3/8 Cu ground bar

NOTE: Special mounting bar required when using 600A junctions. Consult Factory.

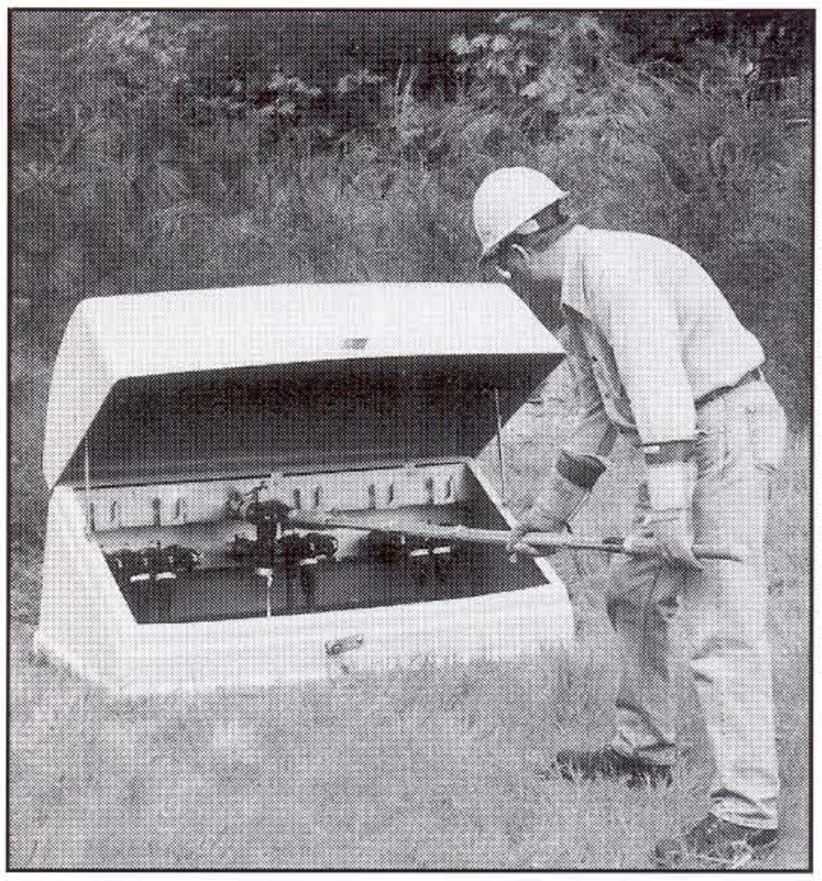

DIMENSIONS: Three phase 15/25/35 KV

MODEL	OVERALL HEIGHT A	OVERALL WIDTH B	OVERALL DEPTH C	MAX BURIAL DEPTH D	APPROX SHIP WGT
CJP-30-41	41"	66 3/4"	40 3/4"	19"	200#
CJP-30-50	50"	68 3/4"	42 3/4"	28"	220#
CJP-30-56	56"	69 1/4"	43 1/4"	34"	240#
CJP-40-41	41"	81 1/4"	46 1/4"	19"	260#
CJP-40-50	50"	83 3/4"	48 1/4"	28"	290#
CJP-40-56	56"	84 3/4"	49 3/4"	34"	310#

TOP DEPTH = 27"
TOP WIDTH = 55"
15/25 KV

TOP DEPTH = 32"
TOP WIDTH = 69"
35 KV

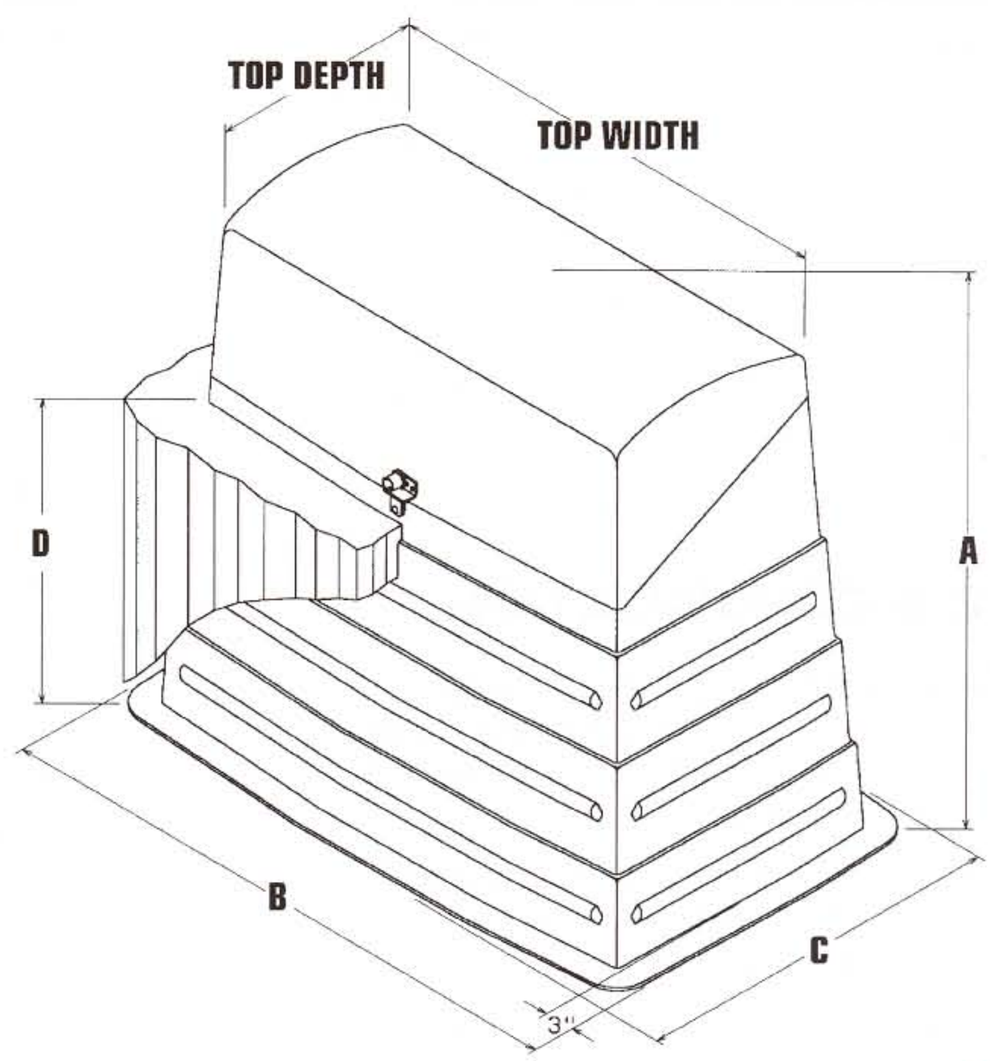

NOTE: CJP-30 and CJP-31 Models have same dimensions

POWER DESIGN INC.

STANDARD DESIGN FEATURES:

CJP-30 with S.S. adjustable parking clips, aluminum mounting bar, and S.S. name tag including date on front lip. Options include 200A, 3-way, 15 KV junctions (-2315) and 3/8" copper ground bar (-GB38)

UNIQUE STEP DESIGN for additional strength in the ground.

GROUND LUGS are standard on mounting plate and accommodate up through 2/0 stranded wire. Special arrangements available upon request.

JUNCTION MOUNTING is available with parking clips above, below or in-line on 3Ø units. Parking clips are mounted below or in-line on 1Ø units.

REMOVABLE TOP in the "full open" position by the use of stainless steel slip joint hinges.

ADJUSTABLE PARKING STANDS on 3Ø units for minimum cable movement.

DIMENSIONS: Single Phase 15/25/35 KV

MODEL	OVERALL HEIGHT A	OVERALL WIDTH B	OVERALL DEPTH C	MAX BURIAL DEPTH D	APPROX SHIP WGT
CJP-10-33	33"	44 1/2"	34"	13"	95#
CJP-10-39	39"	45 1/4"	34 3/4"	19"	110#
CJP-10-49	49"	47 1/4"	36 3/4"	29	130#
CJP-10-54	54"	48 3/4"	38 1/4"	34"	140#
CJP-11-33	33"	36 1/2"	34"	13"	85#
CJP-11-39	39"	37 1/4"	34 3/4"	19"	100#
CJP-11-49	49"	39 1/4"	36 3/4"	29	120#
CJP-11-54	54"	40 3/4"	38 1/4"	34"	130#
CJP-15-33	33"	54 1/2"	40 1/4"	13"	145#
CJP-15-39	39"	55 1/4"	41"	19"	165#
CJP-15-49	49"	57 1/4"	43"	29	190#
CJP-15-54	54"	58 3/4"	44 1/4"	34"	210#

TOP DEPTH = 32 1/2"
TOP WIDTH = 22"
15/25 KV

TOP DEPTH = 24 1/2"
TOP WIDTH = 22"
15/25 KV

TOP DEPTH = 43"
TOP WIDTH = 28"
35 KV

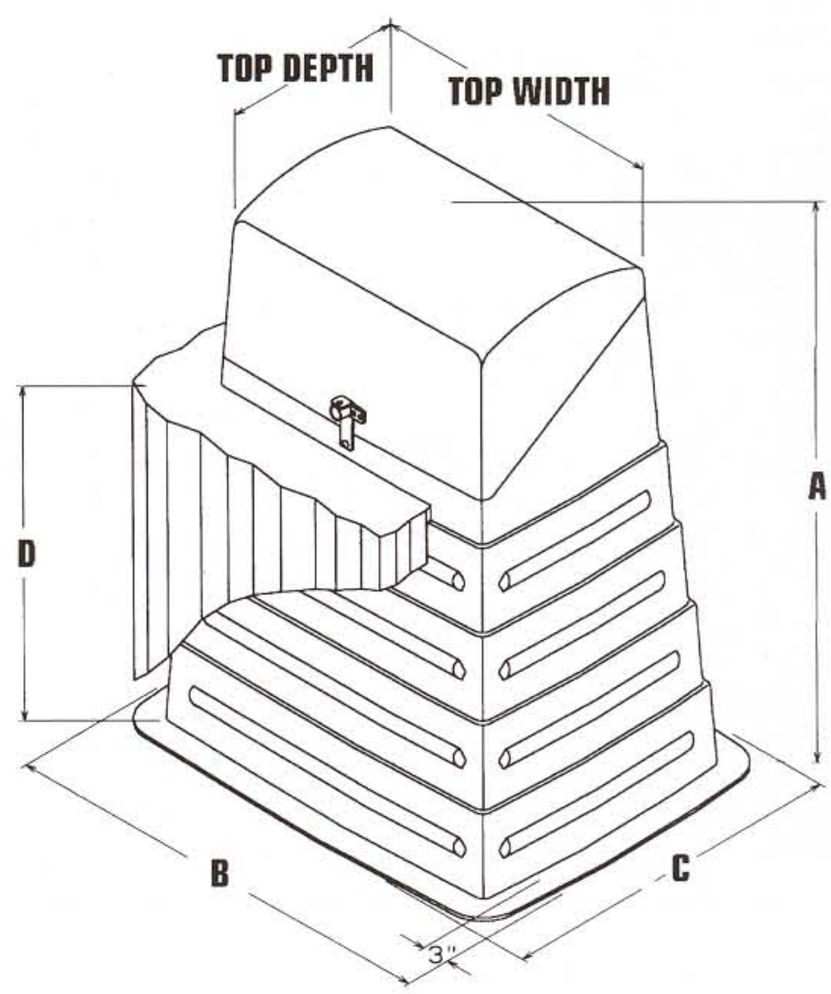

POWER DESIGN INC.

P.O. Box 147, Odell, OR 97044

TEL: 541-354-3222
FAX: 541-354-3366

DETAILS:

LOCK includes stainless steel swing arm and latch with captive ½" stainless penta head bolt and padlock provisions.

HINGE includes stainless steel slip joint hinge and tamper-proof bolts. Allows top to be easily removed in the "full open" position.

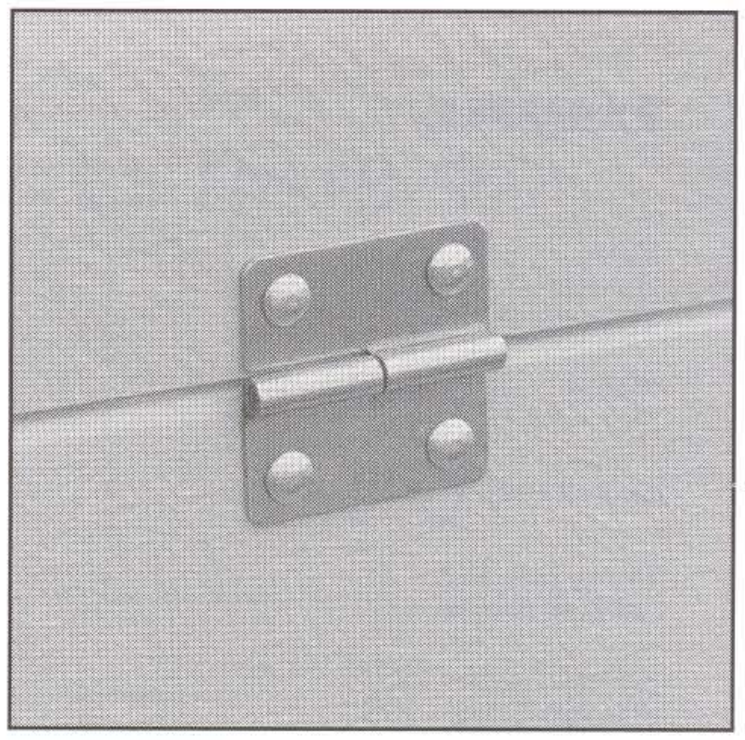

SPECIFICATIONS:

1.0 SCOPE

This specification applies to single and three phase, fully deadfront, sectionalizing pedestals; with maximum ratings of 600 amps continuous current and 35KV nominal voltage. For use with industry standard deadfront junction modules and elbows conforming to ANSI/IEEE 386. Unit shall be designed for direct burial with the junction modules mounted above the ground line. Pedestals shall be in complete conformance with ANSI C57.12.28, Pad-mounted Equipment Enclosure Integrity Standard.

2.0 CONSTRUCTION

2.1 Fiberglass laminate shall be 3/16" nominal thickness except where local reinforcement is required.

2.2 Fiberglass shall not support combustion and be self extinguishing.

2.3 Pedestal exterior shall be gel-coated to .014 inch nominal thickness and be manufacturer's standard willow (or munsell) green color.

2.4 Locking device shall provide both a captive penta head bolt and padlocking provisions.

2.5 All interior and exterior hardware, along with junction mounting assemblies, shall be made of 304 stainless steel or 6061-T6 aluminum. Parking clips shall be made of 14 GA SS minimum.

2.6 A stainless steel identification plate shall be affixed inside the pedestal which identifies the manufacturer, model number of the equipment, and date of manufacture.

2.7 Access top shall have two solid SS slip joint hinges for rigid support and to allow easy field disassembly of cover. Pin diameter shall be 1/4" minimum.

2.8 Top shall be supported by 3/16" x 3/4" SS support bars which will secure the top in the open position against accidental closing. The latch action shall be automatic and require a simple pulling action to disengage.

2.9 There shall be (1) transformer type ground lug on the mounting bar which will accommodate thru a 2.0 ground wire.

3.0 TESTING & STANDARDS

3.1 The pedestal assembly shall be able to withstand a 400 pound pull on any bushing out along its axis without damage or distortion.

3.2 Certified test data for the structural standards of the finished laminate shall be made available upon request.

3.3 The pedestal shall meet or exceed ANSI C57.12.28, Pad-mounted Equipment Enclosure Integrity Standard.

Terms and conditions of sale of products and warranties shall be in accordance with Power Design, Inc. Standard Terms and Conditions of Sale, which are available upon request.