MH-60 APRON AND REPAIRS

NAVAL AIR STATION JACKSONVILLE
JACKSONVILLE, FLORIDA

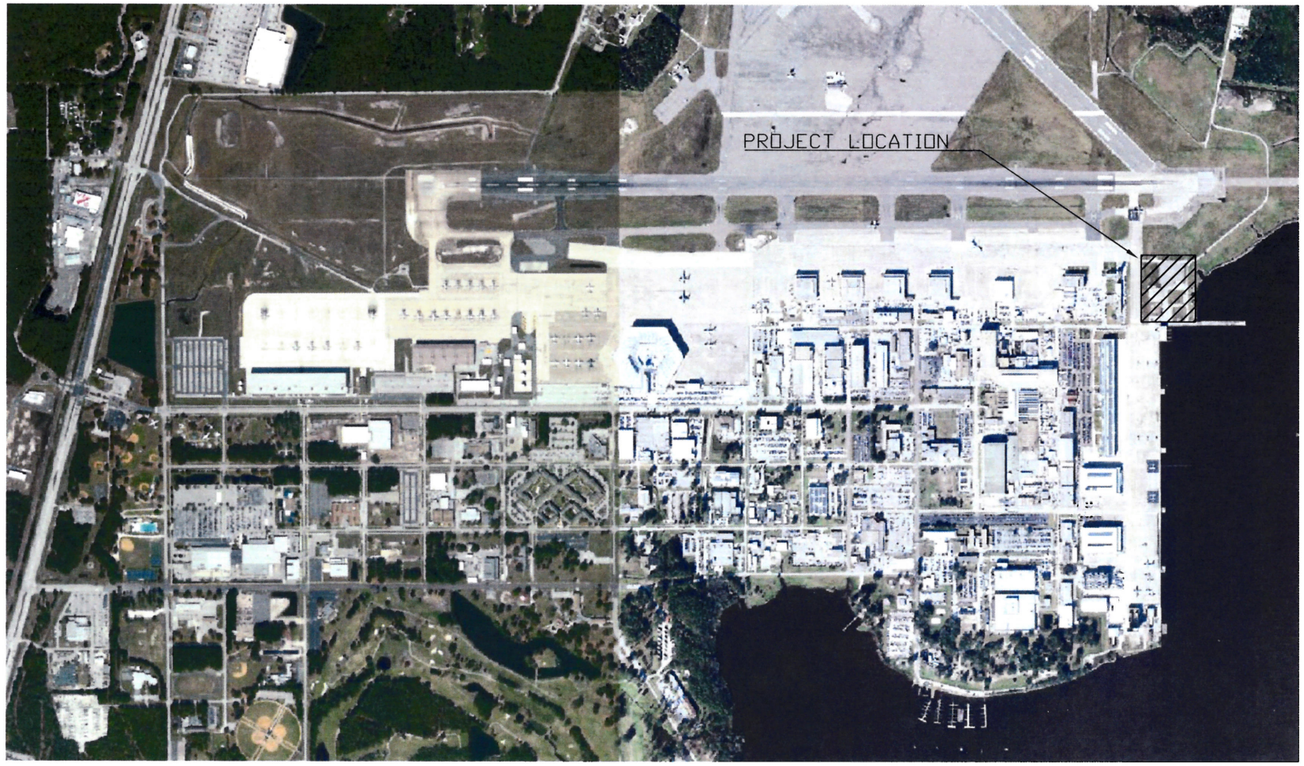

NAVFAC
Naval Facilities Engineering Command
NAVFAC SE

N69450-XX-C-XXXX
FINAL SUBMITTAL

17 DECEMBER 2014

COMMANDER NAVFAC/PLC FRED VARN, P.E.	IPT TECH. BRANCH HEAD – N/A NA	DESIGN ARCHITECT – N/A NA	DESIGN MECHANICAL – BRITTANY BRUBAKER, EIT
IPT PROJECT MANAGER – SHANA LOVE, P.E.		DESIGN STRUCTURAL – N/A NA	DESIGN ELECTRICAL – ROLANDO ORTIZ,
DESIGN CIVIL – JEFFREY W. FRANK, P.E.	CHIEF ARCHITECT– RAYMOND RODRIGUEZ, R.A. N/A	CHIEF MECHANICAL – STAN YERALIS, P.E.	CHIEF CIVIL – JEFFREY W. FRANK, P.E.
DESIGN FIRE PROTECTION – N/A NA	CHIEF STRUCTURAL – KURT W. WITTMAN, P.E. N/A	CHIEF ELECTRICAL – RAMON FLORES, P.E.	CHIEF FIRE PROTECTION–TAYLOR HUDSON, P.E. N/A

DRAWFORM REVISION: 7 AUGUST 2009

SYM	DESCRIPTION	DATE	APPR
---	---	---	---
---	---	---	---
---	---	---	---
---	---	---	---
---	---	---	---
---	---	---	---
---	---	---	---
---	---	---	---

NAVFAC

SEAL

A/E INFO

APPROVED

FOR COMMANDER NAVFAC / B.L.T.L.

ACTIVITY --

SATISFACTORY TO DATE --

DES JWF DRW JWF CHK JWH

PROJECT MANAGER LOVE

IPT TECH. BRANCH HEAD --

CHIEF ENG/ARCH (CORE) FRANK

DEPARTMENT OF THE NAVY
NAVAL FACILITIES ENGINEERING COMMAND
IPT SOUTH ATLANTIC
NAVAL FACILITIES ENGINEERING COMMAND SOUTHEAST
NAVAL AIR STATION JACKSONVILLE
NAVAL AIR STATION JACKSONVILLE, FLORIDA
MH-60 APRON AND REPAIRS
COVER & SIGNATURE SHEET

SCALE: NOT TO SCALE
EPROJECT NO: 1291637
CONSTR. CONTR. NO. N69450-XX-C-XXXX
NAVFAC DRAWING NO. 15091975
SHEET 1 OF 44
G001
PWD SHEET NUMBER --

FILE NAME: P:\CIBL\Project_Files\FLORIDA\NAS JACKSONVILLE FL\H\N00207\684-MH-60 APRON AND REPAIR-1291637\Working Technical Files\Drawings\Sheet\G001 COVER & SIGNATURE SHEET.dwg LAYOUT NAME: G001 COVER & SIGNATURE SHEET PLOTTED: Thursday, December 11, 2014 - 12:27pm USER: jeffrey.w.frank

Sheet List Table

SHEET NUMBER	SHEET TITLE	NAVFAC DWG NO.	PWD SHEET NUMBER
	00 – GENERAL		
G001	COVER & SIGNATURE SHEET	15091975	--
G002	DRAWING SHEET INDEX	15091976	--
	01 – CIVIL		
C001	GENERAL NOTES, LEGENDS AND ABBREVIATIONS	15091977	--
C002	PROJECT AERIAL	15091978	--
C100	DEMOLITION PLAN – NORTH	15091979	--
C101	DEMOLITION PLAN – SOUTH	15091980	--
C102	DEMOLITION LEGEND	15091981	--
C103	EXISTING SITE PHOTOS	15091982	--
C104	EXISTING SITE PHOTOS	15091983	--
C200	GEOMETRY PLAN – OVERALL	15091984	--
C201	GEOMETRY PLAN – HOT FUEL POSITION	15091985	--
C300	JOINT LAYOUT PLAN – NORTH	15091986	--
C301	JOINT LAYOUT PLAN – SOUTH	15091987	--
C400	PAVEMENT GRADING PLAN – NORTH	15091988	--
C401	PAVEMENT GRADING PLAN – SOUTH	15091989	--
C402	SITE GRADING PLAN – NORTH	15091990	--
C403	SITE GRADING PLAN – CENTRAL	15091991	--
C404	SITE GRADING PLAN – SOUTH	15091992	--
C405	SITE GRADING PLAN – EAST	15091993	--
C500	PAVEMENT MARKING PLAN	15091994	--
C600	WATER DISTRIBUTION PLAN – NORTH	15091995	--
C601	WATER DISTRIBUTION PLAN – SOUTH	15091996	--
C700	CATAPULT ROAD PROFILE	15091997	--
C701	CATAPULT ROAD CROSS SECTIONS	15091998	--
C702	FUEL TRUCK DRIVE PROFILE AND CROSS SECTIONS	15091999	--
C800	TYPICAL SECTIONS	15092000	--
C801	TYPICAL SECTIONS AND DETAILS	15092001	--
C802	PCC JOINT DETAILS	15092002	--
C803	DRAINAGE DETAILS	15092003	--
C804	DRAINAGE DETAILS	15092004	--
C805	SITE DETAILS	15092005	--
C806	WATERMAIN DETAILS	15092006	--
SW001	PRE–DEVELOPMENT DRAINAGE	15092007	--
SW002	POST–DEVELOPMENT DRAINAGE	15092008	--
	8 – MECHANICAL		
M001	GENERAL NOTES SYMBOLS AND LEGENDS	15092011	--
MS101	MECHANICAL SITE PLAN	15092012	--
MP101	PANTOGRAPH SYSTEM	15092013	--
MP501	DETAILS	15092014	--
	9 – ELECTRICAL		
E–001	ELECTRICAL NOTES	15092017	--
ED101	ELECTRICAL DEMO PLAN	15092018	--
EP101	APRON AREA POWER PLAN	15092019	--
EG101	ELECTRICAL STATIC GROUNDING PLAN	15092022	--
E501	ELECTRICAL LIGHTING DETAIL	15092024	--
E601	HELIPAD LIGHTING CONTROL DIAGRAM	15092026	--

SYM	DESCRIPTION	DATE	APPR
---	---	---	---
---	---	---	---
---	---	---	---
---	---	---	---
---	---	---	---
---	---	---	---
---	---	---	---
---	---	---	---

SEAL

A/E INFO

APPROVED

FOR COMMANDER NAVFAC / B.L.T.L.

ACTIVITY

--

SATISFACTORY TO DATE --

DES JWF DRW JWF CHK JWH

PROJECT MANAGER LOVE

IPT TECH. BRANCH HEAD --

CHIEF ENG/ARCH (CORE) FRANK

DEPARTMENT OF THE NAVY
NAVAL FACILITIES ENGINEERING COMMAND
IPT SOUTH ATLANTIC

NAVAL FACILITIES ENGINEERING COMMAND SOUTHEAST
NAVAL AIR STATION JACKSONVILLE

NAVAL AIR STATION JACKSONVILLE
JACKSONVILLE, FLORIDA

MH-60 APRON AND REPAIRS

DRAWING SHEET INDEX

SCALE: NOT TO SCALE

EPROJECT NO.: 1291637

CONSTR. CONTR. NO.
N69450–XX–C–XXXX

NAVFAC DRAWING NO.
15091976

SHEET 2 OF 44

G002

PWD SHEET NUMBER
--

DRAWFORM REVISION: 7 AUGUST 2009

SHEET FORMAT IS 22" X 34". IF PRINTED SHEET IS NOT 22" X 34", THEN IT IS NOT TO SCALE

FILE NAME: P:\CBL\Project_Files\FLORIDA\NAS JACKSONVILLE FL(H)\00207\664-MH-60 APRON AND REPAIR-1291637\Working Technical Files\Drawings\Sheet\G002 DRAWING SHEET INDEX.dwg LAYOUT NAME: G002 DRAWING SHEET INDEX PLOTTED: Monday, December 15, 2014 - 11:02am USER: jeffrey.w.frank

CIVIL/SITE GENERAL NOTES

1. THIS SITE IS A KNOWN PETROLEUM CONTAMINATED AREA. DISCHARGE OF DEWATERING ACTIVITIES INCIDENTAL TO CONSTRUCTION ACTIVITIES WILL NOT BE PERMITTED TO BE DISCHARGED DIRECTLY INTO THE ST. JOHNS RIVER. THE CONTRACTOR IS RESPONSIBLE FOR THE PROPER CONTAINERIZATION AND DISPOSAL OF ALL CONTAMINATED GROUND WATER OFF OF GOVERNMENT PROPERTY. ADDITIONALLY, CONTAMINATED SOILS SHALL BE REMOVED FROM GOVERNMENT PROPERTY AND DISPOSED OF PROPERLY. THE CURRENT SITE ASSESSMENT REPORT CAN BE FOUND IN THE REPORT 'PETROLEUM CONTAMINATED AREA 25 UST SITE 119 FUEL TRANSFER SUMP', DATED SEPTEMBER 2012 AS WRITTEN BY TETRATECH. A COPY OF THIS REPORT IS AVAILABLE FROM THE GOVERNMENT UPON REQUEST.
2. ELEVATION AND NORTHING AND EASTING DATA DECLARED FOR THE TEMPORARY BENCHMARK ON SHEET C100 WAS PROVIDED BY ALL AMERICAN SURVEYORS, INC. PRIOR TO THE START OF CONSTRUCTION, THE CONTRACTOR SHALL VERIFY THESE DATA AND NOTIFY THE CONTRACTING OFFICER IF DISCREPANCIES EXIST.
3. THE ITEMS SHOWN FOR DEMOLITION ON SHEETS C100 AND C101 ARE PER A TOPOGRAPHICAL SURVEY PERFORMED. ADDITIONAL ITEMS MAY BE REQUIRED TO BE REMOVED TO ACCOMMODATE THE PROPOSED WORK AND THAT WERE NOT LOCATED DURING THE SURVEY.
4. THE CONTRACTOR IS RESPONSIBLE FOR INVESTIGATING THE SITE PRIOR TO THE COMMENCEMENT OF CONSTRUCTION TO IDENTIFY ITEMS BEYOND THOSE SHOWN HEREIN WHICH REQUIRE PROTECTION. DAMAGE TO ITEMS CAUSED BY THE CONTRACTOR DURING CONSTRUCTION SHALL BE REPAIRED AT HIS EXPENSE AND IN A MANNER APPROVED BY THE CONTRACTING OFFICER.
5. THIS PROJECT WILL REQUIRE RE–GRADING AND FILL TO ACHIEVE THE PROPOSED ELEVATIONS. THE CONTRACTOR SHOULD ASSUME THAT FILL MATERIAL BEYOND THAT OBTAINED THROUGH SITE RE–GRADING WILL BE IMPORTED FROM OFF STATION AND THAT NO BORROW LOCATIONS EXIST ON STATION.
6. THE CONTRACTOR SHALL COORDINATE ALL WORK WITH THE CONTRACTING OFFICER IN ORDER TO MINIMIZE THE IMPACT OF THIS PROJECT ON STATION OPERATIONS.
7. FOR STABILIZATION PURPOSES ALL AREAS DISTURBED DURING CONSTRUCTION SHALL BE SODDED.
8. THE CONTRACTOR IS REQUIRED TO SUBMIT A NOTICE OF INTENT (NOI) TO THE FLORIDA DEPARTMENT OF ENVIRONMENTAL PROTECTION PRIOR TO COMMENCEMENT OF CONSTRUCTION. A STORMWATER PERMIT HAS BEEN OBTAINED BY THE GOVERNMENT FOR THIS PROJECT THROUGH THE ST. JOHNS RIVER WATER MANAGEMENT DISTRICT AND WILL BE PROVIDED TO THE CONTRACTOR PRIOR TO CONSTRUCTION.
9. SEDIMENT AND EROSION CONTROL MEASURES AS SHOWN ON SHEET SW001 ARE THE MINIMUM REQUIRED. THE CONTRACTOR SHALL ENSURE THAT ANY POTENTIAL FOR SEDIMENT RUNOFF FROM THE SITE IS MINIMIZED AND THAT ALL CONTROL MEASURES ARE INSTALLED AND MAINTAINED PER BEST MANAGEMENT PRACTICES FOR THE DURATION OF THE PROJECT.
10. ANY CHANGES TO THE JOINT PLANS SHOWN ON SHEETS C300 AND C301 SHALL NOT BE ACCOMPLISHED WITHOUT THE WRITTEN APPROVAL OF THE DESIGNER OF RECORD. NO OTHER PERSONS ARE PERMITTED TO APPROVE SUCH DEVIATIONS.
11. THE SITE GRADING LIMITS SHOWN ON SHEETS C402 TO C405 ARE APPROXIMATE AND BASED ON LIMITED SURVEY DATA. IN AREAS WHERE THE CONTRACTOR IS UNABLE TO MATCH GRADE AT THIS LIMIT, THE CLEARING LIMITS SHALL BE EXTENDED SUCH THAT THE EXISTING GRADE IS MATCHED AT A SLOPE NOT STEEPER THAN 10:1 H:V.
12. THE AIRFIELD WILL REMAIN ACTIVE DURING THIS CONSTRUCTION. THE CONTRACTOR SHALL LIMIT HIS VEHICULAR TRAFFIC TO THE ROUTE DELINEATED ON SHEET C002. THIS PATH SHALL REMAIN CLEAN AND FREE FROM FOD FOR THE DURATION OF THE PROJECT. THE CONTRACTOR SHALL MAINTAIN AN AGGRESSIVE SWEEPING AND VACUUMING REGIMEN TO ENSURE THAT TAXIWAY BRAVO AND ALL ADJACENT PAVEMENT AREAS REMAIN CLEAN AND FREE OF DEBRIS. THE CONTRACTING OFFICER RESERVES THE RIGHT TO DEMAND THAT THE CONTRACTOR INCREASE SWEEPING AND/OR VACUUMING FREQUENCY AT THE CONTRACTOR'S COST.
13. GEOTECHNICAL DATA WERE OBTAINED FROM THE REPORT 'SUBSURFACE INFORMATION FOR THE P664 HELO PARKING AND LANDING APRON', DATED FEBRUARY 2014 AS WRITTEN BY BURNS & McDONNELL. THE RELATIVE LOCATIONS FOR THESE TESTS ARE SHOWN ON SHEET C003. A COPY OF THIS REPORT IS AVAILABLE FROM THE GOVERNMENT UPON REQUEST.
14. THIS SITE CONTAINS A NUMBER OF GROUNDWATER MONITORING WELLS AS SHOWN ON SHEETS C100 AND C101. THE CONTRACTOR IS RESPONSIBLE FOR PROPERLY ABANDONING THOSE INDICATED AND REPLACING THOSE DESIGNATED IAW DETAIL A5/C805. PRIOR TO ALTERING THE MONITORING WELLS, THE CONTRACTOR IS REQUIRED TO MEET WITH THE NAS JACKSONVILLE ENVIRONMENTAL REPRESENTATIVE TO IDENTIFY THE WELLS WHICH WILL BE ABANDONED, ADJUSTED, OR RE–ESTABLISHED. A TABLE OF MONITORING WELL RELOCATION IS SHOWN ON SHEET C805.
15. THROUGHOUT THE DURATION OF CONSTRUCTION CATAPULT ROAD MUST REMAIN ACCESSIBLE BY GOVERNMENT PERSONNEL UTILIZING THAT ROUTE. THE CONTRACTOR SHALL PHASE HIS WORK SUCH THAT A MINIMUM 10–FOOT WIDE TRAFFICABLE PATH IS MAINTAINED.
16. THE EXISTING PIER SHOULD NOT BE TRAFFICKED UPON. CURRENTLY, THE PIER IS DEEMED STRUCTURALLY INADEQUATE TO SUPPORT SUCH TRAFFIC. THE CONTRACTOR SHOULD INCORPORATE APPROPRIATE MEASURES (E.G., BARRICADES, SIGNAGE) TO ENSURE CONSTRUCTION EQUIPMENT IS PREVENTED FROM INADVERTENTLY ENTERING THE PIER.

LEGEND

EXISTING		NEW
	CONCRETE PAVEMENT	
	ASPHALT PAVEMENT	
—(9.50)—	CONTOUR	—9.50—
	INLET SEDIMENT PROTECTION	
	TEMP. SEDIMENT FENCE	
E	ELECTRICAL PULL BOX	
E	ELECTRICAL MANHOLE	
S	SANITARY MANHOLE	
D	STORMWATER DRAINAGE MANHOLE	
	TEMPORARY BENCHMARK (SEE NOTE 2)	
	STORMWATER INLET STRUCTURE	
	STORMWATER END SECTION	
	HORIZONTAL GEOMETRY POINT	
14 M	MONITORING WELL (SEE NOTE 14)	
V S	STORMWATER VALVE	
V W	WATER VALVE	
—WM—	WATER MAIN	—8"WM—
—ST—	STORMWATER PIPE	

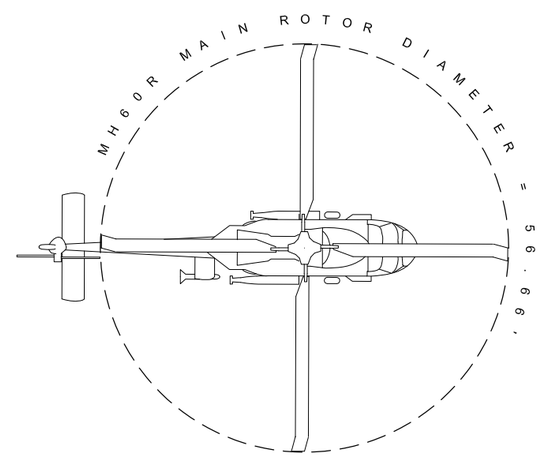

LIST OF ABBREVIATIONS

Ac.	ACRES
AC	ADVISORY CIRCULAR
ACC	ASPHALT CEMENT CONCRETE
BLS	BELOW LAND SURFACE
CLR.	CLEAR
D	DEEP
DIA.	DIAMETER
(E)	EASTING OR EXISTING
FAA	FEDERAL AVIATION ADMINISTRATION
FDOT	FLORIDA DEPARTMENT OF TRANSPORTATION
FH	FIRE HYDRANT
Ga.	GAGE
GV	GATE VALVE
HDPE	HIGH–DENSITY POLYETHYLENE
H:V	HORIZONTAL TO VERTICAL
IAW	IN ACCORDANCE WITH
L	LONG
LT	LEFT
MAX.	MAXIMUM
MIN.	MINIMUM
(N)	NORTHING
O.C.	ON CENTER
O.D.	OUTSIDE DIAMETER
(P)	PROPOSED
PC	POINT OF CURVATURE
PCC	PORTLAND CEMENT CONCRETE
PT	POINT OF TANGENCY
R.	RADIUS
RCP	REINFORCED CONCRETE PIPE
RT	RIGHT
SCH.	SCHEDULE
STA.	STATION
STL.	STEEL
SY	SQUARE YARDS
THK.	THICK
TW	TAXIWAY
W	WIDE
W/	WITH
WWR	WELDED WIRE REINFORCEMENT
ø	DIAMETER
§	SPECIFICATION SECTION

CRITERIA WAIVERS WILL BE REQUIRED FOR THIS PROJECT AND ARE REQUIRED TO BE OBTAINED BY THE GOVERNMENT PRIOR TO COMMENCEMENT OF CONSTRUCTION.

WAIVER 1 – CONVERSION OF EXISTING TAXIWAY BRAVO TO A TAXILANE IS REQUIRED IN ORDER TO MAINTAIN THE REQUIRED CLEARANCE BETWEEN THE TAXILANE AND THE NEW APRON (REFERENCE: UFC 2–000–05N, SECTION 11320–9). EXISTING TAXIWAY BRAVO WILL SERVE AS A PERIPHERAL TAXILANE FOR THE PARKING APRON.

WAIVER 2 – THE REQUIRED 101.0' PERIPHERAL TAXILANES ON ALL SIDE OF THE APRON IS NOT POSSIBLE DUE TO EXPANSION LIMITATIONS ON THE APRON'S EAST SIDE. THE WAIVER WILL PERMIT FOR TAXILANES ON ONLY TO THE NORTH AND SOUTH OF THE MAIN HELICOPTER PARKING SPACES WITH A 46.0' LANE ON THE EAST SIDE. THE EAST SIDE OF THE APRON WILL NOT BE OF ADEQUATE WIDTH FOR THE TAXIING OF HELICOPTERS.

PAVEMENT SECTION SHOWN WAS CALCULATED WITH THE MH60R HELICOPTER AS THE CONTROLLING, MISSION AIRCRAFT.

AIRCRAFT DATA:

MISSION GROSS WEIGHT = 21,290 LBS
MAXIMUM TAKEOFF GROSS WEIGHT = 23,500 LBS

LENGTH = 64.83 FT
WIDTH = 53.66 FT
HEIGHT = 16.70 FT
MAIN ROTOR DIAMETER = 53.66 FT

OPERATIONAL DATA:

73,000 PASSES AT 23,500 LBS (20–YEARS)

IF SHEET IS LESS THAN (22" x 34") IT IS A REDUCED PRINT, SCALE REDUCED ACCORDINGLY

SYM	DESCRIPTION	DATE	APPR
---	---	---	---

NAVFAC

SEAL

A/E INFO

APPROVED

FOR COMMANDER NAVFAC / B.L.T.L.

ACTIVITY

--

SATISFACTORY TO DATE --

DES JWF DRW JWF CHK JWH

PROJECT MANAGER LOVE

IPT TECH. BRANCH HEAD --

CHIEF ENG/ARCH (CORE) FRANK

DEPARTMENT OF THE NAVY
NAVAL FACILITIES ENGINEERING COMMAND SOUTHEAST
IPT SOUTH ATLANTIC
NAVAL FACILITIES ENGINEERING COMMAND
NAVAL AIR STATION JACKSONVILLE
NAVAL AIR STATION JACKSONVILLE, FLORIDA
MH-60 APRON AND REPAIRS
GENERAL NOTES, LEGENDS AND ABBREVIATIONS

SCALE: NOT TO SCALE
EPROJECT NO.: 1291637
CONSTR. CONTR. NO. N69450–XX–C–XXXX
NAVFAC DRAWING NO. 15091977
SHEET 3 OF 44
C001

DRAWFORM REVISION: 7 AUGUST 2009

FILE NAME: P:\CIR\Project_Files\FLORIDA\NAS JACKSONVILLE FL)H)N00207\664-MH-60 APRON AND REPAR~1291637\Working Technical Files\Drawings\Sheet001 GENERAL NOTES, LEGENDS AND ABBREVIATIONS.dwg LAYOUT NAME: C001 GENERAL NOTES LEGENDS AND ABBREVIATIONS PLOTTED: Monday, December 15, 2014 - 11:03am USER: jeffrey.w.frank

SYM	DESCRIPTION	DATE	APPR
---	---	---	---
---	---	---	---
---	---	---	---
---	---	---	---
---	---	---	---
---	---	---	---
---	---	---	---
---	---	---	---

NAVFAC

SEAL

A/E INFO

APPROVED

FOR COMMANDER NAVFAC / B.L.T.L.

ACTIVITY

--

SATISFACTORY TO DATE --

DES JWF DRW JWF CHK JWH

PROJECT MANAGER LOVE

IPT TECH. BRANCH HEAD --

CHIEF ENG/ARCH (CORE) FRANK

DEPARTMENT OF THE NAVY
NAVAL FACILITIES ENGINEERING COMMAND
IPT SOUTH ATLANTIC

NAVAL FACILITIES ENGINEERING COMMAND SOUTHEAST
NAVAL AIR STATION JACKSONVILLE

NAVAL AIR STATION JACKSONVILLE JACKSONVILLE, FLORIDA

MH-60 APRON AND REPAIRS

PROJECT AERIAL

SCALE: 1"=60'

EPROJECT NO.: 1291637

CONSTR. CONTR. NO. N69450-XX-C-XXXX

NAVFAC DRAWING NO. 15091978

SHEET 4 OF 44

C002

DRAWFORM REVISION: 7 AUGUST 2009

SHEET FORMAT IS 22" X 34" - IF PRINTED SHEET IS NOT 22" X 34" THEN IT IS NOT TO SCALE

FILE NAME: P:\CBL\Project_Files\FLORIDA\NAS JACKSONVILLE FL\H\N00207\664-MH-60 APRON AND REPAIR-1291637\Working Technical Files\Drawings\Sheet\C002 PROJECT AERIAL.dwg LAYOUT NAME: C002 PROJECT AERIAL PLOTTED: Monday, December 15, 2014 - 11:04am USER: jeffrey.w.frank

FILE NAME: P:\CIBL\Project_Files\FLORIDA\NAS JACKSONVILLE FL(H)\60207\664-MH-60 APRON AND REPAIR-1291637\Working Technical Files\Drawings\Sheet C100 DEMOLITION PLAN - NORTH.dwg LAYOUT NAME: C100 DEMOLITION PLAN - NORTH PLOTTED: Wednesday, December 17, 2014 - 12:06pm USER: jeffrey.w.frank

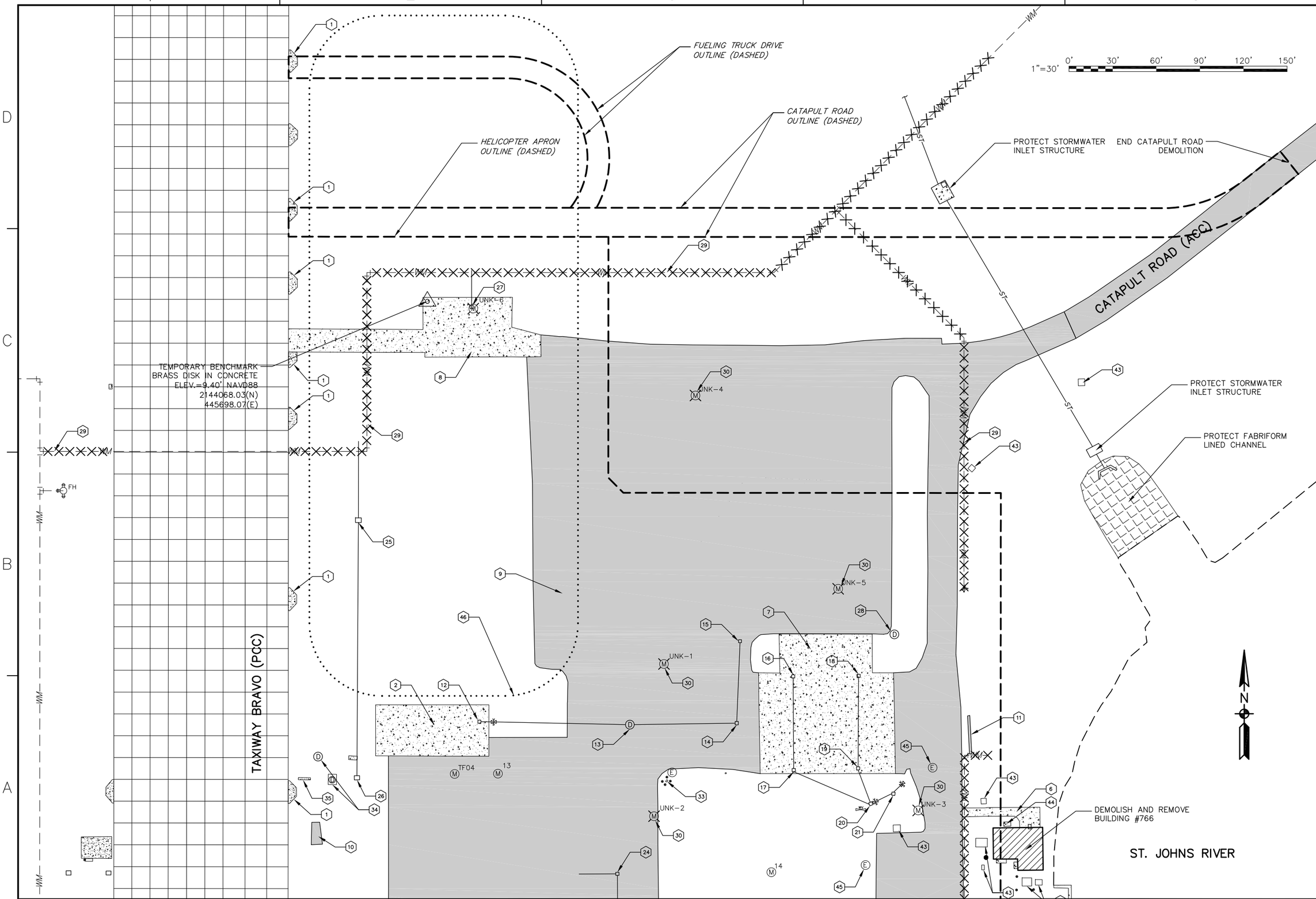

APPR	DATE	DESCRIPTION	STM

A/E INFO

APPROVED

FOR COMMANDER NAVFAC / B.L.T.L.

ACTIVITY

--

SATISFACTORY TO DATE --

DES JWF | DRW JWF | CHK JWH

PROJECT MANAGER LOVE

IPT TECH. BRANCH HEAD --

CHIEF ENG/ARCH (CORE) FRANK

DEPARTMENT OF THE NAVY
NAVAL FACILITIES ENGINEERING COMMAND
IPT SOUTH ATLANTIC

NAVAL FACILITIES ENGINEERING COMMAND SOUTHEAST
NAVAL AIR STATION JACKSONVILLE

NAVAL AIR STATION JACKSONVILLE
JACKSONVILLE, FLORIDA

MH-60 APRON AND REPAIRS

DEMOLITION PLAN - NORTH

SCALE: 1"=30'

EPROJECT NO.: 1291637

CONSTR. CONTR. NO. N69450-XX-C-XXXX

NAVFAC DRAWING NO. 15091979

SHEET 5 OF 44

C100

DRAWFORM REVISION: 7 AUGUST 2009

TAXIWAY BRAVO (PCC)

PROTECT EXISTING TAXIWAY BRAVO PCC EDGE

SAWCUT ACC PAVEMENT FULL DEPTH ALONG LINE. DEMOLISH AND REMOVE PAVEMENT TO THE NORTH AND PROTECT PAVEMENT TO REMAIN TO THE SOUTH

DEMOLISH AND REMOVE BUILDING #766

DEMOLISH AND REMOVE BUILDING #1755

ST. JOHNS RIVER

PROTECT PCC SEAWALL

HELICOPTER APRON OUTLINE (DASHED)

ALBEMARLE AVENUE (ACC)

PIER (TO REMAIN)

BOAT HOUSE

UNK-1 UNK-2 UNK-3 UNK-5 TF04 TF03 TF11

GRAPHIC SCALE 1"=30' 0' 30' 60' 90' 120' 150'

									APPR
									DATE
									DESCRIPTION
									SYM

NAVFAC

SEAL

A/E INFO

APPROVED

FOR COMMANDER NAVFAC / B.L.T.L.

ACTIVITY --

SATISFACTORY TO DATE --

DES JWF DRW JWF CHK JWH

PROJECT MANAGER LOVE

IPT TECH. BRANCH HEAD --

CHIEF ENG/ARCH (CORE) FRANK

DEPARTMENT OF THE NAVY
NAVAL FACILITIES ENGINEERING COMMAND SOUTHEAST
IPT SOUTH ATLANTIC
NAVAL FACILITIES ENGINEERING COMMAND
NAVAL AIR STATION JACKSONVILLE
NAVAL AIR STATION JACKSONVILLE, FLORIDA

MH-60 APRON AND REPAIRS

DEMOLITION PLAN – SOUTH

SCALE: 1"=30'

EPROJECT NO.: 1291637

CONSTR. CONTR. NO. N69450-XX-C-XXXX

NAVFAC DRAWING NO. 15091980

SHEET 6 OF 44

C101

DRAWFORM REVISION: 7 AUGUST 2009

SHEET FORMAT IS 22" X 34". IF PRINTED SHEET IS NOT 22" X 34", THEN IT IS NOT TO SCALE

FILE NAME: P:\CBL\Project_Files\FLORIDA\NAS JACKSONVILLE FL(H)\N00207\&84-MH-60 APRON AND REPAIR-1291637\Working Technical Files\Drawings\Sheet101 DEMOLITION PLAN - SOUTH.dwg LAYOUT NAME: C101 DEMOLITION PLAN - SOUTH PLOTTED: Wednesday, December 17, 2014 - 12:01pm USER: jeffrey.w.frank

DEMOLITION ITEMS LIST

1 DEMOLISH PCC LIGHT PAD AND APPURTENANCES

2 DEMOLISH PCC PAVEMENT APPROXIMATELY 310 SY

3 DEMOLISH PCC PAVEMENT APPROXIMATELY 220 SY

4 DEMOLISH PCC PAVEMENT APPROXIMATELY 140 SY AND STORMWATER INLET AND CULVERTS

5 DEMOLISH PCC PAVEMENT APPROXIMATELY 190 SY

6 DEMOLISH PCC PAVEMENT APPROXIMATELY 50 SY

7 DEMOLISH PCC PAVEMENT APPROXIMATELY 910 SY

8 DEMOLISH PCC PAVEMENT APPROXIMATELY 485 SY

9 DEMOLISH ACC PAVEMENT APPROXIMATELY 15850 SY

10 DEMOLISH PCC PAVEMENT APPROXIMATELY 11 SY

11 DEMOLISH PCC PAVEMENT APPROXIMATELY 5 SY

12 DEMOLISH STORMWATER INLET AND PIPE, TOP=8.5'±, 8" CIP INV.=4.98'

13 DEMOLISH STORMWATER INLET AND PIPE, TOP=8.2'±, 8" CIP INV.=4.13'(E), 8" CIP INV.=4.32'(W), 8" CIP INV.=4.12'(N)

14 DEMOLISH STORMWATER INLET AND PIPE, TOP=7.1'±, 18" RCP INV.=2.13'(E), 8" CIP INV.=3.07'(W)

15 DEMOLISH STORMWATER INLET AND PIPE, TOP=6.1'±, 18" RCP INV.=3.44'(S)

16 DEMOLISH STORMWATER INLET AND PIPE, TOP=7.0'±, 8" CIP INV.=5.34'(S)

17 DEMOLISH STORMWATER INLET AND PIPE, TOP=7.0'±, 8" CIP INV.=4.51'(N), 8" CIP INV.=4.63'(S)

18 DEMOLISH STORMWATER INLET AND PIPE, TOP=7.0'±, 8" CIP INV.=4.60'(S)

19 DEMOLISH STORMWATER INLET AND PIPE, TOP=7.0'±, 8" CIP INV.=3.60'(N), 8" CIP INV.=3.41'(S)

20 DEMOLISH STORMWATER INLET AND PIPE, TOP=6.5'±, 8" CIP INV.=2.03'(W), 8" CIP INV.=2.03'(E), 8" CIP INV.=3.02'(N)

21 DEMOLISH STORMWATER INLET AND PIPE

22 DEMOLISH STORMWATER INLET AND PIPE

23 DEMOLISH STORMWATER INLET AND PIPE

24 DEMOLISH STORMWATER INLET AND PIPE

25 DEMOLISH STORMWATER INLET AND PIPE

26 DEMOLISH STORMWATER INLET AND PIPE

27 DEMOLISH STORMWATER INLET AND PIPE

28 DEMOLISH STORMWATER INLET AND PIPE

29 DEMOLISH POTABLE WATER MAIN AND APPURTENANCES

30 PROPERLY ABANDON MONITORING WELL PER FLORIDA DEPARTMENT OF ENVIRONMENTAL PROTECTION REQUIREMENTS AND METHODS. SEE SHEET C805 FOR TABLE OF MONITORING WELLS INCLUDED IN THIS PROJECT.

31 DEMOLISH PCC SLABS APPROXIMATELY 50 SY

32 DEMOLISH RAILROAD TRACKS, TIES, AND BALLAST (SEE PHOTO 6, SHEET C103). THE CONTRACTOR SHALL STORE THE RAILROAD TRACKS ONSITE FOR COLLECTION BY THE GOVERNMENT.

33 DEMOLISH ELECTRICAL MANHOLE, CABINET, AND BOLLARDS (SEE PHOTO 5, SHEET C103)

34 DEMOLISH STORMWATER MANHOLES AND CONNECTING PIPED CULVERTS

35 DEMOLISH PCC PAVEMENT APPROXIMATELY 2 SY

36 DEMOLISH ABOVEGROUND FUEL STORAGE TANK, PCC MOUNTING PAD, AND BOLLARDS (SEE PHOTO 3, SHEET C103)

37 DEMOLISH STORMWATER INLET AND CONNECTING PIPED CULVERTS

38 DEMOLISH TELEPHONE MANHOLE AND APPURTENANCES

39 DEMOLISH PCC PAVEMENT APPROXIMATELY 6 SY AND BOLLARDS

40 DEMOLISH ABANDONED OIL/WATER SEPERATOR AND APPURTENANCES

41 DEMOLISH PCC PAVEMENT APPROXIMATELY 2 SY

42 DEMOLISH PCC ELECTRICAL PAD, BOLLARDS, AND APPURTENANCES

43 DEMOLISH ELECTRICAL PAD AND APPURTENANCES

44 DEMOLISH PCC PAVEMENT APPROXIMATELY 3 SY

45 DEMOLISH ELECTRICAL MANHOLE AND APPURTENANCES

46 DEMOLISH SEVEN (7) UNDERGROUND FUEL STORAGE TANKS WITHIN THE DELINEATED AREA. TANKS HAVE BEEN CLEANED OF ALL FUEL RESIDUE UNDER A PREVIOUS CONTRACT AND WERE FILLED WITH LIGHT-WEIGHT FILL AND LEFT IN PLACE. FOR BIDDING PURPOSES THE CONTRACTOR SHALL ASSUME EACH TANK IS STEEL, SINGLE-WALLED, HAS APPROXIMATELY 3-FEET OF COVER, A CAPACITY OF 27000 GALLONS, AND IS ENCAPSULATED (SUBSURFACE) IN PEA GRAVEL. DEMOLITION SHALL INCLUDE CONNECTED, ABANDONED PIPES AND FIXTURES.

47 DEMOLISH A 500 GALLON SUBSURFACE FUEL STORAGE TANK. TANK HAS BEEN CLEANED OF ALL FUEL RESIDUE UNDER A PREVIOUS CONTRACT AND WAS FILLED WITH LIGHT-WEIGHT FILL AND LEFT IN PLACE. DEMOLITION SHALL INCLUDE CONNECTED, ABANDONED PIPES AND FIXTURES.

48 DEMOLISH ABANDONED FUEL BUNKER PITS, VALVES, AND APPURTENANCES

NOTES:

1) THE DEMOLITION ITEMS, DESCRIPTIONS, AND QUANTITIES INCLUDED ON THIS SHEET1) IS NOT PURPORTED TO BE INCLUSIVE OF ALL ITEMS REQUIRED TO BE DEMOLISHED TO FACILITATE THE PROPOSED CONSTRUCTION. THE ITEMS INCLUDED ARE BASED UPON SITE INVESTIGATION, SURVEY, AND AS-BUILT DATA AVAILABLE. IT IS INTENDED TO ASSIST THE CONTRACTOR WITH UNDERSTANDING THE SCOPE OF DEMOLITION. HOWEVER, ITEMS MAY EXIST THAT ARE REQUIRED TO BE REMOVED AND ARE NOT SHOWN HEREIN. THE CONTRACTOR IS HIGHLY ENCOURAGED TO RECONNOITER THE PROJECT AREA PRIOR TO SUBMISSION OF BID IN ORDER TO VALIDATE THE SCOPE OF DEMOLITION.

2) IN LOCATIONS WHERE THE REMOVAL OF ABANDONED SUBSURFACE PIPES IS NOT POSSIBLE (E.G., CONTINUANCE OF PIPING OUTSIDE OF THE PROJECT AREA) THE CONTRACTOR SHALL GROUT FILL THE LINE AND CAP THE EXPOSED PIPE END.

SYM	DESCRIPTION	DATE	APPR
---	---	---	---

SEAL

A/E INFO

APPROVED

FOR COMMANDER NAVFAC / B.L.T.L.

ACTIVITY

--

SATISFACTORY TO DATE --

DES JWF | DRW JWF | CHK JWH

PROJECT MANAGER LOVE

IPT TECH. BRANCH HEAD --

CHIEF ENG/ARCH (CORE) FRANK

DEPARTMENT OF THE NAVY
NAVAL FACILITIES ENGINEERING COMMAND
IPT SOUTH ATLANTIC

NAVAL FACILITIES ENGINEERING COMMAND SOUTHEAST
NAVAL AIR STATION JACKSONVILLE

NAVAL AIR STATION JACKSONVILLE
JACKSONVILLE, FLORIDA

MH-60 APRON AND REPAIRS

DEMOLITION LEGEND

SCALE: NOT TO SCALE

EPROJECT NO.: 1291637

CONSTR. CONTR. NO. N69450-XX-C-XXXX

NAVFAC DRAWING NO. 15091981

SHEET 7 OF 44

C102

DRAWFORM REVISION: 7 AUGUST 2009

SHEET FORMAT IS 22" X 34". IF PRINTED SHEET IS NOT 22" X 34", THEN IT IS NOT TO SCALE

FILE NAME: P:\CBL\Project_Files\FLORIDA\NAS JACKSONVILLE FL\H\N00207\664-MH-60 APRON AND REPAIR-1291637\Working Technical Files\Drawings\Sheet C102 DEMOLITION LEGEND.dwg LAYOUT NAME: C102 DEMOLITION LEGEND PLOTTED: Wednesday, December 17, 2014 - 11:54am USER: jeffreyw.frank

PHOTO 1 - BUILDING 1755 WEST ELEVATION

PHOTO 2 - BUILDING 1755 SOUTH AND EAST ELEVATIONS

PHOTO 3 - BUILDING 1755 WEST ELEVATION, ABOVEGROUND TANK, AND BUILDING 766 IN THE BACKGROUND

PHOTO 4 - LOOKING WEST TOWARDS THE AIR OPERATIONS BUILDING

PHOTO 5 - ELECTRICAL MANHOLE, CABINET, AND BOLLARDS WITH BUILDINGS 766 AND 1755 IN THE BACKGROUND

PHOTO 6 - VIEW OF ALBEMARLE AVENUE LOOKING WEST

PHOTO 7 - BUILDING 766 WEST ELEVATION

PHOTO 8 - CATAPULT ROAD LOOKING WEST TOWARDS THE QUARTERDECK APRON AND THE AIR TRAFFIC CONTROL TOWER

PHOTO 9 - PROJECT TEMPORARY BENCHMARK BRASS DISK IN CONCRETE (SEE SHEET C100 FOR PLAN VIEW)

PHOTO 10 - SEAWALL LOOKING NORTHEAST

PHOTO 11 - SEAWALL LOOKING NORTH

PHOTO 12 - SEAWALL LOOKING SOUTH

SYM	DESCRIPTION	DATE	APPR
---	---	---	---

NAVFAC

SEAL

A/E INFO

APPROVED

FOR COMMANDER NAVFAC / B.L.T.L.

ACTIVITY

--

SATISFACTORY TO DATE --

DES JWF DRW JWF CHK JWH

PROJECT MANAGER LOVE

IPT TECH. BRANCH HEAD --

CHIEF ENG/ARCH (CORE) FRANK

DEPARTMENT OF THE NAVY
NAVAL FACILITIES ENGINEERING COMMAND
IPT SOUTH ATLANTIC

NAVAL FACILITIES ENGINEERING COMMAND SOUTHEAST
NAVAL AIR STATION JACKSONVILLE

NAVAL AIR STATION JACKSONVILLE JACKSONVILLE, FLORIDA

MH-60 APRON AND REPAIRS

EXISTING SITE PHOTOS

SCALE: NOT TO SCALE

EPROJECT NO.: 1291637

CONSTR. CONTR. NO. N69450-XX-C-XXXX

NAVFAC DRAWING NO. 15091982

SHEET 8 OF 44

C103

DRAWFORM REVISION: 7 AUGUST 2009

SHEET FORMAT IS 22" X 34". IF PRINTED SHEET IS NOT 22" X 34", THEN IT IS NOT TO SCALE

FILE NAME: P:\CBL\Project_Files\FLORIDA\NAS JACKSONVILLE FL)H)N00207\664-MH-60 APRON AND REPAIR-1291637\Working Technical Files\Drawings\Sheet C103 EXISTING SITE PHOTOS.dwg LAYOUT NAME: C103 EXISTING SITE PHOTOS PLOTTED: Monday, December 15, 2014 - 11:11am USER: jeffrey.w.frank

PHOTO 13 - STANDING AT CENTER OF SITE LOOKING NORTH

PHOTO 16 - STANDING AT CENTER OF SITE LOOKING SOUTHEAST

PHOTO 19 - STANDING AT CENTER OF SITE LOOKING WEST

PHOTO 22 - MONITORING WELL IN PAVED AREA

PHOTO 14 - STANDING AT CENTER OF SITE LOOKING NORTHEAST

PHOTO 17 - STANDING AT CENTER OF SITE LOOKING SOUTH

PHOTO 20 - STANDING AT CENTER OF SITE LOOKING NORTHWEST

PHOTO 15 - STANDING AT CENTER OF SITE LOOKING EAST

PHOTO 18 - STANDING AT CENTER OF SITE LOOKING SOUTHWEST

PHOTO 21 - MONITORING WELL IN GRASSED AREA

SYM	DESCRIPTION	DATE	APPR
---	---	---	---
---	---	---	---
---	---	---	---
---	---	---	---
---	---	---	---
---	---	---	---
---	---	---	---
---	---	---	---

NAVFAC

SEAL

A/E INFO

APPROVED

FOR COMMANDER NAVFAC / B.L.T.L.

ACTIVITY

--

SATISFACTORY TO DATE --

DES JWF | DRW JWF | CHK JWH

PROJECT MANAGER LOVE

IPT TECH. BRANCH HEAD --

CHIEF ENG/ARCH (CORE) FRANK

DEPARTMENT OF THE NAVY
NAVAL FACILITIES ENGINEERING COMMAND
IPT SOUTH ATLANTIC

NAVAL FACILITIES ENGINEERING COMMAND SOUTHEAST
NAVAL AIR STATION JACKSONVILLE

NAVAL AIR STATION JACKSONVILLE
JACKSONVILLE, FLORIDA

MH-60 APRON AND REPAIRS

EXISTING SITE PHOTOS

SCALE: NOT TO SCALE

EPROJECT NO.: 1291637

CONSTR. CONTR. NO.
N69450-XX-C-XXXX

NAVFAC DRAWING NO.
15091983

SHEET 9 OF 44

C104

DRAWFORM REVISION: 7 AUGUST 2009

FILE NAME: P:\CBL\Project_Files\FLORIDA\NAS JACKSONVILLE FL(H)\N00207\684-MH-60 APRON AND REPAIR-1291637\Working Technical Files\Drawings\Sheet C104 EXISTING SITE PHOTOS.dwg LAYOUT NAME: C104 EXISTING SITE PHOTOS PLOTTED: Monday, December 15, 2014 - 11:12am USER: jeffrey.w.frank

SHEET FORMAT IS 22" X 34". IF PRINTED SHEET IS NOT 22" X 34" THEN IT IS NOT TO SCALE

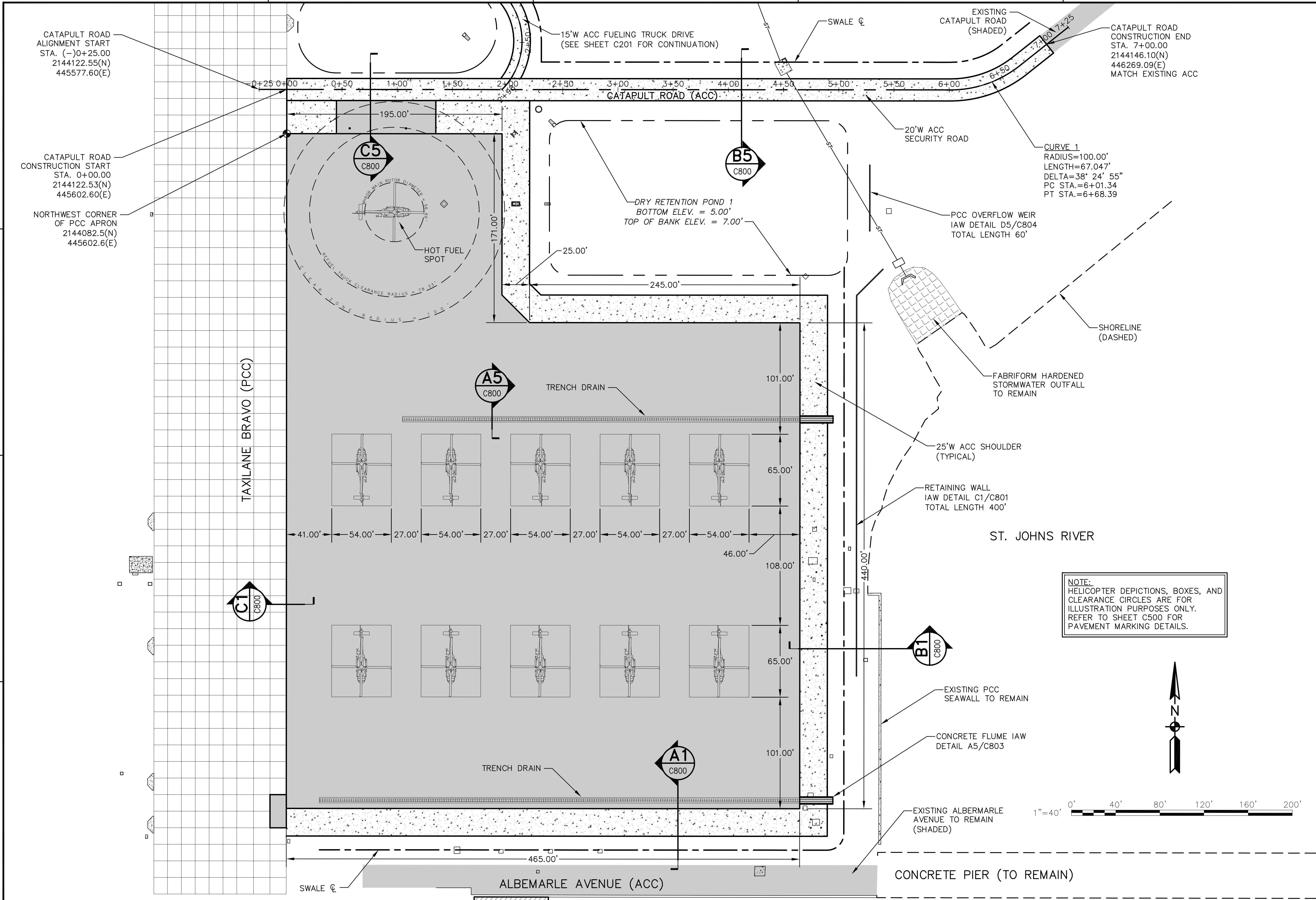

NOTE:
HELICOPTER DEPICTIONS, BOXES, AND CLEARANCE CIRCLES ARE FOR ILLUSTRATION PURPOSES ONLY. REFER TO SHEET C500 FOR PAVEMENT MARKING DETAILS.

NAVFAC

APPROVED

FOR COMMANDER NAVFAC / B.L.T.L.

ACTIVITY --

SATISFACTORY TO DATE --

DES JWF	DRW JWF	CHK JWH
PROJECT MANAGER	LOVE	
IPT TECH. BRANCH HEAD	--	
CHIEF ENG/ARCH (CORE)	FRANK	

DEPARTMENT OF THE NAVY
NAVAL FACILITIES ENGINEERING COMMAND
NAVAL FACILITIES ENGINEERING COMMAND SOUTHEAST
IPT SOUTH ATLANTIC
NAVAL AIR STATION JACKSONVILLE
NAVAL AIR STATION JACKSONVILLE
JACKSONVILLE, FLORIDA

MH-60 APRON AND REPAIRS

GEOMETRY PLAN – OVERALL

SCALE: 1"=40'
EPROJECT NO.: 1291637
CONSTR. CONTR. NO. N69450–XX–C–XXXX
NAVFAC DRAWING NO. 15091984
SHEET 10 OF 44

C200

DRAWFORM REVISION: 7 AUGUST 2009

FUELING TRUCK DRIVE ALIGNMENT
START STA. (–)0+25.00
2144229.04(N)
445577.68(E)

FUELING TRUCK DRIVE CONSTRUCTION
START STA. 0+00.00
2144229.04(N)
445577.68(E)

SWALE ℄

15'W ACC FUELING TRUCK DRIVE

CURVE 2
RADIUS=62.50'
LENGTH=147.026'
DELTA=134.7881
PC STA.=1+50.54
END STA.=2+97.56

SWALE ℄

20'W ACC SECURITY ROAD

GRAPHIC SCALE
1"=20'
0' 20' 40' 60' 80' 100'

N

–0+25 0+00 0+50 1+00 1+50 2+00 2+50

FUELING TRUCK ENTRANCE

DRY RETENTION POND 2
BOTTOM ELEV. = 5.00'
TOP ELEV. = 8.00'

STA. 0+45.00,
59.0'LT, R.35.0'
STA. 0+45.00,
50.0'LT, R.35.0'

STA. 1+50.60,
54.5'LT, R.39.5'

FUELING TRUCK POSITION
25' CLR. WIDTH

–0+25 0+00 0+50 1+00 1+50 2+00 2+50 3+00 3+50 4+00 4+50 5+00

CATAPULT ROAD (ACC)

FUELING TRUCK EXIT

INTERSECTION
FUELING TRUCK DRIVE STA. 2+97.56
CATAPULT ROAD STA. 1+94.96

STA. 2+55.00,
45.0'RT, R.25.0'
TOP OF BANK

STA. 4+91.00,
45.0'RT, R.25.0'
TOP OF BANK

PANTOGRAPH PROTECTIVE BOLLARDS
IAW DETAIL A1/C805

OIL/WATER SEPARATOR
IAW DETAIL A1/C803

MH60R MAIN ROTOR DIAMETER = 56.66'

HOT FUEL SPOT

DRY RETENTION POND 1
BOTTOM ELEV. = 5.00'
TOP ELEV. = 7.00'

TRAPEZOIDAL OVERFLOW CHANNEL (SODDED)
50'W AT ELEV. 6.00'
4:1 H:V SIDES

REFUEL TRUCK CLEARANCE RADIUS = 78.33'

CLEAR ZONE RADIUS = 100'

STA. 2+55.00,
151.0'RT, R.25.0'
TOP OF BANK

25'W ACC SHOULDER (TYPICAL)

STA. 4+91.00,
151.0'RT, R.17.0'
BOTTOM

TAXILANE BRAVO (PCC)

MKS	SYM	DESCRIPTION	DATE	APPR
---	---	---	---	---

NAVFAC

SEAL

A/E INFO

APPROVED

FOR COMMANDER NAVFAC / B.L.T.L.

ACTIVITY
--

SATISFACTORY TO DATE --

DES JWF DRW JWF CHK JWH

PROJECT MANAGER LOVE

IPT TECH. BRANCH HEAD --

CHIEF ENG/ARCH (CORE) FRANK

DEPARTMENT OF THE NAVY
NAVAL FACILITIES ENGINEERING COMMAND
IPT SOUTH ATLANTIC

NAVAL FACILITIES ENGINEERING COMMAND SOUTHEAST
NAVAL AIR STATION JACKSONVILLE

NAVAL AIR STATION JACKSONVILLE
JACKSONVILLE, FLORIDA

MH-60 APRON AND REPAIRS

GEOMETRY PLAN – HOT FUEL POSITION

SCALE: 1"=20'
EPROJECT NO.: 1291637
CONSTR. CONTR. NO. N69450–XX–C–XXXX
NAVFAC DRAWING NO. 15091985
SHEET 11 OF 44

C201

DRAWFORM REVISION: 7 AUGUST 2009

SHEET FORMAT IS 22" X 34". IF PRINTED SHEET IS NOT 22" X 34", THEN IT IS NOT TO SCALE

FILE NAME: P:\OBL\Project_Files\FLORIDA\NAS JACKSONVILLE FL(H)\N00207\694-MH-60 APRON AND REPAIR-1291637\Working Technical Files\Drawings\Sheet201 GEOMETRY PLAN - HOT FUEL POSITION.dwg LAYOUT NAME: C201 GEOMETRY PLAN - HOT FUEL POSITION PLOTTED: Monday, December 15, 2014 - 11:15am USER: jeffrey.e.frank

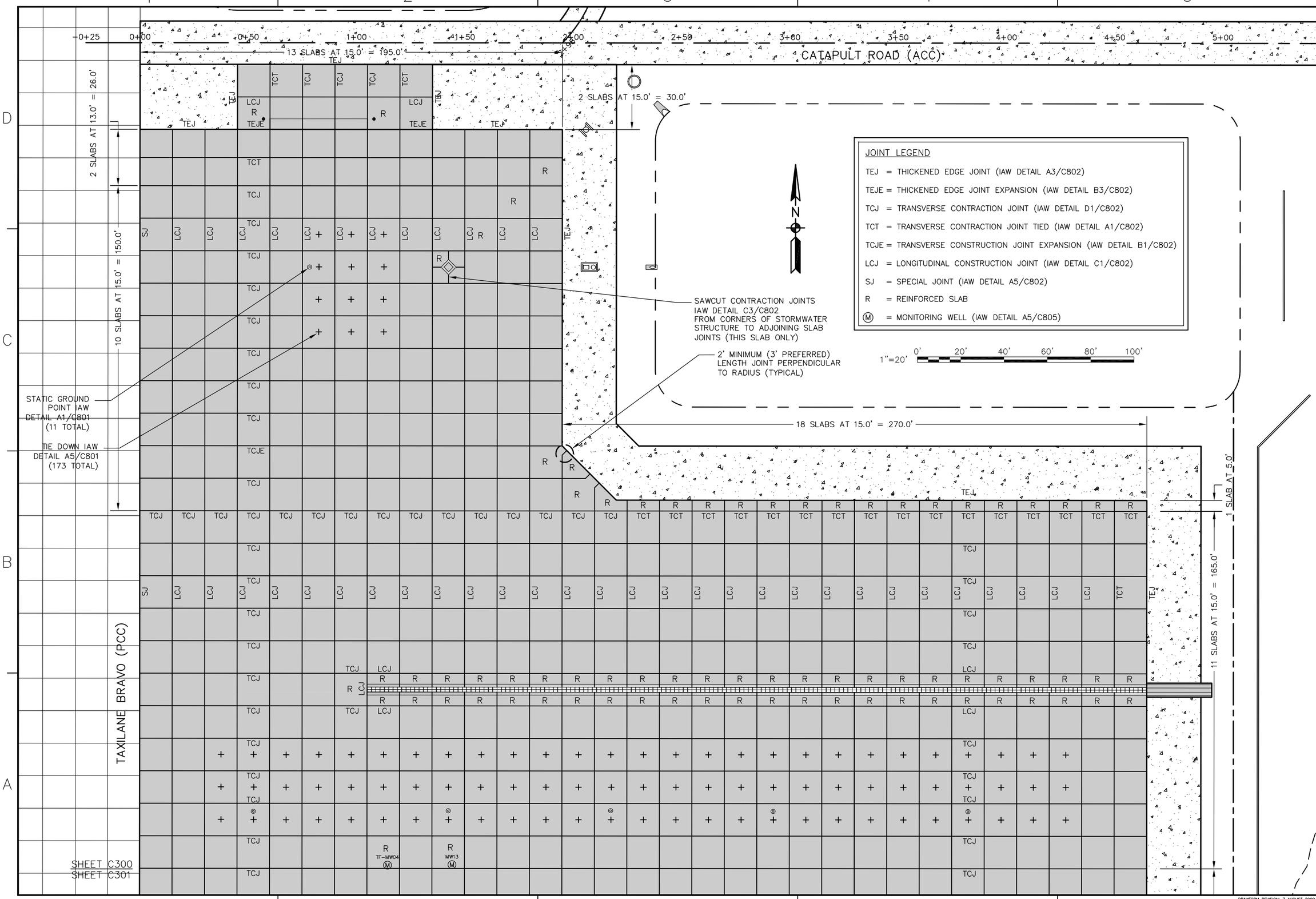

SYM	DESCRIPTION	DATE	APPR
--	--	--	--

NAVFAC

SEAL

A/E INFO

APPROVED

FOR COMMANDER NAVFAC / B.L.T.L.

ACTIVITY --

SATISFACTORY TO DATE --

DES JWF DRW JWF CHK JWH

PROJECT MANAGER LOVE

IPT TECH. BRANCH HEAD --

CHIEF ENG/ARCH (CORE) FRANK

DEPARTMENT OF THE NAVY
NAVAL FACILITIES ENGINEERING COMMAND
IPT SOUTH ATLANTIC

NAVAL FACILITIES ENGINEERING COMMAND SOUTHEAST
NAVAL AIR STATION JACKSONVILLE

NAVAL AIR STATION JACKSONVILLE, FLORIDA

MH-60 APRON AND REPAIRS

JOINT LAYOUT PLAN – NORTH

SCALE: 1"=20'

EPROJECT NO.: 1291637

CONSTR. CONTR. NO. N69450-XX-C-XXXX

NAVFAC DRAWING NO. 15091986

SHEET 12 OF 44

C300

DRAWFORM REVISION: 7 AUGUST 2009

FILE NAME: P:\CRB\Project_Files\FLORIDA\NAS JACKSONVILLE FLH\N00207\664-MH-60 APRON AND REPAIR-1291637\Working Technical Files\Drawings\Sheet300 JOINT LAYOUT PLAN - NORTH.dwg LAYOUT NAME: C300 JOINT LAYOUT PLAN - NORTH PLOTTED: Monday, December 15, 2014 - 1:53pm USER: jeffrey.w.frank

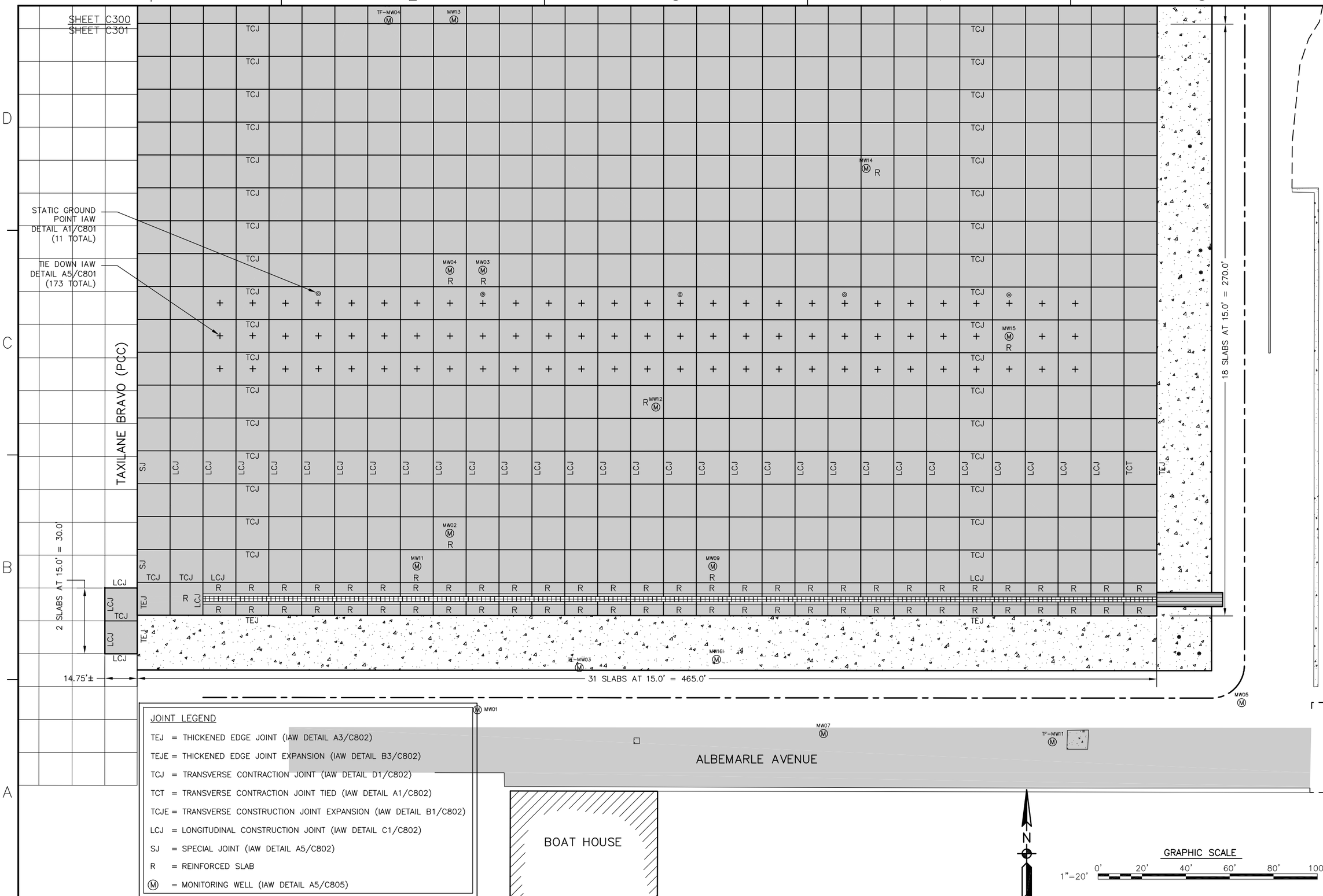

JOINT LEGEND

TEJ = THICKENED EDGE JOINT (IAW DETAIL A3/C802)

TEJE = THICKENED EDGE JOINT EXPANSION (IAW DETAIL B3/C802)

TCJ = TRANSVERSE CONTRACTION JOINT (IAW DETAIL D1/C802)

TCT = TRANSVERSE CONTRACTION JOINT TIED (IAW DETAIL A1/C802)

TCJE = TRANSVERSE CONSTRUCTION JOINT EXPANSION (IAW DETAIL B1/C802)

LCJ = LONGITUDINAL CONSTRUCTION JOINT (IAW DETAIL C1/C802)

SJ = SPECIAL JOINT (IAW DETAIL A5/C802)

R = REINFORCED SLAB

Ⓜ = MONITORING WELL (IAW DETAIL A5/C805)

SYM	DESCRIPTION	DATE	APPR
---	---	---	---

NAVFAC

SEAL

A/E INFO

APPROVED

FOR COMMANDER NAVFAC / B.L.T.L.

ACTIVITY --

SATISFACTORY TO DATE --

DES JWF DRW JWF CHK JWH

PROJECT MANAGER LOVE

IPT TECH. BRANCH HEAD --

CHIEF ENG/ARCH (CORE) FRANK

DEPARTMENT OF THE NAVY
IPT SOUTH ATLANTIC
NAVAL FACILITIES ENGINEERING COMMAND
NAVAL FACILITIES ENGINEERING COMMAND SOUTHEAST
NAVAL AIR STATION JACKSONVILLE
NAVAL AIR STATION JACKSONVILLE, FLORIDA

MH-60 APRON AND REPAIRS

JOINT LAYOUT PLAN – SOUTH

SCALE: 1"=20'

EPROJECT NO.: 1291637

CONSTR. CONTR. NO. N69450–XX–C–XXXX

NAVFAC DRAWING NO. 15091987

SHEET 13 OF 44

C301

DRAWFORM REVISION: 7 AUGUST 2009

SHEET FORMAT IS 22" X 34". IF PRINTED SHEET IS NOT 22" X 34", THEN IT IS NOT TO SCALE

FILE NAME: P:\CBL\Project_Files\FLORIDA\NAS JACKSONVILLE FL)H)N00207\664-MH-60 APRON AND REPAIR-1291637\Working Technical Files\Drawings\Sheet301 JOINT LAYOUT PLAN - SOUTH.dwg LAYOUT NAME: C301 JOINT LAYOUT PLAN - SOUTH PLOTTED: Monday, December 15, 2014 - 1:49pm USER: jeffrey.w.frank

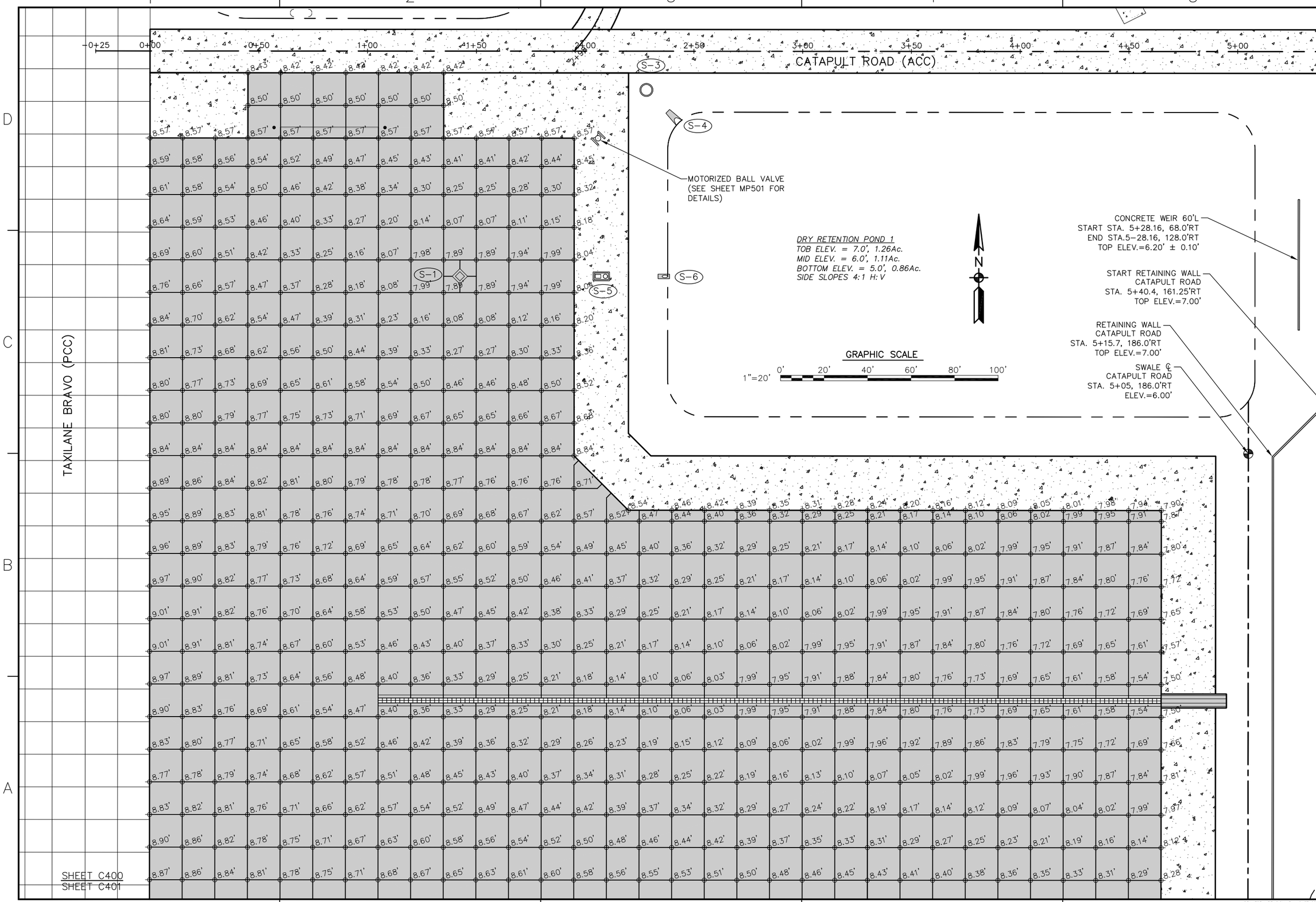

SYM	DESCRIPTION	DATE	APPR

NAVFAC

SEAL

A/E INFO

APPROVED

FOR COMMANDER NAVFAC / B.L.T.L

ACTIVITY

--

SATISFACTORY TO DATE --

DES JWF DRW JWF CHK JWH

PROJECT MANAGER LOVE

IPT TECH. BRANCH HEAD --

CHIEF ENG/ARCH (CORE) FRANK

DEPARTMENT OF THE NAVY
NAVAL FACILITIES ENGINEERING COMMAND
IPT SOUTH ATLANTIC

NAVAL FACILITIES ENGINEERING COMMAND SOUTHEAST
NAVAL AIR STATION JACKSONVILLE

NAVAL AIR STATION JACKSONVILLE, FLORIDA

MH-60 APRON AND REPAIRS

PAVEMENT GRADING PLAN – NORTH

SCALE: 1"=20'

EPROJECT NO.: 1291637

CONSTR. CONTR. NO. N69450-XX-C-XXXX

NAVFAC DRAWING NO. 15091988

SHEET 14 OF 44

C400

DRAWFORM REVISION: 7 AUGUST 2009

SHEET FORMAT IS 22" X 34". IF PRINTED SHEET IS NOT 22" X 34", THEN IT IS NOT TO SCALE

FILE NAME: P:\OBL\Project_Files\FLORIDA\NAS JACKSONVILLE FL\N00207\684-MH-60 APRON AND REPAIR-1291637\Working Technical Files\Drawings\Sheet400 PAVEMENT GRADING PLAN – NORTH.dwg LAYOUT NAME: C400 PAVEMENT GRADING PLAN – NORTH PLOTTED: Monday, December 15, 2014 – 11:42am USER: jeffrey.e.frank

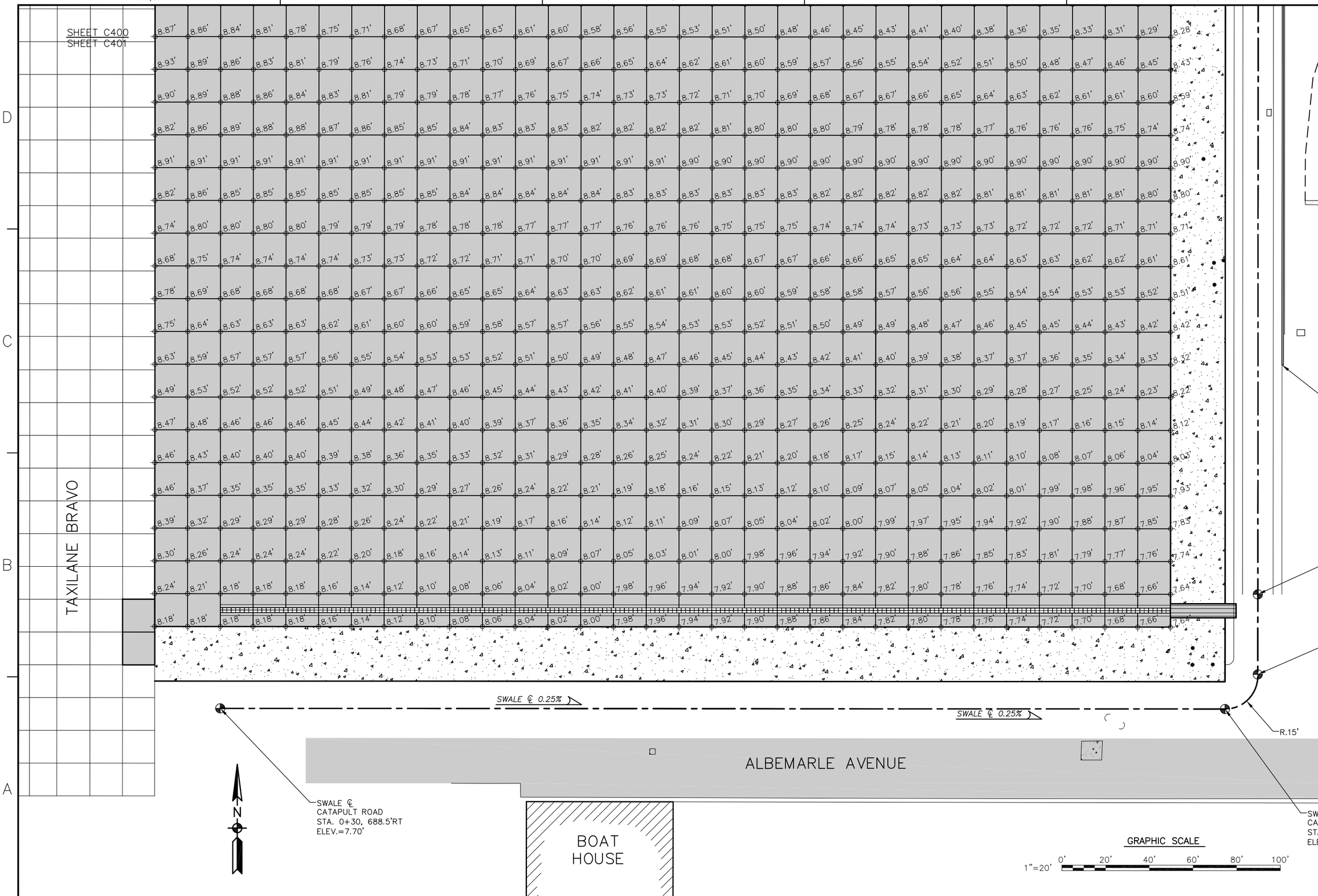

FILE NAME: P:\OBL\Project_Files\FLORIDA\NAS JACKSONVILLE FL\N00207\684-MH-60 APRON AND REPAIR-1291637\Working Technical Files\Drawings\Sheet401 PAVEMENT GRADING PLAN - SOUTH.dwg LAYOUT NAME: C401 PAVEMENT GRADING PLAN - SOUTH PLOTTED: Monday, December 15, 2014 - 12:46pm USER: jeffrey.w.frank

SYM	DESCRIPTION	DATE	APPR
---	---	---	---

NAVFAC

SEAL

A/E INFO

APPROVED

FOR COMMANDER NAVFAC / B.L.T.L.

ACTIVITY

--

SATISFACTORY TO DATE --

DES JWF | DRW JWF | CHK JWH

PROJECT MANAGER LOVE

IPT TECH. BRANCH HEAD --

CHIEF ENG/ARCH (CORE) FRANK

DEPARTMENT OF THE NAVY
NAVAL FACILITIES ENGINEERING COMMAND
IPT SOUTH ATLANTIC

NAVAL FACILITIES ENGINEERING COMMAND SOUTHEAST
NAVAL AIR STATION JACKSONVILLE

NAVAL AIR STATION JACKSONVILLE
JACKSONVILLE, FLORIDA

MH-60 APRON AND REPAIRS

PAVEMENT GRADING PLAN - SOUTH

SCALE: 1"=20'

EPROJECT NO.: 1291637

CONSTR. CONTR. NO. N69450-XX-C-XXXX

NAVFAC DRAWING NO. 15091989

SHEET 15 OF 44

C401

PWD SHEET NUMBER

DRAWFORM REVISION: 7 AUGUST 2009

SHEET FORMAT IS 22" X 34". IF PRINTED SHEET IS NOT 22" X 34", THEN IT IS NOT TO SCALE

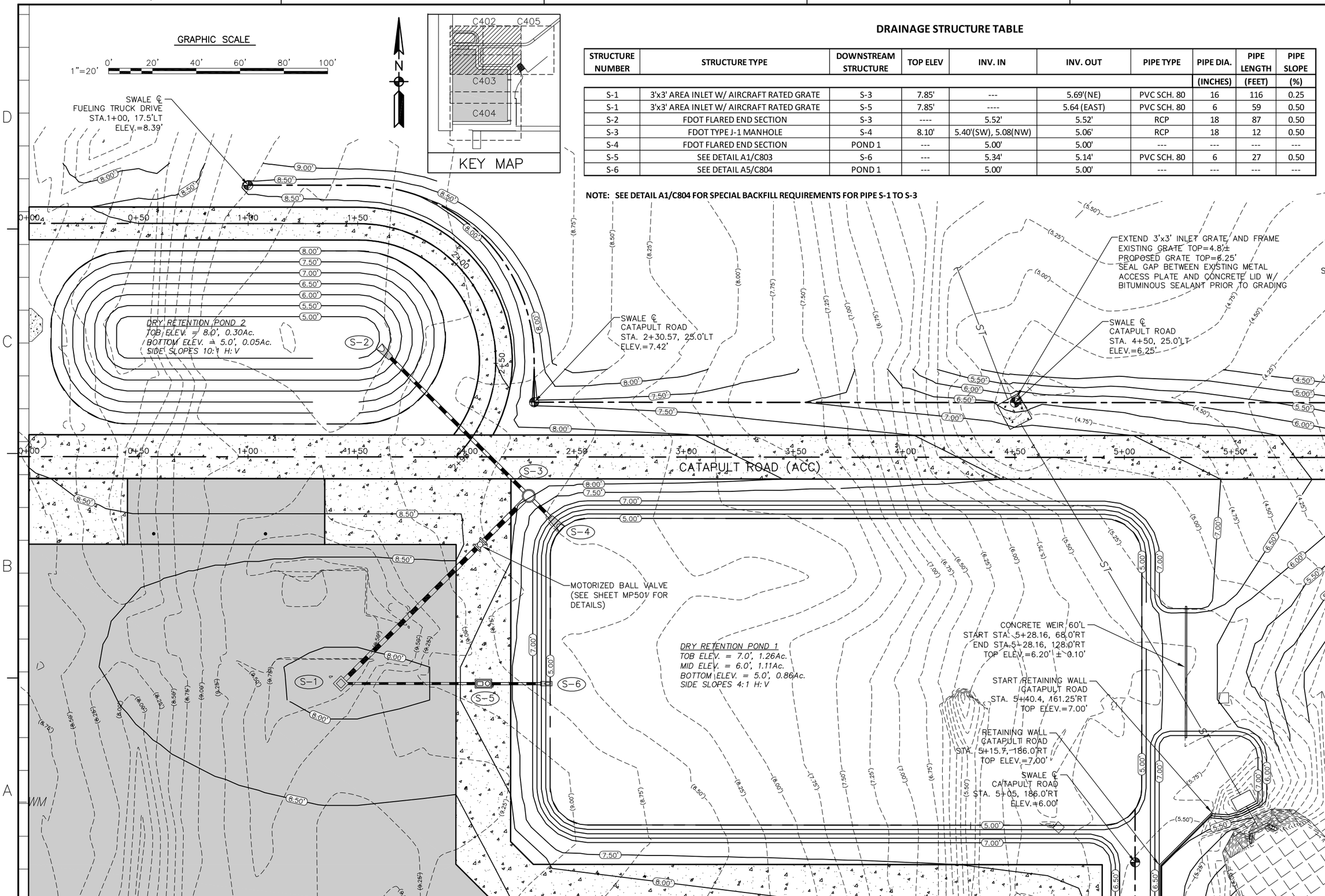

DRAINAGE STRUCTURE TABLE

STRUCTURE NUMBER	STRUCTURE TYPE	DOWNSTREAM STRUCTURE	TOP ELEV	INV. IN	INV. OUT	PIPE TYPE	PIPE DIA. (INCHES)	PIPE LENGTH (FEET)	PIPE SLOPE (%)
S-1	3'x3' AREA INLET W/ AIRCRAFT RATED GRATE	S-3	7.85'	---	5.69'(NE)	PVC SCH. 80	16	116	0.25
S-1	3'x3' AREA INLET W/ AIRCRAFT RATED GRATE	S-5	7.85'	----	5.64 (EAST)	PVC SCH. 80	6	59	0.50
S-2	FDOT FLARED END SECTION	S-3	----	5.52'	5.52'	RCP	18	87	0.50
S-3	FDOT TYPE J-1 MANHOLE	S-4	8.10'	5.40'(SW), 5.08(NW)	5.06'	RCP	18	12	0.50
S-4	FDOT FLARED END SECTION	POND 1	---	5.00'	5.00'	---	---	---	---
S-5	SEE DETAIL A1/C803	S-6	---	5.34'	5.14'	PVC SCH. 80	6	27	0.50
S-6	SEE DETAIL A5/C804	POND 1	---	5.00'	5.00'	---	---	---	---

NOTE: SEE DETAIL A1/C804 FOR SPECIAL BACKFILL REQUIREMENTS FOR PIPE S-1 TO S-3

SYM	DESCRIPTION	DATE	APPR
---	---	---	---

NAVFAC

A/E INFO
APPROVED
FOR COMMANDER NAVFAC / B.L.T.L.
ACTIVITY
--
SATISFACTORY TO DATE --
DES JWF DRW JWF CHK JWH
PROJECT MANAGER LOVE
IPT TECH. BRANCH HEAD --
CHIEF ENG/ARCH (CORE) FRANK

DEPARTMENT OF THE NAVY
NAVAL FACILITIES ENGINEERING COMMAND SOUTHEAST
IPT SOUTH ATLANTIC
NAVAL FACILITIES ENGINEERING COMMAND
NAVAL AIR STATION JACKSONVILLE
NAVAL AIR STATION JACKSONVILLE, FLORIDA
MH-60 APRON AND REPAIRS
SITE GRADING PLAN – NORTH

SCALE: 1"=20'
EPROJECT NO.: 1291637
CONSTR. CONTR. NO. N69450-XX-C-XXXX
NAVFAC DRAWING NO. 15091990
SHEET 16 OF 44
C402

DRAWFORM REVISION: 7 AUGUST 2009

FILE NAME: P:\CBL\Project_Files\FLORIDA\MS JACKSONVILLE FL\H\K00207\664-MH-60 APRON AND REPAIRS-1291637\Working Technical Files\Drawings\SheetC402 SITE GRADING PLAN - NORTH.dwg LAYOUT NAME: C402 SITE GRADING PLAN - NORTH PLOTTED: Monday, December 15, 2014 - 12:47pm USER: jeffrey.w.frank

SHEET FORMAT IS 22" X 34" - IF PRINTED SHEET IS NOT 22" X 34" THEN IT IS NOT TO SCALE

DRY RETENTION POND 1
TOB ELEV. = 7.0', 1.26Ac.
MID ELEV. = 6.0', 1.11Ac.
BOTTOM ELEV. = 5.0', 0.86Ac.
SIDE SLOPES 4:1 H:V

CONCRETE WEIR 60'L
START STA. 5+28.16, 68.0'RT
END STA. 5+28.16, 128.0'RT
TOP ELEV.=6.20' ± 0.10'

START RETAINING WALL
CATAPULT ROAD
STA. 5+40.4, 161.25'RT
TOP ELEV.=7.00'

RETAINING WALL
CATAPULT ROAD
STA. 5+15.7, 186.0'RT
TOP ELEV.=7.00'

SWALE C
CATAPULT ROAD
STA. 5+05, 186.0'RT
ELEV.=6.00'

S-1 S-5 S-6

GRAPHIC SCALE
1"=20'
0' 20' 40' 60' 80' 100'

KEY MAP
C402 C405 C403 C404

SYM	DESCRIPTION	DATE	APPR
---	---	---	---

NAVFAC

SEAL

A/E INFO

APPROVED

FOR COMMANDER NAVFAC / B.L.T.L.

ACTIVITY --

SATISFACTORY TO DATE --

DES JWF DRW JWF CHK JWH

PROJECT MANAGER LOVE

IPT TECH. BRANCH HEAD --

CHIEF ENG/ARCH (CORE) FRANK

DEPARTMENT OF THE NAVY
IPT SOUTH ATLANTIC
NAVAL FACILITIES ENGINEERING COMMAND
NAVAL FACILITIES ENGINEERING COMMAND SOUTHEAST
NAVAL AIR STATION JACKSONVILLE
NAVAL AIR STATION JACKSONVILLE, FLORIDA

MH-60 APRON AND REPAIRS

SITE GRADING PLAN – CENTRAL

SCALE: 1"=20'
EPROJECT NO.: 1291637
CONSTR. CONTR. NO. N69450-XX-C-XXXX
NAVFAC DRAWING NO. 15091991
SHEET 17 OF 44
C403

DRAWFORM REVISION: 7 AUGUST 2009

FILE NAME: P:\CBL\Project_Files\FLORIDA\MAS JACKSONVILLE FL\H)N00207\684-MH-60 APRON AND REPAIR-1291637\Working Technical Files\Drawings\Sheet403 SITE GRADING PLAN - CENTRAL.dwg LAYOUT NAME: C403 SITE GRADING PLAN - CENTRAL PLOTTED: Monday, December 15, 2014 - 12:50pm USER: jeffrey.w.frank

SHEET FORMAT IS 22" X 34" IF PRINTED SHEET IS NOT 22" X 34" THEN IT IS NOT TO SCALE

END RETAINING WALL
CATAPULT ROAD
STA. 5+15.7, 531.0'RT
TOP ELEV.=7.00'

SWALE ℄
CATAPULT ROAD
STA. 5+05, 636.0'RT
ELEV.=6.00'

SWALE ℄
CATAPULT ROAD
STA. 5+05, 672.6'RT
ELEV.=6.32'

SWALE ℄ 0.25%

SWALE ℄ 0.25%

R.15'

ALBEMARLE AVENUE

SWALE ℄
CATAPULT ROAD
STA. 0+30, 688.5'RT
ELEV.=7.70'

SWALE ℄
CATAPULT ROAD
STA. 4+90, 688.5'RT
ELEV.=6.54'

BOAT HOUSE

N

GRAPHIC SCALE

1"=20' 0' 20' 40' 60' 80' 100'

C402 C405
C403
C404

KEY MAP

SYM	DESCRIPTION	DATE	APPR
---	---	---	---

NAVFAC

SEAL

A/E INFO

APPROVED

FOR COMMANDER NAVFAC / B.L.T.L.

ACTIVITY

--

SATISFACTORY TO DATE --

DES JWF DRW JWF CHK JWH

PROJECT MANAGER LOVE

IPT TECH. BRANCH HEAD --

CHIEF ENG/ARCH (CORE) FRANK

DEPARTMENT OF THE NAVY
NAVAL FACILITIES ENGINEERING COMMAND
IPT SOUTH ATLANTIC
NAVAL FACILITIES ENGINEERING COMMAND SOUTHEAST
NAVAL AIR STATION JACKSONVILLE
NAVAL AIR STATION JACKSONVILLE, FLORIDA

MH-60 APRON AND REPAIRS

SITE GRADING PLAN – SOUTH

SCALE: 1"=20'

EPROJECT NO.: 1291637

CONSTR. CONTR. NO. N69450–XX–C–XXXX

NAVFAC DRAWING NO. 15091992

SHEET 18 OF 44

C404

DRAWFORM REVISION: 7 AUGUST 2009

FILE NAME: P:\CBL\Project_Files\FLORIDA\MAS JACKSONVILLE FLH\N00207\664-MH-60 APRON AND REPAIR-1291637\Working Technical Files\Drawings\Sheet404 SITE GRADING PLAN – SOUTH.dwg LAYOUT NAME: C404 SITE GRADING PLAN – SOUTH PLOTTED: Monday, December 15, 2014 – 1:02pm USER: jeffrey.w.frank

SHEET FORMAT IS 22" X 34" – IF PRINTED SHEET IS NOT 22" X 34" THEN IT IS NOT TO SCALE

EXTEND 3'x3' INLET GRATE AND FRAME
EXISTING GRATE TOP=4.8'±
PROPOSED GRATE TOP=6.25'
SEAL GAP BETWEEN EXISTING METAL
ACCESS PLATE AND CONCRETE LID W/
BITUMINOUS SEALANT PRIOR TO GRADING

SWALE ℄
CATAPULT ROAD
STA. 4+50, 25.0'LT
ELEV.=6.25'

SWALE ℄
CATAPULT ROAD
STA. 7+00, 25.0'LT
ELEV.=4.90'

CATAPULT ROAD (ACC)

3+00 3+50 4+00 4+50 5+00 5+50 6+00 6+50 7+00 7+25

DRY RETENTION POND 1
TOB ELEV. = 7.0', 1.26Ac.
MID ELEV. = 6.0', 1.11Ac.
BOTTOM ELEV. = 5.0', 0.86Ac.
SIDE SLOPES 4:1 H:V

CONCRETE WEIR 60'L
START STA. 5+28.16, 68.0'RT
END STA. 5+28.16, 128.0'RT
TOP ELEV.=6.20' ± 0.10'

START RETAINING WALL
CATAPULT ROAD
STA. 5+40.4, 161.25'RT
TOP ELEV.=7.00'

RETAINING WALL
CATAPULT ROAD
STA. 5+15.7, 186.0'RT
TOP ELEV.=7.00'

SWALE ℄
CATAPULT ROAD
STA. 5+05, 186.0'RT
ELEV.=6.00'

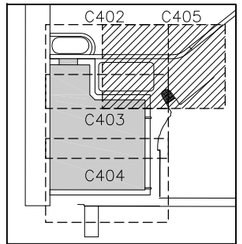

KEY MAP

N

GRAPHIC SCALE

1"=20' 0' 20' 40' 60' 80' 100'

SYM	DESCRIPTION	DATE	APPR
---	---	---	---

NAVFAC

SEAL

A/E INFO

APPROVED

FOR COMMANDER NAVFAC / B.L.T.L.

ACTIVITY --

SATISFACTORY TO DATE --

DES JWF DRW JWF CHK JWH

PROJECT MANAGER LOVE

IPT TECH. BRANCH HEAD --

CHIEF ENG/ARCH (CORE) FRANK

DEPARTMENT OF THE NAVY
NAVAL FACILITIES ENGINEERING COMMAND
IPT SOUTH ATLANTIC

NAVAL FACILITIES ENGINEERING COMMAND SOUTHEAST
NAVAL AIR STATION JACKSONVILLE

NAVAL AIR STATION JACKSONVILLE
JACKSONVILLE, FLORIDA

MH-60 APRON AND REPAIRS

SITE GRADING PLAN – EAST

SCALE: 1"=20'

EPROJECT NO.: 1291637

CONSTR. CONTR. NO. N69450-XX-C-XXXX

NAVFAC DRAWING NO. 15091993

SHEET 19 OF 44

C405

DRAWFORM REVISION: 7 AUGUST 2009

SHEET FORMAT IS 22" X 34". IF PRINTED SHEET IS NOT 22" X 34", THEN IT IS NOT TO SCALE

FILE NAME: P:\QBL\Project_Files\FLORIDA\NAS JACKSONVILLE FL\HN00207\684-MH-60 APRON AND REPAIR-1291637\Working Technical Files\Drawings\Sheet405 SITE GRADING PLAN - EAST.dwg LAYOUT NAME: C405 SITE GRADING PLAN - EAST PLOTTED: Monday, December 15, 2014 - 1:14pm USER: jeffrey.w.frank

TAXIWAY HOLDING POSITION MARKING
2 SOLID 12"W YELLOW LINES,
2 DASHED 12"W YELLOW LINES,
OUTLINED IN BLACK
IAW FAA AC 150/5340

FUELING TRUCK
POSITION MARKING
8"W YELLOW

APRON EDGE MARKING
6"W BLACK
6"W YELLOW
6"W BLACK
6"W YELLOW
6"W BLACK

MATCH EXISTING
CENTERLINE STRIPING
(TYPICAL)

GROUNDING POINT
MARKING IAW DETAIL
A1/C801
(TYPICAL OF 11 POINTS)

8"W YELLOW STRIPED BOX
FUELING TRUCK POSITION
OUTSIDE DIMENSIONS
24'W x 195'L

HELO SPOT MARKING
NON-RETROREFLECTIVE
YELLOW 36" HIGH
NUMERAL

R.40.00' (TYPICAL)

6" YELLOW STRIPE
W/ 6" BLACK OUTLINE
BOTH SIDES (TYPICAL)

R.28.00' (TYPICAL)

REMOVE TAXIWAY EDGE MARKINGS
FULL LENGTH OF HELICOPTER APRON
MIN. 25' NORTH OF FUEL TRUCK DRIVE
MIN. 100' SOUTH OF SOUTHWEST
APRON CORNER IAW § 32 01 11.51

TAXILANE BRAVO

CATAPULT ROAD

0+25 0+00 0+50 1+00 1+50 2+00 2+50 3+00 3+50 4+00 4+50 5+00 5+50 6+00

71.00' 51.50' 46.00' 50.50' 78.50' 91.00' 91.00' 28.00' 50.50'

68.00' 81.00' 81.00' 81.00' 81.00'

NOTE:

REMOVE TAXIWAY HOLDING POSITION MARKING IDENTIFIED ON SHEET C002 IAW § 32 01 11.51. MARK CONTINUATION OF EDGE STRIPING BOTH SIDES.

APRON EDGE MARKING
6"W BLACK
6"W YELLOW
6"W BLACK
6"W YELLOW
6"W BLACK

N

GRAPHIC SCALE

1"=40' 0' 40' 80' 120' 160' 200'

REMOVE HOLDING POSITION

SYM	DESCRIPTION	DATE	APPR
---	---	---	---

NAVFAC

SEAL

A/E INFO

APPROVED

FOR COMMANDER NAVFAC / B.L.T.L.

ACTIVITY

--

SATISFACTORY TO DATE --

DES JWF DRW JWF CHK JWH

PROJECT MANAGER LOVE

IPT TECH. BRANCH HEAD --

CHIEF ENG/ARCH (CORE) FRANK

DEPARTMENT OF THE NAVY
NAVAL FACILITIES ENGINEERING COMMAND
IPT SOUTH ATLANTIC

NAVAL FACILITIES ENGINEERING COMMAND SOUTHEAST
NAVAL AIR STATION JACKSONVILLE

NAVAL AIR STATION JACKSONVILLE JACKSONVILLE, FLORIDA

MH-60 APRON AND REPAIRS

PAVEMENT MARKING PLAN

SCALE: 1"=40'

EPROJECT NO.: 1291637

CONSTR. CONTR. NO. N69450-XX-C-XXXX

NAVFAC DRAWING NO. 15091994

SHEET 20 OF 44

C500

PWD SHEET NUMBER --

DRAWFORM REVISION: 7 AUGUST 2009

SHEET FORMAT IS 22" X 34". IF PRINTED SHEET IS NOT 22" X 34" THEN IT IS NOT TO SCALE

FILE NAME: P:\CBL\Project_Files\FLORIDA\NAS JACKSONVILLE FL(H)\N00207\684-MH-60 APRON AND REPAIR-1291637\Working Technical Files\Drawings\Sheet C500 PAVEMENT MARKING PLAN.dwg LAYOUT NAME: C500 PAVEMENT MARKING PLAN PLOTTED: Monday, December 15, 2014 - 1:16pm USER: jeffrey.w.frank

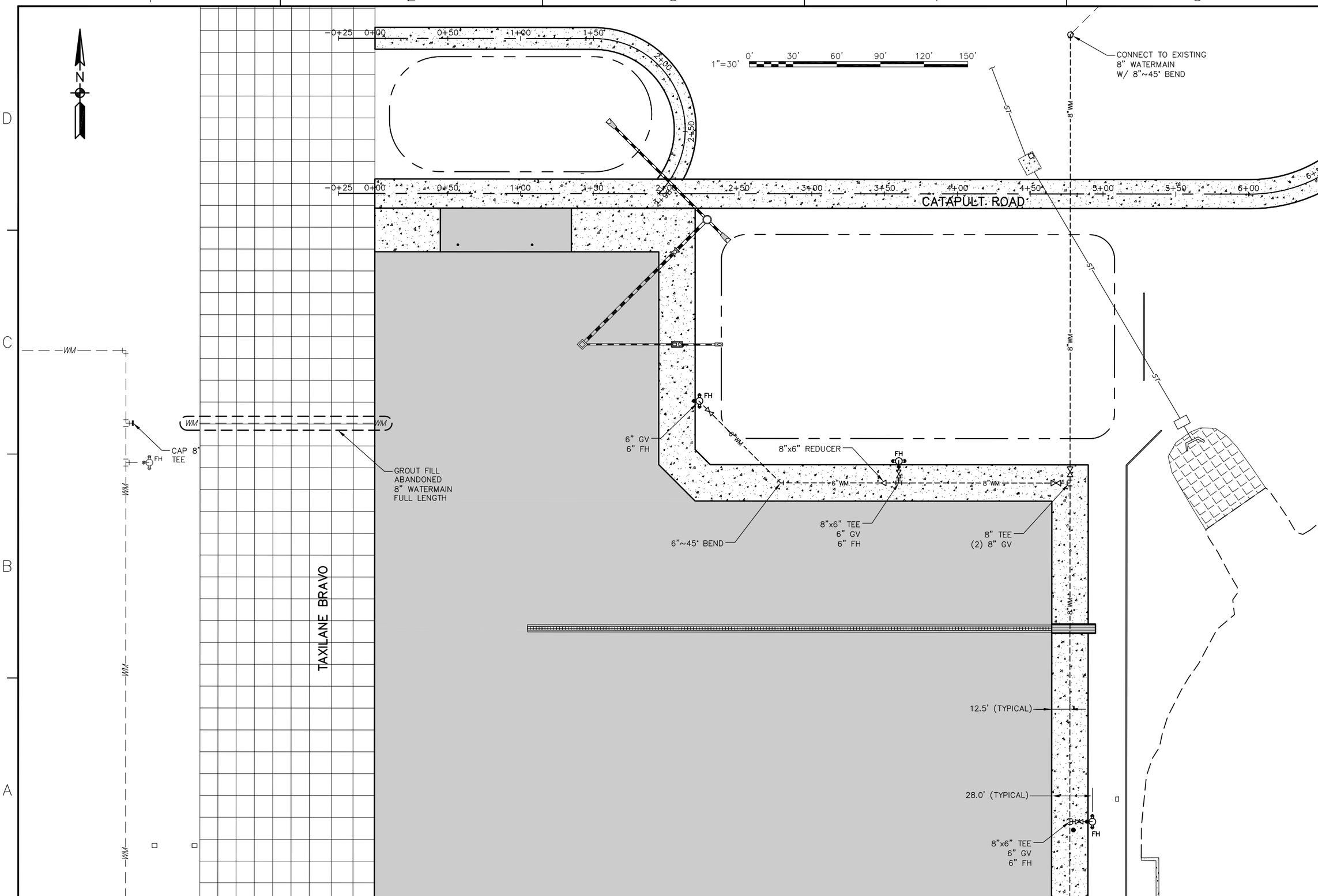

APPR	DATE	DESCRIPTION	SYM
---	---	---	---

NAVFAC

SEAL

A/E INFO

APPROVED

FOR COMMANDER NAVFAC / B.L.T.L.

ACTIVITY

--

SATISFACTORY TO DATE --

DES JWF DRW JWF CHK JWH

PROJECT MANAGER LOVE

IPT TECH. BRANCH HEAD --

CHIEF ENG/ARCH (CORE) FRANK

DEPARTMENT OF THE NAVY
NAVAL FACILITIES ENGINEERING COMMAND
IPT SOUTH ATLANTIC
NAVAL FACILITIES ENGINEERING COMMAND SOUTHEAST
NAVAL AIR STATION JACKSONVILLE
NAVAL AIR STATION JACKSONVILLE, FLORIDA

MH-60 APRON AND REPAIRS

WATER DISTRIBUTION PLAN – NORTH

SCALE: 1"=30'

EPROJECT NO.: 1291637

CONSTR. CONTR. NO. N69450–XX–C–XXXX

NAVFAC DRAWING NO. 15091995

SHEET 21 OF 44

C600

DRAWFORM REVISION: 7 AUGUST 2009

FILE NAME: P:\CIBL\Project_Files\FLORIDA\NAS JACKSONVILLE FL(H)N00207\664-MH-60 APRON AND REPAIR-1291637\Working Technical Files\Drawings\Sheet600 WATER DISTRIBUTION PLAN - NORTH.dwg LAYOUT NAME: C600 WATER DISTRIBUTION PLAN - NORTH PLOTTED: Monday, December 15, 2014 - 1:17pm USER: jeffrey.w.frank

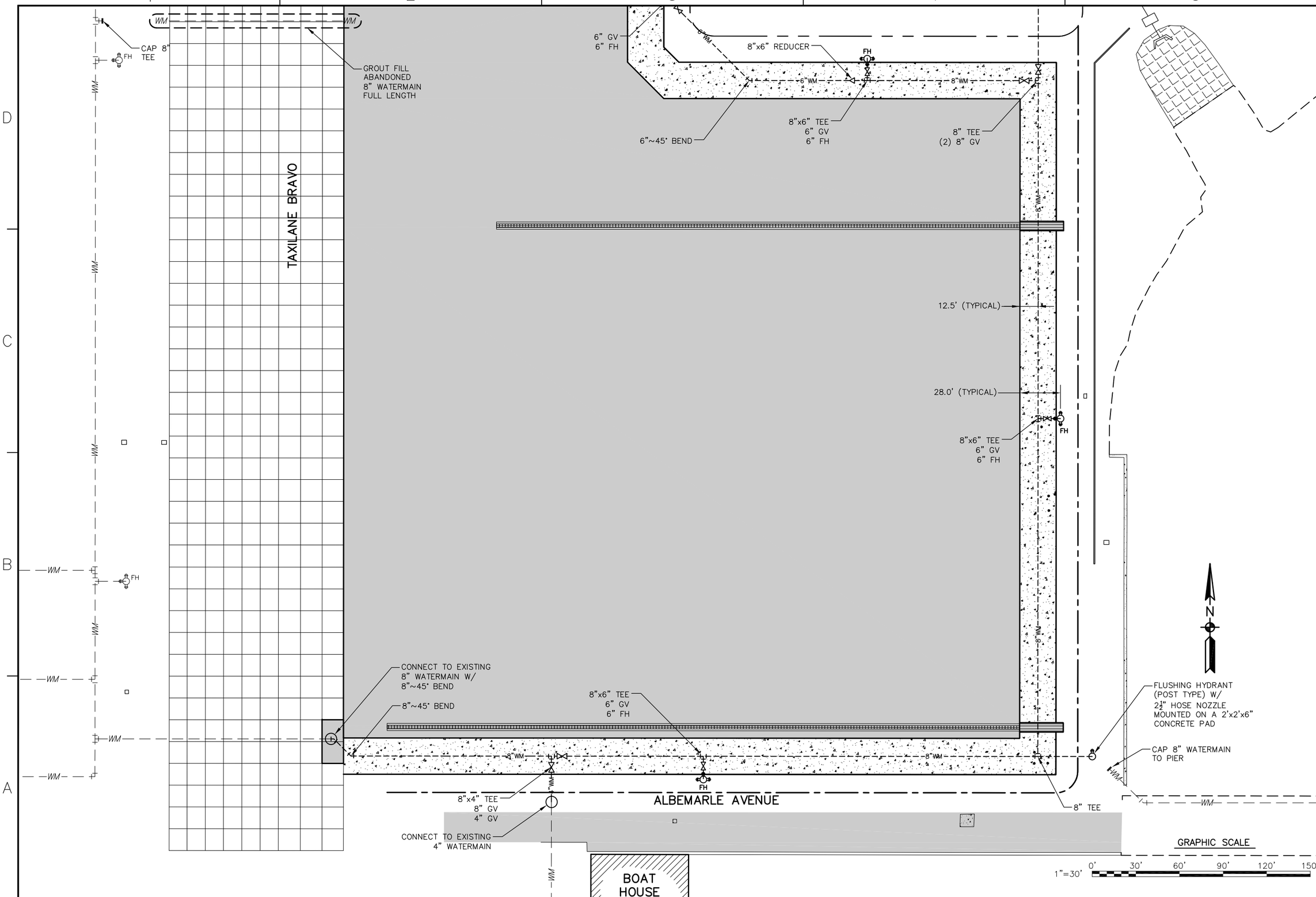

SYM	DESCRIPTION	DATE	APPR
---	---	---	---

SEAL

A/E INFO

APPROVED

FOR COMMANDER NAVFAC / B.L.T.L.

ACTIVITY

--

SATISFACTORY TO DATE --

DES JWF DRW JWF CHK JWF

PROJECT MANAGER LOVE

IPT TECH. BRANCH HEAD --

CHIEF ENG/ARCH (CORE) FRANK

DEPARTMENT OF THE NAVY
NAVAL FACILITIES ENGINEERING COMMAND
IPT SOUTH ATLANTIC

NAVAL FACILITIES ENGINEERING COMMAND SOUTHEAST
NAVAL AIR STATION JACKSONVILLE

NAVAL AIR STATION JACKSONVILLE, FLORIDA

MH-60 APRON AND REPAIRS

WATER DISTRIBUTION PLAN – SOUTH

SCALE: 1"=30'

EPROJECT NO.: 1291637

CONSTR. CONTR. NO. N69450–XX–C–XXXX

NAVFAC DRAWING NO. 15091996

SHEET 22 OF 44

C601

DRAWFORM REVISION: 7 AUGUST 2009

SHEET FORMAT IS 22" X 34" – IF PRINTED SHEET IS NOT 22" X 34" THEN IT IS NOT TO SCALE

FILE NAME: P:\CBL\Project_Files\FLORIDA\NAS JACKSONVILLE FL\H\N00207\664-MH-60 APRON AND REPAIR-1291637\Working Technical Files\Drawings\Sheet601 WATER DISTRIBUTION PLAN – SOUTH.dwg LAYOUT NAME: C601 WATER DISTRIBUTION PLAN – SOUTH PLOTTED: Monday, December 15, 2014 – 1:18pm USER: jeffrey.w.frank

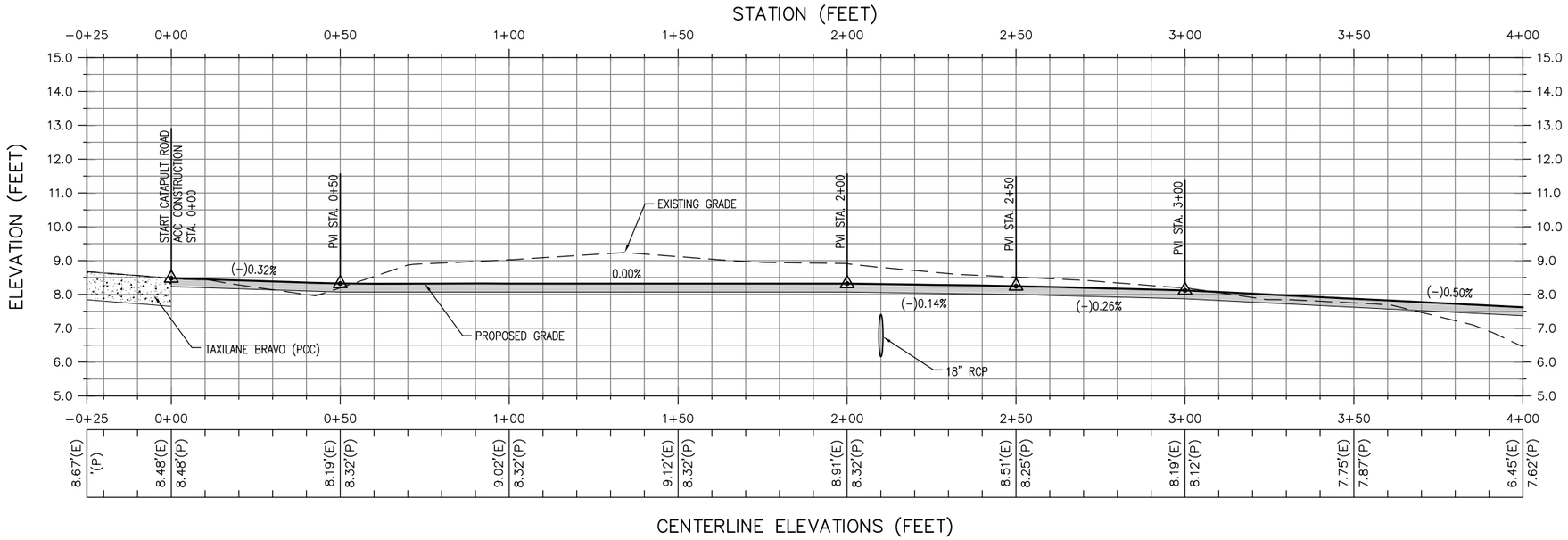

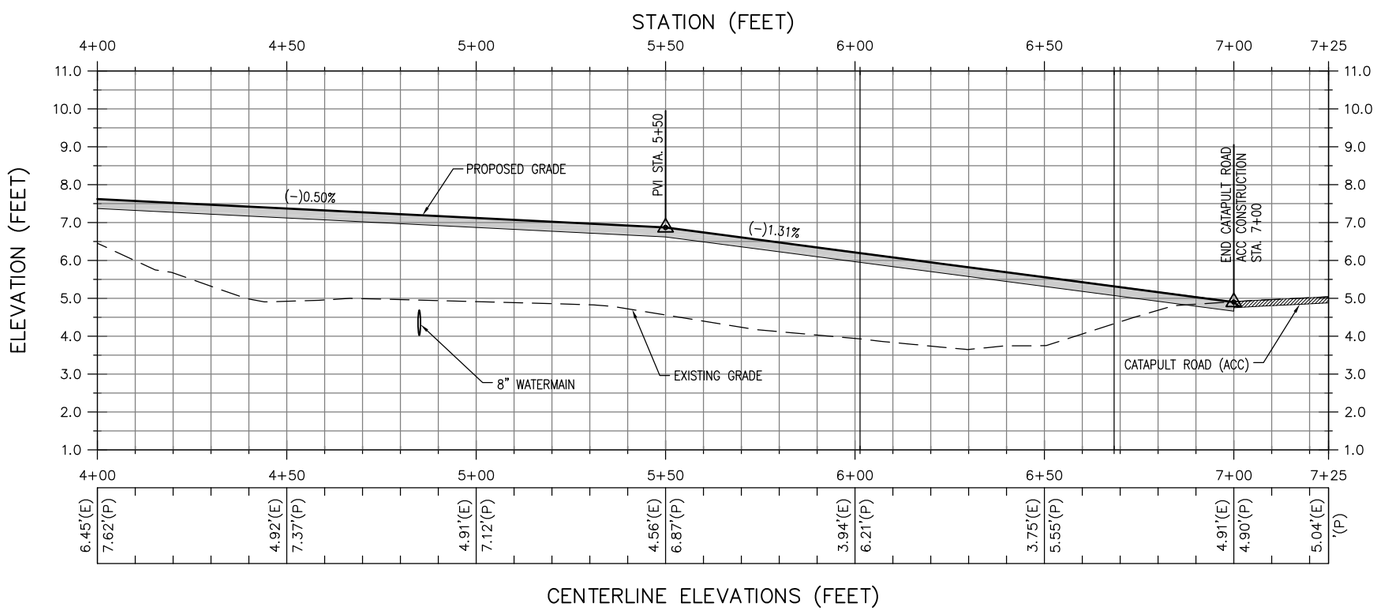

STATION (-)0+25 TO 7+25

HORIZONTAL SCALE - 1"=20'
VERTICAL SCALE - 1"=2'

GRAPHIC SCALE

1"=20' 0' 20' 40' 60' 80' 100'
1"=2' 0' 2' 4' 6' 7' 8'

STM	DESCRIPTION	DATE	APPR
----	----	----	----

NAVFAC

SEAL

A/E INFO

APPROVED

FOR COMMANDER NAVFAC / B.L.T.L.

ACTIVITY

--

SATISFACTORY TO DATE --

DES JWF | DRW JWF | CHK JWH

PROJECT MANAGER LOVE

IPT TECH. BRANCH HEAD --

CHIEF ENG/ARCH (CORE) FRANK

DEPARTMENT OF THE NAVY
IPT SOUTH ATLANTIC
NAVAL FACILITIES ENGINEERING COMMAND
NAVAL FACILITIES ENGINEERING COMMAND SOUTHEAST
NAVAL AIR STATION JACKSONVILLE
NAVAL AIR STATION JACKSONVILLE, FLORIDA
MH-60 APRON AND REPAIRS
CATAPULT ROAD PROFILE

SCALE: H:1"=20' V:1"=2'

EPROJECT NO.: 1291637

CONSTR. CONTR. NO. N69450-XX-C-XXXX

NAVFAC DRAWING NO. 15091997

SHEET 23 OF 44

C700

DRAWFORM REVISION: 7 AUGUST 2009

FILE NAME: P:\OBL\Project_Files\FLORIDA\NAS JACKSONVILLE FL(H)N00207\664-MH-60 APRON AND REPAIR-1291637\Working Technical Files\Drawings\Sheet\C700 CATAPULT ROAD PROFILE.dwg LAYOUT NAME: C700 CATAPULT ROAD PROFILE PLOTTED: Monday, December 15, 2014 - 1:20pm USER: jeffrey.w.frank

STATION -0+00

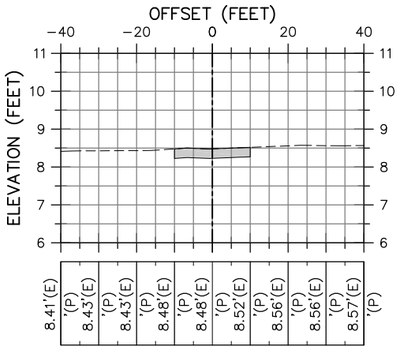

STATION 0+50

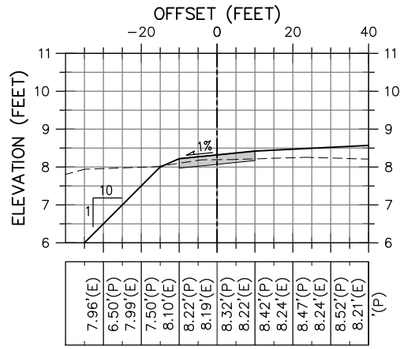

STATION 1+00

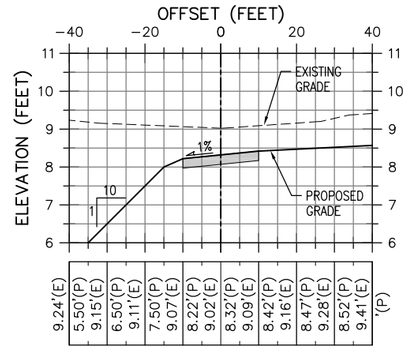

STATION 1+50

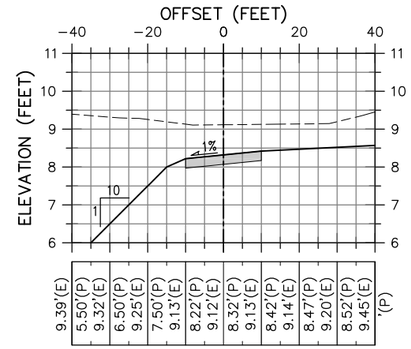

STATION 2+00

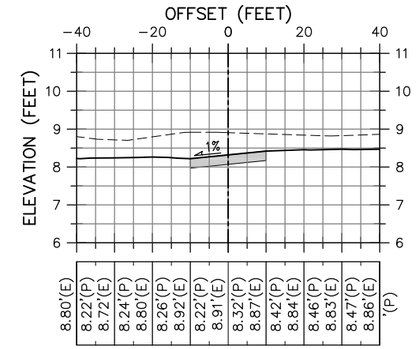

STATION 2+50

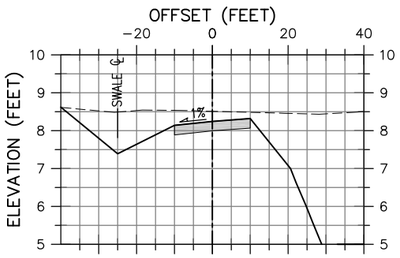

STATION 3+00

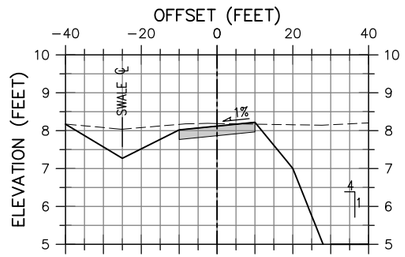

STATION 3+50

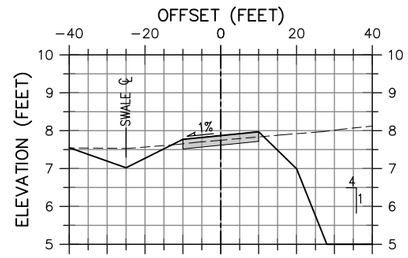

STATION 4+00

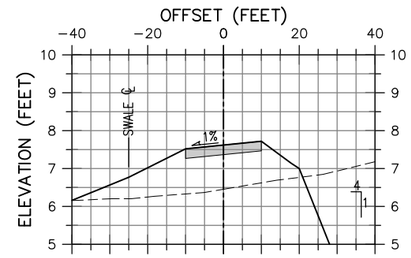

STATION 4+50

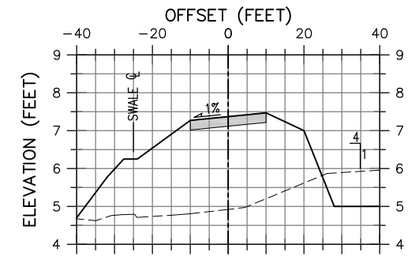

STATION 5+00

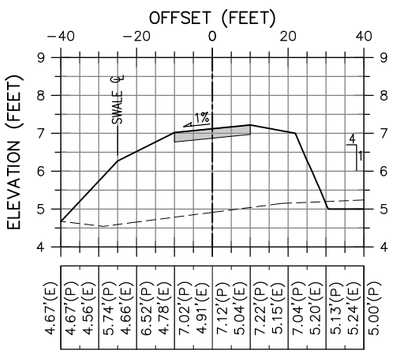

STATION 5+50

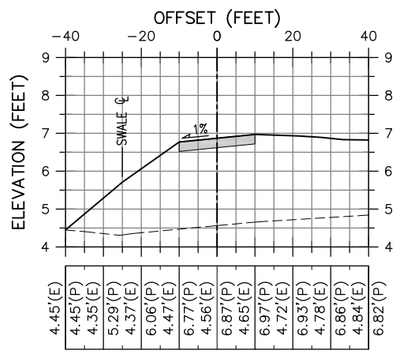

STATION 6+00

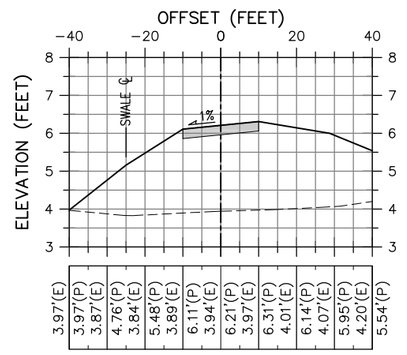

STATION 6+50

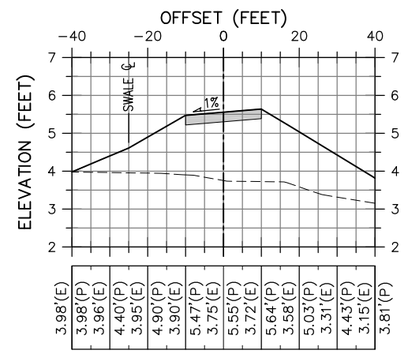

STATION 7+00

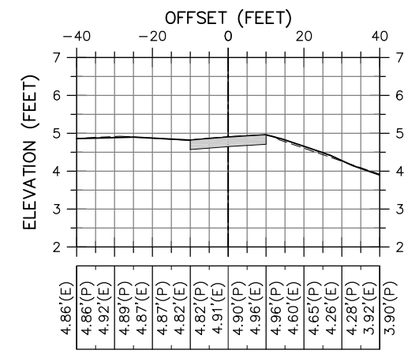

GRAPHIC SCALE

1"=20' 0' 20' 40' 60' 80' 100'

1"=2' 0' 2' 4' 6' 7' 8'

STM	DESCRIPTION	DATE	APPR
---	---	---	---
---	---	---	---
---	---	---	---
---	---	---	---
---	---	---	---
---	---	---	---
---	---	---	---
---	---	---	---

NAVFAC

SEAL

A/E INFO

APPROVED

FOR COMMANDER NAVFAC / B.L.T.L.

ACTIVITY --

SATISFACTORY TO DATE --

DES JWF DRW JWF CHK JWH

PROJECT MANAGER LOVE

IPT TECH. BRANCH HEAD --

CHIEF ENG/ARCH (CORE) FRANK

DEPARTMENT OF THE NAVY
NAVAL FACILITIES ENGINEERING COMMAND
IPT SOUTH ATLANTIC

NAVAL FACILITIES ENGINEERING COMMAND
NAVAL AIR STATION JACKSONVILLE

NAVAL AIR STATION JACKSONVILLE, FLORIDA

MH-60 APRON AND REPAIRS

CATAPULT ROAD CROSS SECTIONS

SCALE: H:1"=20' V:1"=2'

EPROJECT NO.: 1291637

CONSTR. CONTR. NO. N69450-XX-C-XXXX

NAVFAC DRAWING NO. 15091998

SHEET 24 OF 44

C701

DRAWFORM REVISION: 7 AUGUST 2009

FILE NAME: P:\CRL\Project_Files\FLORIDA\JAS JACKSONVILLE FL(H)\00207\664-MH-60 APRON AND REPAIR-1291637\Working Technical Files\Drawings\Sheet701 CATAPULT ROAD CROSS SECTIONS.dwg LAYOUT NAME: C701 CATAPULT ROAD CROSS SECTIONS PLOTTED: Monday, December 15, 2014 - 1:22pm USER: jeffrey.w.frank

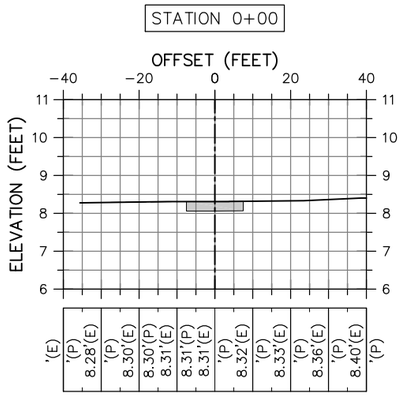

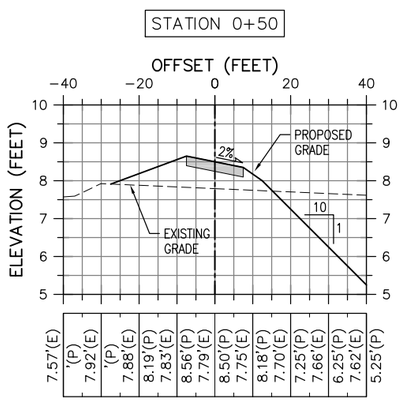

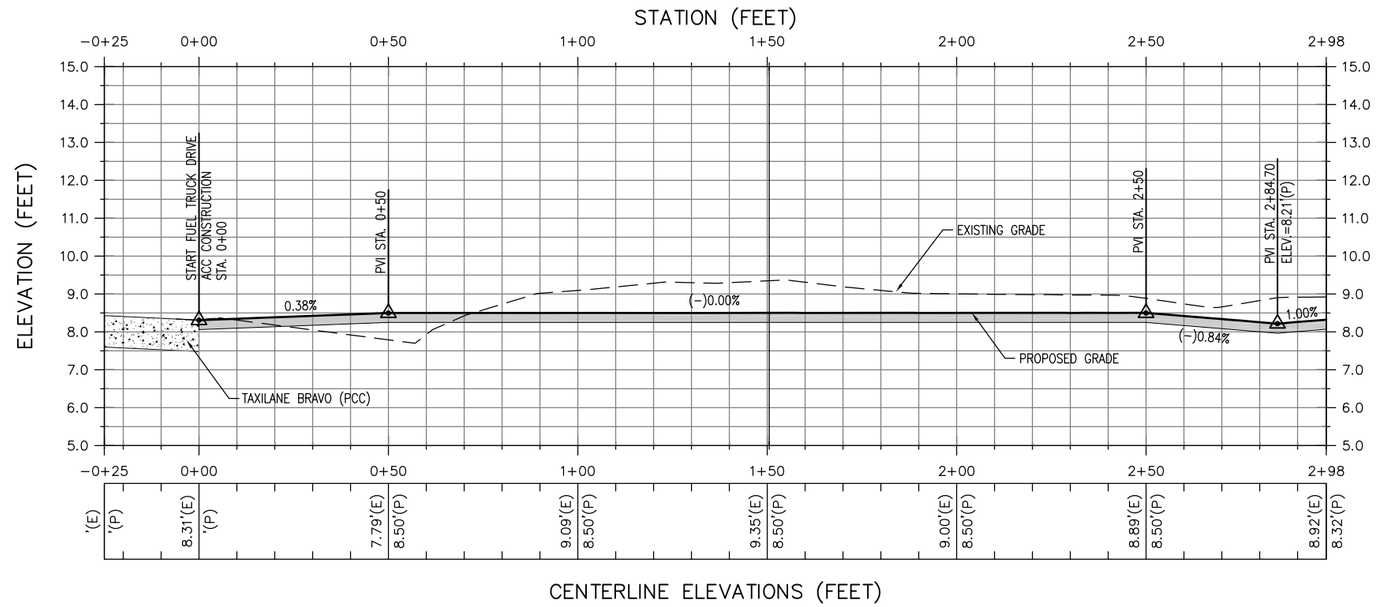

STATION (-)0+25 TO 2+98

HORIZONTAL SCALE - 1"=20'
VERTICAL SCALE - 1"=2'

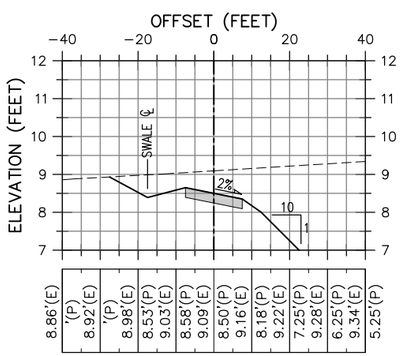

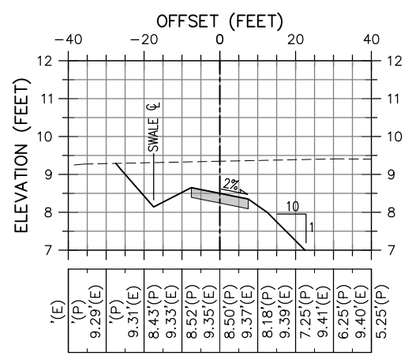

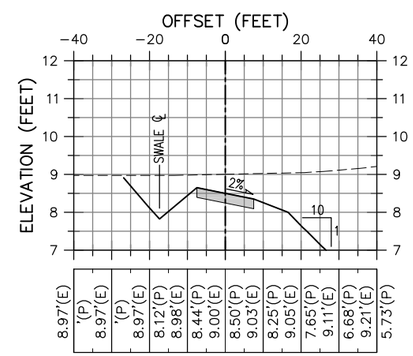

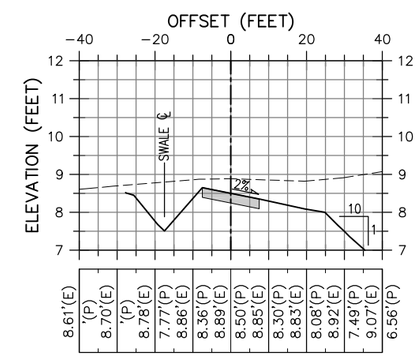

GRAPHIC SCALE

1"=20' 0' 20' 40' 60' 80' 100'
1"=2' 0' 2' 4' 6' 7' 8'

SYM	DESCRIPTION	DATE	APPR
---	---	---	---

SEAL

A/E INFO

APPROVED

FOR COMMANDER NAVFAC / B.L.T.L.

ACTIVITY --

SATISFACTORY TO DATE --

DES JWF DRW JWF CHK JWH

PROJECT MANAGER LOVE

IPT TECH. BRANCH HEAD --

CHIEF ENG/ARCH (CORE) FRANK

DEPARTMENT OF THE NAVY
NAVAL FACILITIES ENGINEERING COMMAND
IPT SOUTH ATLANTIC
NAVAL FACILITIES ENGINEERING COMMAND SOUTHEAST
NAVAL AIR STATION JACKSONVILLE
NAVAL AIR STATION JACKSONVILLE, FLORIDA
MH-60 APRON AND REPAIRS
FUEL TRUCK DRIVE PROFILE AND CROSS SECTIONS

SCALE: H:1"=20' V:1"=2'

EPROJECT NO.: 1291637

CONSTR. CONTR. NO. N69450-XX-C-XXXX

NAVFAC DRAWING NO. 15091999

SHEET 25 OF 44

C702

DRAWFORM REVISION: 7 AUGUST 2009

FILE NAME: F:\CBL\Project_Files\FLORIDA\MS JACKSONVILLE FL\H(N00207)664-MH-60 APRON AND REPAIR-1291637\Working Technical Files\Drawings\Sheet702 FUEL TRUCK DRIVE PROFILE AND CROSS SECTIONS.dwg LAYOUT NAME: C702 FUEL TRUCK DRIVE PROFILE AND CROSS SECTIONS PLOTTED: Monday, December 15, 2014 - 1:24pm USER: jeffrey.w.frank

SHEET FORMAT IS 22" X 34" - IF PRINTED SHEET IS NOT 22" X 34" THEN IT IS NOT TO SCALE

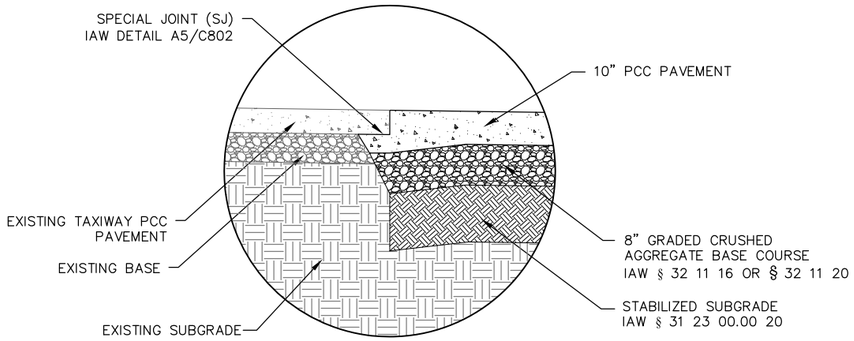

C1 / C800 TAXIWAY BRAVO TO PCC APRON SECTION

NOT TO SCALE

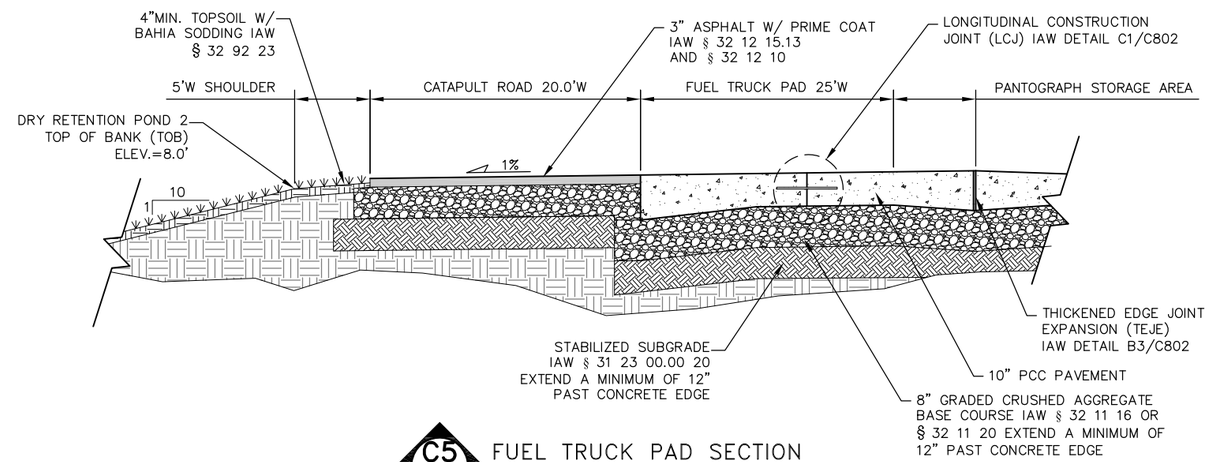

C5 / C800 FUEL TRUCK PAD SECTION

NOT TO SCALE

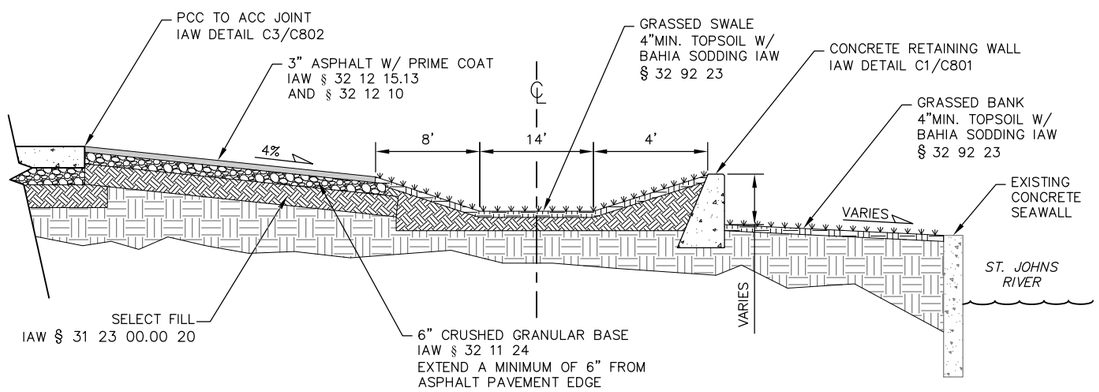

B1 / C800 APRON SHOULDER SECTION

NOT TO SCALE

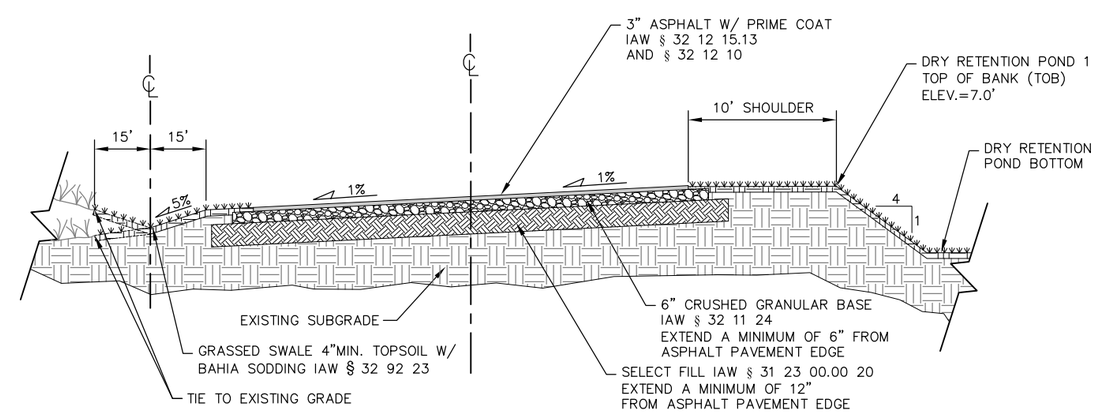

B5 / C800 CATAPULT ROAD SECTION

NOT TO SCALE

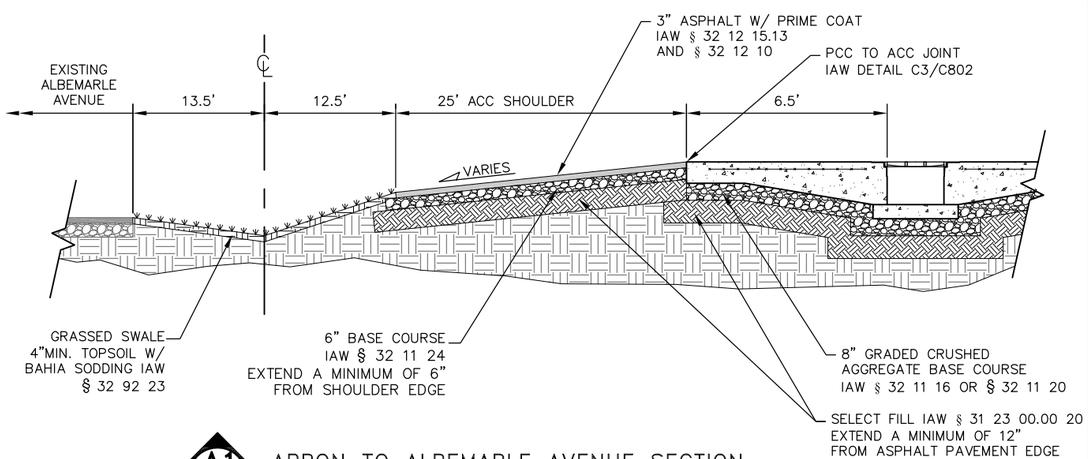

A1 / C800 APRON TO ALBEMARLE AVENUE SECTION

NOT TO SCALE

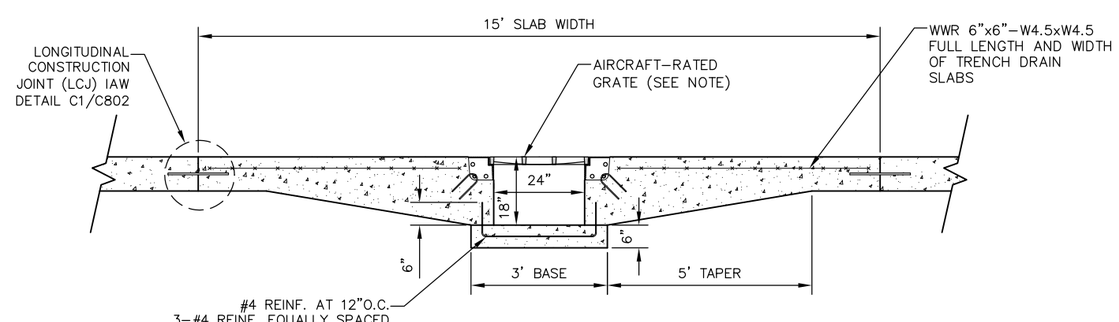

NOTE:
GRATE AND FRAME IS REQUIRED TO BE DESIGNED SPECIFICALLY FOR AIRPORT USE. THE COMPOSITE SYSTEM SHALL BE CAPABLE OF WITHSTANDING A 100,000LB LOAD PER THE REQUIREMENTS OF FAA AC 150/5370-6D. MINIMUM GRATE OPENING AREA OF 0.9SF/LINEAR FOOT IS REQUIRED.

A5 / C800 TRENCH DRAIN SECTION

NOT TO SCALE

SYM	DESCRIPTION	DATE	APPR
---	---	---	---

SEAL

A/E INFO

APPROVED

FOR COMMANDER NAVFAC / B.L.T.L.

ACTIVITY

--

SATISFACTORY TO DATE --

DES JWF | DRW JWF | CHK JWH

PROJECT MANAGER LOVE

IPT TECH. BRANCH HEAD --

CHIEF ENG/ARCH (CORE) FRANK

DEPARTMENT OF THE NAVY
NAVAL FACILITIES ENGINEERING COMMAND
IPT SOUTH ATLANTIC
NAVAL AIR STATION JACKSONVILLE

NAVAL FACILITIES ENGINEERING COMMAND SOUTHEAST
NAVAL AIR STATION JACKSONVILLE
JACKSONVILLE, FLORIDA

MH-60 APRON AND REPAIRS

TYPICAL SECTIONS

SCALE: NOT TO SCALE

EPROJECT NO.: 1291637

CONSTR. CONTR. NO. N69450-XX-C-XXXX

NAVFAC DRAWING NO. 15092000

SHEET 26 OF 44

C800

DRAWFORM REVISION: 7 AUGUST 2009

SHEET FORMAT IS 22" X 34". IF PRINTED SHEET IS NOT 22" X 34", THEN IT IS NOT TO SCALE

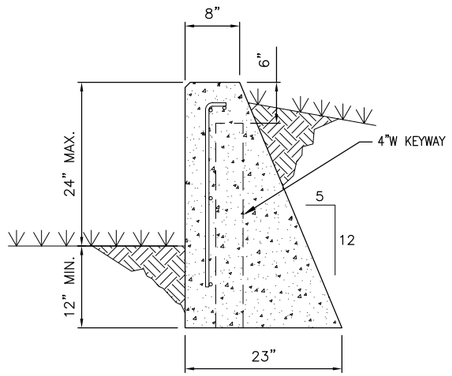

TYPICAL SECTION

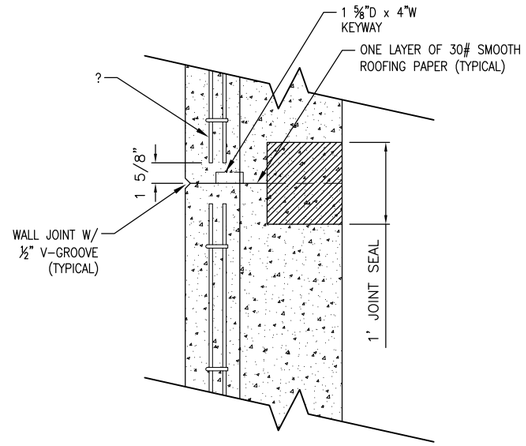

KEYWAY & WALL JOINT DETAIL

NOTES

1. THIS DETAIL IS TAKEN FROM THE FLORIDA DEPARTMENT OF TRANSPORTATION, DESIGN STANDARDS 2015 EDITION. REFER TO INDEX 6011 "GRAVITY WALL" FOR ADDITIONAL INFORMATION.

2. REFER TO SPECIFICATION 03 30 53 "MISCELLANEOUS CAST-IN-PLACE CONCRETE" FOR CONCRETE MIXTURE AND FINISHING REQUIREMENTS.

3. JOINT SEAL SHALL BE TWO LAYERS OF 30# SMOOTH ROOFING PAPER OR TYPE D5 GEOTEXTILE FABRIC. MOP ALL CONTACT SURFACES OF CONCRETE AND ROOFING PAPER OR GEOTEXTILE FABRIC WITH CUT-BACK ASPHALT. STOP ROOFING PAPER OR GEOTEXTILE FABRIC 6" BELOW TOP OF WALL.

C1 / C801 RETAINING WALL DETAIL

NOT TO SCALE

1. SET POSTS AND EXCAVATE A 4" x 4" TRENCH UP SLOPE ALONG THE LINE OF POSTS.

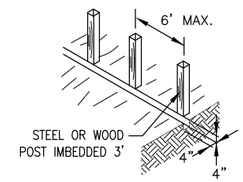

2. STAPLE WIRE FENCING TO THE POSTS.

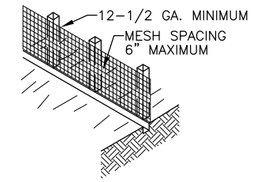

3. ATTACH THE FILTER BARRIER FABRIC TO THE WIRE FENCE AND EXTEND IT INTO THE TRENCH.

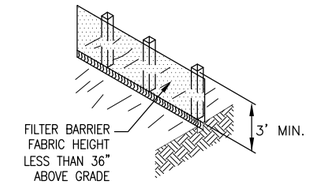

4. BACKFILL AND COMPACT THE EXCAVATED SOIL.

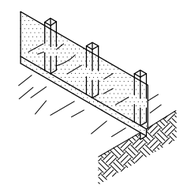

EXTENSION OF FABRIC AND WIRE INTO THE TRENCH

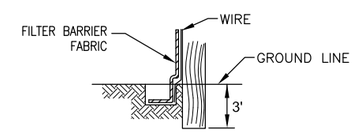

C5 / C801 TEMPORARY SILT FENCE DETAIL

NOT TO SCALE

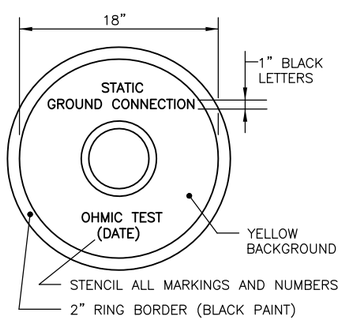

NOTE- STENCIL TEST DATE AND OHMS VALUES

STENCIL DETAIL

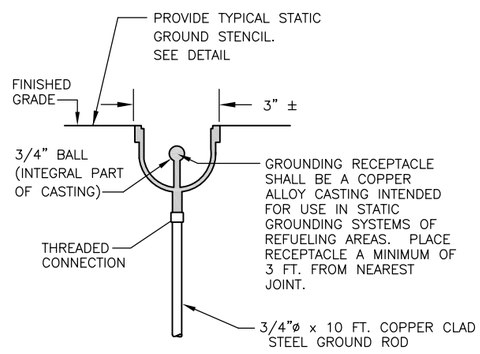

RECEPTACLE DETAIL

A1 / C801 STATIC GROUND POINT DETAIL

NOT TO SCALE

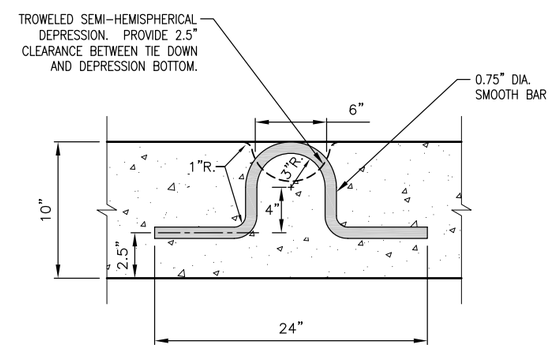

NOTES:

1. TIE DOWNS SHALL BE PLACED AT SLABS IDENTIFIED ON SHEETS C300 AND C301.

2. IN NO CASE SHALL THE TIE DOWN BE PLACED WITHIN 2-FEET OF A SLAB JOINT.

3. TIE DOWN BAR SHALL BE SMOOTH ASTM A615, GRADE 60, HOT-DIPPED GALVANIZED IN ACCORDANCE WITH ASTM A123.

4. PRE-FORMED CUPS MAY BE USED IN LIEU OF FORMING A TROWELLED DEPRESSION WITH THE APPROVAL OF THE ENGINEER OF RECORD.

A5 / C801 TIE DOWN DETAIL

NOT TO SCALE

SYM	DESCRIPTION	DATE	APPR
---	---	---	---

NAVFAC

SEAL

A/E INFO

APPROVED

FOR COMMANDER NAVFAC / B.L.T.L.

ACTIVITY

--

SATISFACTORY TO DATE --

DES JWF | DRW JWF | CHK JWH

PROJECT MANAGER LOVE

IPT TECH. BRANCH HEAD --

CHIEF ENG/ARCH (CORE) FRANK

DEPARTMENT OF THE NAVY
NAVAL FACILITIES ENGINEERING COMMAND
IPT SOUTH ATLANTIC

NAVAL FACILITIES ENGINEERING COMMAND SOUTHEAST
NAVAL AIR STATION JACKSONVILLE

NAVAL AIR STATION JACKSONVILLE, FLORIDA

MH-60 APRON AND REPAIRS

TYPICAL SECTIONS AND DETAILS

SCALE: NOT TO SCALE

EPROJECT NO.: 1291637

CONSTR. CONTR. NO. N69450-XX-C-XXXX

NAVFAC DRAWING NO. 15092001

SHEET 27 OF 44

C801

DRAWFORM REVISION: 7 AUGUST 2009

FILE NAME: P:\CBL\Project_Files\FLORIDA\MAS JACKSONVILLE FL\H\N00207\684-MH-60 APRON AND REPAIR-1291637\Working Technical Files\Drawings\Sheet801 TYPICAL SECTIONS AND DETAILS.dwg LAYOUT NAME: C801 TYPICAL SECTIONS AND DETAILS PLOTTED: Monday, December 15, 2014 - 1:25pm USER: jeffrey.w.frank

SHEET FORMAT IS 22" X 34". IF PRINTED SHEET IS NOT 22" X 34", THEN IT IS NOT TO SCALE

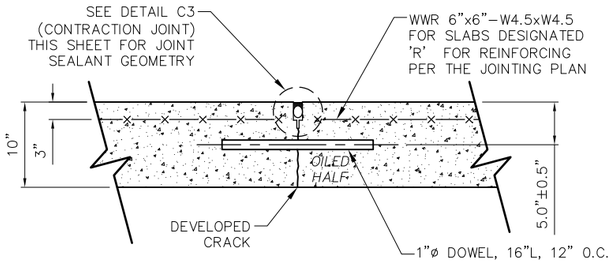

D1 / C802 TRANSVERSE CONTRACTION JOINT (TCJ)

NOT TO SCALE

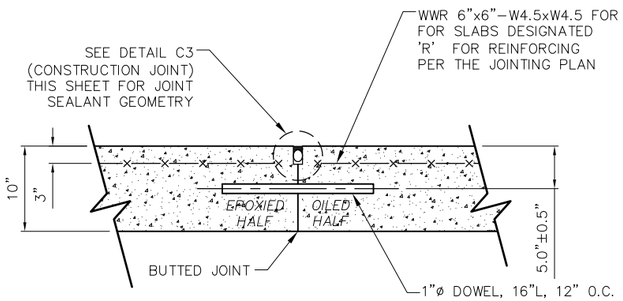

C1 / C802 LONGITUDINAL CONSTRUCTION JOINT (LCJ)

NOT TO SCALE

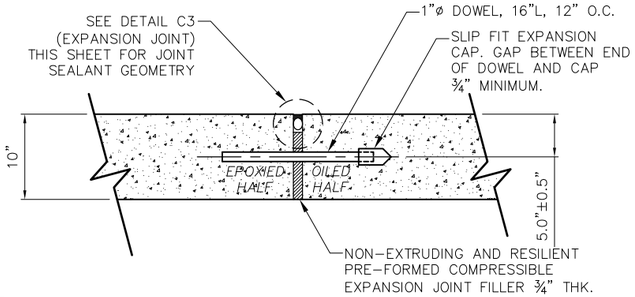

B1 / C802 TRANSVERSE CONSTRUCTION JOINT EXPANSION (TCJE)

NOT TO SCALE

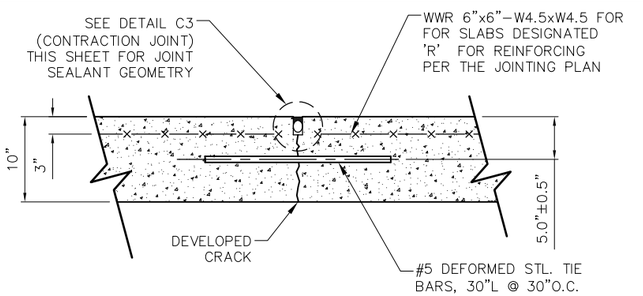

A1 / C802 TRANSVERSE CONTRACTION JOINT TIED (TCT)

NOT TO SCALE

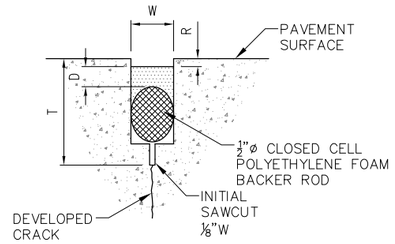

CONTRACTION JOINT

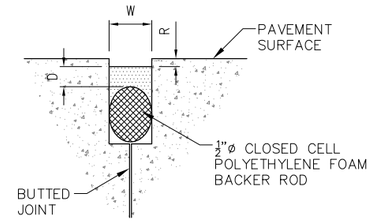

CONSTRUCTION JOINT

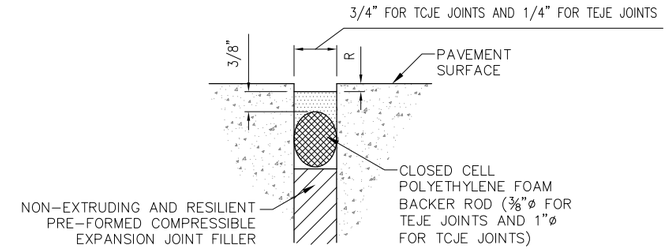

EXPANSION JOINT

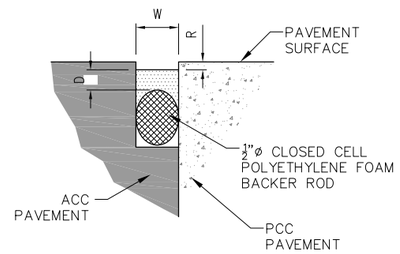

PCC TO ACC JOINT

DEFINITIONS

W ≡ WIDTH OF SEALANT RESERVOIR = ⅜"
D ≡ DEPTH OF SEALANT = ⅜"
(OR PER MANUFACTURER'S
RECOMMENDATION)
T ≡ DEPTH OF INITIAL SAWCUT = 2.50"
R ≡ DEPTH OF RECESS = ¼" ± 1/16"

C3 / C802 JOINT SEALANT DETAILS

NOT TO SCALE

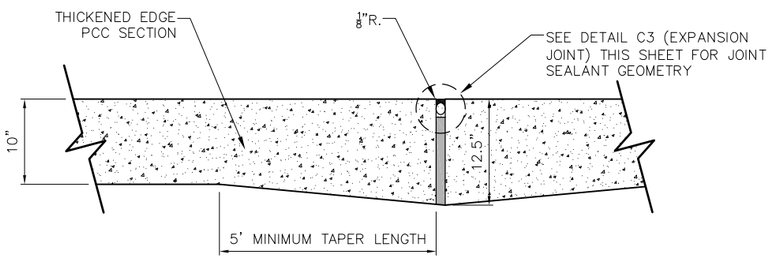

B3 / C802 THICKENED EDGE JOINT EXPANSION (TEJE)

NOT TO SCALE

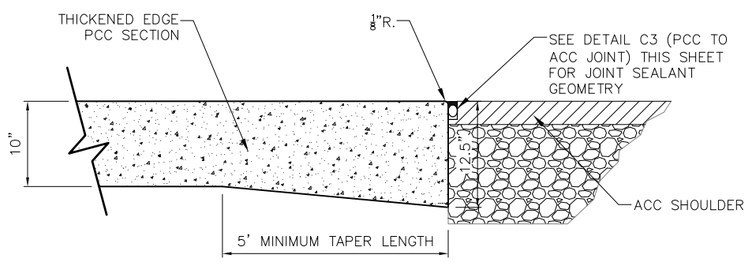

A3 / C802 THICKENED EDGE JOINT (TEJ)

NOT TO SCALE

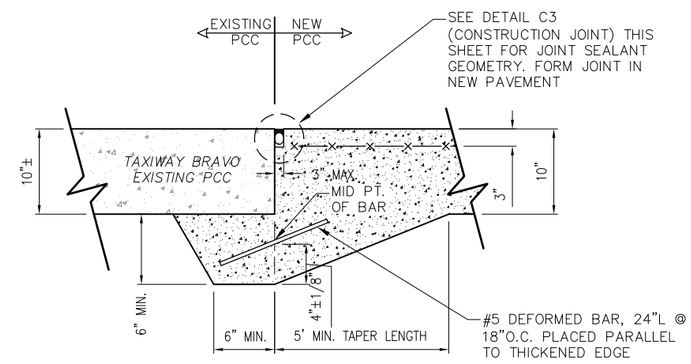

A5 / C802 SPECIAL JOINT (SJ)

NOT TO SCALE

NOTES:

1. TRANSVERSE CONSTRUCTION JOINTS SHALL BE INSTALLED AT A PLANNED TRANSVERSE JOINT, AT THE END OF EACH DAY'S PLACING OPERATIONS AND WHEN CONCRETE PLACEMENT IS INTERRUPTED. TRANSVERSE CONSTRUCTION JOINTS SHALL BE CONSTRUCTED BY PLACING CONCRETE BEYOND THE TRANSVERSE CONSTRUCTION JOINT LOCATION AND THEN SAW CUTTING FULL DEPTH AND REMOVING CONCRETE BACK TO THE TRANSVERSE CONSTRUCTION JOINT LOCATION. FOR THE LATTER CASE, DOWELS SHALL BE INSTALLED IN ACCORDANCE WITH DETAIL C1 AS SHOWN ON THIS SHEET.
2. FOR INSTALLATION OF DOWELS AND TIE BARS THE DRILLING METHOD SHALL BE CAPABLE OF MAINTAINING DRILL HOLES PARALLEL TO THE CONCRETE SURFACE AND NORMAL TO THE JOINT LINE WITHIN ¼"± AT THE END OF THE DOWEL AND TIE BAR. DRILL HOLES SHALL BE ACCURATELY LAID OUT SUCH THAT THE MAXIMUM DEVIATION DOES NOT EXCEED 1" HORIZONTALLY. DRILL HOLE DIAMETER SHALL BE APPROXIMATELY ⅛" LARGER THAN DOWEL AND TIE BAR DIAMETERS. A MINIMUM OF SEVEN (7) DAYS CURE TIME OR A COMPRESSIVE STRENGTH OF 2,500 PSI IS REQUIRED FOR DRILLING OF NEW CONCRETE.
3. USE TYPE 'LCJ' JOINT FOR ALL CONSTRUCTION JOINTS PLACED DUE TO CONTRACTOR'S POURING SEQUENCE.
4. IF CONTRACTOR PLACES A TYPE 'LCJ' JOINT AT A TRANSVERSE JOINT LOCATION DUE TO POURING SEQUENCE, LEAVE OUT ONE DOWEL FROM EACH END AS NOT TO INTERFERE WITH LONGITUDINAL DOWELS.
5. DOWELS IN HEADERS SHALL BE DRILLED AND EPOXIED OR MAY BE CAST–IN–PLACE USING A DOWEL CAGE AND SPLIT FORM. NO OTHER DOWEL INSTALLATION DEVICES ARE ACCEPTABLE.
6. ALL JOINTS AROUND EXISTING AND PROPOSED STRUCTURES SHALL BE TYPE 'TEJE'.
7. WELDED WIRE REINFORCEMENT (WWR) SHALL REMAIN A MINIMUM OF 3" CLEAR FROM ALL JOINTS.

SYM	DESCRIPTION	DATE	APPR
---	---	---	---

NAVFAC

SEAL

A/E INFO

APPROVED

FOR COMMANDER NAVFAC / B.L.T.L.

ACTIVITY --

SATISFACTORY TO DATE --

DES JWF | DRW JWF | CHK JWH

PROJECT MANAGER LOVE

IPT TECH. BRANCH HEAD --

CHIEF ENG/ARCH (CORE) FRANK

DEPARTMENT OF THE NAVY
NAVAL FACILITIES ENGINEERING COMMAND
IPT SOUTH ATLANTIC

NAVAL FACILITIES ENGINEERING COMMAND SOUTHEAST
NAVAL AIR STATION JACKSONVILLE

NAVAL AIR STATION JACKSONVILLE, FLORIDA

MH-60 APRON AND REPAIRS

PCC JOINT DETAILS

SCALE: NOT TO SCALE

EPROJECT NO.: 1291637

CONSTR. CONTR. NO. N69450–XX–C–XXXX

NAVFAC DRAWING NO. 15092002

SHEET 28 OF 44

C802

DRAWFORM REVISION: 7 AUGUST 2009

SHEET FORMAT IS 22" X 34". IF PRINTED SHEET IS NOT 22" X 34" THEN IT IS NOT TO SCALE

FILE NAME: P:\CBL\Project_Files\FLORIDA\MAS JACKSONVILLE FL(H)\N00207\864-MH-60 APRON AND REPAIR-1291637\Working Technical Files\Drawings\Sheet802 PCC JOINT DETAILS.dwg LAYOUT NAME: C802 PCC JOINT DETAILS PLOTTED: Monday, December 15, 2014 - 1:26pm USER: jeffrey.w.frank

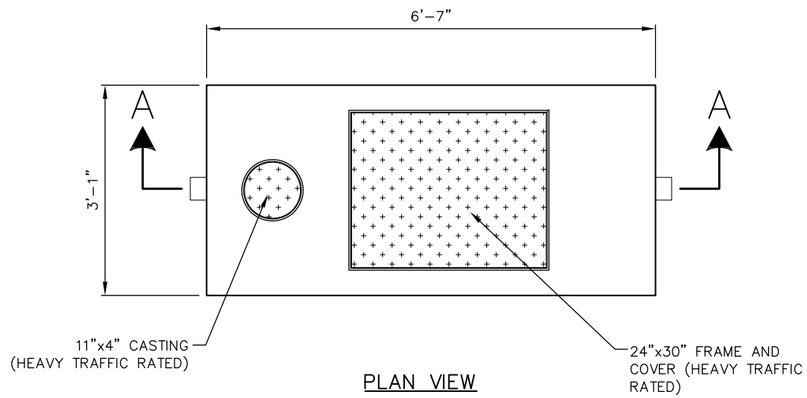

PLAN VIEW

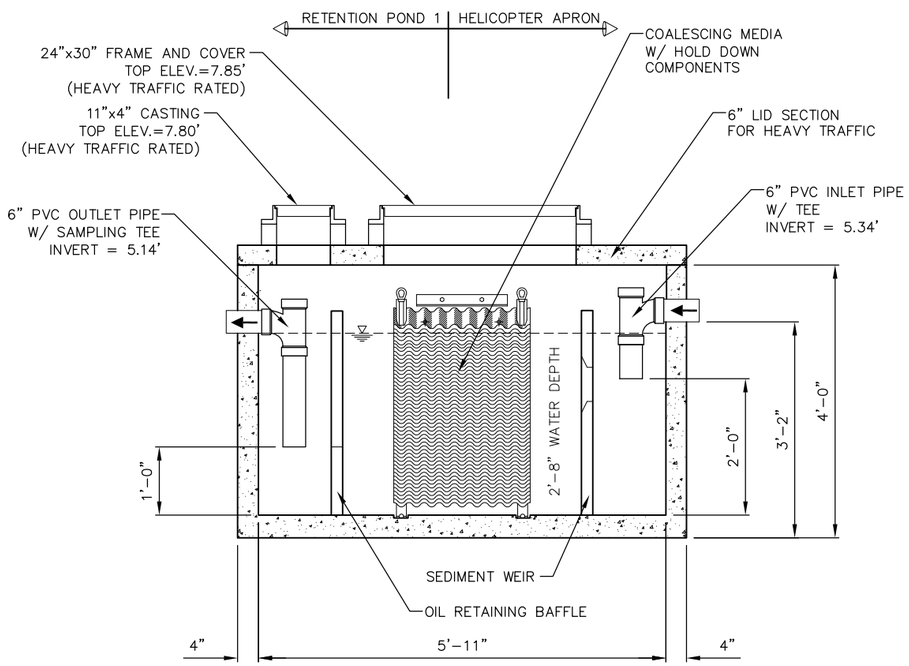

SECTION AA

OPERATING REQUIREMENTS

STATIC WATER DEPTH = 2'-8"
MINIMUM DESIGN FLOW RATE = 47GPM
EFFLUENT QUALITY = 10 PPM
100% COLLECTED SIZE = 60 MICRON

NOTES

1) PRIOR TO STARTUP THE SYSTEM SHALL BE FILLED WITH CLEAN WATER TO BOTTOM OF OUTLET PIPE.

2) UPON THE COMPLETION OF ALL CONSTRUCTION ACTIVITIES THE GOVERNMENT WILL CONDUCT REGULAR INSPECTIONS, CLEANING & MAINTENANCE OF THIS SYSTEM.

A1 C803 COALESCING OIL/WATER SEPARATOR-47 GPM DETAIL

NOT TO SCALE

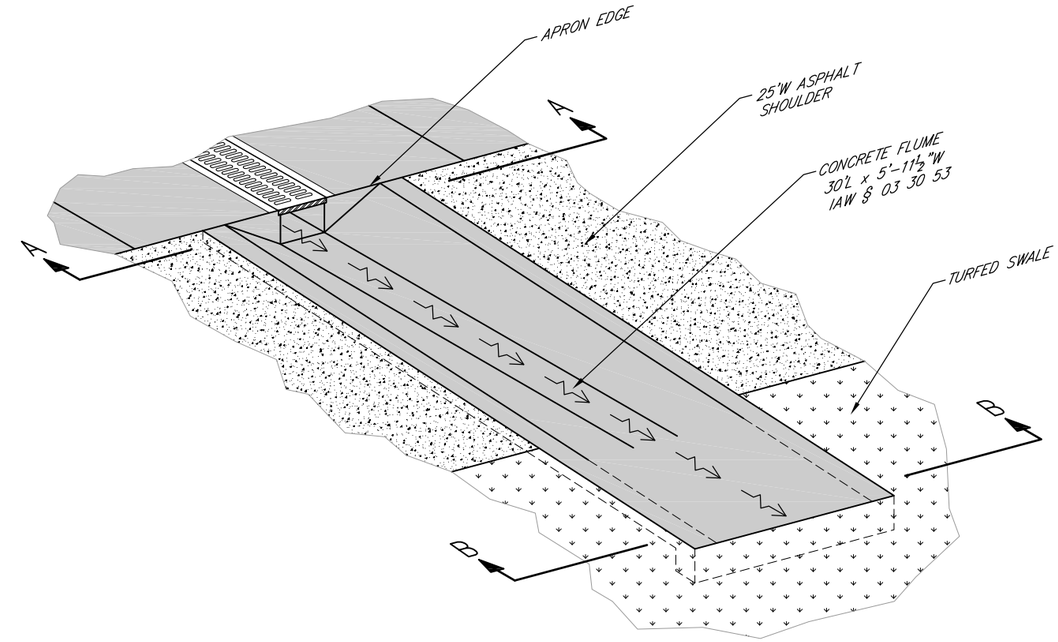

ISOMETRIC VIEW

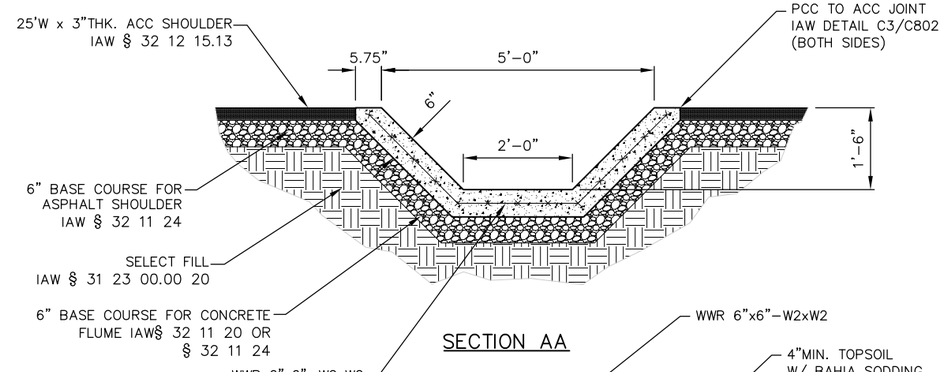

SECTION AA

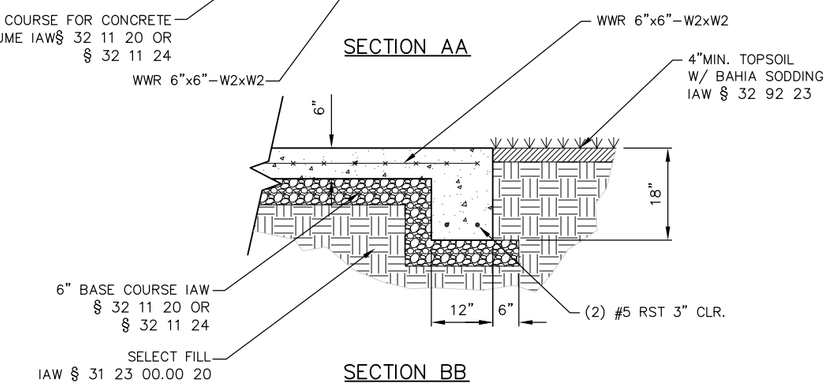

SECTION BB

A5 C803 CONCRETE FLUME DETAIL

NOT TO SCALE

SYM	DESCRIPTION	DATE	APPR
---	---	---	---
---	---	---	---
---	---	---	---
---	---	---	---
---	---	---	---
---	---	---	---
---	---	---	---

NAVFAC

SEAL

A/E INFO

APPROVED

FOR COMMANDER NAVFAC / B.L.T.L

ACTIVITY

--

SATISFACTORY TO DATE --

DES JWF DRW JWF CHK JWH

PROJECT MANAGER LOVE

IPT TECH. BRANCH HEAD --

CHIEF ENG/ARCH (CORE) FRANK

DEPARTMENT OF THE NAVY
NAVAL FACILITIES ENGINEERING COMMAND
IPT SOUTH ATLANTIC
NAVAL FACILITIES ENGINEERING COMMAND SOUTHEAST
NAVAL AIR STATION JACKSONVILLE
NAVAL AIR STATION JACKSONVILLE, FLORIDA
MH-60 APRON AND REPAIRS
DRAINAGE DETAILS

SCALE: NOT TO SCALE

EPROJECT NO.: 1291637

CONSTR. CONTR. NO. N69450-XX-C-XXXX

NAVFAC DRAWING NO. 15092003

SHEET 29 OF 44

C803

DRAWFORM REVISION: 7 AUGUST 2009

SHEET FORMAT IS 22" X 34". IF PRINTED SHEET IS NOT 22" X 34", THEN IT IS NOT TO SCALE

FILE NAME: P:\CBL\Project_Files\FLORIDA\MS JACKSONVILLE FL(N00207)\664-MH-60 APRON AND REPAIR-1291637\Working Technical Files\Drawings\Sheet803 DRAINAGE DETAILS.dwg LAYOUT NAME: C803 DRAINAGE DETAILS PLOTTED: Monday, December 15, 2014 - 1:26pm USER: jeffrey.w.frank

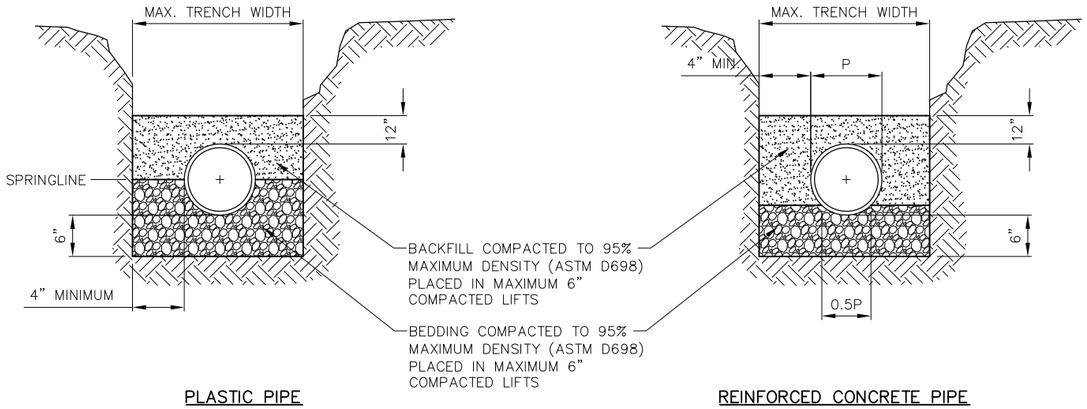

NOTES:

1) BELL HOLE SHALL BE DUG TO PERMIT THE ENTIRE STRAIGHT BARREL OF THE PIPE TO REST ON THE UNDISTURBED TRENCH BOTTOM. BOULDERS OR LOOSE ROCKS LARGER THAN 1" WILL NOT BE PERMITTED IN BACKFILL UP TO 1 FOOT ABOVE THE TOP OF PIPE.

2) SEE SPECIFICATION SECTION 31 23 00.00 20

D1 / C804 DRAINAGE PIPE TRENCH DETAIL

NOT TO SCALE

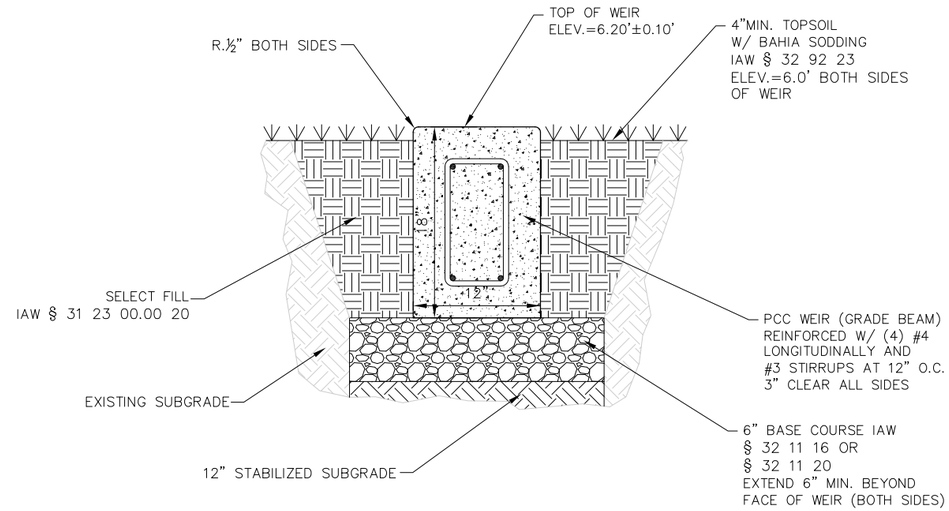

D5 / C804 PCC OVERFLOW WEIR DETAIL

NOT TO SCALE

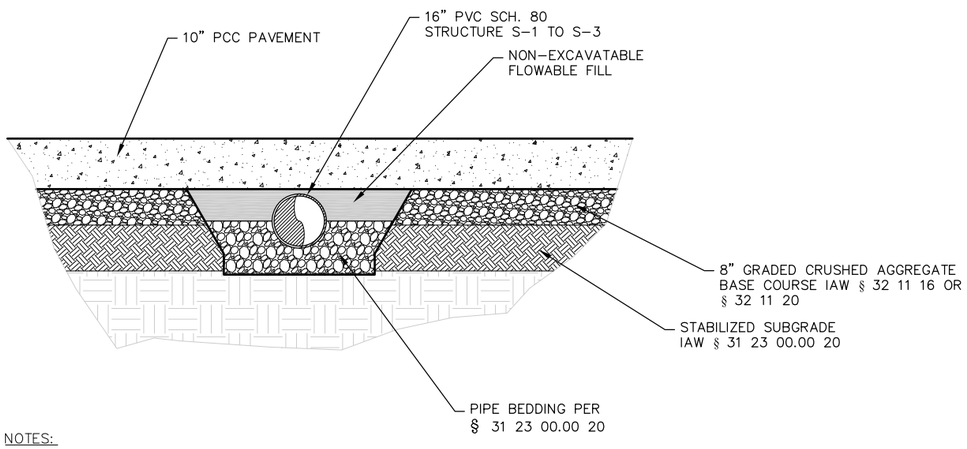

NOTES:

1. NON-EXCAVATABLE FLOWABLE FILL SHALL CONTAIN 75-150 LB/YD3 OF CEMENT, 150-600 LB/YD3 OF FLY ASH, 5-15% AIR, HAVE A UNIT WEIGHT OF 100-125 LB/YD3, AND A MINIMUM 28-DAY COMPRESSIVE STRENGTH OF 125 PSI. FINE AGGREGATE SHALL BE PROPORTIONED TO YIELD 1 YD3. WATER QUANTITY SHALL BE THAT REQUIRED TO PRODUCE A CONSISTENCE THAT WILL RESULT IN A FLOWABLE SELF-LEVELING PRODUCT AT TIME OF PLACEMENT. VIBRATION WILL NOT BE PERMITTED DURING PLACEMENT. FLOWABLE FILL SHALL NOT BE PLACED DURING INCLEMENT WEATHER OR WHEN INCLEMENT WEATHER IS IMMINENT (WITHIN 24-HOURS OF PLACEMENT).

2. NON-EXCAVATABLE FLOWABLE FILL SHALL BE PLACED FROM THE PIPE SPRINGLINE AND UP TO THE BASE OF THE PCC PAVEMENT. FLOWABLE FILL IS ONLY REQUIRED TO BE PLACED OVER SECTION OF PIPE THAT RESIDES BENEATH PCC PAVEMENT.

3. PRIOR TO BACKFILLING THE TRENCH THE NON-EXCAVATABLE FLOWABLE FILL SHALL BE ALLOWED TO CURE IN-PLACE FOR A MINIMUM OF 24-HOURS.

A1 / C804 SPECIAL BACKFILL DETAIL PIPE LINK S-1 TO S-3

NOT TO SCALE

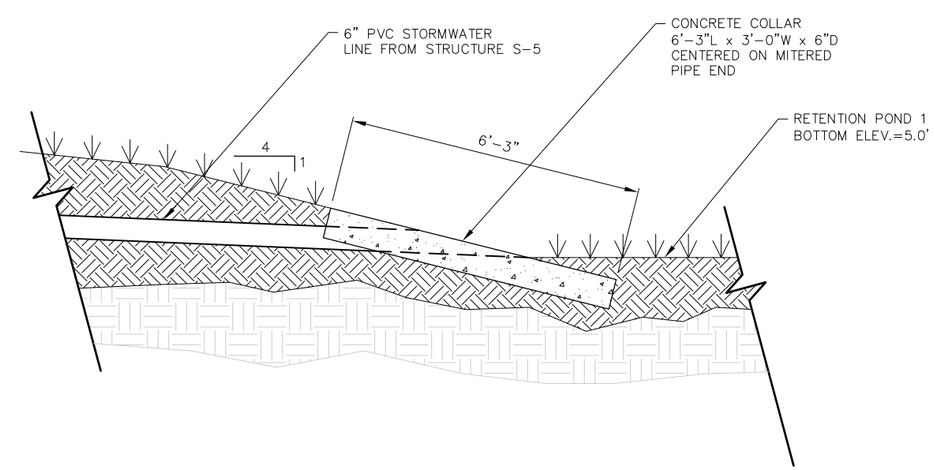

A5 / C804 CONCRETE COLLAR (STRUCTURE S-6)

NOT TO SCALE

SYM	DESCRIPTION	DATE	APPR
---	---	---	---

NAVFAC

SEAL

A/E INFO

APPROVED

FOR COMMANDER NAVFAC / B.L.T.L.

ACTIVITY: --

SATISFACTORY TO DATE: --

DES JWF | DRW JWF | CHK JWH

PROJECT MANAGER: LOVE

IPT TECH. BRANCH HEAD: --

CHIEF ENG/ARCH (CORE): FRANK

DEPARTMENT OF THE NAVY
NAVAL FACILITIES ENGINEERING COMMAND SOUTHEAST
IPT SOUTH ATLANTIC
NAVAL FACILITIES ENGINEERING COMMAND
NAVAL AIR STATION JACKSONVILLE
NAVAL AIR STATION JACKSONVILLE, FLORIDA

MH-60 APRON AND REPAIRS

DRAINAGE DETAILS

SCALE: NOT TO SCALE

EPROJECT NO.: 1291637

CONSTR. CONTR. NO. N69450-XX-C-XXXX

NAVFAC DRAWING NO. 15092004

SHEET 30 OF 44

C804

DRAWFORM REVISION: 7 AUGUST 2009

FILE NAME: P:\CBL\Project_Files\FLORIDA\MAS JACKSONVILLE FLH\N00207\664-MH-60 APRON AND REPAIR-1291637\Working Technical Files\Drawings\Sheet C804 DRAINAGE DETAILS.dwg LAYOUT NAME: C804 DRAINAGE DETAILS PLOTTED: Monday, December 15, 2014 - 1:27pm USER: jeffrey.a.frank

SHEET FORMAT IS 22" x 34" - IF PRINTED SHEET IS NOT 22" x 34" THEN IT IS NOT TO SCALE

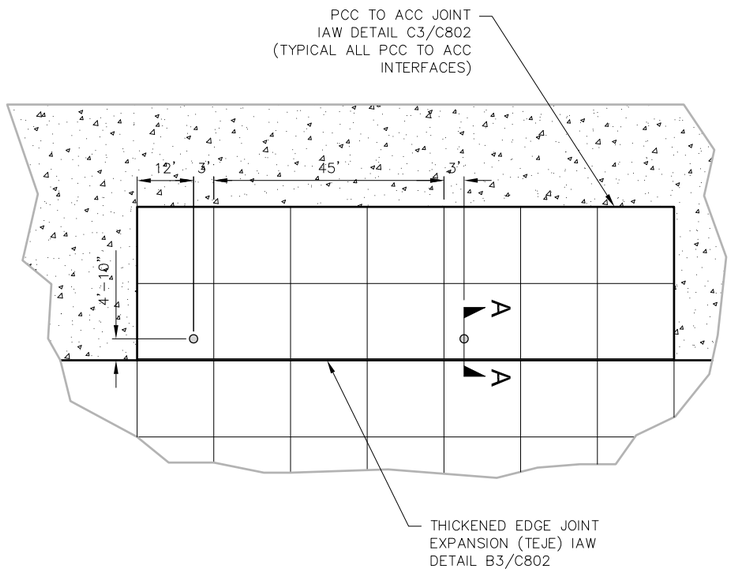

PLAN VIEW

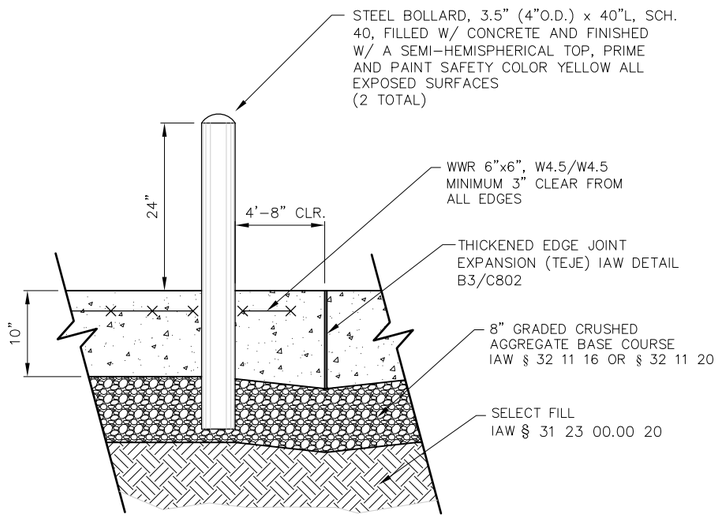

SECTION A-A

A1 C805 PANTOGRAPH PROTECTIVE BOLLARDS DETAIL

NOT TO SCALE

MONITORING WELL RELOCATION, DEMOLITION, AND ADJUSTMENT TABLE

MONITORING WELL ID	EXISTING LOCATION NORTHING	EXISTING LOCATION EASTING	PROPOSED LOCATION NORTHING	PROPOSED LOCATION EASTING	TOP ELEVATION	NOTES
JAX25-MW01	2143428.37	445757.32	-----	-----	7.7'	WELL TO REMAIN IN PLACE, REPLACE CONCRETE COLLAR
JAX25-MW02	2143500.09	445743.05	2143508.93	445744.69	8.17'	DEMOLISH TOP SECTION & PROPERLY ABANDON, INSTALL NEW WELL
JAX25-MW03	2143620.41	445749.05	2143628.97	445759.77	8.68'	DEMOLISH TOP SECTION & PROPERLY ABANDON, INSTALL NEW WELL
JAX25-MW04	2143620.64	445744.83	2143628.93	445744.77	8.68'	DEMOLISH TOP SECTION & PROPERLY ABANDON, INSTALL NEW WELL
JAX25-MW05	2143431.61	446105.87	-----	-----	6.80'	RAISE HANDHOLE COVER FROM 6.65' TO 6.80', ENCASE IN CONCRETE COLLAR
JAX25-MW07	2143417.53	445915.16	-----	-----	-----	WELL OUTSIDE OF CONSTRUCTION LIMITS, NO WORK REQUIRED
JAX25-MW09	2143478.79	445866.51	2143493.85	445864.68	7.95'	DEMOLISH TOP SECTION & PROPERLY ABANDON, INSTALL NEW WELL
JAX25-MW11	2143477.52	445734.33	2143493.92	445729.75	8.12'	DEMOLISH TOP SECTION & PROPERLY ABANDON, INSTALL NEW WELL
JAX25-MW12	2143566.49	445838.71	-----	-----	8.34'	RAISE HANDHOLE COVER FROM 7.91' TO 8.34'
JAX25-MW13	2143743.14	445746.59	-----	-----	8.63'	RAISE HANDHOLE COVER FROM 8.51' TO 8.63'
JAX25-MW14	2143675.38	445934.64	-----	-----	8.87	RAISE HANDHOLE COVER FROM 7.91' TO 8.87'
JAX25-MW15	2143606.32	445992.68	2143598.76	445999.79	8.41'	DEMOLISH TOP SECTION & PROPERLY ABANDON, INSTALL NEW WELL
JAX25-MW16I	2142451.36	445866.39	-----	-----	7.51'	RAISE HANDHOLE COVER FROM 7.24' TO 7.51', ENCASE IN CONCRETE COLLAR
JAX-PCA25-TF-MW03	2143447.63	445803.78	-----	-----	7.51'	RAISE HANDHOLE COVER FROM 7.46' TO 7.51', ENCASE IN CONCRETE COLLAR
JAX-PCA25-TF-MW04	2143742.95	445716.83	-----	-----	8.66'	LOWER HANDHOLE COVER FROM 8.74' TO 8.66', ENCASE IN CONCRETE COLLAR
JAX-PCA25-TF-MW11	2143413.73	446019.55	-----	-----	-----	WELL OUTSIDE OF CONSTRUCTION LIMITS, NO WORK REQUIRED
JAX25-MW48	2143444.04	445896.43	-----	-----	-----	DEMOLISH TOP SECTION & PROPERLY ABANDON
UNK-1	2143818.58	445860.77	-----	-----	-----	DEMOLISH TOP SECTION & PROPERLY ABANDON
UNK-2	2143713.89	445853.94	-----	-----	-----	DEMOLISH TOP SECTION & PROPERLY ABANDON
UNK-3	2143717.87	446035.65	-----	-----	-----	DEMOLISH TOP SECTION & PROPERLY ABANDON
UNK-4	2144003.27	445882.45	-----	-----	-----	DEMOLISH TOP SECTION & PROPERLY ABANDON
UNK-5	2143870.30	445980.60	-----	-----	-----	DEMOLISH TOP SECTION & PROPERLY ABANDON
UNK-6	2144063.06	445729.63	-----	-----	-----	DEMOLISH TOP SECTION & PROPERLY ABANDON

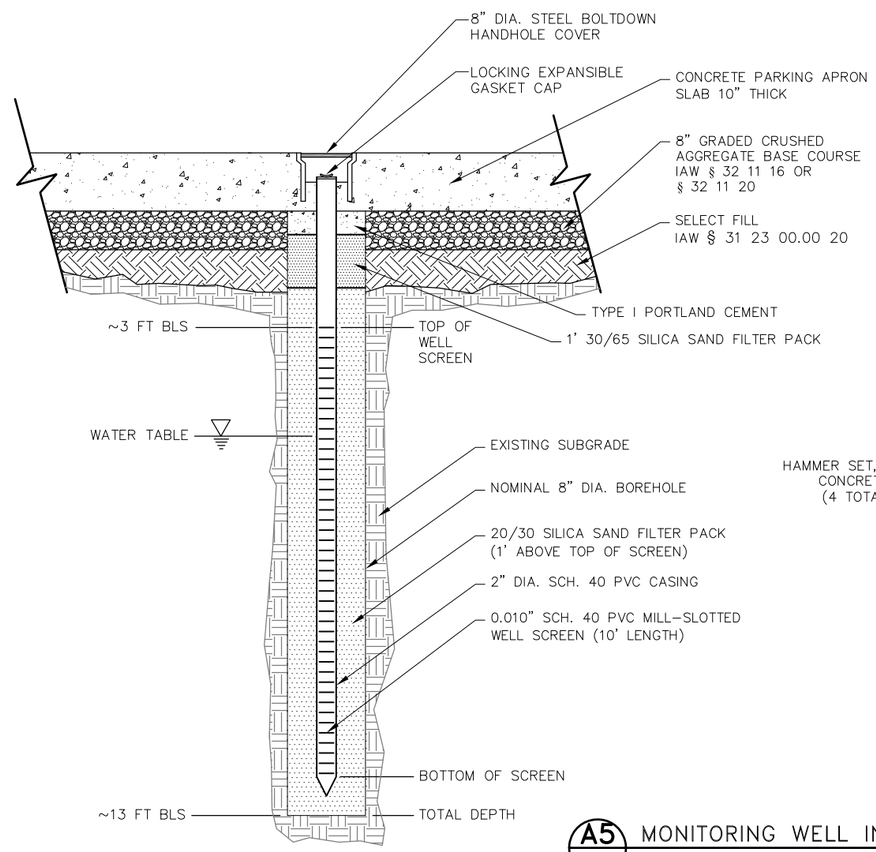

NOTES:

1) PRIOR TO ABANDONMENT OF EXISTING WELLS AND INSTALLATION OF NEW WELLS THE CONTRACTOR SHALL MEET WITH THE NAS JACKSONVILLE ENVIRONMENTAL ENGINEER TO CONFIRM WELLS TO BE ABANDONED AND THE LOCATION OF NEW WELLS.

2) NEWLY INSTALLED WELLS AND COLLARS SHALL INCLUDE AN IDENTIFICATION TAG AFFIXED ADJACENT TO THE HANDHOLE COVER. OVERALL DIMENSIONS OF THE TAG APPROXIMATELY 2½"W x 3⅛"H. THE TAG SHALL CONTAIN THE INFORMATION SHOWN IN THE DETAIL BELOW AND BE FASTENED TO THE CONCRETE COLLAR W/ FOUR (4), 2"L HAMMER SET NAIL DRIVE CONCRETE ANCHORS.

3) FOR NEWLY INSTALLED WELLS THE CONTRACTOR SHALL PROVIDE THE NORTHING, EASTING, AND ELEVATION OF THE HANDHOLE COVER TO THE NAS JACKSONVILLE ENVIRONMENTAL ENGINEER.

4) CONCRETE COLLARS SHALL MEASURE 24"x24"x6" THK. AND BE CONSTRUCTED SUCH THAT THE SURFACE IS FLUSH WITH THE PROPOSED GRADE.

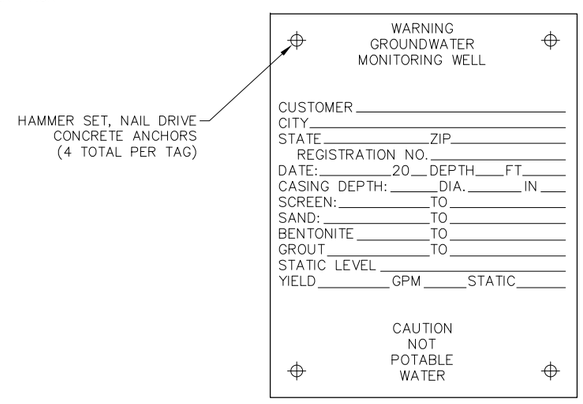

IDENTIFICATION TAG DETAIL

A5 C805 MONITORING WELL INSTALLATION DETAIL

NOT TO SCALE

SYM	DESCRIPTION	DATE	APPR
---	---	---	---
---	---	---	---
---	---	---	---
---	---	---	---
---	---	---	---
---	---	---	---
---	---	---	---
---	---	---	---

NAVFAC

SEAL

A/E INFO

APPROVED

FOR COMMANDER NAVFAC / B.L.T.L.

ACTIVITY --

SATISFACTORY TO DATE --

DES JWF DRW JWF CHK JWH

PROJECT MANAGER LOVE

IPT TECH. BRANCH HEAD --

CHIEF ENG/ARCH (CORE) FRANK

DEPARTMENT OF THE NAVY
NAVAL FACILITIES ENGINEERING COMMAND
IPT SOUTH ATLANTIC

NAVAL FACILITIES ENGINEERING COMMAND SOUTHEAST
NAVAL AIR STATION JACKSONVILLE

NAVAL AIR STATION JACKSONVILLE JACKSONVILLE, FLORIDA

MH-60 APRON AND REPAIRS

SITE DETAILS

SCALE: NOT TO SCALE

EPROJECT NO.: 1291637

CONSTR. CONTR. NO. N69450-XX-C-XXXX

NAVFAC DRAWING NO. 15092005

SHEET 31 OF 44

C805

FILE NAME: P:\CBL\Project_Files\FLORIDA\NAS JACKSONVILLE FL(H)\N00207\K64-MH-60 APRON AND REPAIR-1291637\Working Technical Files\Drawings\Sheet805 SITE DETAILS.dwg LAYOUT NAME: C805 SITE DETAILS PLOTTED: Thursday, December 18, 2014 - 10:21am USER: jeffrey.w.frank

DRAWFORM REVISION: 7 AUGUST 2009

SHEET FORMAT IS 22" X 34" - IF PRINTED SHEET IS NOT 22" X 34" THEN IT IS NOT TO SCALE

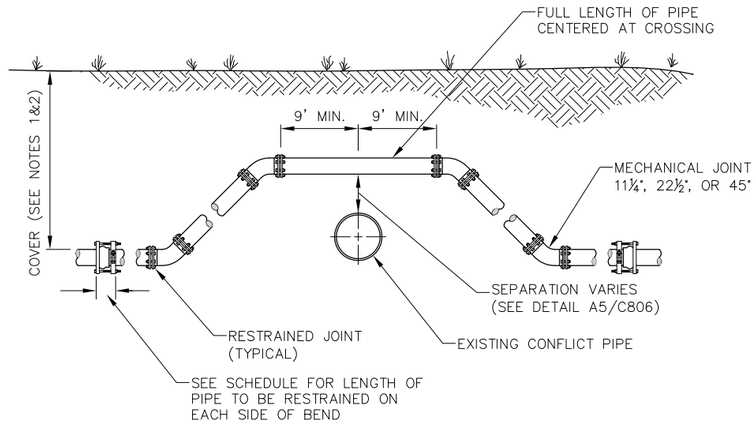

TYPE 'A' CROSSING

NOT TO SCALE

PVC PIPE RESTRAINT JOINT SCHEDULE

LENGTH TO BE RESTRAINED (FEET)

NOMINAL PIPE SIZE (INCHES)	HORIZONTAL BENDS				VERTICAL OFFSETS		
	90	45	22.5	11.25	Lu	Li	L
4	20	8	4	2	20	3	50
6	28	10	5	2	28	4	70
8	36	14	6	3	36	5	90

REDUCERS

SIZE	LENGTH (FEET)
6x4	35
8x6	35
8x4	65

TEES

RUN SIZE	BRANCH SIZE	LENGTH (FEET)
4	4	FITTING ONLY
6	6	10
6	4<LESS	FITTING ONLY
8	8	30
8	6<LESS	FITTING ONLY

NOTES:

1) PIPE RESTRAINT ASSUMPTIONS: PVC PIPE, SAFETY FACTOR = 1.5, TEST PRESSURE=150PSI, DEPTH OF COVER=30 INCHES.

2) VERTICAL OFFSETS ARE APPROXIMATELY 3 FEET OF COVER ON TOP AND APPROXIMATELY 8 FEET COVER ON BOTTOM. Lu IS THE RESTRAINED LENGTH FOR THE TOP LEVEL. Li IS THE RESTRAINED LENGTH FOR THE BOTTOM LEVEL.

3) TEES: TOTAL LENGTH BETWEEN FIRST JOINTS OR RESTRAINED LENGTH ON EITHER SIDE OF THE TEE (RUN) SHALL BE A TOTAL DISTANCE OF 30 FEET (MIN.)

4) THE INSTALLATION OF BELL HARNESS RESTRAINTS AT PVC JOINTS SHALL BE COMPLETED PER THE MANUFACTURER'S RECOMMENDATIONS.

D1 / C806 PIPE CROSSING CONFLICTS DETAIL

NOT TO SCALE

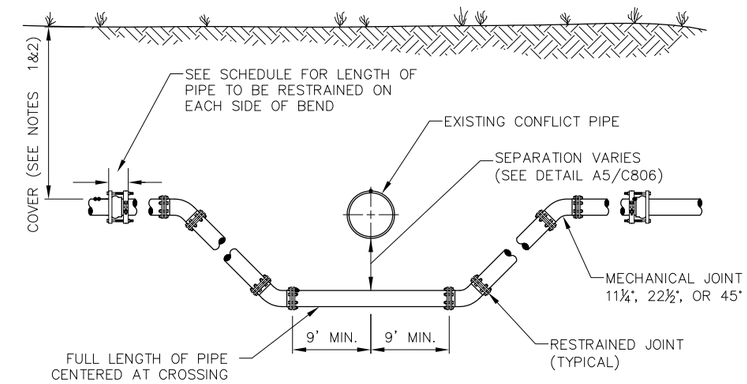

TYPE 'B' CROSSING

NOT TO SCALE

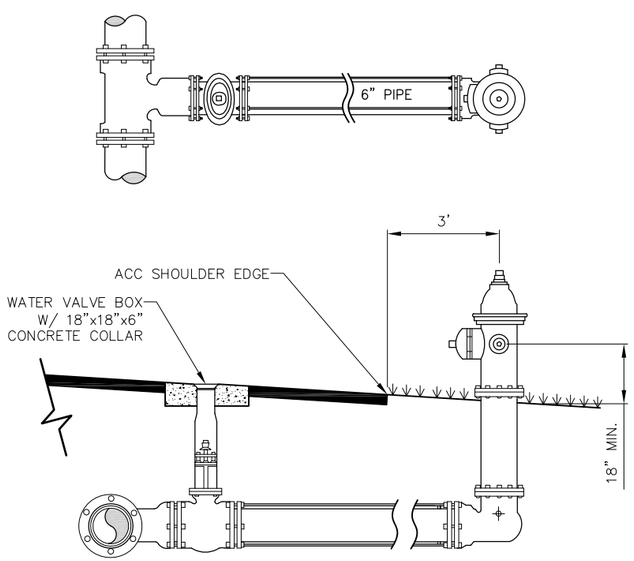

A1 / C806 FIRE HYDRANT DETAIL

NOT TO SCALE

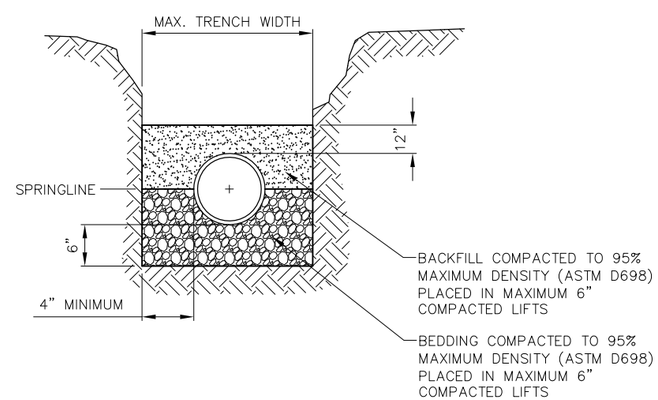

NOTES:

1) BELL HOLE SHALL BE DUG TO PERMIT THE ENTIRE STRAIGHT BARREL OF THE PIPE TO REST ON THE UNDISTURBED TRENCH BOTTOM. BOULDERS OR LOOSE ROCKS LARGER THAN 1" WILL NOT BE PERMITTED IN BACKFILL UP TO 1 FOOT ABOVE THE TOP OF PIPE.

2) SEE SPECIFICATION SECTION 31 23 00.00 20

A3 / C806 WATERMAIN TRENCH DETAIL

NOT TO SCALE

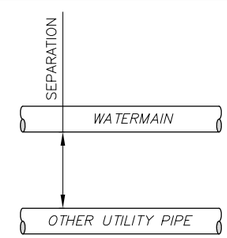

OTHER PIPING TYPE	MINIMUM HORIZONTAL SEPARATION (FEET)
GRAVITY SANITARY SEWER	10
SEWAGE FORCEMAIN	10
GRAVITY STORMWATER	3
RECLAIMED WATER	3
ELECTRIC, PHONE CABLE, GAS	2

MINIMUM HORIZONTAL SEPARATION REQUIREMENTS

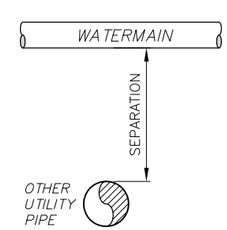

OTHER PIPING TYPE	MINIMUM VERTICAL SEPARATION (INCHES)
GRAVITY SANITARY SEWER	18
SEWAGE FORCEMAIN	18
GRAVITY STORMWATER	12
RECLAIMED WATER	12
ELECTRIC, PHONE CABLE, GAS	6

MINIMUM VERTICAL SEPARATION REQUIREMENTS

A5 / C806 MINIMUM SEPARATION FOR WATERMAINS

NOT TO SCALE

SYM	DESCRIPTION	DATE	APPR
---	---	---	---

SEAL

A/E INFO

APPROVED

FOR COMMANDER NAVFAC / B.L.T.L.

ACTIVITY: --

SATISFACTORY TO DATE: --

DES JWF | DRW JWF | CHK JWH

PROJECT MANAGER: LOVE

IPT TECH. BRANCH HEAD: --

CHIEF ENG/ARCH (CORE): FRANK

DEPARTMENT OF THE NAVY
NAVAL FACILITIES ENGINEERING COMMAND SOUTHEAST
IPT SOUTH ATLANTIC
NAVAL FACILITIES ENGINEERING COMMAND
NAVAL AIR STATION JACKSONVILLE
NAVAL AIR STATION JACKSONVILLE, FLORIDA

MH-60 APRON AND REPAIRS

WATERMAIN DETAILS

SCALE: NOT TO SCALE

EPROJECT NO.: 1291637

CONSTR. CONTR. NO. N69450-XX-C-XXXX

NAVFAC DRAWING NO. 15092006

SHEET 32 OF 44

C806

DRAWFORM REVISION: 7 AUGUST 2009

SHEET FORMAT IS 22" X 34". IF PRINTED SHEET IS NOT 22" X 34" THEN IT IS NOT TO SCALE

FILE NAME: P:\CBL\Project_Files\FLORIDA\NAS JACKSONVILLE FL\H\N00207\664-MH-60 APRON AND REPAIR-1291637\Working Technical Files\Drawings\Sheet\C806 WATERMAN DETAILS.dwg LAYOUT NAME: C806 WATERMAN DETAILS PLOTTED: Monday, December 15, 2014 - 1:28pm USER: jeffrey.w.frank

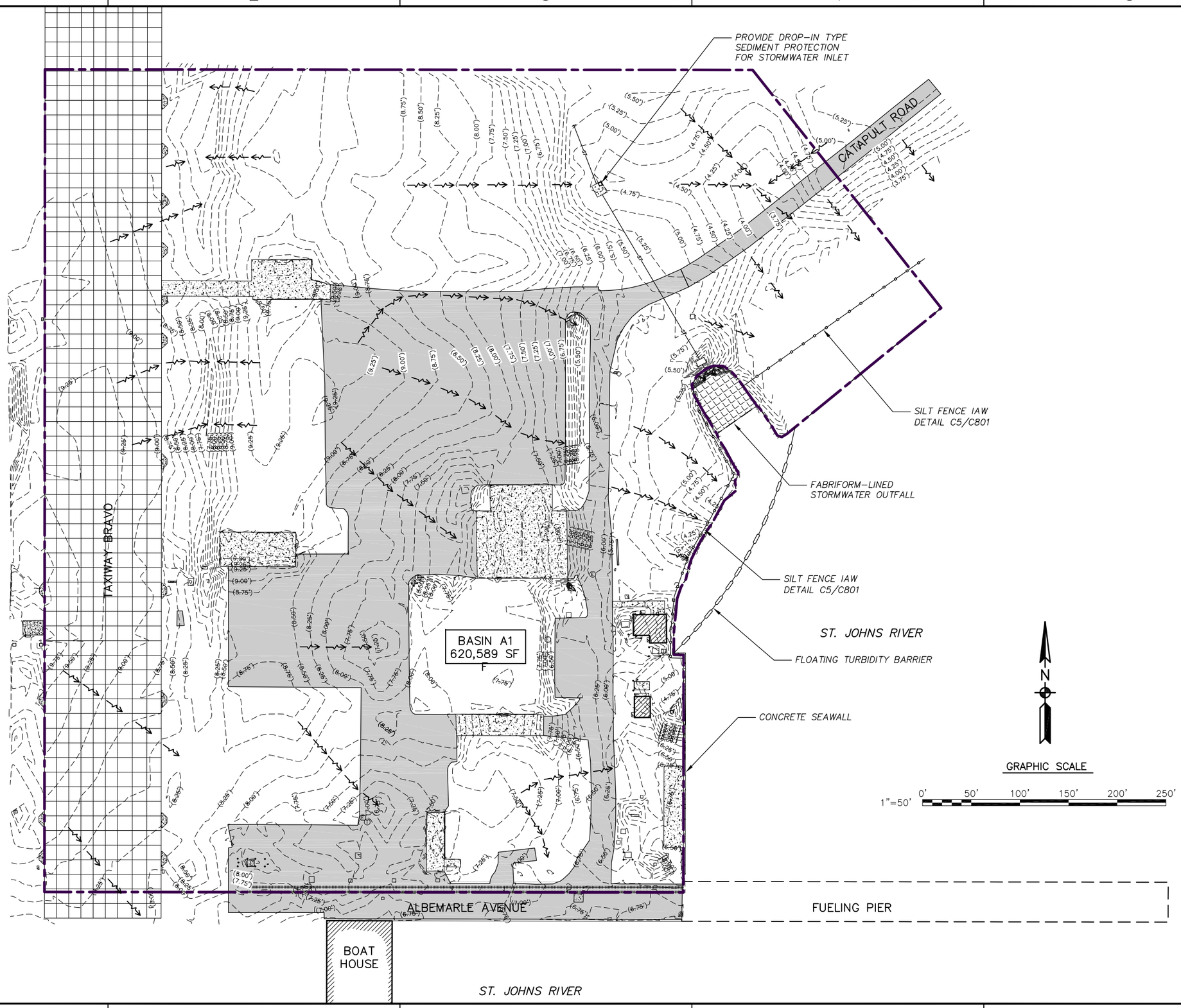

SYM	DESCRIPTION	DATE	APPR
---	---	---	---

NAVFAC

SEAL

A/E INFO

APPROVED

FOR COMMANDER NAVFAC / B.L.T.L.

ACTIVITY --

SATISFACTORY TO DATE --

DES JWF | DRW JWF | CHK JWH

PROJECT MANAGER LOVE

IPT TECH. BRANCH HEAD --

CHIEF ENG/ARCH (CORE) FRANK

DEPARTMENT OF THE NAVY
NAVAL FACILITIES ENGINEERING COMMAND
IPT SOUTH ATLANTIC

NAVAL FACILITIES ENGINEERING COMMAND SOUTHEAST
NAVAL AIR STATION JACKSONVILLE

NAVAL AIR STATION JACKSONVILLE, FLORIDA

MH-60 APRON AND REPAIRS

PRE-DEVELOPMENT DRAINAGE

SCALE: 1"=50'

EPROJECT NO.: 1291637

CONSTR. CONTR. NO. N69450-XX-C-XXXX

NAVFAC DRAWING NO. 15092007

SHEET 33 OF 44

SW001

DRAWFORM REVISION: 7 AUGUST 2009

FILE NAME: P:\CBL\Project_Files\FLORIDA\MAS JACKSONVILLE FLH)\N00207\(864-MH-60 APRON AND REPAIR-1291637\Working Technical Files\Drawings\Sheet\SW001 PRE-DEVELOPMENT DRAINAGE.dwg LAYOUT NAME: SW001 PRE-DEVELOPMENT DRAINAGE PLOTTED: Monday, December 15, 2014 - 1:30pm USER: jeffrey.w.frank

SHEET FORMAT IS 22" X 34". IF PRINTED SHEET IS NOT 22" X 34" THEN IT IS NOT TO SCALE

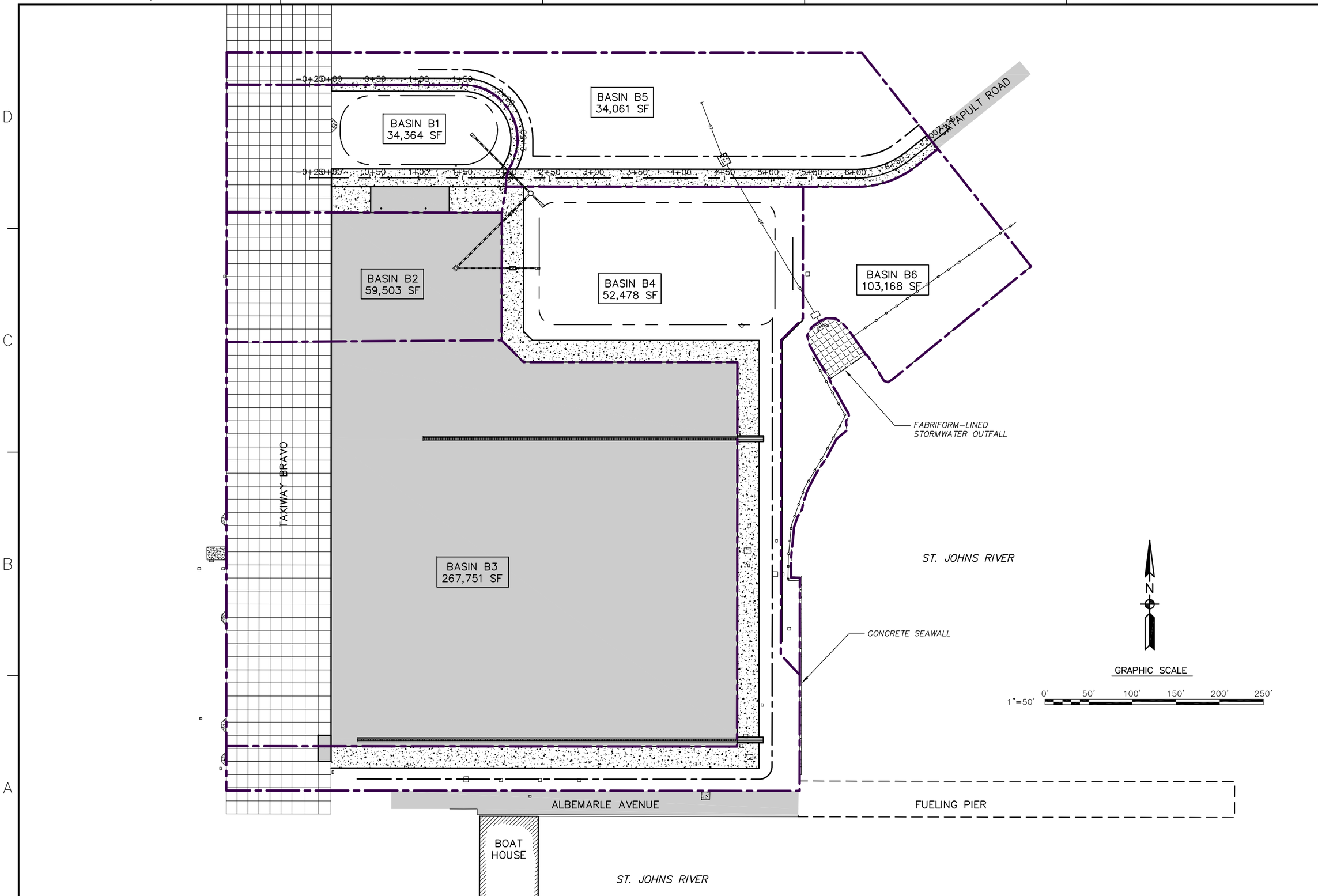

SYM	DESCRIPTION	DATE	APPR
---	---	---	---
---	---	---	---
---	---	---	---
---	---	---	---
---	---	---	---
---	---	---	---
---	---	---	---

NAVFAC

SEAL

A/E INFO

APPROVED

FOR COMMANDER NAVFAC / B.L.T.L.

ACTIVITY

--

SATISFACTORY TO DATE --

DES JWF | DRW JWF | CHK JWH

PROJECT MANAGER LOVE

IPT TECH. BRANCH HEAD --

CHIEF ENG/ARCH (CORE) FRANK

DEPARTMENT OF THE NAVY
NAVAL FACILITIES ENGINEERING COMMAND
IPT SOUTH ATLANTIC

NAVAL FACILITIES ENGINEERING COMMAND SOUTHEAST
NAVAL AIR STATION JACKSONVILLE

NAVAL AIR STATION JACKSONVILLE
JACKSONVILLE, FLORIDA

MH-60 APRON AND REPAIRS

POST–DEVELOPMENT DRAINAGE

SCALE: 1"=50'

EPROJECT NO.: 1291637

CONSTR. CONTR. NO. N69450–XX–C–XXXX

NAVFAC DRAWING NO. 15092008

SHEET 34 OF 44

SW002

DRAWFORM REVISION: 7 AUGUST 2009

SHEET FORMAT IS 22" X 34". IF PRINTED SHEET IS NOT 22" X 34" THEN IT IS NOT TO SCALE

FILE NAME: P:\CBL\Project_Files\FLORIDA\NAS JACKSONVILLE FL\H\N00207\664-MH-60 APRON AND REPAIR-1291637\Working Technical Files\Drawings\Sheet SW002 POST-DEVELOPMENT DRAINAGE.dwg LAYOUT NAME: SW002 POST-DEVELOPMENT DRAINAGE PLOTTED: Monday, December 15, 2014 – 1:32pm USER: jeffrey.w.frank

MECHANICAL ABBREVIATIONS LEGEND

SCALE: NTS

A

ABS	ABSOLUTE
ABV	ABOVE
ACH	AIR CHANGES PER HOUR
AD	ACCESS DOOR
ADJ	ADJUSTABLE
AFF	ABOVE FINISHED FLOOR
AFG	ABOVE FINISHED GRADE
AHU	AIR HANDLING UNIT
ALT	ALTITUDE
AMB	AMBIENT
ANSI	AMERICAN NATIONAL STANDARDS INSTITUTE
AP	ACCESS PANEL
APD	AIR PRESSURE DROP
APPROX	APPROXIMATE
ARF	ABOVE RAISED FLOOR
ASJ	ALL SERVICE JACKET
ATC	AUTOMATIC TEMPERATURE CONTROL
ATM	ATMOSPHERE
AW	ACID WASTE
AWS	ACID WASTE STACK
AVS	ACID VENT STACK

B

B	BOILER
BB	BASEBOARD HEATERS
BDD	BACKDRAFT DAMPER
B/F	BELOW FLOOR
BHP	BRAKE HORSEPOWER
BMS	BUILDING MANAGEMENT SYSTEM
BOD	BOTTOM OF DUCT
BOF	BOTTOM OF FAN
BOL	BOTTOM OF LOUVER
BOP	BOTTOM OF PIPE
BOS	BOTTOM OF STEEL
BTUH	BRITISH THERMAL UNIT PER HOUR

C

C	CELSIUS
CD	CONDENSATE DRAIN LINE
CFH	CUBIC FEET PER HOUR
CFM	CUBIC FEET PER MINUTE
CH	CHILLER
CHP	CHILLED WATER PUMP
CHS	CHILLED WATER SUPPLY
CHR	CHILLED WATER RETURN
CL	CENTER LINE
CLG	CEILING
CM	CENTIMETERS
CMU	CONCRETE MASONRY UNIT
CO	CLEANOUT
COL	COLUMN
CONN	CONNECT
CONT	CONTINUED
CP	CONTROL PANEL
CU FT	CUBIC FEET
CRU	COMPUTER ROOM UNIT
CT	COOLING TOWER
CUH	CABINET UNIT HEATER
CV	CONSTANT VOLUME
CWP	CONDENSER WATER PUMP
CWR	CONDENSER WATER RETURN
CWS	CONDENSER WATER SUPPLY

D

DAC	DUCTLESS SPLIT INDOOR UNIT
DB	DRY BULB
db	DECIBLES
DCU	DUCTLESS SPLIT OUTDOOR UNIT
DDC	DIRECT DIGITAL CONTROL
DEG	DEGREES
DIA	DIAMETER
DN	DOWN
DWG	DRAWING
DX	DIRECT EXPANSION

E

(E)	EXISTING MATERIAL OR EQUIPMENT
EA	EACH / EXHAUST AIR
EAT	ENTERING AIR TEMPERATURE
ECU	EVAPORATIVE COOLING UNIT
EDH	ELECTRIC DUCT HEATER
EER	ENERGY EFFICIENCY RATIO
EF	EXHAUST FAN
EL	ELEVATION
ELEC	ELECTRICAL / ELECTRIC
EQ	EQUIVALENT
ERV	ENERGY RECOVERY VENTILATOR
ESP	EXTERNAL STATIC PRESSURE
ET	EXPANSION TANK
EUH	ELECTRIC UNIT HEATER
EWC	ELECTRIC WATER COOLER
EWH	ELECTRIC WALL HEATER
EWS	EMERGENCY EYEWASH/SHOWER
EWT	ENTERING WATER TEMPERATURE
EXH	EXHAUST AIR
EXP	EXPANSION

F

F	FAHRENHEIT
FA	FIRE ALARM
FC	FLEXIBLE CONNECTOIN
FCO	FLOOR CLEANOUT
FCU	FAN COIL UNIT
FD	FIRE DAMPER/FLOOR DRAIN
FL	FLOOR
FLA	FULL LOAD AMPERES
FLD	FLOOR DRAIN
FOB	FLAT ON BOTTOM
FPB	FAN POWERED VARIABLE AIR VOLUME BOX
FPM	FEET PER MINUTE
FPS	FEET PER SECOND
FS	FLOOR SINK
FSD	FIRE/SMOKE DAMPER
FSK	FOIL SCRIM KRAFT
FT	FEET OR FOOT
FTG	FOOTING

G

GA	GAGE OR GAUGE
GAL	GALLON
GALV	GALVANIZED
GBD	GRAVITY BACKDRAFT DAMPER
GDH	GAS DUCT HEATER
GPD	GALLONS PER DAY
GPH	GALLONS PER HOUR
GPM	GALLONS PER MINUTE
GPU	GALLONS PER USE
GUH	GAS UNIT HEATER
GW	GREASE WASTE

H

HB	HOSE BIB
HOA	HAND–OFF–AUTOMATIC SWITCH
HP	HORSEPOWER
HPU	HEAT PUMP UNIT
HR	HOUR
HWP	HOT WATER PUMP
HWS	HOT WATER SUPPLY
HWR	HOT WATER RETURN
HX	HEAT EXCHANGER

I

ID	INSIDE DIAMETER
I.E.	INVERT ELEVATION
IN.	INCHES
WG.	WATER GAUGE
INV	INVERT

J

K

KG	KILOGRAMS
KPA	KILO PASCAL
KW	KILOWATTS

L

L	LOUVER
LAT	LEAVING AIR TEMPERATURE
LBS	POUNDS
LBS/HR	POUNDS PER HOUR
LD	LINEAR DIFFUSER
LG	LENGTH
LIQ	LIQUID
L/S	LITERS PER SECOND
LWT	LEAVING WATER TEMPERATURE

M

MAU	MAKE–UP AIR UNIT
MAX	MAXIMUM
MBH	BTU PER HOUR (THOUSAND)
MCA	MINIMUM CIRCUIT AMPS
MCC	MOTOR CONTROL CENTER
MD	MOTORIZED DAMPER
MECH	MECHANICAL
MEZZ	MEZZANINE
MIN	MINIMUM
MISC	MISCELLANEOUS
M	METERS
MM	MILLIMETERS
MOCP	MAXIMUM OVER–CURRENT PROTECTION
MOCP	MAXIMUM OVER–CURRENT PROTECTION
MTD	MOUNTED
MUW	MAKE–UP WATER

N

NC	NOISE CRITERIA
N.C.	NORMALLY CLOSED
NEG	NEGATIVE
NIC	NOT IN CONTRACT
NO.	NUMBER
N.O.	NORMALLY OPEN
NOM	NOMINAL
NTS	NOT TO SCALE

O

OA	OUTSIDE AIR
OAI	OUTSIDE AIR INTAKE
OAT	OUTSIDE AIR TEMPERATURE
OAU	OUTSIDE AIR UNIT
OBD	OPPOSED BLADE DAMPER
OC	ON CENTER
OD	OUTSIDE DIAMETER
OW	OILY WASTE
OZ	OUNCE

P

P	PUMP
PA	PASCAL
PD	PRESSURE DROP (FEET OF WATER)
PDI	PLUMBING DRAINAGE INSTITUTE
PH	PHASE
POC	POINT OF CONNECTION
POS	POSITIVE
PRI	PRIMARY
PRESS	PRESSURE
PSI	POUNDS PER SQUARE INCH
PSIG	PSI GAGE
PTAC	PACKAGED TERMINAL AIR CONDITIONER
PVC	POLYVINYL CHLORIDE

Q

QTY	QUANTITY

R

RA	RETURN AIR
RAD	REFRIGERATED AIR DRYER
RD	ROOF DRAIN
REF	REFERENCE
REL. A	RELIEF AIR
RH	RELATIVE HUMIDITY
RHC	REHEAT COIL
RI	ROOF INTAKE
RL	REFRIGERANT LIQUID/RAIN LEADER
RO	ROOF OPENING
RPM	REVOLUTIONS PER MINUTE
RS	REFRIGERANT SUCTION

S

SA	SUPPLY AIR
SCH	SCHEDULE
SD	SMOKE DETECTOR
SH	SHOWER
SKD	SMOKE DAMPER
SEER	SEASONAL ENERGY EFFICIENCY RATIO
SENS	SENSIBLE
SF	SQUARE FEET
SF	SUPPLY FAN
SP	STATIC PRESSURE (INCHES OF WATER)
SPEC	SPECIFICATION
SOV	SHUTT–OFF VALVE
SRD	SECONDARY ROOF DRAIN
SS	STAINLESS STEEL/SOIL STACK
ST	STORM DRAIN
STL	STEEL

T

TBD	TO BE DETERMINED
TEMP	TEMPERATURE
TOD	TOP OF DUCT
TOF	TOP OF FAN
TOL	TOP OF LOUVER
TOS	TOP OF STRUCTURE
TOT	TOTAL
TP	TOTAL PRESSURE / TRAP PRIMER
TSP	TOTAL STATIC PRESSURE
T–STAT	THERMOSTAT
TUP	TILT–UP
TYP	PANEL TYPICAL
T&P	TEMPERATURE & PRESSURE

U

UON	UNLESS OTHERWISE NOTED
U/F	UNDERFLOOR
U/G	UNDERGROUND

V

V	VOLT / VENT
VAV	VARIABLE AIR VOLUME
VEL	VELOCITY
VFD	VARIABLE FREQUENCY DRIVE
VOL	VOLUME
VTR	VENT THROUGH ROOF

W

W	WASTE
WB	WET BULB
WCO	WALL CLEANOUT
WG	WATER GUAGE
WH	WALL HYDRANT
WHA	WATER HAMPER ARRESTOR
WO	WALL OPENING
WPD	WATER PRESSURE DROP
WS	WASTE STACK
WSHP	WATER SOURCE HEAT PUMP
W/TP	WITH TRAP PRIMER
W/W	WATTS WITH
W/O	WITH OUT

X

Y

Z

ZD	Z–DUCT
ZN	ZONE

SYMBOLS LEGEND

SCALE: 1/8" = 1'–0"

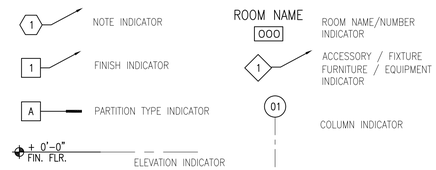

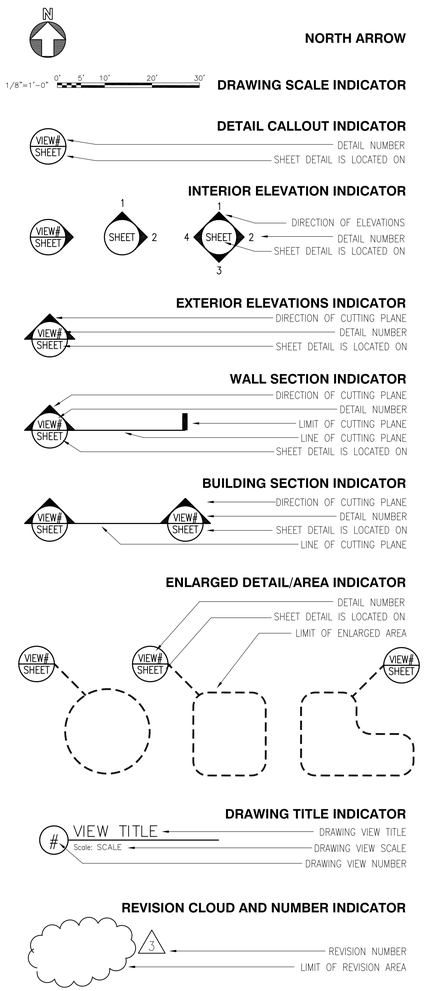

MECHANICAL LINETYPE LEGEND

SCALE: 1/8" = 1'–0"

	HIGH PRESSURE WATER RETURN		CHILLED WATER RETURN
	HIGH PRESSURE WATER SUPPLY		CHILLED WATER SUPPLY
RL	REFRIGERANT LIQUID	C	CONDENSOR WATER SUPPLY
	HOT/CHILLED WATER RETURN	CR	CONDENSOR WATER RETURN
	HOT/CHILLED WATER SUPPLY	BR	BRINE RETURN
D	DRAIN	B	BRINE SUPPLY
H	HUMIDIFICATION LINE	RS	REFRIGERANT SUCTION
	FILL LINE	RD	REFRIGERANT DISCHARGE

VALVES

SCALE: 1/8" = 1'–0"

VALVE: TPR	VALVE: PRED	VALVE: GLAM
VALVE: SWING SC	VALVE: PMTD	VALVE: GATE
VALVE: SWING GATE	VALVE: PLUG	VALVE: GATE ANGLE
VALVE: STSC	VALVE: NEEDLE	VALVE: GAMC
VALVE: SSC	VALVE: MTR	VALVE: FLSC
VALVE: SQUARE HD COCK	VALVE: MOLS	VALVE: DISCONNECT
VALVE: SOLN	VALVE: MOGS	VALVE: CWR
VALVE: SOL	VALVE: MNNS	VALVE: CHECK SPRING
VALVE: SNAP	VALVE: MANUAL	VALVE: BUTTERFLY
VALVE: SFSC	VALVE: MAGS	VALVE: BALL
VALVE: SCP	VALVE: HGSC	VALVE AHOS
VALVE: SCE	VALVE: HGLS	VALVE: ANGLE
VALVE: RELIEF	VALVE: HASC	VALVE: 3 WAY
VALVE: QUICK OPEN	VALVE: GSP	VALVE: 3 WAY PRESSURE
VALVE: PRESSURE REDUCER	VALVE: GLSE	VALVE: 3 WAY MOTORIZED

MECHANICAL GENERAL NOTES

SCALE: NTS

1. PROVIDE ALL APPROPRIATE LABOR, TOOLS, MATERIALS, EQUIPMENT, SUPERVISION, AND SERVICES TO INSTALL A COMPLETE AIRCRAFT (HELICOPTER) DIRECT FUELING SYSTEM TO EFFICIENTLY DELIVER FUEL TO A MH60 HELICOPTER AS INDICATED ON THE PROJECT DRAWINGS.
2. THIS PROJECT WILL MINIMIZE ANY INTERFERENCE WITH EXISTING OPERATIONS. COORDINATE ALL NECESSARY UTILITY OUTAGES WITH CONTRACTING OFFICER.
3. DRAWINGS INDICATE THE GENERAL DESIGN, LAYOUT, AND ARRANGEMENT OF THE WORK AND SHALL NOT BE CONSIDERED EQUIVALENT TO FABRICATION OR SHOP DRAWINGS. IT SHALL BE THE CONTRACTOR'S RESPONSIBILITY TO GENERATE FABRICATION / SHOP DRAWINGS AS NECESSARY FOR THE PANTOGRAPH DESIGN FOR THIS PROJECT. IT SHALL BE THE CONTRACTOR'S RESPONSIBILITY TO COORDINATE THE WORK OF HIS SUBCONTRACTORS, INCLUDING THE WORK OF THE VARIOUS TRADES AND DISCIPLINES EMPLOYED BY THE CONTRACTOR. NO ADDED COMPENSATION SHALL BE PERMITTED FOR VARIATIONS DUE TO LACK OF COORDINATION BY THE CONTRACTOR BETWEEN THE TRADES AND DISCIPLINES.
4. DRAWINGS ARE DIAGRAMMATIC AND SHOW MECHANICAL SYSTEMS IN DIMENSIONED PLANS, SECTIONS, AND ELEVATION'S. THE DRAWINGS DO NOT SHOW THE EXACT DETAILS OF ALL PIPING, CONDUIT, EQUIPMENT, OFFSETS, FITTINGS, APPURTENANCES, ETC. THAT MAY BE REQUIRED TO SUPPORT THE EQUIPMENT SUPPLIED FOR THIS PROJECT. FIELD VERIFY ALL EXISTING PIPE, CONDUIT, EQUIPMENT SIZES, ELEVATIONS, PENETRATIONS, AND INTERFACES WITH THE NEW WORK, AND VERIFY ALL DIMENSIONS, ELEVATIONS, CONNECTIONS, ETC. DETERMINED BY THE EQUIPMENT SELECTED AND SUPPLIED FOR THIS PROJECT. ADJUST SYSTEMS TO ENSURE THAT EQUIPMENT CAN BE INSTALLED IN THE ALLOTTED SPACE. NO ADDED COMPENSATION SHALL BE PERMITTED FOR VARIATIONS DUE TO EQUIPMENT SUPPLIED FOR THIS PROJECT.
5. CLEANUP OF ANY FUEL SPILLS AND/OR ANY REQUIRED REMEDIATION OF SOIL OR GROUNDWATER RESULTING FROM A FUEL SPILL DURING THIS PROJECT DUE TO THE CONTRACTOR'S WORK PERFORMANCE SHALL BE THE CONTRACTOR'S RESPONSIBILITY. PRECAUTIONS SHALL BE TAKEN TO PREVENT FUEL SPILLS FROM ENTERING THE ENVIRONMENT.
6. THE INFRASTRUCTURE FOR THIS DIRECT FUELING SYSTEM SHALL HAVE THE CAPACITY TO DELIVER FUEL TO THE HELICOPTER AT THE MAXIMUM FLOW RATE OF 150 GPM BASED ON 55 PSIG PRESSURE AT THE AIRCRAFT FUELING NOZZLE.
7. PIPING MATERIALS: PIPING INCLUDING THE DIRECT FUELING PANTOGRAPH WILL BE TYPE 304L OR TYPE 316L STAINLESS STEEL.
8. ALL PIPING, SUPPORTS, AND EQUIPMENT, EXCEPT STAINLESS STEEL MATERIALS, SHALL BE PROVIDED WITH A FIELD APPLIED 3–COAT PAINT SYSTEM IN ACCORDANCE WITH THE PROJECT SPECIFICATIONS.
9. SEE CIVIL DRAWINGS FOR CONCRETE EQUIPMENT PAD DIMENSIONS AND SPECIFICATIONS. PROVIDE STEEL REINFORCING FOR CONCRETE EQUIPMENT PADS AND FOUNDATIONS.

EQUIPMENT ANNOTATION

AHU–1	AIR HANDLING UNIT, NUMBER 1.
B–1	BOILER, NUMBER 1.
CH–1	CHILLER NUMBER 1.
CRU–1	COMPUTER ROOM AC UNIT, NUMBER 1.
DDC	DIRECT DIGITAL CONTROL.
EF–1	EXHAUST FAN, NUMBER 1.
FCU–1	FAN COIL UNIT, NUMBER 1.
GV–1	GRAVITY VENT NUMBER 1
HWC–1	HOT WATER COIL NO.1
PCHWP–1	PRIMARY CHILLED WATER PUMP NUMBER 1.
PHWP–1	PRIMARY HOT WATER PUMP, NUMBER 1.
SA–1	SOUND ATTENUATOR, NUMBER 1.
SCHWP–1	SECONDARY CHILLED WATER PUMP NO. 1.
SF–1	SUPPLY FAN NO.1
UH–1	UNIT HEATER NO.1
V–1	VARIABLE AIR VOLUME TERMINAL UNIT NO. 1.

AIR DEVICE DESIGNATION

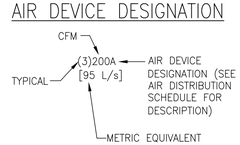

DESIGN CONDITIONS							
LOCATION	LATITUDE	ELEVATION	WINTER		SUMMER		
			OUTDOOR (FdB/CdB)	INDOOR (FdB/CdB)	OUTDOOR (FdB/CdB)	OUTDOOR (FwB/CwB)	INDOOR (FdB/CdB)
JACKSONVILLE, FL	30	35 [10.7m]	35/1.7	68/20	93/34	81/27.2	75/24

APPLICABLE CODES

2012 INTERNATIONAL BUILDING CODE
2012 INTERNATIONAL MECHANICAL CODE
2012 INTERNATIONAL PLUMBING CODE
2012 NATIONAL ELECTRICAL CODE
2012 LIFE SAFETY CODE

GLOSSARY

FURNISH:	PURCHASE AND DELIVER (EQUIPMENT) TO THE JOBSITE ONLY
INSTALL:	PROVIDE ALL MISCELLANEOUS MATERIALS & SERVICES (LABOR & MATERIAL) REQUIRED TO MAKE EQUIPMENT OPERATIONAL
PROVIDE:	FURNISH & INSTALL
REMARKS:	INFORMATION PERTAINING TO ALL ITEMS ON A SCHEDULE
NOTES:	INFORMATION PERTAINING ONLY TO INDICATED ITEMS ON A SCHEDULE

SYM	DESCRIPTION	DATE	APPR
---	---	---	---
---	---	---	---
---	---	---	---
---	---	---	---
---	---	---	---
---	---	---	---
---	---	---	---

NAVFAC

SEAL

A/E INFO

APPROVED

FOR COMMANDER NAVFAC / B.L.T.L.

ACTIVITY

--

SATISFACTORY TO DATE --

DES BB DRW BB CHK SEY

PROJECT MANAGER S. LOVE

IPT TECH. BRANCH HEAD N/A

CHIEF ENG/ARCH (CORE) S. YEKALIS

DEPARTMENT OF THE NAVY
NAVAL FACILITIES ENGINEERING COMMAND
NAVAL FACILITIES ENGINEERING COMMAND SOUTHEAST
IPT SOUTH ATLANTIC
NAVAL AIR STATION JACKSONVILLE
NAVAL AIR STATION JACKSONVILLE, FLORIDA JACKSONVILLE, FLORIDA

MH-60 APRON AND REPAIRS

GENERAL NOTES SYMBOLS AND LEGENDS

SCALE: SCALE

EPROJECT NO.: 1291637

CONSTR. CONTR. NO. N69450–XX–C–XXXX

NAVFAC DRAWING NO. 15092009

SHEET 35 OF 44

M001

DRAWFORM REVISION: 7 AUGUST 2009

FILE NAME: P:\CIBL\Project_Files\FLORIDA\MAS JACKSONVILLE FL\H\N00207\664-MH-60 APRON AND REPAIR-1291637\Working Technical Files\Drawings\Sheet\M001 GENERAL NOTES SYMBOLS AND LEGENDS LAYOUT NAME: M001 GENERAL NOTES SYMBOLS AND LEGENDS PLOTTED: Thursday, December 11, 2014 – 1:53pm USER: brittany.brubaker

SHEET FORMAT IS 22" X 34". IF PRINTED SHEET IS NOT 22" X 34", THEN IT IS NOT TO SCALE

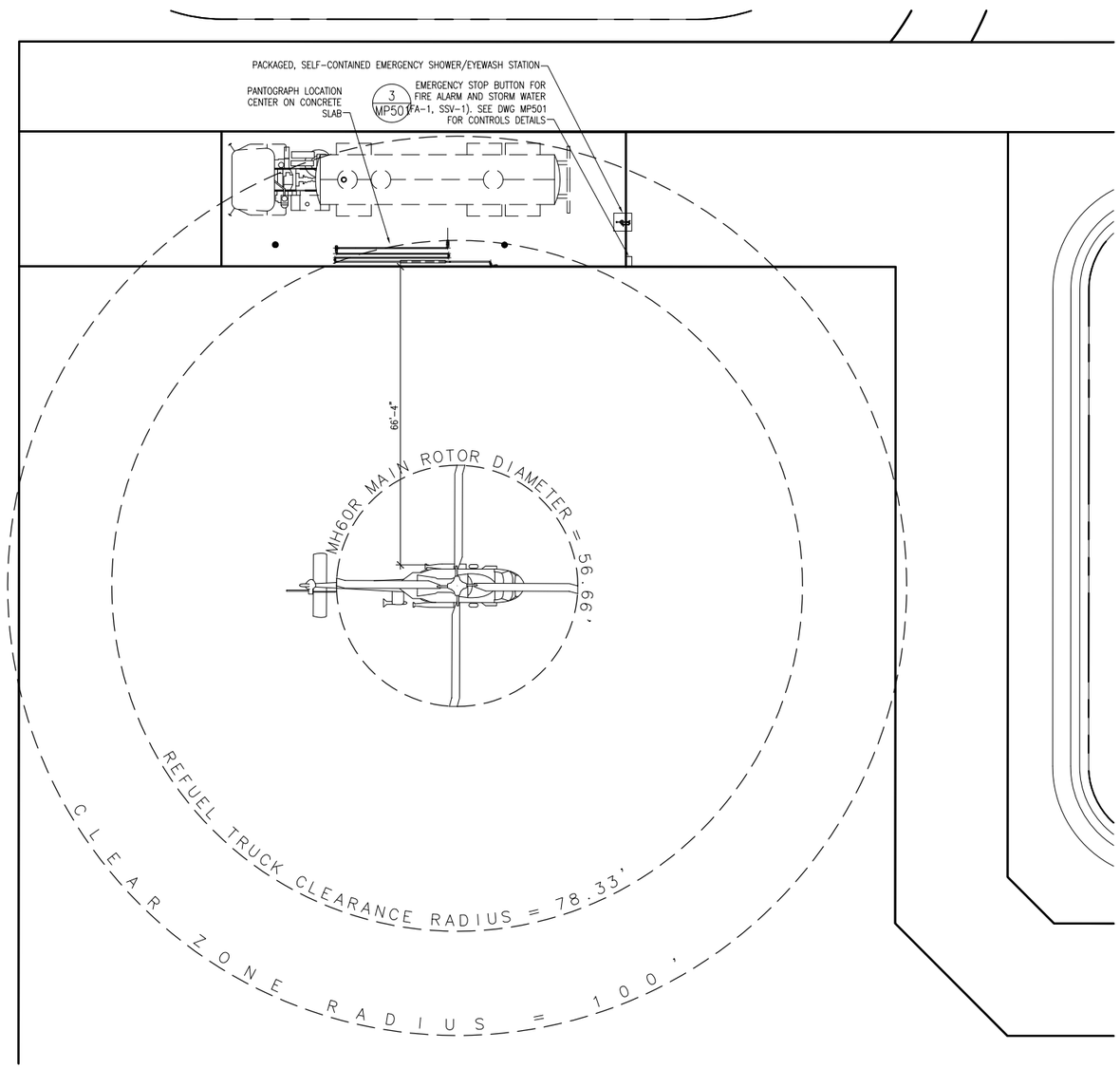

1 MECHANICAL SITE PLAN
Scale: 1/16" = 1'-0"

GENERAL SHEET NOTES

1. CONTRACTOR SHALL LAYOUT THE ARRANGEMENT OF THE PANTOGRAPH ON THE CONCRETE REFUELING AREA PAD BASED ON THE PROPOSED LOCATION OF THE REFUELER AND THE MH60 HELICOPTER. SUBMIT PANTOGRAPH ARRANGEMENT FOR REVIEW AND APPROVAL.

2. PER UF 3-460-01 AND NAVY DEFINITIVE DESIGN FOR HOT PIT REFUELING, NO COMPONENT OF THE PANTOGRAPH ASSEMBLY SHALL BE MORE THAN 36" ABOVE FINISHED GRADE.

3. CONTRACTOR SHALL PROVIDE AND INSTALL ALL ACCESSORIES FOR THE PANTOGRAPH SYSTEM, INCLUDING STOP POSTS, ARRESTING CABLES, CASTERS, PULL HANDLE, HINGED HOLDING BRACKET WITH HASP AND LOCK, PRESSURE FUELING NOZZLE WITH 60 MESH STRAINER, HOSE END PRESSURE CONTROLLED WITH DRY BREAK COUPLING AND DUST CAP, PRESSURE FUELING HOSE WITH GROUNDING WIRE, EMERGENCY BREAK-AWAY COUPLING, AND HOSE TRAY.

4. FIRE ALARM SYSTEM SHALL BE CONNECTED TO LOCAL DISPATCH SYSTEM, COORDINATE WITH CONTRACTING REPRESENTATIVE FOR INFORMATION.

5. FUELING STATION AREA RUNOFF SHALL BE IN ACCORDANCE WITH CURRENT STATE, FEDERAL AND LOCAL ENVIRONMENTAL REGULATIONS. REFER TO CIVIL DRAWINGS.

N
PLAN NORTH

GRAPHIC SCALE

1/16"=1'-0" 0' 5' 10' 20' 30' 40' 50' 60'

SUBMITTAL TITLE
SUBMITTAL DATE

SYM	DESCRIPTION	DATE	APPR
--	--	--	--
--	--	--	--
--	--	--	--
--	--	--	--
--	--	--	--
--	--	--	--
--	--	--	--
--	--	--	--

NAVFAC

SEAL

A/E INFO

APPROVED

FOR COMMANDER NAVFAC / B.L.T.L.

ACTIVITY
--

SATISFACTORY TO DATE --

DES BB DRW BB CHK SEY

PROJECT MANAGER S. LOVE

IPT TECH. BRANCH HEAD N/A

CHIEF ENG/ARCH (CORE) S. YEKALIS

DEPARTMENT OF THE NAVY
NAVAL FACILITIES ENGINEERING COMMAND
IPT SOUTH ATLANTIC
NAVAL FACILITIES ENGINEERING COMMAND SOUTHEAST
NAVAL AIR STATION JACKSONVILLE
NAVAL AIR STATION JACKSONVILLE JACKSONVILLE, FLORIDA
MH-60 APRON AND REPAIRS
MECHANICAL SITE PLAN

SCALE: SCALE

EPROJECT NO.: 1291637

CONSTR. CONTR. NO. N69450-XX-C-XXXX

NAVFAC DRAWING NO. 15092010

SHEET 000 OF 44

MS101

DRAWFORM REVISION: 7 AUGUST 2009

FILE NAME: P:\CIBL\Project_Files\FLORIDA\NAS JACKSONVILLE FL\H)N00207\664-MH-60 APRON AND REPAIR-1291637\Working Technical Files\Drawings\Sheet\MS101 MECHANICAL SITE PLAN.dwg LAYOUT NAME: MS101 MECHANICAL SITE PLAN PLOTTED: Wednesday, January 14, 2015 - 10:36am USER: brittany.brubaker

SHEET FORMAT IS 22" X 34". IF PRINTED SHEET IS NOT 22" X 34", THEN IT IS NOT TO SCALE

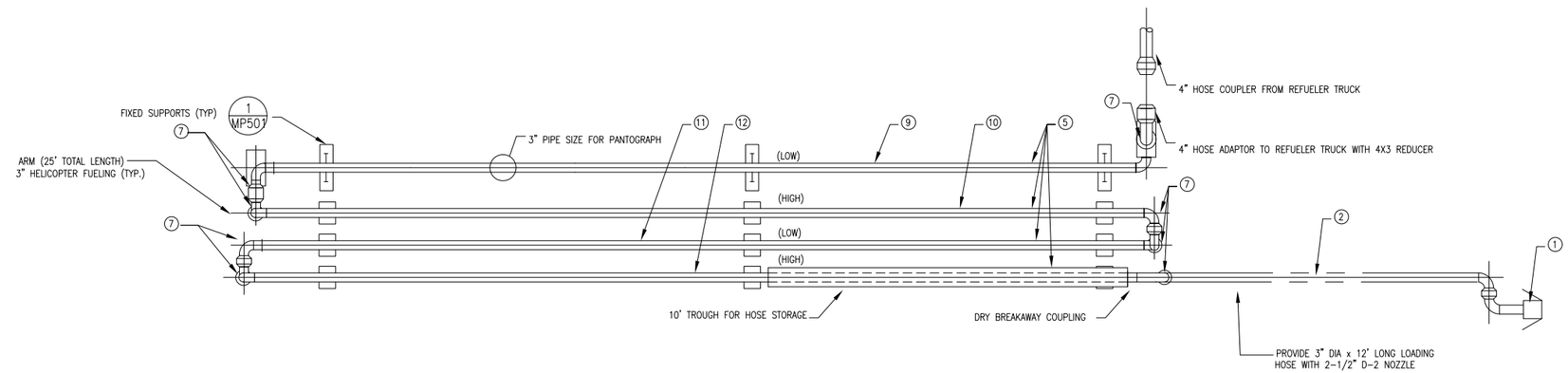

1 PANTOGRAPH LAYOUT
Scale: 1/2" = 1'-0"

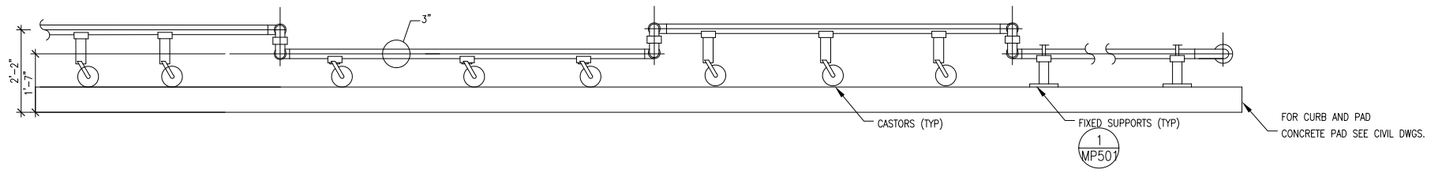

2 PANTOGRAPH SECTION
Scale: 1/2" = 1'-0"

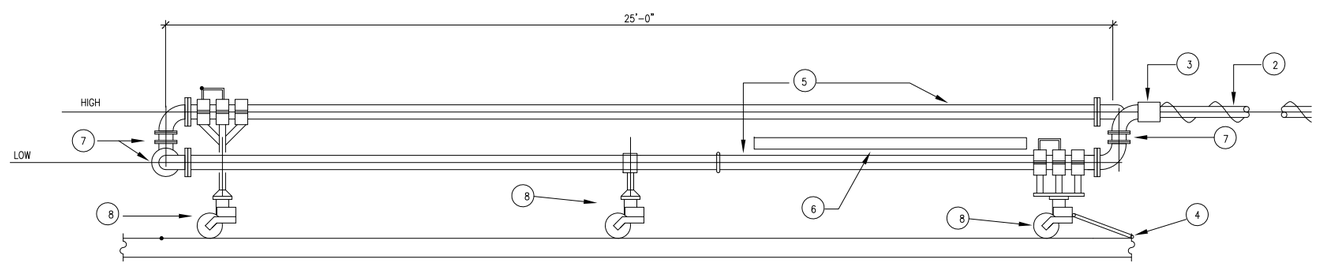

3 PANTOGRAPH PIPING SECTION
Scale: 1/2" = 1'-0"

GENERAL SHEET NOTES

1. THE PANTOGRAPH ILLUSTRATED IS NOT REPRESENTATIVE OF ONE MANUFACTURER AND IS NOT INTENDED TO RESTRICT PRODUCTS OF OTHER MANUFACTURERS. REFER TO SECTION UFGS 33 52 43.36 20 – MECHANICAL EQUIPMENT, FUELING, FOR ALLOWABLE OPTIONAL DESIGNS. THE PANTOGRAPH SUPPLIED SHALL BE NAVFAC/NAVAIR APPROVED. CONTRACTOR SHALL PROVIDE A COMPLETE SUBMITTAL OF PANTOGRAPH AND ALL COMPONENTS FOR REVIEW.

2. ALL STRAIGHT SECTIONS, FITTINGS, AND OTHER ACCESSORIES SHALL BE FACTORY PREFABRICATED TO JOB DIMENSIONS.

3. THE INTENT OF THIS PANTOGRAPH IS ONE FIXED LENGTH OF PIPING WITH THREE MOVABLE ARMS AT 25 FT EACH AND A 12 FT HOSE PLACED ON A TROUGH AT THE HELICOPTER FUELING CONNECTION SIDE OF THE PANTOGRAPH.

KEYED NOTES

1. 2 ½" TYPE D-2 PRESSURE FUELING NOZZLE WITH VACUUM TIGHT DUST CAP, 60 MESH STRAINER, HOSE END PRESSURE REGULATOR, DRY BREAK DISCONNECT.
2. 2 ½" DIAMETER API 1529 AIRCRAFT REFUELING HOSE. NOMINAL 12' LENGTH HOSE TO HAVE EXTERNALLY WRAPPED BOND WIRE FROM HOSE COUPLING TO HOSE COUPLING.
3. EMERGENCY BREAKAWAY COUPLING.
4. PULL HANDLE.
5. FOUR SECTION PIPE, SS PANTOGRAPH NOMINAL LENGTH 25' PER PIPE SECTION, DIAMETER OF PANTOGRAPH SHALL BE 3".
6. HOSE TROUGH, SEE DETAIL 5 / MP501
7. SWIVEL JOINTS (TYP.)
8. ALL TERRAIN WHEELS (TYP FOR 9)
9. FIRST PANTOGRAPH SECTION IS FIXED WITH THREE SUPPORTS.
10. SECOND PANTOGRAPH SECTION TRANSLATES WITH THREE SETS OF ALL TERRAIN WHEELS. (HIGH)
11. THIRD PANTOGRAPH SECTION TRANSLATES WITH 3 SETS OF ALL TERRAIN WHEELS. (LOW)
12. FOURTH PANTOGRAPH SECTION TRANSLATES WITH 3 SETS OF ALL TERRAIN WHEELS. (HIGH)

N
PLAN NORTH

GRAPHIC SCALE

1/8"=1'-0" 0' 5' 10' 20' 30'

SUBMITTAL TITLE
SUBMITTAL DATE

SYM	DESCRIPTION	DATE	APPR
---	---	---	---
---	---	---	---
---	---	---	---
---	---	---	---
---	---	---	---
---	---	---	---
---	---	---	---

NAVFAC

SEAL

A/E INFO

APPROVED

FOR COMMANDER NAVFAC / B.L.T.L.

ACTIVITY --

SATISFACTORY TO DATE --

DES BB DRW BB CHK SEY

PROJECT MANAGER S. LOVE

IPT TECH. BRANCH HEAD N/A

CHIEF ENG/ARCH (CORE) S. YEKALIS

DEPARTMENT OF THE NAVY
NAVAL FACILITIES ENGINEERING COMMAND
IPT SOUTH ATLANTIC
NAVAL FACILITIES ENGINEERING COMMAND SOUTHEAST
NAVAL AIR STATION JACKSONVILLE
NAVAL AIR STATION JACKSONVILLE JACKSONVILLE, FLORIDA
MH-60 APRON AND REPAIRS
PANTOGRAPH SYSTEM

SCALE: SCALE
EPROJECT NO.: 1291637
CONSTR. CONTR. NO. N69450-XX-C-XXXX
NAVFAC DRAWING NO. 15092011
SHEET 000 OF 44
MP101

DRAWFORM REVISION: 7 AUGUST 2009

FILE NAME: P:\CBL\Project_Files\FLORIDA\NAS JACKSONVILLE FL\H\N00207\664-MH-60 APRON AND REPAIR-1291637\Working Technical Files\Drawings\SheetMP101 PANTOGRAPH SYSTEM.dwg LAYOUT NAME: MP101 PANTOGRAPH SYSTEM PLOTTED: Wednesday, January 14, 2015 - 10:34am USER: brittany.brubaker

SHEET FORMAT IS 22" X 34". IF PRINTED SHEET IS NOT 22" X 34", THEN IT IS NOT TO SCALE

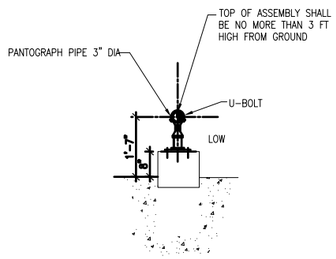

NOTE: APPLICABLE TO FIXED PANTAGRAPH ARM ONLY.

1 PIPING SUPPORT DETAIL
Scale: 1/2" = 1'-0"

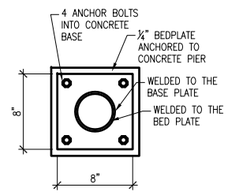

2 BASEPLATE
Scale: NTS

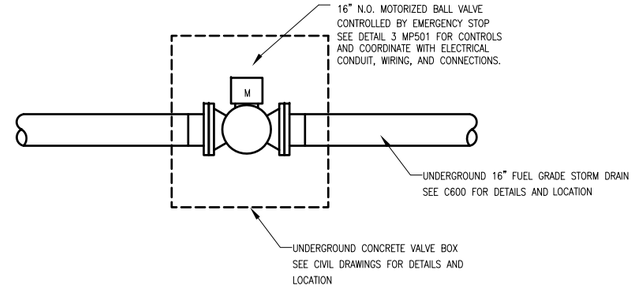

4 MOTORIZED BALL VALVE (SSV-1)
Scale: NTS

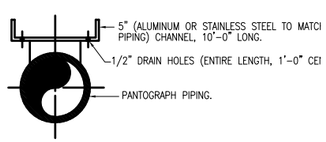

5 PIPE TROUGH DETAIL
Scale: 1/4" = 1'-0"

SEQUENCE OF OPERATION

SSV – 1 : STORM WATER SHUT OFF VALVE	
CONDITION	VALUE/ACTION
STORM WATER EMERGENCY BUTTON DEPRESSED	ENABLE, CLOSE
STORM WATER EMERGENCY BUTTON RELEASED	FULLY OPEN

FA – 1 : FIRE ALARM EMERGENCY	
CONDITION	VALUE/ACTION
FIRE ALARM EMERGENCY BUTTON DEPRESSED	ALARM SENT TO NAS JACKSONVILLE FIRE AND RESCUE

3 SEQUENCE
Scale: NTS

EMERGENCY STOP AND RESET

1. DEPRESSION OF THE EMERGENCY SHUT-OFF (ESO) PUSHBUTTON OR ACTIVATION OF THE FIRE ALARM SYSTEM SHALL STOP FUELING OPERATIONS AND CLOSE MOTOR OPERATED VALVE (SSV-1).

2. IN ORDER TO RESET SYSTEM AFTER AN ALARM, RESET THE INITIAL ACTIVATED EMERGENCY STOP PUSHBUTTON STATION. THIS SHALL CAUSE NORMALLY OPEN VALVE TO RETURN TO OPEN POSITION.

NO.	DESCRIPTION	DATE	APPR.
---	---	---	---
---	---	---	---
---	---	---	---
---	---	---	---
---	---	---	---
---	---	---	---
---	---	---	---
---	---	---	---

NAVFAC

SEAL

A/E INFO

APPROVED
FOR COMMANDER NAVFAC / B.L.T.L.
ACTIVITY
--
SATISFACTORY TO DATE --
DES BB | DRW BB | CHK SEY
PROJECT MANAGER S. LOVE
IPT TECH. BRANCH HEAD N/A
CHIEF ENG/ARCH (CORE) S. YEKALIS

DEPARTMENT OF THE NAVY
NAVAL FACILITIES ENGINEERING COMMAND
IPT SOUTH ATLANTIC
NAVAL FACILITIES ENGINEERING COMMAND SOUTHEAST
NAVAL AIR STATION JACKSONVILLE
NAVAL AIR STATION JACKSONVILLE JACKSONVILLE, FLORIDA
MH-60 APRON AND REPAIRS
DETAILS

SCALE: SCALE
EPROJECT NO.: 1291637
CONSTR. CONTR. NO. N69450-XX-C-XXXX
NAVFAC DRAWING NO. 15092012
SHEET 38 OF 44
MP501

DRAWFORM REVISION: 7 AUGUST 2009

FILE NAME: P:\CBL\Project_Files\FLORIDA\NAS JACKSONVILLE FL(H)\N00207\664-MH-60 APRON AND REPAIR-1291637\Working Technical Files\Drawings\SheetMP501 DETAILS.dwg LAYOUT NAME: MP501 DETAILS PLOTTED: Wednesday, January 14, 2015 - 10:32am USER: brittany.brubaker

SHEET FORMAT IS 22" X 34". IF PRINTED SHEET IS NOT 22" X 34", THEN IT IS NOT TO SCALE

SUBMITTAL TITLE
SUBMITTAL DATE

A. GENERAL

1. THE ELECTRICAL INSTALLATION, AS A MINIMUM, SHALL MEET THE NATIONAL ELECTRICAL CODE, UFC'S AND LOCAL REGULATIONS.
2. THE CONTRACTOR SHALL ASCERTAIN THAT ALL LIGHTING SYSTEM COMPONENTS FURNISHED BY HIM (INCLUDING FAA APPROVED EQUIPMENT) ARE COMPATIBLE IN ALL RESPECTS WITH EACH OTHER AND THE REMAINDER OF THE NEW/EXISTING SYSTEM. ANY NON-COMPATIBLE COMPONENTS FURNISHED BY THIS CONTRACTOR SHALL BE REPLACED BY HIM AT NO ADDITIONAL COST TO THE GOVERNMENT WITH A SIMILAR UNIT APPROVED BY THE CONTRACTING OFFICER (DIFFERENT MODEL OR DIFFERENT MANUFACTURER) THAT IS COMPATIBLE WITH THE REMAINDER OF THE AIRPORT LIGHTING SYSTEM.
3. IN CASE THE CONTRACTOR SELECTS TO FURNISH AND INSTALL AIRPORT LIGHTING EQUIPMENT REQUIRING ADDITIONAL WIRING, TRANSFORMERS, ADAPTERS, MOUNTINGS, ETC. IN LIEU OF THOSE SHOWN ON THE DRAWINGS AND/OR LISTED IN THE SPECIFICATIONS, ANY COST FOR THESE ITEMS SHALL BE INCIDENTAL TO THE EQUIPMENT COST.
4. WHEN A SPECIFIC TYPE, STYLE, CLASS, ETC. OF FAA APPROVED EQUIPMENT IS SPECIFIED, ONLY THAT TYPE, STYLE, CLASS, ETC. WILL BE ACCEPTABLE EVEN THOUGH EQUIPMENT OF OTHER TYPES, STYLES, CLASSES, ETC. MAY BE FAA APPROVED.
5. ANY AND ALL INSTRUCTIONS FROM THE CONTRACTING OFFICER TO THE CONTRACTOR REGARDING CHANGES IN OR DEVIATIONS FROM THE PLANS AND SPECIFICATIONS SHALL BE IN WRITING. THE CONTRACTOR SHALL NOT ACCEPT ANY VERBAL INSTRUCTIONS FROM THE CONTRACTING OFFICER REGARDING ANY CHANGES FROM THE PLANS AND SPECIFICATIONS.

B. POWER AND CONTROL

1. STENCIL ALL ELECTRICAL EQUIPMENT TO IDENTIFY FUNCTION, CIRCUIT VOLTAGE AND PHASE. WHERE THE EQUIPMENT CONTAINS FUSES, ALSO STENCIL THE FUSE OR FUSE LINK AMPERE RATING. WHERE THE EQUIPMENT DOES NOT HAVE SUFFICIENT STENCILING AREA, THE STENCILING SHALL BE DONE ON THE WALL NEXT TO THE UNIT. THE LETTERS SHALL BE ONE INCH HIGH AND PAINTED IN WHITE OR BLACK PAINT TO PROVIDE THE HIGHEST CONTRAST WITH THE BACKGROUND.
2. COLOR CODE ALL PHASE WIRING BY THE USE OF COLORED WIRE INSULATION AND/OR COLORED TAPE. WHERE TAPE IS USED, THE WIRE INSULATION SHALL BE BLACK. BLACK AND RED SHALL BE USED FOR SINGLE-PHASE, THREE WIRE SYSTEMS AND BLACK, RED AND BLUE SHALL BE USED FOR THREE-PHASE SYSTEMS. NEUTRAL CONDUCTORS, SIZE NO. 6 AWG OR SMALLER, SHALL BE IDENTIFIED BY A CONTINUOUS WHITE OR NATURAL GRAY OUTER FINISH ALONG ITS ENTIRE LENGTH. NEUTRAL CONDUCTORS LARGER THAN NO. 6 AWG SHALL BE IDENTIFIED BY EITHER BY A CONTINUOUS WHITE OR NATURAL GRAY OUTER FINISH ALONG ITS ENTIRE LENGTH OR BY THE USE OF WHITE TAPE AT ITS TERMINATIONS AND INSIDE ACCESSIBLE WIREWAYS.
3. ALL BRANCH CIRCUIT CONDUCTORS CONNECTED TO A PARTICULAR PHASE SHALL BE IDENTIFIED WITH THE SAME COLOR. THE COLOR CODING SHALL BE EXTENDED TO THE POINT OF UTILIZATION.
4. IN CONTROL WIRING, THE SAME COLOR SHALL BE USED THROUGHOUT THE SYSTEM FOR THE SAME FUNCTION SUCH AS 10%, 30%, 100% BRIGHTNESS CONTROL, ETC.
5. ALL POWER AND CONTROL CIRCUIT CONDUCTORS SHALL BE COPPER; ALUMINUM SHALL NOT BE ACCEPTED. THIS INCLUDES WIRE, CABLE, BUSSES, TERMINALS, SWITCH/PANEL COMPONENTS, ETC.
6. LOW VOLTAGE (600V) AND HIGH VOLTAGE (5000V) CONDUCTORS SHALL BE INSTALLED IN SEPARATE WIREWAYS.
7. NEATLY LACE WIRING IN DISTRIBUTION PANELS, WIREWAYS, SWITCHES AND JUNCTION/PULL BOXES.
8. THE MINIMUM SIZE OF PULL/JUNCTION BOXES, REGARDLESS OF THE QUANTITY AND THE SIZE OF THE CONDUCTORS SHOWN, SHALL BE AS FOLLOWS:
   A. IN STRAIGHT PULLS, THE LENGTH OF THE BOX SHALL NOT BE LESS THAN EIGHT TIMES THE TRADE DIAMETER OF THE LARGER CONDUIT. THE TOTAL AREA (INCLUDING THE CONDUIT CROSS-SECTIONAL AREA) OF A BOX END SHALL BE AT LEAST THREE TIMES GREATER THAN THE TOTAL TRADE CROSS-SECTIONAL AREA OF THE CONDUITS TERMINATING AT THE END.
   B. IN ANGLE OR U PULLS, THE DISTANCE BETWEEN EACH CONDUIT ENTRY INSIDE THE BOX AND THE OPPOSITE WALL OF THE BOX SHALL NOT BE LESS THAN SIX TIMES THE TRADE DIAMETER OF THE LARGEST CONDUIT. THIS DISTANCE SHALL BE INCREASED FOR ADDITIONAL ENTRIES BY THE AMOUNT OF THE SUM OF THE DIAMETERS OF ALL OTHER CONDUIT ENTRIES ON THE SAME WALL OF THE BOX. THE DISTANCE BETWEEN CONDUIT ENTRIES ENCLOSING THE SAME CONDUCTOR SHALL NOT BE LESS THAN SIX TIMES THE TRADE DIAMETER OF THE LARGEST CONDUIT.
9. A RUN OF CONDUIT BETWEEN TERMINATIONS AT EQUIPMENT ENCLOSURES, SQUARE DUCTS AND PULL/JUNCTION BOXES SHALL NOT CONTAIN MORE THAN THE EQUIVALENT OF FOUR QUARTER BENDS (360 DEGREES TOTAL), INCLUDING THOSE BENDS LOCATED IMMEDIATELY AT THE TERMINATIONS. CAST, CONDUIT TYPE OUTLETS SHALL NOT BE TREATED AS PULL/JUNCTION BOXES.
10. EQUIPMENT CABINETS SHALL NOT BE USED AS PULL/JUNCTION BOXES. ONLY WIRING TERMINATING AT THE EQUIPMENT SHALL BE BROUGHT INTO THESE ENCLOSURES.
11. SPLICES AND JUNCTION POINTS SHALL BE PERMITTED ONLY IN JUNCTION BOXES, DUCTS EQUIPPED WITH REMOVABLE COVERS AND AT EASILY ACCESSIBLE LOCATIONS.
12. NOT IN USED.
13. DUAL LUGS SHALL BE USED WHERE TWO WIRES, SIZE NO. 6 OR LARGER, ARE TO BE CONNECTED TO THE SAME TERMINAL.
14. ALL WALL-MOUNTED EQUIPMENT ENCLOSURES SHALL BE MOUNTED ON WOODEN MOUNTING BOARDS.
15. WOODEN EQUIPMENT MOUNTING BOARDS SHALL BE PLYWOOD, EXTERIOR TYPE, 3/4 INCH MINIMUM THICKNESS, BOTH SIDES PAINTED WITH ONE COAT OF PRIMER AND TWO COATS OF GRAY, OIL-BASED PAINT.
16. RIGID STEEL CONDUIT SHALL BE USED WHEN INSTALLING VAULT/SHED EQUIPMENT UNLESS OTHERWISE SPECIFIED. THE MINIMUM TRADE SIZE SHALL BE 3/4 INCH.
17. UNLESS OTHERWISE SHOWN, ALL EXPOSED CONDUITS SHALL BE RUN PARALLEL TO OR AT RIGHT ANGLES WITH THE LINES OF THE STRUCTURE.
18. ALL STEEL CONDUITS, FITTINGS, NUTS, BOLTS, ETC. SHALL BE GALVANIZED, UNLESS OTHERWISE NOTICE.
19. USE CONDUIT BUSHINGS AT EACH CONDUIT TERMINATION. WHERE NO. 4 AWG OR LARGER UNGROUNDED WIRE IS INSTALLED, USE INSULATED BUSHINGS.
20. USE DOUBLE LOCK NUTS AT EACH CONDUIT TERMINATION.
21. WRAP ALL PRIMARY AND SECONDARY POWER TRANSFORMER CONNECTIONS WITH SUFFICIENT LAYERS OF INSULATING TAPE AND COVER WITH INSULATING VARNISH FOR FULL VALUE OF CABLE INSULATION VOLTAGE.
22. UNLESS OTHERWISE NOTED, ALL INDOOR SINGLE CONDUCTOR CONTROL WIRING SHALL BE NO. 12 AWG.
23. BOTH ENDS OF EACH CONTROL CONDUCTOR SHALL BE TERMINATED AT A TERMINAL BLOCK. THE TERMINAL BLOCKS SHALL BE OF PROPER RATING AND SIZE FOR THE FUNCTION INTENDED AND THEY SHALL BE LOCATED IN EQUIPMENT ENCLOSURES OR SPECIAL TERMINAL CABINETS.
24. ALL CONTROL CONDUCTOR TERMINATIONS SHALL BE OF THE OPEN-EYE CONNECTOR/SCREW TYPE. SOLDERED, CLOSED-EYE TERMINATIONS, OR TERMINATIONS WITHOUT CONNECTORS, ARE NOT ACCEPTABLE.
25. IN TERMINAL BLOCK CABINETS, THE MINIMUM SPACING BETWEEN PARALLEL TERMINAL BLOCKS SHALL BE SIX INCHES. THE MINIMUM SPACING BETWEEN TERMINAL BLOCK SIDES/ENDS AND CABINET SIDES/BOTTOM/TOP SHALL BE FIVE INCHES. THE MINIMUM SPACING WILL BE INCREASED AS REQUIRED BY THE NUMBER OF CONDUCTORS. ADDITIONAL SPACING SHALL BE PROVIDED AT CONDUCTOR ENTRANCES.
26. BOTH ENDS OF ALL CONTROL CONDUCTORS SHALL BE IDENTIFIED AS TO THE CIRCUIT, TERMINAL BLOCK AND TERMINAL NUMBER. ONLY STICK-ON LABELS SHALL BE USED.
27. A SEPARATE AND CONTINUOUS NEUTRAL CONDUCTOR SHALL BE INSTALLED AND CONNECTED FOR EACH BREAKER CIRCUIT IN THE POWER PANEL(S) FROM THE NEUTRAL BAR TO EACH POWER/CONTROL CIRCUIT.

C. FIELD LIGHTING

1. UNLESS OTHERWISE NOTED, ALL UNDERGROUND FIELD POWER MULTIPLE AND SERIES CIRCUIT CONDUCTORS, SHALL BE FAA APPROVED. INSULATION VOLTAGE AND SIZE SHALL BE 5KV, 1/C, NO. 8 GA. UNLESS OTHERWISE APPROVED BY THE CONTRACTING OFFICER.
2. NO COMPONENTS OF PRIMARY CIRCUIT, SUCH AS CABLE, CONNECTORS AND TRANSFORMERS, SHALL BE BROUGHT ABOVE GROUND AT ANY LIGHT FIXTURES.
3. A SLACK OF FIVE FEET PER SIDE MINIMUM SHALL BE PROVIDED IN THE PRIMARY CABLE AT EACH TRANSFORMER/CONNECTOR TERMINATION.
4. BASE MOUNTED BREAKABLE COUPLINGS SHALL NOT HAVE WEEP HOLES TO THE OUTSIDE. PLUGGED UP HOLES SHALL NOT BE ACCEPTABLE. IT SHALL HAVE A 1/4" DIAMETER MINIMUM OR EQUIVALENT OPENING FOR DRAINAGE FROM THE SPACE AROUND THE SECONDARY CONNECTOR INTO THE L-867 BASE.
5. THE ELEVATION OF THE BREAKABLE COUPLING GROOVE SHALL NOT EXCEED 1-1/2" ABOVE THE EDGE OF THE COVER IN CASE OF BASE MOUNTED COUPLINGS OR THE TOP OF THE STAKE IN CASE OF STAKE MOUNTED COUPLINGS.
6. WHERE THE BREAKABLE COUPLING IS NOT AN INTEGRAL PART OF THE LIGHT FIXTURE STEM OR MOUNTING LEG, A BEAD OF SILICON SEALANT SHALL BE APPLIED COMPLETELY AROUND LIGHT STEM OR WIRE WAY AT BREAKABLE COUPLING TO PROVIDE A WATER-TIGHT SEAL.
7. PLASTIC LIGHTING FIXTURE COMPONENTS SUCH AS LAMP HEADS, STEMS, BREAKABLE COUPLINGS, BASE COVERS, BRACKETS OR STAKES SHALL NOT BE ACCEPTABLE.
8. APPLY AN OXIDE INHIBITING, ANTI-SEIZING COMPOUND TO ALL SCREWS, NUTS AND BREAKAGE COUPLING THREADS.
9. ENTRANCES INTO L-867 BASES SHALL BE PLUGGED FROM THE INSIDE WITH DUCT SEAL.
10. GALVANIZED/PAINTED EQUIPMENT/COMPONENT SURFACES SHALL NOT BE DAMAGED BY DRILLING, FILING, ETC. DRAIN HOLES IN METAL TRANSFORMER HOUSINGS SHALL BE MADE BEFORE GALVANIZING.
11. EDGE LIGHT NUMBERING TAGS SHALL BE FACING THE PAVEMENT.
12. CABLE/SPLICE/DUCT MARKERS SHALL BE PRE-CAST CONCRETE OF THE SIZE SHOWN. LETTERS/NUMBERS/ARROWS FOR THE LEGEND TO BE IMPRESSED INTO THE TOPS OF THE MARKERS SHALL BE PRE-ASSEMBLED AND SECURED IN THE MOLD BEFORE THE CONCRETE IS POURED. LEGEND INSCRIBED BY HAND IN WET CONCRETE SHALL NOT BE ACCEPTABLE.
13. ALL UNDERGROUND CABLE RUNS SHALL BE IDENTIFIED BY CABLE MARKERS AT 200 FEET MAXIMUM SPACING WITH AN ADDITIONAL MARKER AT EACH CHANGE OF DIRECTION OF THE CABLE RUN. ARROWS INDICATING CABLE DIRECTION SHALL BE IMPRESSED IN THE CONCRETE FOR EACH CABLE MARKER. CABLE MARKERS SHALL BE INSTALLED IMMEDIATELY ABOVE THE CABLE.
14. ALL SPLICING/CONNECTIONS SHALL BE DONE IN HANDHOLE/JUNCTION CANS UNLESS OTHERWISE NOTED.
15. THE CABLE AND SPLICE MARKERS SHALL IDENTIFY THE CIRCUITS WHICH THE CABLES BELONG TO.
16. LOCATIONS OF ENDS OF ALL UNDERGROUND DUCTS SHALL BE IDENTIFIED BY DUCT MARKERS.
17. ALL POWER AND CONTROL CABLES IN HANDHOLES/JUNCTION CANS SHALL BE TAGGED. USE EMBOSSED COPPER STRIPS TO BE ATTACHED AT BOTH ENDS TO THE CABLE BY THE USE OF PLASTIC STRAPS. MINIMUM OF TWO TAGS SHALL BE PROVIDED ON EACH CABLE IN A HANDHOLE/JUNCTION CANS – ONE AT THE CABLE ENTRANCE AND ONE AT THE CABLE EXIT.
18. THERE SHALL BE NO SPLICES BETWEEN THE ISOLATION TRANSFORMERS. L-823 CONNECTORS ARE ALLOWED AT TRANSFORMER CONNECTIONS ONLY UNLESS OTHERWISE SHOWN.
19. SPLICES IN SERIES CIRCUIT HOMERUNS SHALL BE OF THE L-823 TYPE. SPLICES IN MULTIPLE CIRCUIT HOMERUNS SHALL BE OF THE CAST TYPE.
20. CONCRETE USED FOR SLABS, FOOTINGS, BACKFILL AROUND TRANSFORMER HOUSINGS, MARKERS, ETC. SHALL BE 4000 PSI MINIMUM, AIR-ENTRAINED.

D. GROUNDING

VAULT/SHED

1. GROUND ALL NON-CURRENT CARRYING METAL PARTS OF ELECTRICAL EQUIPMENT BY USING NO. 6 AWG BARE COPPER WIRE TO BE RUN INSIDE CABINETS AND IN CONDUITS TOGETHER WITH OTHER WIRES AS NECESSARY. WHERE THIS IS NOT FEASIBLE, RUN THE EXPOSED GROUNDING WIRE PARALLEL OR AT RIGHT ANGLES TO THE BUILDING LINES AND SECURE IT AT LEAST EVERY 24 INCHES AND WITHIN SIX INCHES FROM BEND OR JUNCTION. THE EXPOSED WIRE MAY BE NO. 6 AWG IF IT IS NOT SUBJECTED TO PHYSICAL ABUSE. OTHERWISE, NO. 4 AWG SHALL BE USED.
2. ALL GROUND CONNECTIONS TO GROUND RODS, BUSSES, PANELS, ETC. SHALL BE MADE WITH PRESSURE TYPE SOLDERLESS LUGS AND GROUND CLAMPS. SOLDERED OR BOLT AND WASHER TYPE CONNECTIONS ARE NOT ACCEPTABLE. CLEAN ALL METAL SURFACES BEFORE MAKING GROUND CONNECTIONS.
3. TOPS OF GROUND RODS SHALL BE 10 INCHES BELOW GRADE.

AIRFIELD AREA

1. A STRANDED BARE COPPER WIRE NO. 6 AWG SHALL BE INSTALLED FOR LIGHTNING PROTECTION OF THE UNDERGROUND CABLES. THE INSULATED CABLES FOR THE APRON EDGE AND HELIPAD CIRCUITS SHALL BE PROTECTED BY A BARE COUNTERPOISE WIRE INSTALLED AS PER FAA ADVISORY CIRCULAR 150/5340-30F FOR THE ENTIRE LENGTH OF CABLES.
2. DRIVE A 3/4" DIAMETER COPPER CLAD GROUND ROD TO A DEPTH OF TEN FEET AT 500' MAX SPACING. ALL GROUND RODS SHALL BE FURNISHED AND INSTALLED INCIDENTAL TO THE COUNTERPOISE WIRE INCLUDING ALL REQUIRED CONNECTIONS.
3. THE COUNTERPOISE SYSTEM SHALL TERMINATE AT A GROUND ROD OUTSIDE THE TRANSFORMER VAULT. THIS GROUND ROD SHALL BE SECURELY ATTACHED TO THE VAULT BUILDING COUNTERPOISE. THE CONNECTIONS SHALL BE MADE BY COMPRESSION SLEEVE SPLICES AND GROUND ROD CLAMPS.
4. WHERE CONDUCTORS ARE SHOWN ON THE PLANS IN THE SAME GENERAL AREA, THEY SHALL BE RUN IN A COMMON TRENCH. PROVIDE ONLY ONE (1) #6 BARE COPPER COUNTERPOISE CONDUCTOR IN TRENCH THAT MAY CONTAIN MULTIPLE SERIES CIRCUIT CONDUCTORS.

E. TESTING

1. THE CONTRACTOR SHALL FURNISH ALL NECESSARY EQUIPMENT AND APPLIANCES FOR TESTING THE UNDERGROUND CABLE CIRCUITS AFTER INSTALLATION. THE CONTRACTOR SHALL TEST AND DEMONSTRATE TO THE SATISFACTION OF THE CONTRACTING OFFICER THE FOLLOWING:
   A. THAT ALL LIGHTING, POWER AND CONTROL CIRCUITS ARE CONTINUOUS AND FREE FROM SHORT CIRCUITS.
   B. THAT ALL CIRCUITS ARE FREE FROM UNSPECIFIED GROUNDS.
   C. THAT THE INSULATION RESISTANCE TO GROUND OF ALL NON-GROUNDED SERIES CIRCUITS IS NOT LESS THAN RECORDED FOR THE CIRCUIT PRIOR TO SPLICING IN NEW CABLE SECTION(S) AND THAT THE INSULATION RESISTANCE TO GROUND OF ALL NEW UNGROUNDED SERIES CIRCUITS IS NOT LESS THAN 50 MEGOHMS.
   D. THAT THE INSULATION RESISTANCE TO GROUND OF ALL NON-GROUNDED CONDUCTORS OF MULTIPLE CIRCUITS IS NOT LESS THAN RECORDED FOR THE CIRCUIT PRIOR TO SPLICING IN NEW CABLE SECTION(S) AND THAT THE INSULATION RESISTANCE TO GROUND OF ALL NEW UNGROUNDED SERIES CIRCUITS IS NOT LESS THAN 50 MEGOHMS.
   E. THAT ALL CIRCUITS ARE PROPERLY CONNECTED IN ACCORDANCE WITH APPLICABLE WIRING DIAGRAMS.
   F. THAT ALL CIRCUITS ARE OPERABLE. TESTS SHALL BE CONDUCTED THAT INCLUDE OPERATING EACH CONTROL NOT LESS THAN 10 TIMES AND THE CONTINUOUS OPERATION OF EACH LIGHTING AND POWER CIRCUIT FOR NOT LESS THAN 1/2 HOUR.
   G. THAT THE RESISTANCE TO GROUND OF ANY COUNTERPOISE SYSTEM OR GROUND ROD SYSTEM DOES NOT EXCEED 25 OHMS PER GROUND ROD AND/OR 10 OHMS ON THE ENTIRE FLOATING GROUND SYSTEM.
   H. CONTRACTOR SHALL RECORD THE INSULATION RESISTANCE TO GROUND OF NON-GROUNDED SERIES CIRCUITS PRIOR SPLICING IN NEW CABLE SECTIONS.

CIRCUIT LEGEND

CKT-AEL = CIRCUIT APRON EDGE LIGHT

SYMBOL LEGEND

10' X 3/4" DIA. STATIC GROUNDING ROD
10' X 3/4" DIA. GROUNDING ROD
NEW WORK KEYWORK NUMBER
L-852 OR L-862 FIXTURE LIGHTS AS INDICATED ON DRAWINGS
L-861 LED FIXTURE LIGHT ON A L-867B
HH STANDARD ELECTRICAL HANDHOLE (TRAFFIC/AIRFIELD)
DEMOLITION OF UNDERGROUND ELECTRICAL LINES TRENCH
--- UGE --- UNDERGROUND ELECTRICAL LINES IN DUCTBANK REFER TO 1/E501
UNDERGROUND ELECTRICAL LINE BETWEEN LIGHT FIXTURES
#2/0 BARE STD. CU GROUNDING CONDUCTOR GROUND GRID

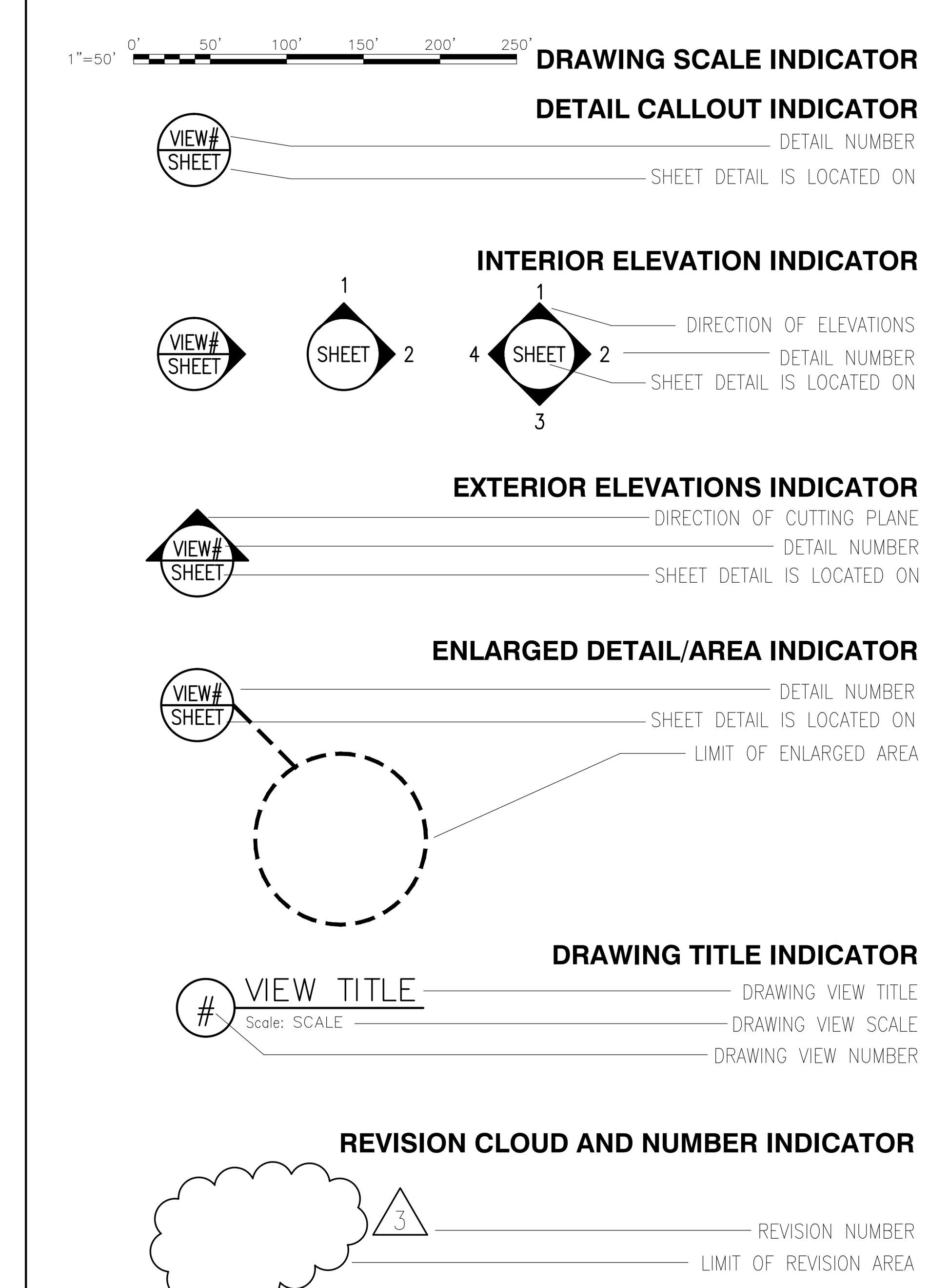

SYM | DESCRIPTION | DATE | APPR

SEAL

A/E INFO

APPROVED

FOR COMMANDER NAVFAC / B.L.T.L.

ACTIVITY
--
SATISFACTORY TO DATE --

DES RO	DRW RO	CHK RHF
PROJECT MANAGER	S. LOVE	
IPT TECH. BRANCH HEAD	J. WARD	
CHIEF ENG/ARCH (CORE)	R.H. FLORES	

DEPARTMENT OF THE NAVY
NAVAL FACILITIES ENGINEERING COMMAND
NAVAL FACILITIES ENGINEERING COMMAND SOUTHEAST
IPT SOUTH ATLANTIC NAVAL AIR STATION JACKSONVILLE
NAVAL AIR STATION JACKSONVILLE JACKSONVILLE, FLORIDA

MH-60 APRON AND REPAIRS

ELECTRICAL NOTES

SCALE: SCALE
EPROJECT NO.: 1291637
CONSTR. CONTR. NO. N69450-XX-C-XXXX
NAVFAC DRAWING NO. 15092013
SHEET 39 OF 44
E001

SUBMITTAL TITLE
SUBMITTAL DATE

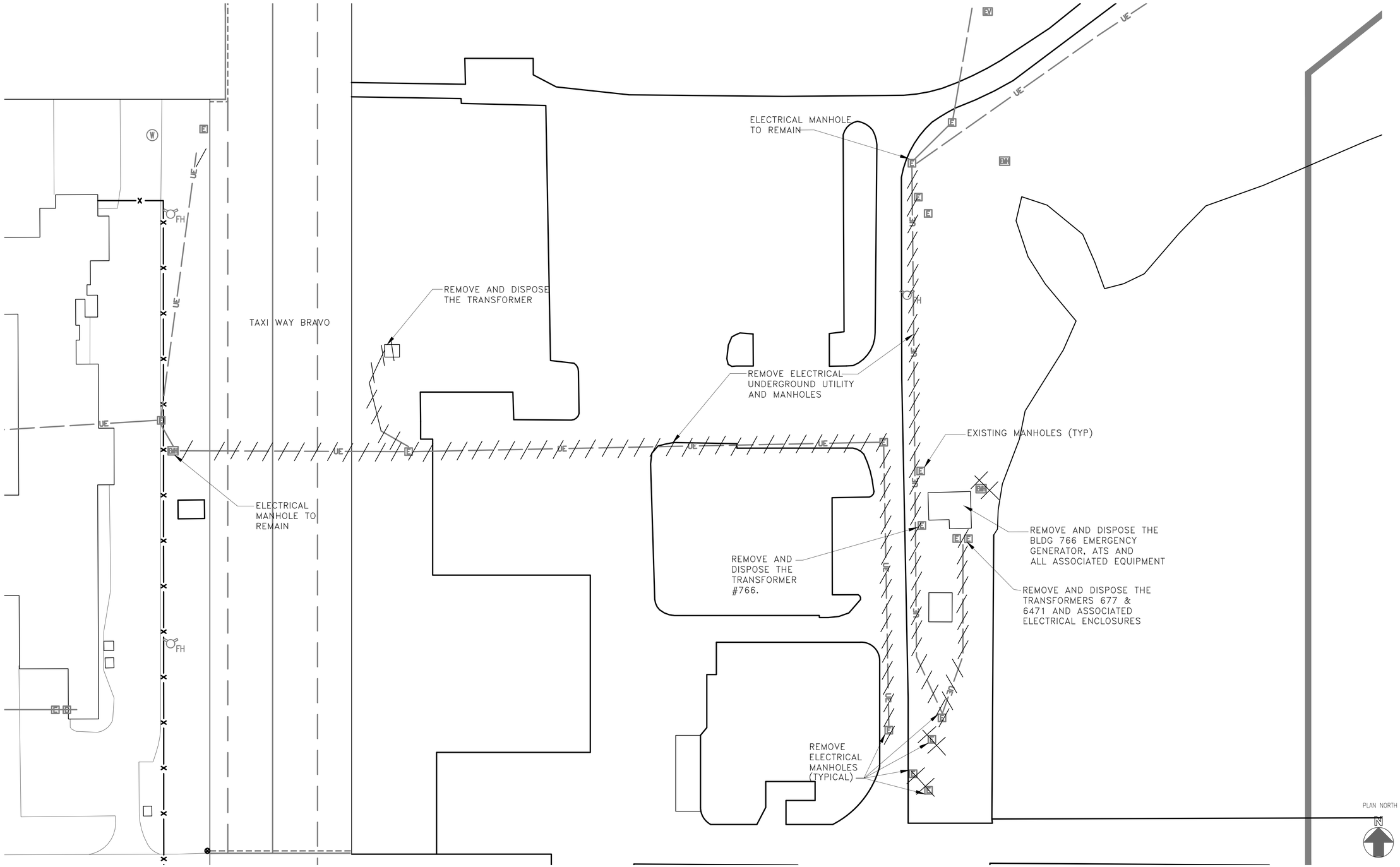

1 ELECTRICAL DEMO PLAN
Scale: 1"=40'

GRAPHIC SCALE
1"=40' 0' 40' 80' 120' 160' 200'

SYM	DESCRIPTION	DATE	APPR

NAVFAC

SEAL

A/E INFO

APPROVED

FOR COMMANDER NAVFAC / B.L.T.L.

ACTIVITY
--

SATISFACTORY TO DATE --

DES RO DRW RO CHK RHF

PROJECT MANAGER SHANA LOVE

IPT TECH. BRANCH HEAD JAMES WARD

CHIEF ENG/ARCH (CORE) R. H. FLORES

DEPARTMENT OF THE NAVY
NAVAL FACILITIES ENGINEERING COMMAND
IPT SOUTH ATLANTIC
NAVAL FACILITIES ENGINEERING COMMAND SOUTHEAST
NAVAL AIR STATION JACKSONVILLE
NAVAL AIR STATION JACKSONVILLE, FLORIDA

MH-60 APRON AND REPAIRS

ELECTRICAL DEMO PLAN

SCALE: AS INDICATED
EPROJECT NO.: 1291637
CONSTR. CONTR. NO.: N69450-XX-C-XXXX
NAVFAC DRAWING NO.: 15092014
SHEET 40 OF 44
ED101

DRAWFORM REVISION: 7 AUGUST 2009

SHEET FORMAT IS 22" X 34". IF PRINTED SHEET IS NOT 22" X 34", THEN IT IS NOT TO SCALE

FILE NAME: P:\CIBL\project_files\FLORIDA\nas jacksonville f(lh)-00207\684-mh-60 apron and repair-1291637\working technical files\Drawings\SheetED101 ELECTRICAL DEMO PLAN.dwg LAYOUT NAME: ED101 ELECTRICAL DEMO PLAN PLOTTED: Thursday, December 18, 2014 - 11:26am USER: rolando.ortiz

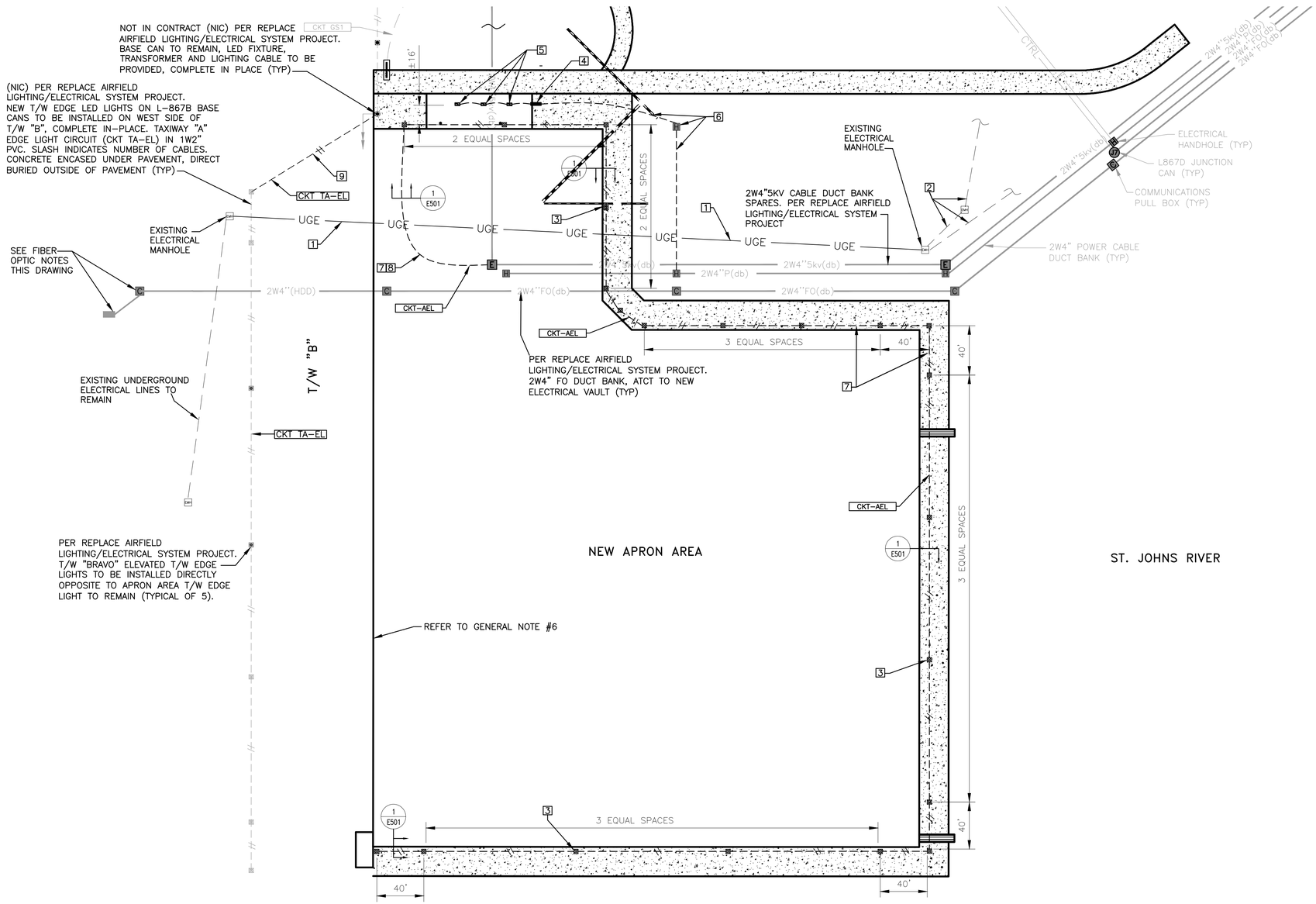

1 APRON EDGE LIGHTING PLAN
Scale: 1" = 50'

PLAN NORTH

ELECTRICAL NOTES

1. RE-ROUTE PRIMARY ELECTRICAL LINE 2-5" PVC CONDUIT IN CONCRETE ENCASED DUCT BANK. PROVIDE 3#500kCM, 133%, EPR WITH 1/3 CONCENTRIC NEUTRAL. PROVIDE LOW PROFILE PEDESTAL CABINET TO SPLICE CABLES. PEDESTAL CABINET SHALL NOT EXCEED 16 INCHES IN HEIGHT.
2. EXISTING UNDERGROUND ELECTRICAL LINES TO REMAIN.
3. NEW APRON EDGE L-861 LIGHTING IN L-867 NON-LOAD BEARING BASE CAN (TYP OF 21). REFER TO DETAIL 2/E501.
4. PROVIDE NEW CLASS 1, DIV 2 ELECTRICAL ENCLOSURE WITH A SINGLE 20A, 277V ENCLOSED CIRCUIT BREAKER. COORDINATE ELECTRICAL CONNECTION, FROM NEW AIRFIELD PROVIDE A 20A, HEAVY DUTY TOGGLE SWITCH IN A CLASS 1/ DIV 2 ENCLOSURE TO CONTROL FLOODLIGHTS. VAULT TO THIS PANELBOARD. ENCLOSURE AND SWITCH SWITCH SHALL BE LOCATED WITHIN 16 INCHES FROM GROUND LEVEL.
5. AREA FLOODLIGHTS, CLASS 1, DIV 2, HAZARDOUS LOCATIONS, 125W LED MOUNTING HEIGHT NOT TO EXCEED 3 FEET.
6. PROVIDE 2/C NO. 8 AWG 5KV CKT-AEL THROUGH NEW HANDHOLE TO SUPPLY NEW APRON EDGE PERIMETER LIGHTS. CKT-AEL SHALL HOMERUN TO NEW ELECTRICAL VAULT.
7. PROVIDE 2/C NO. 8 AWG 5KV, CKT-AEL. SLASH INDICATES NUMBER OF CABLES.
8. CKT-AEL (APRON EDGE LIGHTS) SHALL BE CONNECTED TO FUTURE CCR SWITCHGEAR #2 LOCATED INSIDE THE NEW AIRFIELD VAULT PROVIDED BY THE AIRFIELD LIGHTING/ELECTRICAL SYSTEM PROJECT. PROVIDE CONNECTION TO CCR BAY #7 UPPER SECTION. PROVIDE 3-STEP INTENSITY CONTROL. REFER TO PAGE EA435 OF THE AIRFIELD PROJECT FOR LOCATION OF NEW AIRFIELD VAULT.
9. RE-ROUTE CKT TA-EL, PROVIDED BY THE AIRFIELD PROJECT. PROVIDE COORDINATION BETWEEN BOTH PROJECT. RE-ROUTING SHALL BE THROUGH DIRECT BORING. EXCAVATION IS PROHIBITED.

GENERAL NOTES

1. REFER TO PAGE E602 OF THE REPLACE AIRFIELD LIGHTING/ELECTRICAL SYSTEM PROJECT BY URS, FOR MORE INFORMATION ON NEW CCR SWITCHGEAR.
2. REFER TO THE REPLACE AIRFIELD LIGHTING/ELECTRICAL SYSTEM PROJECT BY URS, FOR MORE INFORMATION ON THE ELECTRICAL INFRASTRUCTURE AND OVERALL INFORMATION IN THE NEW AIRFIELD VAULT.
3. CLASS 1, DIVISION 2 AREA SHALL CONSIST OF 20 FEET RADIO FROM WHERE THE FUEL PANTOGRAPH SUPPLY WILL BE LOCATED.
4. ALL LIGHTS SHALL BE CONTROLLED FROM THE CONTROL TOWER AND FROM THE LIGHTING EQUIPMENT VAULT.
5. THREE STEP INTENSITY LIGHTS SHALL BE PROVIDED PER UFC-3-535-01, AS FOLLOWS:

INTENSITY STEP	PERCENT OF FULL INTENSITY
1	10%
2	20%
3	100%

6. NOTE: COORDINATE WITH FUTURE PROJECT "REPLACE AIRFIELD LIGHTING/ELECTRICAL SYSTEM", THE DEMOLITION OF ANY FUTURE TAXI WAY LIGHTING PROVIDED THAT MAY BE IN CONFLICT WITH THIS PROJECT.

GRAPHIC SCALE

1"=50' 0' 50' 100' 150' 200' 250'

SUBMITTAL TITLE
SUBMITTAL DATE

SYM	DESCRIPTION	DATE	APPR

NAVFAC

SEAL

A/E INFO

APPROVED
FOR COMMANDER NAVFAC / B.L.T.L.
ACTIVITY --
SATISFACTORY TO DATE --
DES RO DRW RO CHK RHF
PROJECT MANAGER S. LOVE
IPT TECH. BRANCH HEAD J. WARD
CHIEF ENG/ARCH (CORE) R.H. FLORES

DEPARTMENT OF THE NAVY
NAVAL FACILITIES ENGINEERING COMMAND
IPT SOUTH ATLANTIC
NAVAL FACILITIES ENGINEERING COMMAND SOUTHEAST
NAVAL AIR STATION JACKSONVILLE
NAVAL AIR STATION JACKSONVILLE, FLORIDA
MH-60 APRON AND REPAIRS
APRON AREA POWER PLAN

SCALE: SCALE
EPROJECT NO.: 1291637
CONSTR. CONTR. NO.: N69450-XX-C-XXXX
NAVFAC DRAWING NO.: 15092015
SHEET 41 OF 44
EP101

DRAWFORM REVISION: 7 AUGUST 2009

FILE NAME: P:\CBL\project_files\FLORIDA\nas jacksonville rl(hj)-00207\684-mh-60 apron and repair-1291637\working technical files\Drawings\SheetEP101 APRON AREA POWER PLAN.dwg LAYOUT NAME: EP101 APRON AREA POWER PLAN PLOTTED: Thursday, December 18, 2014 - 11:26am USER: rolando.ortiz

SHEET FORMAT IS 22" X 34". IF PRINTED SHEET IS NOT 22" X 34", THEN IT IS NOT TO SCALE

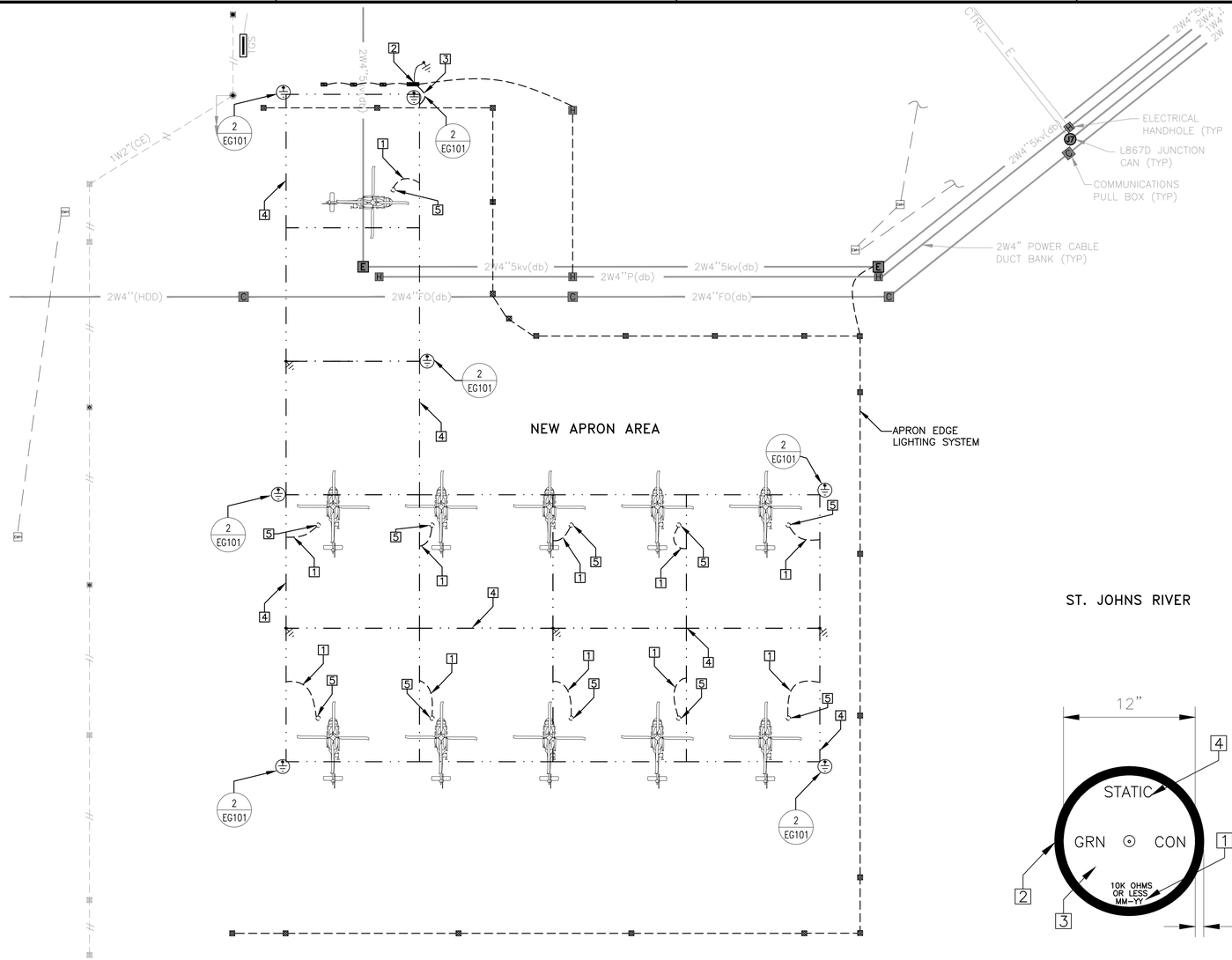

1 STATIC GROUND PLAN
Scale: 1" = 50'

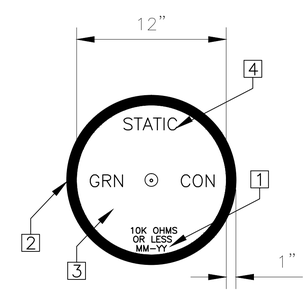

1 PROVIDE TWO DIGIT MONTH AND TWO DIGIT YEAR OF INSTALLATION

2 PROVIDE 1" OF BLACK PAINT

3 PROVIDE YELLOW COLOR PAINT

4 PROVIDE BLACK COLOR PAINT FOR ALL OF THE FONTS INSIDE THE YELLOW CIRCLE

2 STATIC GROUND DETAIL
Scale: NTS

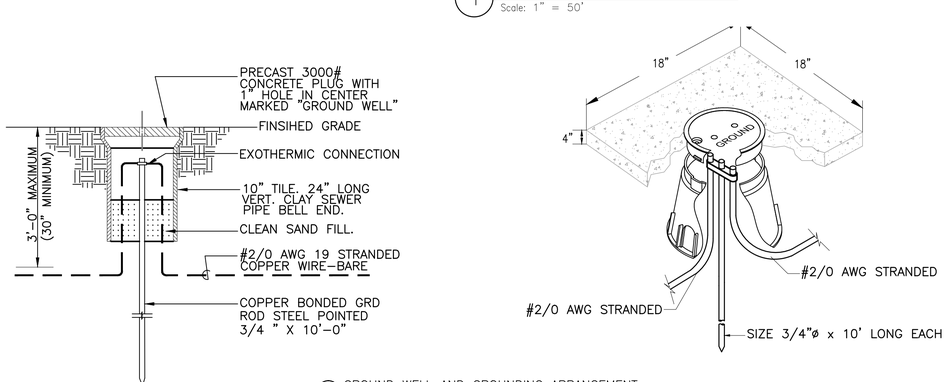

3 GROUND WELL AND GROUNDING ARRANGEMENT
Scale: NOT TO SCALE

PLAN NORTH

STATIC GROUNDING NOTES

1 #2/0 BARE STD. CU GROUND BONDING.

2 REFER TO NOTE 5 ON EP101.

3 PROVIDE GROUND BONDING WITHIN THE ELECTRICAL GROUNDING SYSTEM COMING FROM VAULT TO THE NEW GROUND GRID.

4 #2/0 BARE STD. CU GROUND GRID.

5 PROVIDE 10'x3/4" DIA. STATIC GROUNDING ROD AS INDICATED ON DRAWINGS, THEY SHALL BE LOCATED WITHIN TEN FEET (10') OF HELICOPTER PARKING AREA. PROVIDE SPACE FOR CONNECTION OF FUELING PANTOGRAPH GROUNDING CLAMP. PROVIDE YELLOW PAINT AROUND THE CENTER OF THE GROUNDING ROD, AS WELL AS IDENTIFICATION. EACH GROUNDING ROD SHALL PROVIDE 10K OHMS OR LESS. REFER TO DETAIL 2 IN THIS PAGE.

GRAPHIC SCALE

1"=50' 0' 50' 100' 150' 200' 250'

SUBMITTAL TITLE
SUBMITTAL DATE

SYM	DESCRIPTION	DATE	APPR

SEAL

A/E INFO

APPROVED
FOR COMMANDER NAVFAC / B.L.T.L.

ACTIVITY
--
SATISFACTORY TO DATE --

DES RO DRW RO CHK RHF
PROJECT MANAGER S. LOVE
IPT TECH. BRANCH HEAD J. WARD
CHIEF ENG/ARCH (CORE) R.H. FLORES

DEPARTMENT OF THE NAVY
NAVAL FACILITIES ENGINEERING COMMAND SOUTHEAST
NAVAL AIR STATION JACKSONVILLE
IPT SOUTH ATLANTIC
NAVAL FACILITIES ENGINEERING COMMAND
NAVAL AIR STATION JACKSONVILLE
JACKSONVILLE, FLORIDA
MH-60 APRON AND REPAIRS
ELECTRICAL STATIC GROUNDING PLAN

SCALE
EPROJECT NO.: 1291637
CONSTR. CONTR. NO. N69450-XX-C-XXXX
NAVFAC DRAWING NO. 15092016
SHEET 42 OF 44
EG101

DRAWFORM REVISION: 7 AUGUST 2009

FILE NAME: P:\CBL\project_files\FLORIDA\nas jacksonville f(h)\p00207\664-mh-60 apron and repair-1291637\working technical files\Drawings\Sheet EG101 ELECTRICAL STATIC GROUNDING PLAN.dwg LAYOUT NAME: EG101 ELECTRICAL STATIC GROUNDING PLAN PLOTTED: Thursday, December 18, 2014 - 11:27am USER: rolando.ortiz

SHEET FORMAT IS 22" X 34". IF PRINTED SHEET IS NOT 22" X 34", THEN IT IS NOT TO SCALE

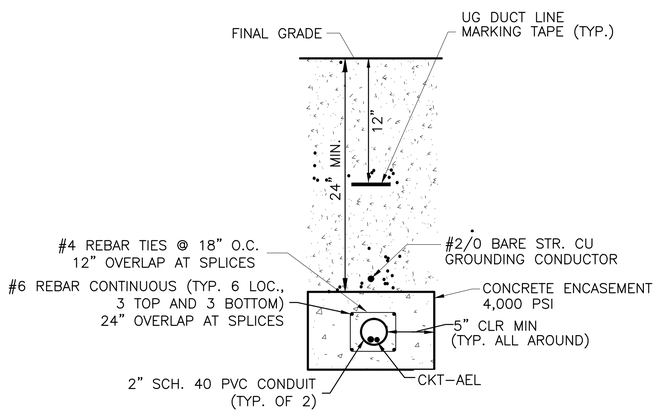

1 ELECTRICAL DUCTBANK
Scale: NTS

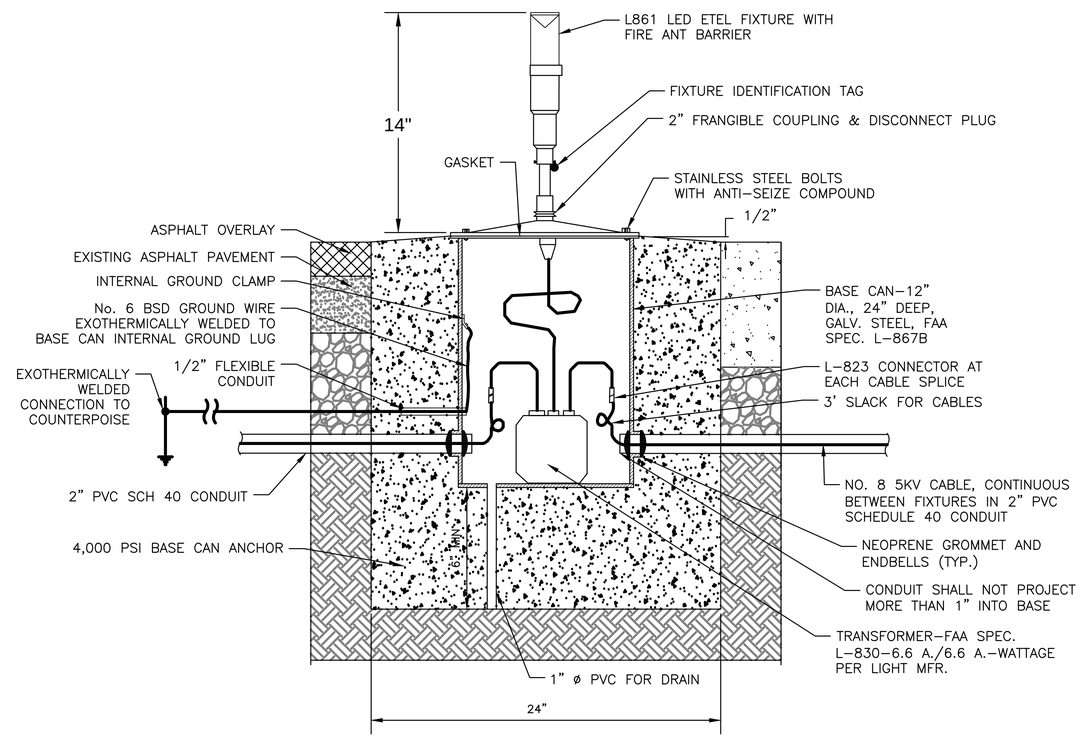

NOTES:

1. VARIOUS HOLE LOCATIONS ARE REQUIRED. BASES SHALL BE OBTAINED WITH NECESSARY HOLES MADE AT THE FACTORY PRIOR TO GALVANIZING.
2. ALL EDGE LIGHTS SHALL BE INSTALLED PER MANUFACTURER'S RECOMMENDATIONS.
3. RETURN CABLE NOT SHOWN FOR CLARITY.

2 LED TAXIWAY EDGE LIGHT BASE MOUNTED IN ASPHALT OR CONCRETE PAVEMENT
Scale: NTS

SYM	DESCRIPTION	DATE	APPR
---	---	---	---

NAVFAC

PRELIMINARY NOT FOR CONSTRUCTION

SEAL

A/E INFO

APPROVED

FOR COMMANDER NAVFAC / B.L.T.L.

ACTIVITY --

SATISFACTORY TO DATE --

DES RO | DRW RO | CHK RHF

PROJECT MANAGER S. LOVE

IPT TECH. BRANCH HEAD J. WARD

CHIEF ENG/ARCH (CORE) R.H. FLORES

DEPARTMENT OF THE NAVY
NAVAL FACILITIES ENGINEERING COMMAND
IPT SOUTH ATLANTIC
NAVAL FACILITIES ENGINEERING COMMAND SOUTHEAST
NAVAL AIR STATION JACKSONVILLE
NAVAL AIR STATION JACKSONVILLE, FLORIDA
MH-60 APRON AND REPAIRS
ELECTRICAL LIGHTING DETAIL

SCALE: SCALE

EPROJECT NO.: 1291637

CONSTR. CONTR. NO. N69450-XX-C-XXXX

NAVFAC DRAWING NO. 15092017

SHEET 43 OF 44

E501

DRAWFORM REVISION: 7 AUGUST 2009

SHEET FORMAT IS 22" X 34". IF PRINTED SHEET IS NOT 22" X 34", THEN IT IS NOT TO SCALE

FILE NAME: P:\CBL\project_files\FLORIDA\vaq jacksonville ff\hj#00207\664-mh-60 apron and repair-1291637\working technical files\Drawings\Sheet501 ELECTRICAL LIGHTING DETAIL.dwg LAYOUT NAME: E501 ELECTRICAL LIGHTING DETAIL PLOTTED: Thursday, December 18, 2014 - 11:27am USER: rolando.ortiz

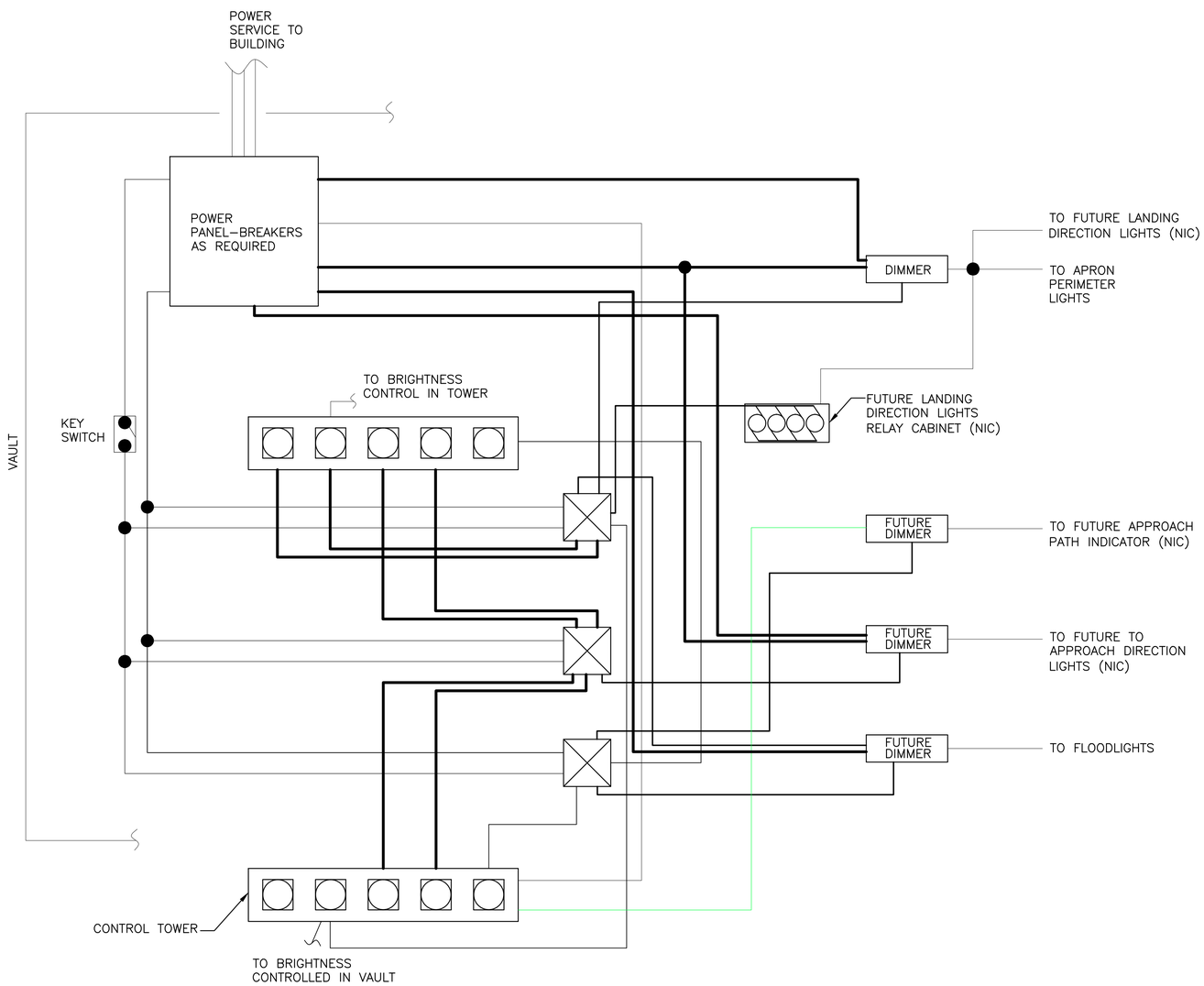

1 HELIPAD LIGHTING CONTROL DIAGRAM (TYP)
Scale: NOT TO SCALE

LEGEND

= TRANSFER RELAY CABINET

= CONTROL PANEL, BRIGHTNESS CONTROLLER

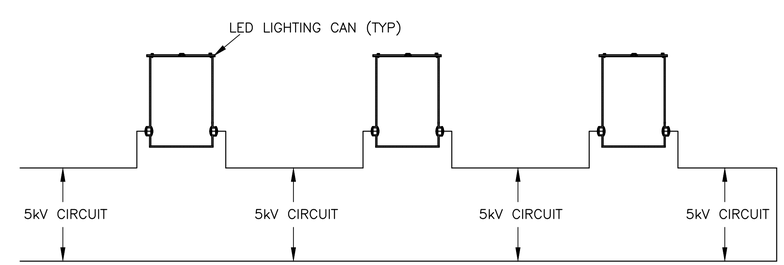

5 KV CIRCUIT SINLE LINE DIAGRAM (TYP)
NOT TO SCALE

SUBMITTAL TITLE
SUBMITTAL DATE

SYM	DESCRIPTION	DATE	APPR

NAVFAC

SEAL

A/E INFO

APPROVED
FOR COMMANDER NAVFAC / B.L.T.L.
ACTIVITY
--
SATISFACTORY TO DATE --

DES RO | DRW RO | CHK RHF
PROJECT MANAGER S. LOVE
IPT TECH. BRANCH HEAD J. WARD
CHIEF ENG/ARCH (CORE) R.H. FLORES

DEPARTMENT OF THE NAVY
NAVAL FACILITIES ENGINEERING COMMAND
IPT SOUTH ATLANTIC
NAVAL FACILITIES ENGINEERING COMMAND SOUTHEAST
NAVAL AIR STATION JACKSONVILLE
NAVAL AIR STATION JACKSONVILLE, FLORIDA
MH-60 APRON AND REPAIRS
HELIPAD LIGHTING CONTROL DIAGRAM

SCALE: SCALE
EPROJECT NO.: 1291637
CONSTR. CONTR. NO.: N69450–XX–C–XXXX
NAVFAC DRAWING NO.: 15092018
SHEET 44 OF 44
E601

DRAWFORM REVISION: 7 AUGUST 2009

SHEET FORMAT IS 22" X 34". IF PRINTED SHEET IS NOT 22" X 34", THEN IT IS NOT TO SCALE

FILE NAME: P:\CBL\project_files\FLORIDA\nas jacksonville it\hj00207\664-mh-60 apron and repair-1291637\working technical files\Drawings\Sheet601 HELIPAD LIGHTING CONTROL DIAGRAM.dwg LAYOUT NAME: E601 HELIPAD LIGHTING CONTROL DIAGRAM PLOTTED: Thursday, December 18, 2014 – 11:28am USER: rolando.ortiz