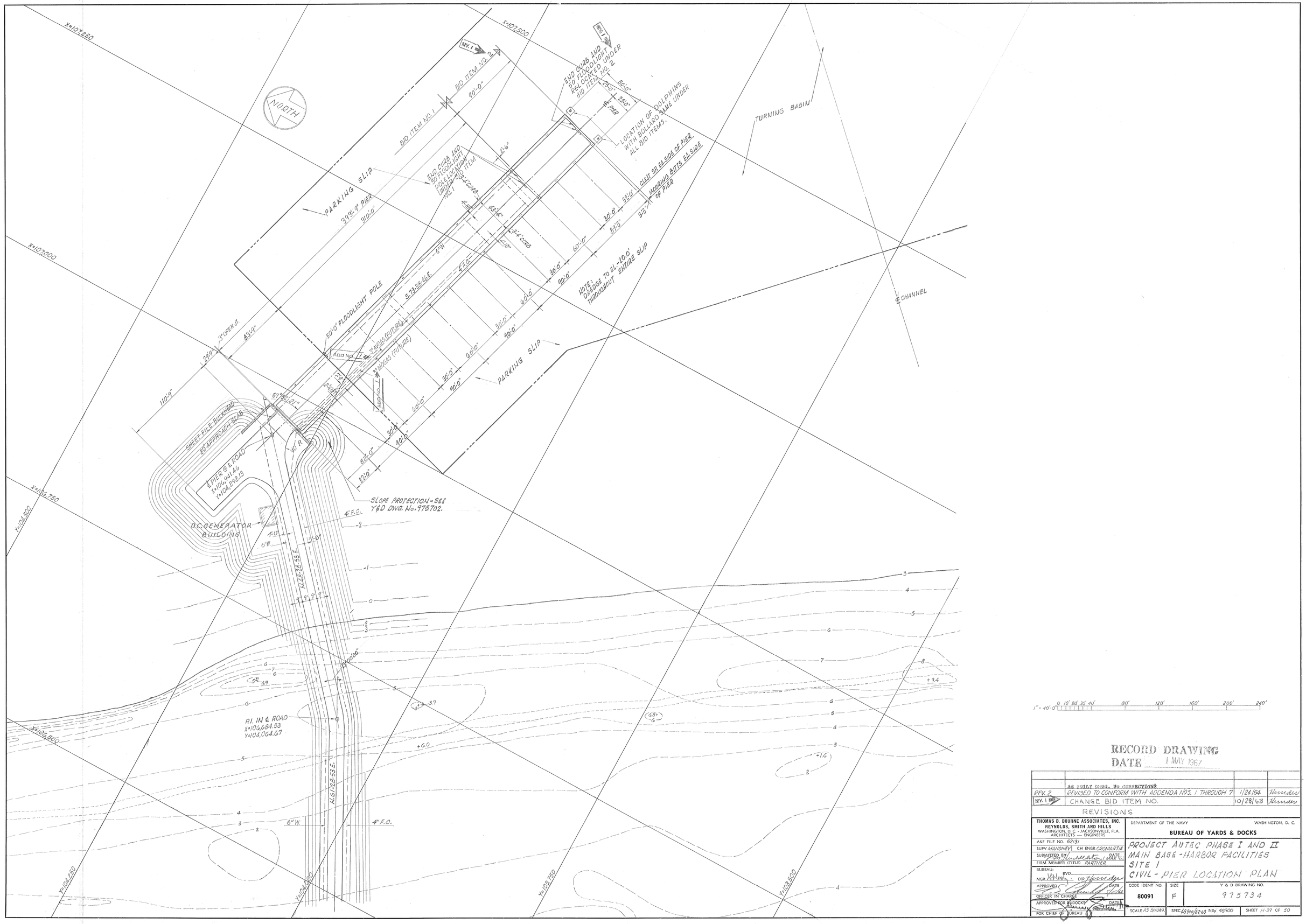

RECORD DRAWING
DATE 1 MAY 1967

	AS BUILT DWG. No CORRECTIONS		
REV. 2	REVISED TO CONFORM WITH ADDENDA NOS. 1 THROUGH 7	1/24/64	Hunder
REV. 1	CHANGE BID ITEM NO.	10/28/63	Hunder

REVISIONS

THOMAS B. BOURNE ASSOCIATES, INC.
REYNOLDS, SMITH AND HILLS
WASHINGTON, D.C. - JACKSONVILLE, FLA.
ARCHITECTS — ENGINEERS

A&E FILE NO. 62131
SUPV MAHONEY | CH ENGR CROMARTIE
SUBMITTED BY [signature] DATE 1 MAR '63
FIRM MEMBER (TITLE) PARTNER
BUREAU: MGR. [signature] RVD. DIR. [signature]
APPROVED [signature] DATE 5/10/63
OFFICER IN CHARGE
APPROVED FOR BUDOCKS [signature] DATE
FOR CHIEF OF BUREAU

DEPARTMENT OF THE NAVY — WASHINGTON, D. C.
BUREAU OF YARDS & DOCKS

PROJECT AUTEC PHASE I AND II
MAIN BASE - HARBOR FACILITIES
SITE 1
CIVIL - PIER LOCATION PLAN

CODE IDENT NO.	SIZE	Y & D DRAWING NO.
80091	F	975734

SCALE AS SHOWN | SPEC 48900/62-63 NBy 48900 | SHEET H-39 OF 50

52

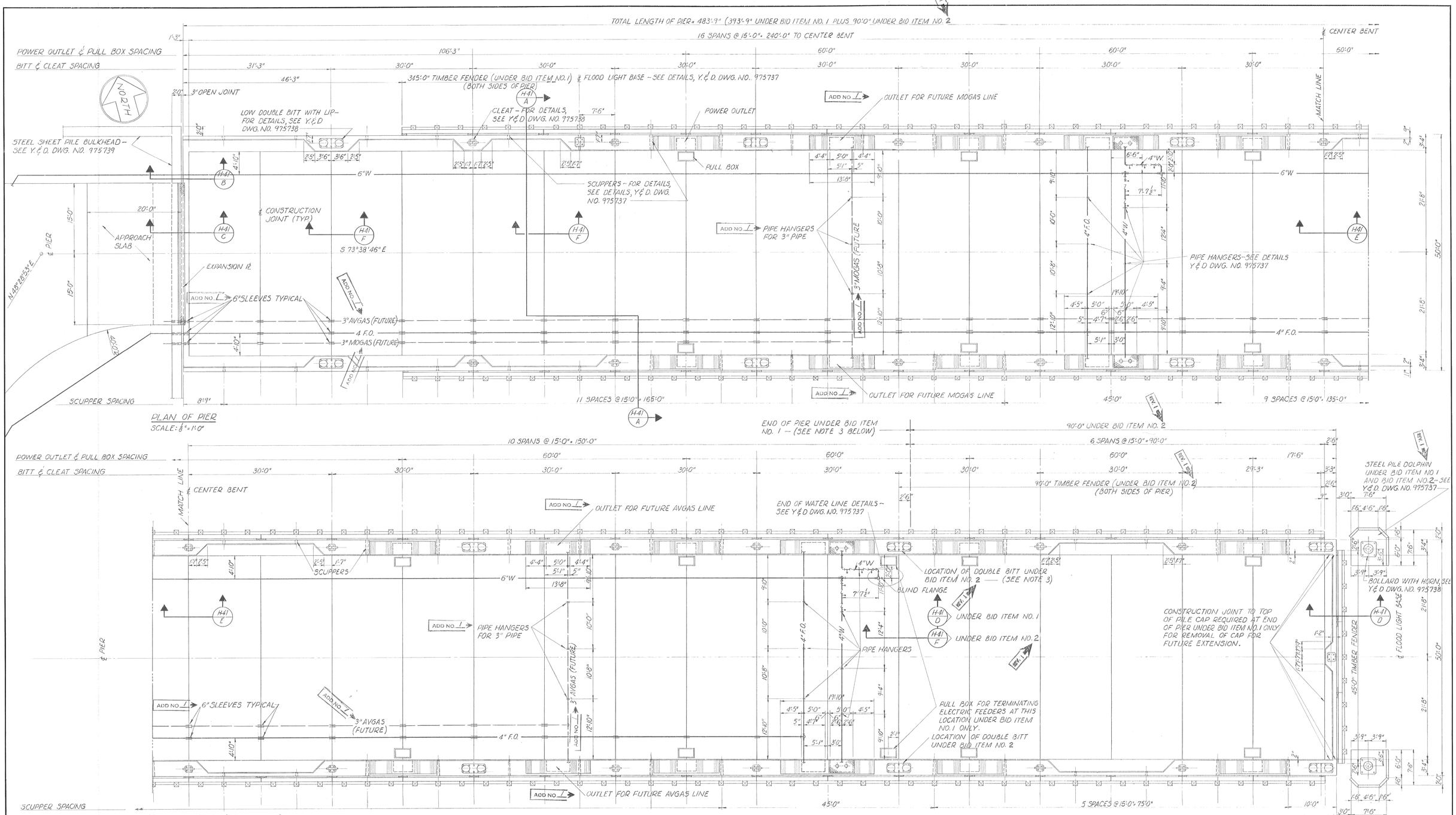

GENERAL NOTES

CONCRETE:
CONCRETE FOR THE VARIOUS PARTS OF THE PIER SHALL BE AS FOLLOWS:
TRANSVERSE & LONGITUDINAL PILE CAPS & DOLPHINS — CLASS E-1.

6" DECK, DIAPHRAGMS & PILE ENCASEMENT — CLASS E-1.
PRECAST CHANNEL BEAMS — CLASS E-1.
PRESTRESSED DOUBLE TEES — CLASS H-1.

MINIMUM COVER FOR REINFORCING STEEL
PILE ENCASEMENT, PILE CAPS, DOLPHINS: 4" BOTTOM & SIDES, 3" TOP
CURBS: 4" OUTBOARD, 2" TOP & INBOARD
6" DECK: 1½" TOP, 1" BOTTOM
DIAPHRAGMS: 2"

REINFORCING STEEL
MINIMUM LAP: 24 DIAMETERS
MINIMUM PENETRATION FOR DOWELS: 24 DIAMETERS

DESIGN LOAD FOR PILES 12 BP53: 60 TONS

WELDING: WELDING SHALL BE IN ACCORDANCE WITH THE APPLICABLE REQUIREMENTS OF SPECIFICATIONS 22YE AND THE BEST WELDING PRACTICE.

12 BP53 PILE ENCASEMENTS: 2'-6" DIAMETER ENCASEMENTS MAY BE SUBSTITUTED FOR THE 2'-2" SQUARE ENCASEMENTS SHOWN.

CHAMFER: ALL EDGES TO HAVE ¾" CHAMFER UNLESS OTHERWISE NOTED.

GALVANIZING: ALL GALVANIZING SHALL BE IN ACCORDANCE WITH A.S.T.M DESIGNATION A153-53.

NOTES:
1. FOR DETAILS OF DIESEL FUEL OUTLETS AND FRESH WATER OUTLETS, SEE Y. & D. DWG. NO. 975737.
2. FOR DETAILS OF POWER OUTLETS, SEE Y. & D DWG. NO. 975738.
FOR DETAILS OF ELECTRIC SYSTEM, SEE Y. & D DWG. NO. 975909.
3. END OF PIER UNDER BID ITEM NO. 1 SAME AS END OF PIER UNDER BID ITEM NO. 2 (AS SHOWN ON PLAN ABOVE) INCLUDING LOCATION OF DOUBLE BITTS. REV. 1
4. FOR DETAILS OF TIMBER FENDER, SEE SECTION (H-41/A) AND VIEW (H-41/A).
5. FOR DETAILS OF MOGAS AND AVGAS OUTLET BOXES, SEE Y & D DWG. NO. 975913. ADD NO. 1
6. ALL PIPE SLEEVES SHALL BE CUT AND HOT-DIP GALVANIZED AFTER FABRICATION. ADD NO. 1

RECORD DRAWING
DATE 1 MAY 1967

DESIGN LOADING FOR PIER
LIVE LOAD: A.A.S.H.O. H-15 PLUS 15% IMPACT OR 400 LBS. PER SQ. FT.
HORIZONTAL LOAD: 1,200 LBS. PER LINEAR FOOT ABOVE EL. 0.0.

	AS BUILT DWG. NO CORRECTIONS		
REV. 2	REVISED TO CONFORM WITH ADDENDA NOS. 1 THROUGH 7	1/24/64	Hunter
REV. 1	CHANGE BID ITEM NO.	10/28/63	Hunter

REVISIONS

THOMAS B. BOURNE ASSOCIATES, INC.
REYNOLDS, SMITH AND HILLS
WASHINGTON, D.C. - JACKSONVILLE, FLA.
ARCHITECTS — ENGINEERS

A&E FILE NO. 62131
SUPV MAHONEY | CH ENGR CROMARTIE
SUBMITTED BY Hunter DATE 1/24/64
FIRM MEMBER (TITLE) PARTNER
BUREAU:
MGR McNeely RVD
DIR Hunter
APPROVED DATE
OFFICER IN CHARGE
APPROVED FOR BUDOCKS DATE 5/13/65
FOR CHIEF OF BUREAU

DEPARTMENT OF THE NAVY — WASHINGTON, D. C.
BUREAU OF YARDS & DOCKS

PROJECT AUTEC PHASE I AND II
MAIN BASE - HARBOR FACILITIES
SITE 1
CIVIL - PIER PLAN

CODE IDENT NO.	SIZE	Y & D DRAWING NO.
80091	F	975735
SCALE AS SHOWN	SPEC 48700/6263 NBy 48900	SHEET H-40 OF 50

CIV

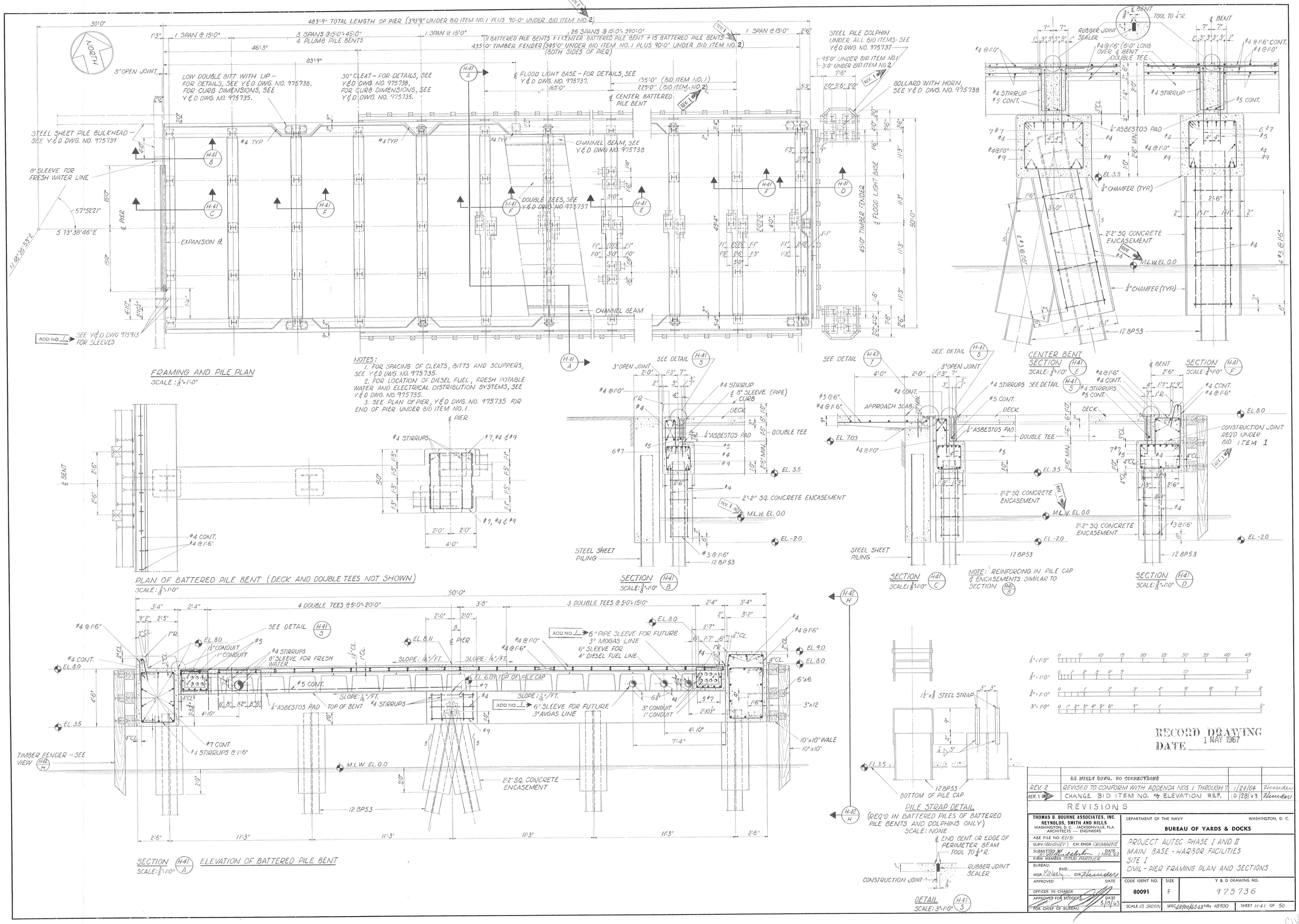

483'-9" TOTAL LENGTH OF PIER (393'-9" UNDER BID ITEM NO. 1 PLUS 90'-0" UNDER BID ITEM NO. 2)
1 SPAN @ 15'-0"
3 SPANS @ 15'-0" = 45'-0"
4 PLUMB PILE BENTS
26 SPANS @ 15'-0" = 390'-0"
11 BATTERED PILE BENTS + 1 CENTER BATTERED PILE BENT + 15 BATTERED PILE BENTS
435'-0" TIMBER FENDER (345'-0" UNDER BID ITEM NO. 1 PLUS 90'-0" UNDER BID ITEM NO. 2)
(BOTH SIDES OF PIER)
STEEL PILE DOLPHIN UNDER ALL BID ITEMS - SEE Y&D DWG. NO. 975737
93'-0" UNDER BID ITEM NO. 1
3'-0" UNDER BID ITEM NO. 2
BOLLARD WITH HORN, SEE Y&D DWG. NO. 975738
LOW DOUBLE BITT WITH LIP - FOR DETAILS, SEE Y&D DWG. NO. 975738. FOR CURB DIMENSIONS, SEE Y&D DWG. NO. 975735.
30" CLEAT - FOR DETAILS, SEE Y&D DWG. NO. 975738. FOR CURB DIMENSIONS, SEE Y&D DWG. NO. 975735.
℄ FLOOD LIGHT BASE - FOR DETAILS, SEE Y&D DWG. NO. 975737.
℄ CENTER BATTERED PILE BENT
STEEL SHEET PILE BULKHEAD - SEE Y&D DWG. NO. 975739
8" SLEEVE FOR FRESH WATER LINE
CHANNEL BEAM, SEE Y&D DWG. NO. 975738
DOUBLE TEES, SEE Y&D DWG. NO. 975737
EXPANSION ℞
CHANNEL BEAM
45'-0" TIMBER FENDER
℄ FLOOD LIGHT BASE
SEE Y&D DWG 975913 FOR SLEEVES
ADD NO. 1
FRAMING AND PILE PLAN
SCALE: 1/8" = 1'-0"
NOTES:
1. FOR SPACING OF CLEATS, BITTS AND SCUPPERS, SEE Y&D DWG. NO. 975735.
2. FOR LOCATION OF DIESEL FUEL, FRESH POTABLE WATER AND ELECTRICAL DISTRIBUTION SYSTEMS, SEE Y&D DWG. NO. 975735.
3. SEE PLAN OF PIER, Y&D DWG. NO. 975735 FOR END OF PIER UNDER BID ITEM NO. 1.
PLAN OF BATTERED PILE BENT (DECK AND DOUBLE TEES NOT SHOWN)
SCALE: 3/8" = 1'-0"
SECTION H-41 B
SCALE: 3/8" = 1'-0"
SECTION H-41 C
SCALE: 3/8" = 1'-0"
NOTE: REINFORCING IN PILE CAP & ENCASEMENTS SIMILAR TO SECTION H-41 B
SECTION H-41 D
SCALE: 3/8" = 1'-0"
CENTER BENT SECTION H-41 E
SCALE: 3/4" = 1'-0"
SECTION H-41 F
SCALE: 3/4" = 1'-0"
CONSTRUCTION JOINT REQ'D UNDER BID ITEM 1
SECTION H-41 A
SCALE: 3/8" = 1'-0"
ELEVATION OF BATTERED PILE BENT
4 DOUBLE TEES @ 5'-0" = 20'-0"
3 DOUBLE TEES @ 5'-0" = 15'-0"
6" PIPE SLEEVE FOR FUTURE 3" MOGAS LINE
6" SLEEVE FOR 4" DIESEL FUEL LINE
6" SLEEVE FOR FUTURE 3" AVGAS LINE
TIMBER FENDER - SEE VIEW H-42 H
PILE STRAP DETAIL
(REQ'D IN BATTERED PILES OF BATTERED PILE BENTS AND DOLPHINS ONLY)
SCALE: NONE
DETAIL H-41 S
SCALE: 3" = 1'-0"
RECORD DRAWING
DATE 1 MAY 1967
AS BUILT DWG. NO CORRECTIONS
REV. 2 REVISED TO CONFORM WITH ADDENDA NOS. 1 THROUGH 7 1/24/64
REV. 1 CHANGE BID ITEM NO. & ELEVATION REF. 10/28/63
REVISIONS
THOMAS B. BOURNE ASSOCIATES, INC.
REYNOLDS, SMITH AND HILLS
WASHINGTON, D.C. - JACKSONVILLE, FLA.
ARCHITECTS — ENGINEERS
A&E FILE NO. 62131
SUPV MAHONEY CH ENGR CROMARTIE
SUBMITTED BY DATE 1 MAR. 63
FIRM MEMBER (TITLE) PARTNER
BUREAU:
MGR. RVD. DIR.
APPROVED DATE
OFFICER IN CHARGE
APPROVED FOR BUDOCKS DATE 5/13/63
FOR CHIEF OF BUREAU
DEPARTMENT OF THE NAVY WASHINGTON, D. C.
BUREAU OF YARDS & DOCKS
PROJECT AUTEC PHASE I AND II
MAIN BASE - HARBOR FACILITIES
SITE I
CIVIL - PIER FRAMING PLAN AND SECTIONS
CODE IDENT NO. 80091
SIZE F
Y & D DRAWING NO. 975736
SCALE AS SHOWN
SPEC 48900/62-63 NBy 48900
SHEET H-41 OF 50

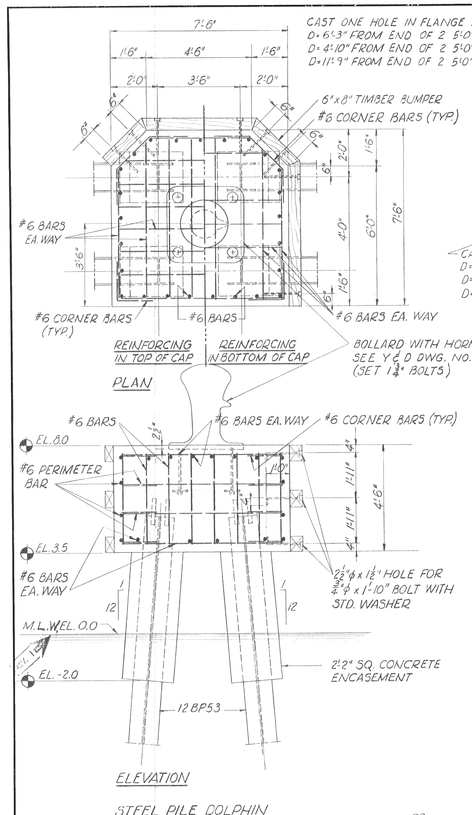

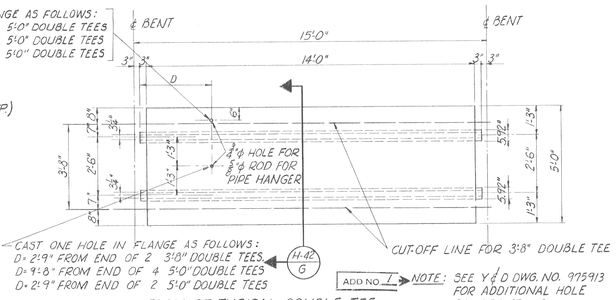

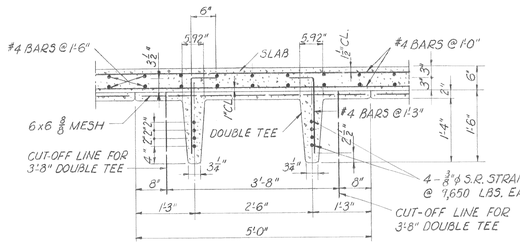

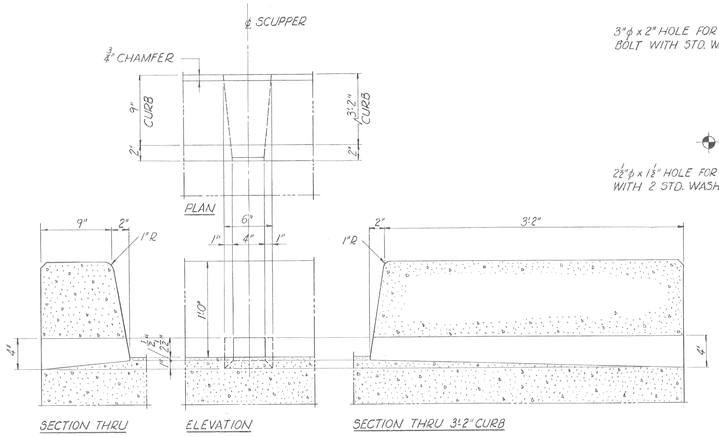

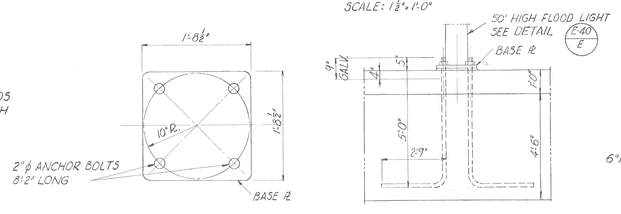

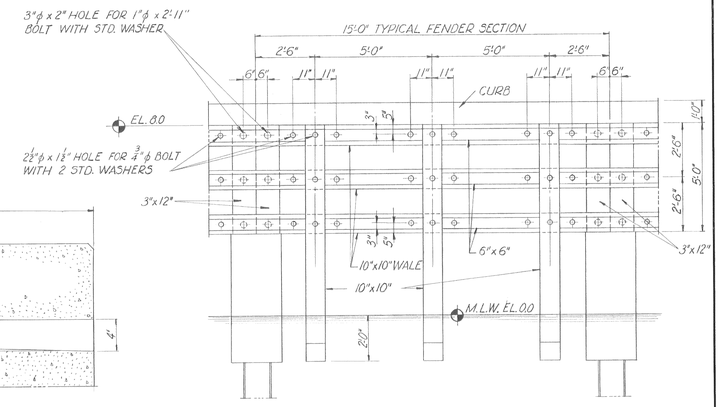

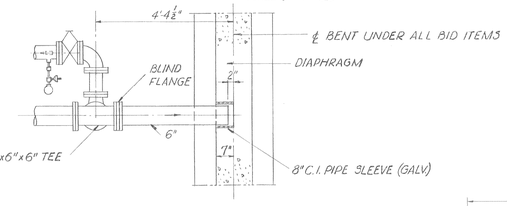

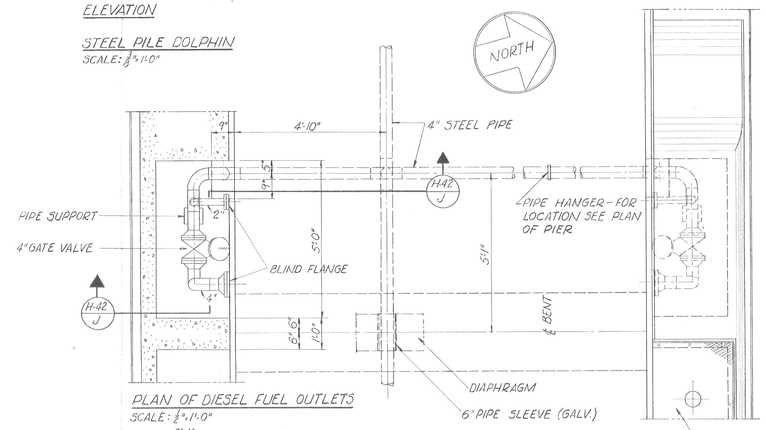

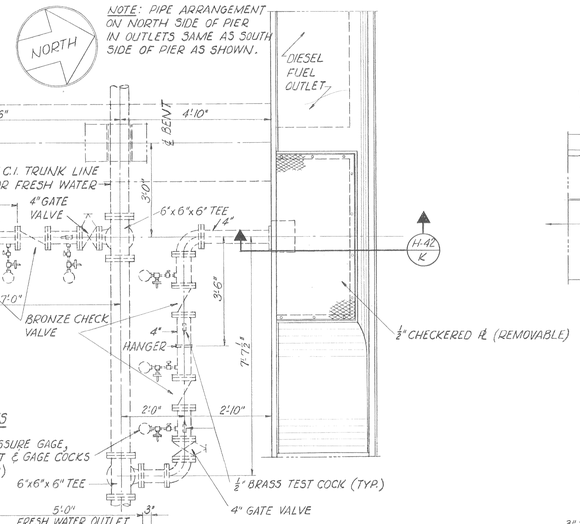

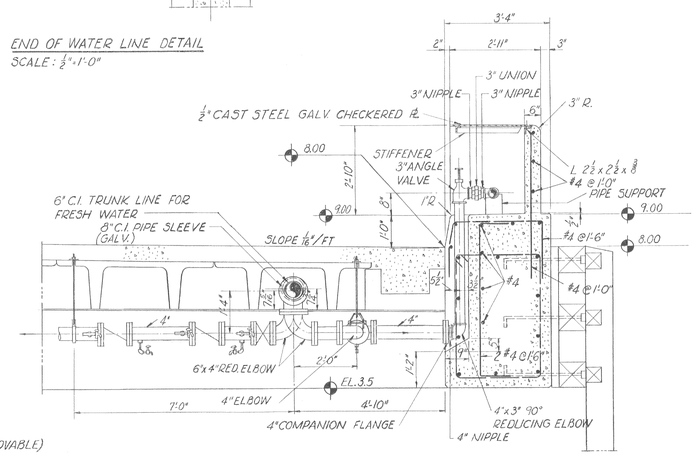

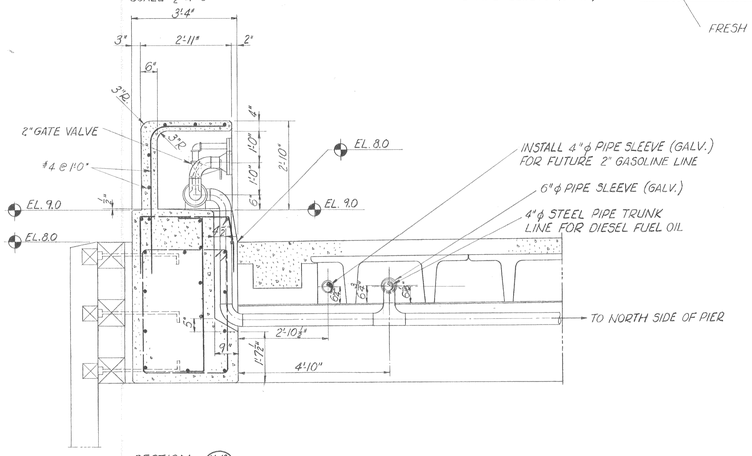

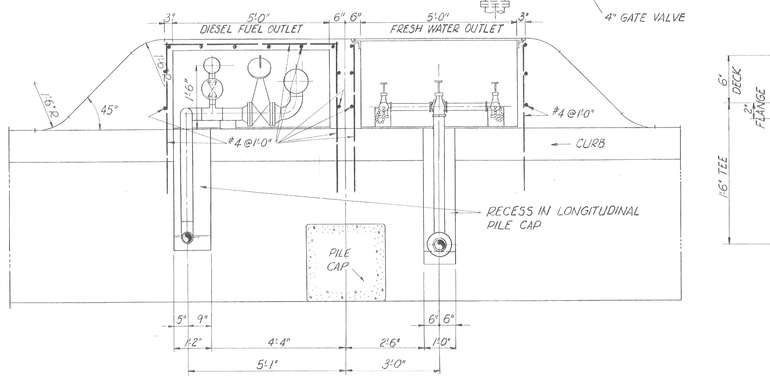

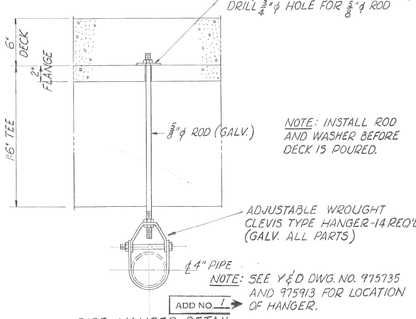

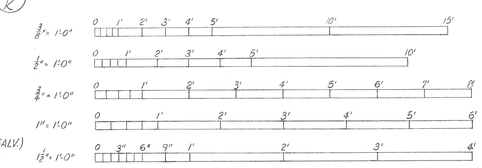

RECORD DRAWING
DATE 1 MAY 1967

	AS BUILT DRWG. NO CORRECTIONS		
REV. 2	REVISED TO CONFORM WITH ADDENDA NOS. 1 THROUGH 7	1/24/64	Hunter
REV. 1 ADD 1	CHANGE ELEVATION REF.	10/28/63	Hunter

REVISIONS

THOMAS B. BOURNE ASSOCIATES, INC.
REYNOLDS, SMITH AND HILLS
WASHINGTON, D.C. - JACKSONVILLE, FLA.
ARCHITECTS — ENGINEERS

A&E FILE NO. 62131
SUPV MAHONEY | CH ENGR CROMARTIE
SUBMITTED BY Richard Hunter DATE 1 MAR 63
FIRM MEMBER (TITLE) PARTNER
BUREAU:
MGR Mikeely RVD. DIR Hunter
APPROVED DATE
OFFICER IN CHARGE
APPROVED FOR BUDOCKS DATE 5/13/63
FOR CHIEF OF BUREAU

DEPARTMENT OF THE NAVY — WASHINGTON, D. C.
BUREAU OF YARDS & DOCKS

PROJECT AUTEC PHASE I AND II
MAIN BASE - HARBOR FACILITIES
SITE I
CIVIL - PIER DETAILS

CODE IDENT NO.	SIZE	Y & D DRAWING NO.
80091	F	975737
SCALE AS SHOWN	SPEC 48900/62-63 NBy 48900	SHEET H-42 OF 50

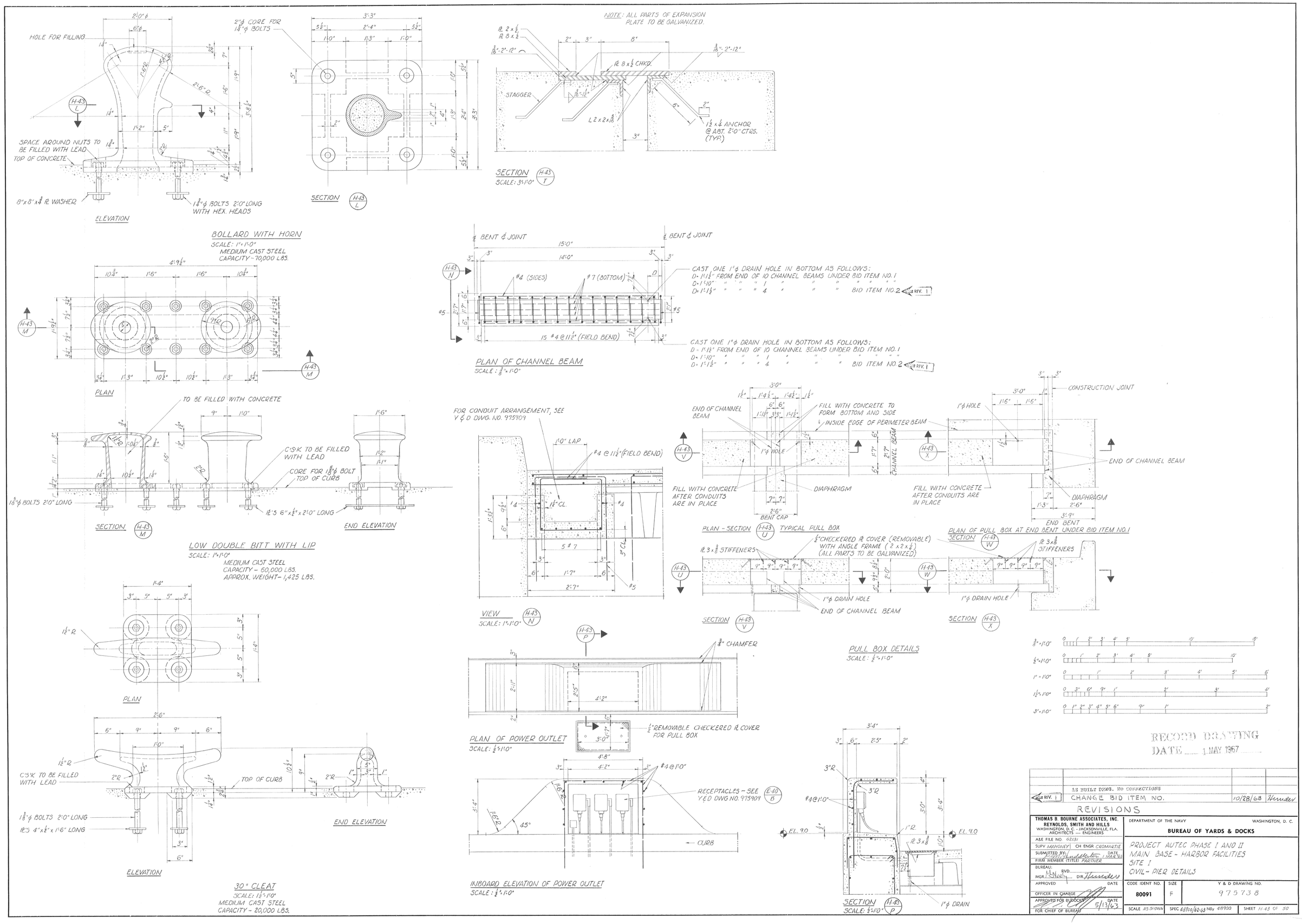
HOLE FOR FILLING
SPACE AROUND NUTS TO BE FILLED WITH LEAD
TOP OF CONCRETE
8"x8"x3/8" PL WASHER
1 3/4"φ BOLTS 2'0" LONG WITH HEX. HEADS
ELEVATION
2"φ CORE FOR 1 3/8"φ BOLTS
SECTION
NOTE: ALL PARTS OF EXPANSION PLATE TO BE GALVANIZED.
STAGGER
L 2x2x3/16
1 1/2 x 1/4 ANCHOR @ ABT. 2'0" CTRS. (TYP.)
SECTION
SCALE: 3"=1'0"
BOLLARD WITH HORN
SCALE: 1"=1'0"
MEDIUM CAST STEEL
CAPACITY ~ 70,000 LBS.
PLAN
BENT ℄ JOINT
#4 (SIDES)
#7 (BOTTOM)
CAST ONE 1"φ DRAIN HOLE IN BOTTOM AS FOLLOWS:
D = 1'-1 1/2" FROM END OF 10 CHANNEL BEAMS UNDER BID ITEM NO. 1
D = 1'-10" " " " 1 " " " " " "
D = 1'-1 1/2" " " " 4 " " " BID ITEM NO. 2 REV. 1
15 #4 @ 11 1/2" (FIELD BEND)
PLAN OF CHANNEL BEAM
SCALE: 3/8"=1'0"
TO BE FILLED WITH CONCRETE
C'S'K TO BE FILLED WITH LEAD
CORE FOR 1 3/8"φ BOLT TOP OF CURB
1 3/8"φ BOLTS 2'0" LONG
PL'S 6"x1/2"x2'0" LONG
SECTION
END ELEVATION
LOW DOUBLE BITT WITH LIP
SCALE: 1"=1'0"
MEDIUM CAST STEEL
CAPACITY – 60,000 LBS.
APPROX. WEIGHT – 1,425 LBS.
FOR CONDUIT ARRANGEMENT, SEE Y&D DWG. NO. 975909
1'0" LAP
#4 @ 11 1/2" (FIELD BEND)
VIEW
SCALE: 1"=1'0"
END OF CHANNEL BEAM
FILL WITH CONCRETE TO FORM BOTTOM AND SIDE
INSIDE EDGE OF PERIMETER BEAM
1"φ HOLE
CHANNEL BEAM
FILL WITH CONCRETE AFTER CONDUITS ARE IN PLACE
DIAPHRAGM
BENT CAP
PLAN - SECTION
TYPICAL PULL BOX
CONSTRUCTION JOINT
END BENT
PL 3x3/8 STIFFENERS
1/2" CHECKERED PL COVER (REMOVABLE) WITH ANGLE FRAME (2x2x1/4) (ALL PARTS TO BE GALVANIZED)
1"φ DRAIN HOLE
PLAN OF PULL BOX AT END BENT UNDER BID ITEM NO. 1
PULL BOX DETAILS
SCALE: 1/2"=1'0"
3/4" CHAMFER
1/2" REMOVABLE CHECKERED PL COVER FOR PULL BOX
PLAN OF POWER OUTLET
SCALE: 1/2"=1'0"
RECEPTACLES ~ SEE Y&D DWG. NO. 975909
CURB
INBOARD ELEVATION OF POWER OUTLET
SCALE: 1/2"=1'0"
1"φ DRAIN
SECTION
SCALE: 1/2"=1'0"
30" CLEAT
SCALE: 1 1/2"=1'0"
MEDIUM CAST STEEL
CAPACITY – 20,000 LBS.
RECORD DRAWING
DATE 1 MAY 1967
REV. 1 AS BUILT DRWG. NO CORRECTIONS
CHANGE BID ITEM NO. 10/28/63
REVISIONS
THOMAS B. BOURNE ASSOCIATES, INC.
REYNOLDS, SMITH AND HILLS
WASHINGTON, D.C. - JACKSONVILLE, FLA.
ARCHITECTS — ENGINEERS
DEPARTMENT OF THE NAVY
WASHINGTON, D. C.
BUREAU OF YARDS & DOCKS
A&E FILE NO. 62131
SUPV MAHONEY
CH ENGR CROMARTIE
SUBMITTED BY
FIRM MEMBER (TITLE) PARTNER
BUREAU:
MGR
DIR
APPROVED
DATE
OFFICER IN CHARGE
APPROVED FOR BUDOCKS
FOR CHIEF OF BUREAU
PROJECT AUTEC PHASE I AND II
MAIN BASE - HARBOR FACILITIES
SITE I
CIVIL - PIER DETAILS
CODE IDENT NO. 80091
SIZE F
Y & D DRAWING NO. 975738
SCALE AS SHOWN
SPEC 48900/62-63 NBy 48900
SHEET H-43 OF 50

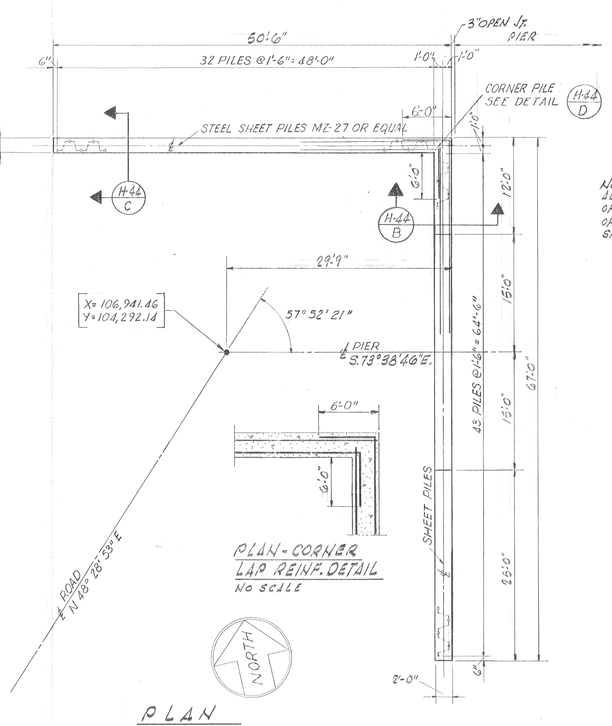

PLAN
SCALE: 1/8" = 1'-0"

PLAN - CORNER LAP REINF. DETAIL
No SCALE

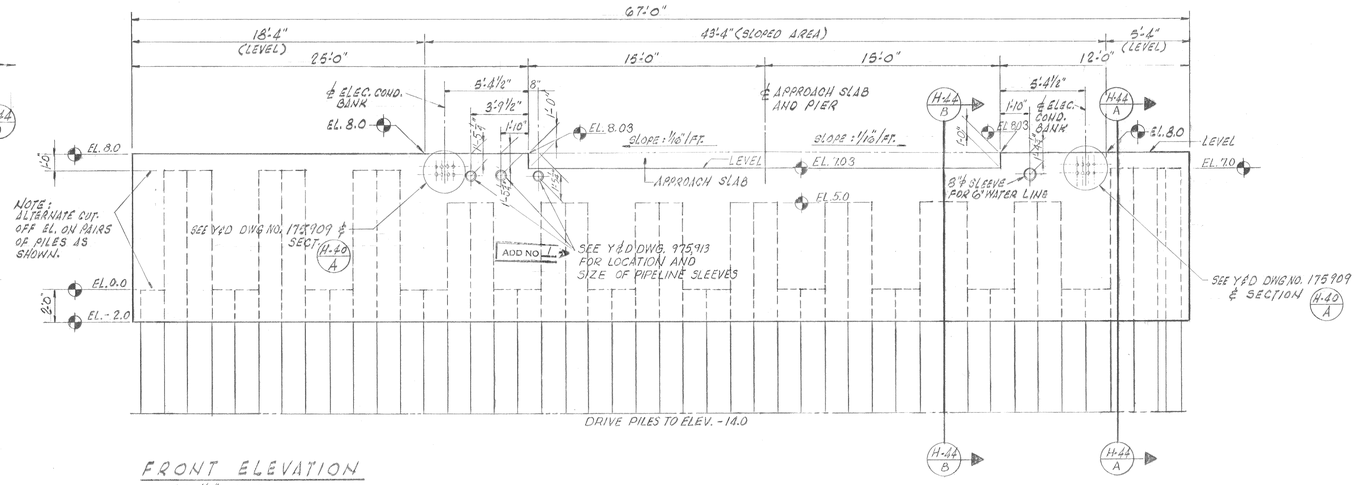

FRONT ELEVATION
SCALE: 1/8" = 1'-0"

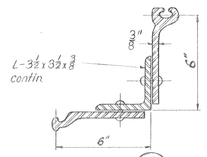

NOTE: ALL RIVETS 7/8" DIAMETER WITH STANDARD SPACING 3" MAXIMUM FOR 2 FEET TOP AND BOTTOM, 8" MAXIMUM FOR REMAINDER OF LENGTH.

DETAIL H-44 D
SCALE: 3" = 1'-0"

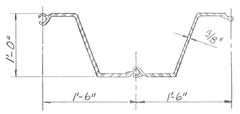

TYPICAL SHEET PILE DETAIL
SCALE: 1" = 1'-0"

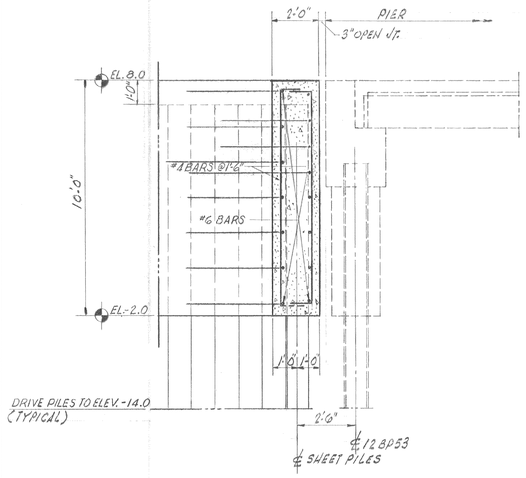

SECTION H-44 A
SCALE: 3/8" = 1'-0"

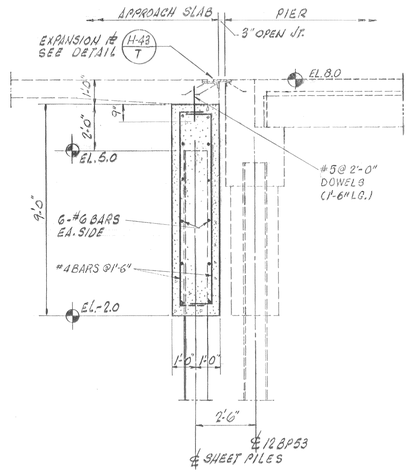

SECTION H-44 B
SCALE: 3/8" = 1'-0"

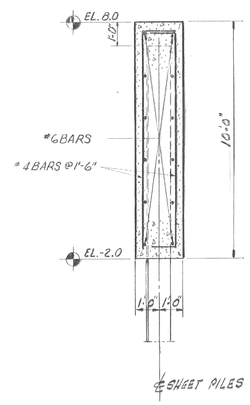

SECTION H-44 C
SCALE: 3/8" = 1'-0"

GENERAL STRUCTURAL NOTES

1. ALL STEEL SHEET PILES SHALL BE SIMILAR OR EQUAL TO MZ-27, AND SHALL BE DRIVEN TO A TIP ELEVATION OF -14.0
2. CONCRETE FOR BULKHEAD CAPS SHALL HAVE A MINIMUM BREAKING STRENGTH OF 3,000 PSI AFTER 28 DAYS. THE USE OF LOCAL AGGREGATE WILL NOT BE PERMITTED.
3. ALL REINFORCING STEEL SHALL HAVE 4" CLEAR COVER UNLESS OTHERWISE NOTED.

GRAPHIC SCALES

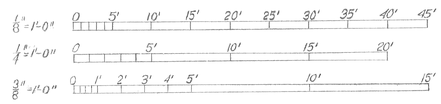

RECORD DRAWING
DATE 1 MAY 1967

	AS BUILT DRWG. NO CORRECTIONS		
REV. 1	REVISED TO CONFORM WITH ADDENDA NOS. 1 THROUGH 7	1/24/64	[illegible]

REVISIONS

THOMAS B. BOURNE ASSOCIATES, INC.
REYNOLDS, SMITH AND HILLS
WASHINGTON, D.C. — JACKSONVILLE, FLA.
ARCHITECTS — ENGINEERS

A&E FILE NO. 62131
SUPV. M.NEWEY | CH ENGR. C.ROMARTIN
SUBMITTED BY [signature] DATE 11/20/63
FIRM MEMBER (TITLE) PARTNER
BUREAU: MGR. [signature] RVD. DIR. [signature]
APPROVED [signature] DATE
OFFICER IN CHARGE
APPROVED FOR BUDOCKS [signature] DATE 8/14/63
FOR CHIEF OF BUREAU

DEPARTMENT OF THE NAVY — WASHINGTON, D. C.
BUREAU OF YARDS & DOCKS

PROJECT AUTEC PHASE I AND II
MAIN BASE-HARBOR FACILITIES
SITE 1
CIVIL - PIER BULKHEAD PLAN & DETAILS

CODE IDENT NO.	SIZE	Y & D DRAWING NO.
80091		975739
SCALE AS SHOWN	SPEC 48900/62-63 NBy 48900	SHEET H-44 OF 50