GENERAL NOTES & DESIGN CRITERIA

STRUCTURAL DESIGN SCOPE

1) PROVIDE REPAIRS TO EXISTING FACILITY FOR SAFE AND PROPER BERTHING OF VESSELS. A 2010 INSPECTION REPORT BY HALCROW INC. DETERMINED THE EXISTING FACILITY TO BE IN POOR CONDITION (SUBSTRUCTURE CONDITION INDEX RATING OF 45) AND PARTIALLY OPERATIONAL. THE INTENT OF THE REPAIRS ARE TO ACHIEVE A FULLY OPERATIONAL FACILITY.

DESIGN CRITERIA

1) UFC 3-301-01, STRUCTURAL ENGINEERING, JANUARY 2012
2) UFC 4-150-02, DOCKSIDE UTILITIES FOR SHIP SERVICE, MARCH 2011
3) UFC 4-151-10, GENERAL CRITERIA FOR WATERFRONT CONSTRUCTION, SEPTEMBER 2001
4) UFC 4-152-01, DESIGN OF PIERS AND WHARVES, SEPTEMBER 2005

DESIGN LOADS

1) DEAD LOADS:
   STRUCTURE SELF WEIGHT
2) LIVE LOADS:
   DECK AREA = 600 PSF UNIFORM
3) WHEEL LOADS:
   DECK AREA = AASHTO HS-20-44, 20TON LIFT TRUCK
4) TRENCH COVERS = AASHTO HS-20-44, 20TON LIFT TRUCK
5) CRANE LOADS = MOBILE CRANES (SEE BELOW & LOADING PLANS ON SHEET S002-S005)

28 TON MOBILE CRANE OUTRIGGER LOADS

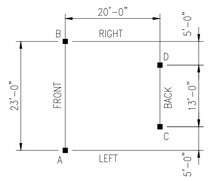

OUTRIGGER LOCATION	LOAD (KIPS)
A	52.8
B	31.7
C	21.2
D	0.0

NOTE: OUTRIGGER LOADS ARE BASED ON A NATIONAL 11105 28-TON CRANE WITH AN 8 KIP LIFT LOAD AT THE END OF A 30 FT BOOM RADIUS ROTATED OVER THE LEFT FRONT OUTRIGGER (90 DEGREE ROTATION).

80 TON MOBILE CRANE OUTRIGGER LOADS

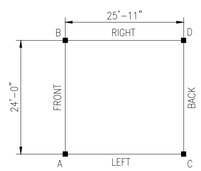

OUTRIGGER LOCATION	LOAD (KIPS)
A	0.00
B	47.0
C	48.5
D	118.9

NOTE: OUTRIGGER LOADS ARE BASED ON A GROVE RT880E 80-TON CRANE WITH AN 30 KIP LIFT LOAD AT THE END OF A 40 FT BOOM RADIUS ROTATED OVER THE RIGHT BACK OUTRIGGER (135 DEGREE ROTATION).

6) BERTHING LOADS

VESSEL NAME	LOA(FT)	BEAM(FT)	DRAFT(FT)	DISPLACEMENT (LT) 1	BERTHING SPEED(FT/SEC)
RANGER	192	40	15	1659	1.5
RANGER ROVER	180	40	15	675	1.5
RANGE MASTER	110	26	10.5	320	1.5
LCM(8)-6775	74	21	4.75	118	1.5

7) WIND LOADS:
   BASIC WIND SPEED = 148 MPH (128.7 KNOTS)

EXISTING CONDITION

1) REFER TO RECORD DRAWINGS, THOMAS B. BOURNE ASSOCIATES, INC. DATED MAY 5, 1963 (BUREAU OF YARDS AND DOCKS DRAWINGS 975739 TO 975739) AND DRAWINGS BY NAVFAC SOUTHERN DIVISION DATED NOVEMBER 1, 1982 (NAVFAC DRAWINGS 5099652 TO 5099671 AND 5135711). REFER TO ENGINEERING REPORTS, INSPECTION REPORT AND LOAD ANALYSIS REPORT BY HALCROW, INC. DATED JANUARY 2010 AND FEBRUARY 17, 2012 RESPECTIVELY. THE GOVERNMENT MAKES NO CLAIM REGARDING THE ACCURACY OF THESE DRAWINGS AND REPORTS. THE CONTRACTOR IS RESPONSIBLE TO FIELD VERIFY ALL INFORMATION REPRESENTED IN THESE DRAWINGS AND REPORTS. RECORD DRAWINGS ARE INCORPORATED INTO THIS CONTRACT BY REFERENCE. RECORD DRAWINGS AND REPORTS ARE AVAILABLE UPON REQUEST.
2) EXISTING MATERIAL STRENGTHS ARE BASED ON 2010 INSPECTION REPORT BY HALCROW, INC. AND 1982 DRAWINGS BY NAVFAC SOUTHERN DIVISION. THE CONTRACTOR MUST HIRE A TESTING AGENCY TO CONFIRM THE MATERIAL STRENGTHS PRIOR TO ANY REPAIR WORK. THE MATERIAL STRENGTHS PER THE EXISTING DRAWINGS ARE AS FOLLOWS:

   1963 CAST-IN-PLACE CONCRETE: f'c = 3,000 PSI
   1963 REBAR fy = 60,000 PSI
   1963 STRUCTURAL STEEL: fy = 33,000 PSI

   1982 CAST-IN-PLACE CONCRETE: f'c = 4,000 PSI
   1982 PRECAST CONCRETE: f'c = 6,000 PSI
   1982 REBAR fy = 60,000 PSI (EPOXY COATED PER ASTM D 3963-81)
   1982 PRESTRESSING STRANDS: fy = 270,000 PSI
   1983 STRUCTURAL STEEL: fy = 36,000 PSI (COMPLETELY EMBEDDED OR GALV)

GENERAL INFORMATION

1) THESE NOTES ARE NOT INTENDED TO REPLACE THE SPECIFICATIONS. SEE SPECIFICATION FOR REQUIREMENTS IN ADDITION TO GENERAL NOTES.
2) THE STRUCTURAL DRAWINGS AND SPECIFICATIONS REPRESENT THE FINISHED STRUCTURE AND DO NOT INDICATE THE MEANS OR METHODS OF CONSTRUCTION. THE CONTRACTOR SHALL SUPERVISE AND DIRECT THE WORK AND SHALL BE SOLELY RESPONSIBLE FOR ALL CONSTRUCTION MEANS, METHODS, PROCEDURES, TECHNIQUES AND SEQUENCE.
3) DO NOT SCALE DIMENSIONS FROM DRAWINGS. THE CONTRACTOR SHALL REQUEST, IN WRITING, FROM THE GOVERNMENT ANY NECESSARY DIMENSIONS NOT SHOWN ON THE DRAWINGS.
4) REPRODUCTION OF CONTRACT DRAWINGS SHALL NOT BE USED AS SHOP DRAWINGS UNDER ANY CIRCUMSTANCE.
5) CONTRACTOR SHALL FIELD VERIFY ALL DIMENSIONS AND CONDITIONS OF EXISTING STRUCTURE AND SITE THAT ARE AFFECTED BY NEW WORK BEFORE PRECEDING. NOTIFY CONTRACTING OFFICER OF ANY DISCREPANCIES THAT IMPACT NEW WORK PRIOR TO MOBILIZATION TO THE SITE.
6) REFERENCE ELEVATION OF 0.00 FEET REFERENCED TO MEAN LOW WATER LEVEL. FOLLOWING IS THE TIDAL INFORMATION AVAILABLE FROM THE EXISTING DESIGN DRAWINGS (REF. PIER REPAIR NUSC AUTEC BY NAVFAC SOUTHERN DIVISION DATED NOVEMBER 1, 1982 NAVFAC DRAWINGS 5099652 TO 5099671:

   MEAN HIGH WATER(MHW) +3.00FT
   MSL 1.50FT
   MEAN LOW WATER(MLW) 0.00FT
7) ALL DIVING OPERATIONS SHALL BE CONDUCTED IN ACCORDANCE WITH CONTRACT REQUIREMENTS AND CONTRACTOR'S SAFETY PRACTICES.
8) CONTRACTOR SHALL PROVIDE UNDERWATER & UNDER-PIER VIDEO SURVEY BEFORE AND AFTER CONSTRUCTION.

INSPECTION NOTES

1) CONTRACTOR MUST HIRE AN ENGINEER/DIVE FIRM FOR INSPECTION SERVICE TO VERIFY THE FINDING OF THE 2010 INSPECTION REPORT BY HALCROW, INC. VIA UNDERWATER AND SURFACE INSPECTION. THE INSPECTION MUST VERIFY TYPE, LOCATION, AND SIZE OF ALL DEFECTS NOTED IN THE 2010 REPORT AND MUST RECORD ANY ADDITIONAL DEFECTS THAT WERE NOT INCLUDED IN THE 2010 REPORT. RESULTS OF THE INSPECTION SHALL BE PROVIDED TO NAVFAC IN A WRITTEN REPORT. THE INSPECTION MUST BE PERFORMED BY A LICENSED PROFESSIONAL ENGINEER (P.E.). UNDERWATER AND SURFACE INPECTION SHALL BE PERFORMED BY THE SAME ENGINEER/DIVE FIRM. 1
2) ANY WORK THAT IS IN ADDITION TO THE REPAIRS SHOWN ON THESE CONSTRUCTION DRAWINGS MUST BE APPROVED BY NAVFAC PRIOR TO CONSTRUCTION. 1

CONSTRUCTION NOTES

1) ALL CRANE OPERATIONS SHALL BE CONDUCTED IN ACCORDANCE WITH CONTRACT, FEDERAL, STATE AND LOCAL REQUIREMENTS. CONTRACTOR IS RESPONSIBLE TO DETERMINE IF CONSTRUCTION EQUIPMENT CAN OPERATE SAFELY ON THE PIER.
2) BOTTOM DEBRIS GENERATED BY THE CONTRACTOR SHALL BE REMOVED AT NO ADDITIONAL COST TO THE GOVERNMENT. DIVERS SHALL BE USED TO LOCATE AND RECOVER CONTRACTOR GENERATED BOTTOM DEBRIS. THE USE OF CLAM SHELL BUCKETS OR SIMILAR METHODS IS PROHIBITED.
3) PROVIDE TURBIDITY CURTAIN AROUND ALL ACTIVE CONSTRUCTION AREAS. TURBIDITY CURTAIN SHALL EXTEND FROM WATER SURFACE TO MUDLINE. ANCHOR PER MANUFACTURER'S REQUIREMENTS.
4) CONTRACTOR IS RESPONSIBLE FOR THE EMPLOYMENT OF A DELEGATED ENGINEER TO ANALYZE AND DESIGN ALL NECESSARY SHORING AND BRACING AS REQUIRED PER CONTRACTOR'S MEANS AND METHODS OF CONSTRUCTION. SHORING AND BRACING DRAWINGS SHALL BE SIGNED AND SEALED BY A REGISTERED PROFESSIONAL ENGINEER AND SHALL BE REVIEWED BY NAVFAC PRIOR TO CONSTRUCTION.
5) DO NOT ALLOW ANY VEHICLE TRAFFIC ON OR DIRECTLY ABOVE CAST-IN-PLACE CONCRETE UNTIL THE CONCRETE HAS REACHED ITS 28-DAY DESIGN COMPRESSIVE STRENGTH. KEEP ALL VEHICLE TRAFFIC AT LEAST 23 FEET AWAY FROM CAST-IN-PLACE CONCRETE FOR A MINIMUM OF 24 HOURS AFTER THE CONCRETE IS PLACED TO AVOID BONDING FAILURE DUE TO VEHICLE INDUCED VIBRATION & DEFLECTION.

STRUCTURAL DEMOLITION NOTES

1) REMOVE ALL ITEMS AS DETAILED IN THE DRAWINGS SHEETS. REFER TO CIVIL & ELECTRICAL SHEETS FOR ANY ADDITIONAL REQUIREMENTS.
2) SEE EXISTING CONCRETE FENDER REMOVAL NOTES FOR ADDITIONAL DEMOLITION INFORMATION.
3) IT IS ANTICIPATED THAT THE EXISTING PRECAST CONCRETE PLANKS DO NOT HAVE GROUTED KEYWAYS. IF GROUTED KEYWAYS ARE DISCOVERED DURING DEMOLITION, THE CONTRACTING OFFICER SHALL BE NOTIFIED FOR RESOLUTION.

EXISTING CONCRETE FENDER REMOVAL NOTES

1) EXISTING CONCRETE FENDER PANELS MAY BE REMOVED IF REQUIRED TO PERFORM THE DESIGNED REPAIRS.
2) REMOVE AND STORE FENDER PANELS IN A LOCATION APPROVED BY THE CONTRACTING OFFICER.
3) CONTRACTOR MUST RE-INSTALL OR REPLACE EXISTING PANELS AT COMPLETION OF REPAIR CONSTRUCTION ACCORDING TO THE DETAILS ON SHEET S504. CONTRACTOR MAY INSTALL NEW CONCRETE FENDERS TO MATCH OR NEW MODULAR RUBBER FENDERS ONLY IF THE NEW FENDER SYSTEM DOES NOT EXCEED THE COST OF RE-INSTALLING THE EXISTING SYSTEM. IF CONTRACTOR ELECTS TO INSTALL A NEW FENDER SYSTEM THEN CONTRACTOR MUST DISPOSE OF EXISTING PANELS IN ACCORDANCE WITH THE CONTRACTING OFFICER. ANY NEW CONCRETE FENDER SYSTEM CAN NOT EXCEED THE WEIGHT AND THE THICKNESS OF THE EXISTING SYSTEM. FOR RUBBER FENDER SYSTEM REQUIREMENTS SEE NOTES BELOW. FINAL FENDER SYSTEM MUST BE A COMPLETE SYSTEM USING ONE TYPE OF FENDER, CONCRETE OR RUBBER, AND NOT A COMBINATION OF BOTH. NEW FENDER SYSTEM ALONG GRID 33 MUST BE RUBBER PER DETAIL 7/S504.

REPAIR CONCRETE

1) ALL CONCRETE CONSTRUCTION SHALL BE IN ACCORDANCE WITH THE PROVISIONS OF THE AMERICAN CONCRETE INSTITUTE (ACI) BUILDING CODE REQUIREMENTS FOR STRUCTURAL CONCRETE (ACI 318), JANUARY 2008.
   A. THE 28-DAY CONCRETE COMPRESSIVE STRENGTH SHALL BE A MINIMUM OF 3,000 PSI.
   B. UNLESS OTHERWISE INDICATED, MINIMUM CONCRETE COVER OVER STEEL REINFORCEMENT SHALL BE 3 INCHES UNLESS NOTED OTHERWISE IN THE DETAILS.
   C. REFER TO SPECIFICATIONS FOR ADDITIONAL REQUIREMENTS.
2) STEEL REINFORCEMENT SHALL MEET THE REQUIREMENTS OF ASTM A615-12 GRADE 60.
3) DO NOT USE EPOXY BONDING COMPOUNDS ON EXISTING CONCRETE PREPARED FOR CONCRETE REPAIRS.
4) REPAIR CONCRETE MUST BE A FLOWABLE MIX THAT CAN BE PUMPED.
5) THE HOSE USED TO DELIVERY THE CONCRETE TO THE POINT OF PLACEMENT SHALL HAVE A PRESSURE GAUGE AND SHUT OFF VALVE AT THE NOZZLE. FORMS SHALL HAVE PORTS THAT ACCOMMODATE THE HOSE NOZZLE FOR CONCRETE DELIVERY AND SHALL HAVE PORTS FOR VENTILATING AIR POCKETS. PORTS SHALL BE PVC.

CAST-IN-PLACE CONCRETE TOPPING (OVER PRECAST PLANKS)

1) ALL CONCRETE CONSTRUCTION SHALL BE IN ACCORDANCE WITH THE PROVISIONS OF THE AMERICAN CONCRETE INSTITUTE (ACI) BUILDING CODE REQUIREMENTS FOR STRUCTURAL CONCRETE (ACI 318), JANUARY 2008.
   A. THE 28-DAY CONCRETE COMPRESSIVE STRENGTH SHALL BE A MINIMUM OF 4,000 PSI.
   B. UNLESS OTHERWISE INDICATED, MINIMUM CONCRETE COVER OVER STEEL REINFORCEMENT SHALL BE 3 INCHES.
   C. REFER TO SPECIFICATIONS FOR ADDITIONAL CIP CONCRETE REQUIREMENTS.
2) EPOXY CHEMICAL EMBED MATERIAL SHALL MEET THE REQUIREMENTS OF ASTM C881 TYPE IV, GR 3.
3) STEEL REINFORCEMENT SHALL MEET THE REQUIREMENTS OF ASTM A615-12 GRADE 60. ALL REINFORCEMENT SHALL BE COATED PER ASTM A934-07.
4) PROVIDE NON-SHRINK GROUT MEETING THE REQUIREMENTS OF ASTM C1107 WITH A WATER-SOLUBLE CHLORIDE CONTENT LESS THAN 0.10% BY MASS TO TOTAL MASS OF THE TOTAL CEMENTITIOUS MATERIALS. PROVIDE A MINIMUM 5,000 PSI 28-DAY COMPRESSIVE STRENGTH GROUT.
5) FOR CIP CONCRETE AGAINST EXISTING CONCRETE:
   A. PREPARE EXISTING CONCRETE SURFACE AS REQUIRED BY EPOXY BONDING COMPOUND MANUFACTURER
   B. PROVIDE EPOXY BONDING MEETING REQUIREMENTS OF ASTM C881 TYPE 2, GRADE 1 WITH CLASS MATCHING REQUIRED PLACEMENT AMBIENT TEMPERATURE RANGE.

PRECAST CONCRETE

1) ALL PRECAST CONCRETE CONSTRUCTION SHALL BE IN ACCORDANCE WITH THE PROVISIONS OF THE AMERICAN CONCRETE INSTITUTE "BUILDING REQUIREMENTS FOR STRUCTURAL CONCRETE" (ACI 318) AND THE DESIGN RECOMMENDATIONS OF THE PRECAST CONCRETE INSTITUTE MANUAL, "PCI DESIGN HANDBOOK – PRECAST AND PRESTRESSED CONCRETE".
2) THE PRECAST CONCRETE SUPPLIER (PCS) SHALL PRODUCE A COMPLETE SET OF SHOP DRAWINGS AND CALCULATIONS SEALED BY A PROFESSIONAL ENGINEER LICENSED IN THE UNITED STATES. SHOP DRAWINGS SHALL INCLUDE ALL INFORMATION REQUIRED TO PROPERLY INSTALL THE PRECAST CONCRETE AND ANY DETAILS REQUIRED FOR SPECIAL INTERFACING WITH OTHER ELEMENTS OF THE STRUCTURE. DESIGN ALL PRECAST CONCRETE AND CONNECTIONS TO RESIST THE VERTICAL AND HORIZONTAL LOADS INDICATED ON THE CONTRACT DOCUMENTS AS WELL AS ALL ERECTION FORCES.
3) REFER TO SHEET S501-504 FOR ADDITIONAL PRECAST CONCRETE REQUIREMENTS.
4) CONCRETE DENSITY SHALL BE NORMAL WEIGHT (+144 PCF) UNLESS SPECIFICALLY NOTED OTHERWISE.
5) DESIGN ALL ELEMENTS AND CONNECTIONS TO RESIST THE VERTICAL AND HORIZONTAL LOADS INDICATED ON THE CONTRACT DOCUMENTS. DESIGN AND PROVIDE ALL NECESSARY MATERIAL FOR ALL OF THE PRECAST CONCRETE CONNECTIONS INDICATED ON THE CONTRACT DRAWINGS INCLUDING BUT NOT LIMITED TO ALL LOOSE HARDWARE, BEARING MATERIAL, AND WELDING. GALVANIZE ALL STEEL CONNECTION MATERIAL EXPOSED TO WEATHER.
6) DESIGN AND PROVIDE ALL EMBEDDED ITEMS SHOWN ON THE CONTRACT DOCUMENTS TO RESIST THE LOADS INDICATED. ALL LOADS INDICATED ARE SERVICE LEVEL LOADS UNLESS NOTED OTHERWISE.
7) MINIMUM STRENGTH OF PRECAST SHALL BE fc' = 6,000 PSI.
8) PRECAST REINFORCING SHALL MEET THE REQUIREMENTS OF ASTM A615-12 GRADE 60. ALL REINFORCEMENT SHALL BE COATED PER ASTM A934-07.
9) CONTRACTOR SHALL CAREFULLY FIELD MEASURE TO OBTAIN THE DIMENSIONS FOR THE NEW PRECAST. THE PRECASTER SHALL CONSIDER THE JOINT REQUIREMENTS BETWEEN THE NEW AND EXISTING PRECAST DURING THE DESIGN FOR INSTALLATION TOLERANCE.
10) PRECAST SHALL NOT BE PRESTRESSED.

STEEL

1) THE DESIGN, FABRICATION AND ERECTION OF STRUCTURAL STEEL FOR BUILDINGS AND STRUCTURES SHALL BE IN ACCORDANCE WITH THE SPECIFICATION FOR STRUCTURAL STEEL BUILDINGS, ANSI/AISC 360-05, MARCH 9, 2005.
2) THE REQUIRED MATERIAL SPECIFICATION FOR STRUCTURAL STEEL MEMBERS ARE AS FOLLOWS:
   SQUARE AND RECTANGULAR HSS---------- ASTM A500, GRADE B
   PLATES, CHANNELS AND ANGLES---------- ASTM A36
   ANCHOR RODS W/ NUT AND WASHER---------- ASTM F1554, GRADE 36
   THREADED ROD---------- ASTM A36
   WELDING ELECTRODE---------- AWS D1.1, E70XX
   HOT DIPPED GALVANIZED HARDWARE---------- ASTM A153
   HOT DIPPED GALVANIZED PRODUCTS---------- ASTM A123, GRADE 100
   CLEANING PRIOR TO HDG---------- SSPC SP10, NEAR WHITE
3) ALL WELDED AND MANUFACTURED STEEL PRODUCTS SHALL BE HOT DIPPED GALVANIZED TO THE REQUIREMENTS OF ASTM A123-08 AFTER ALL WELDING AND MANUFACTURING PROCESSES ARE COMPLETED. REMOVE ALL WELDING SLAG AND FLUX FROM STEEL SURFACE PRIOR TO CLEANING. ALL STEEL SHAPES SHALL BE CLEANED TO THE REQUIREMENTS OF SSPC-SP10/NACE NO. 2 FINISH PRIOR TO GALVANIZING.
4) ALL WELDING SHALL BE IN ACCORDANCE WITH THE STRUCTURAL WELDING CODE, AWS D1.1; LATEST ADDITION.
5) WELDING OF HOT DIPPED GALVANIZED ITEMS SHALL BE IN ACCORDANCE WITH AWS WZC/D19.0, "WELDING ZINC-COATED STEEL". REMOVE GALVANIZED COATING BY GRINDING OR OTHER ACCEPTABLE METHOD A MINIMUM OF 2 INCHES IN ALL DIRECTIONS FROM THE WELD CENTERLINE. AFTER WELDING, CLEAN & REPAIR WELD EFFECTED ZONE(S) AS REQUIRED BY MIL-P-21035B AND ASTM A780. PROVIDE COATING REPAIR IN ACCORDANCE WITH MIL-P-21035B WITH A MINIMUM DRY FILM THICKNESS OF 10MILS.
6) DO NOT MIX ITEMS OF DIFFERENT GRADE OF HARDWARE ON THE SAME CONNECTION. ALL HARDWARE SHALL BE HOT DIPPED GALVANIZED TO ASTM A153-05.

PILE/PILE CAP FIBERGLASS FORMS

1) PROVIDE PERMANENT FIBERGLASS FORMS AS SHOWN ON THE DRAWINGS INCLUDING ANY NECESSARY CONNECTIONS, SHORING, AND BRACING TO HOLD FORMS IN PLACE BEFORE, DURING, AND AFTER CONCRETE PLACEMENT.
2) FIBERGLASS FORMS AND ALL ASSOCIATED CONNECTIONS, SHORING, & BRACING, SHALL BE DESIGNED BY A LICENSED ENGINEER EMPLOYED BY THE FORM SUPPLIER.
3) FIBERGLASS FORMS ARE PERMANENT AND THEREFORE SHALL BE DESIGNED TO REMAIN IN PLACE FOR THE LIFE OF THE STRUCTURE. ALL FASTENERS TO THE EXISTING CONCRETE SHALL BE ASTM A316 STAINLESS STEEL.
4) FIBERGLASS FORMS SHALL BE NON-CORROSIVE TRANSLUCENT FIBERGLASS REINFORCED PLASTIC (FRP) WITH MATERIAL PROPERTIES AS FOLLOWS:
   MINIMUM TENSILE STRENGTH----------15,000 PSI (PER ASTM D638)
   MINIMUM FLEXURAL STRENGTH---------- 25,000 PSI (PER ASTM D796)
   MINIMUM FLEXURAL MODULUS OF ELASTICITY------ 700,000 PSI (PER ASTM D790)
   WALL THICKNESS---------- ⅜" TO ¾"
   MAXIMUM WATER ABSORPTION---------- 1% (PER ASTM D570)

UNDERWATER EPOXY

1) PROVIDE UNDERWATER EPOXY AS SHOWN ON THE DRAWINGS FOR ALL EPOXY APPLIED TO THE PIER SUBSTRUCTURE.
2) UNDERWATER EPOXY SHALL BE A FLEXIBLE TWO-COMPONENT EPOXY ADHESIVE SPECIFICALLY DESIGNED FOR PRESSURE GROUTING IN CONCRETE SUBMERGED IN SALT WATER.
3) UNDERWATER EPOXY SHALL HAVE MATERIAL PROPERTIES AS FOLLOWS:
   MINIMUM TENSILE STRENGTH---------- 8,000 PSI (PER ASTM D638)
   MINIMUM FLEXURAL STRENGTH---------- 15,800 PSI (PER ASTM D695)
   MINIMUM BOND STRENGTH ---------- 2,400 PSI FOR 2 DAY MOIST (PER ASTM C882)
   2,700 PSI FOR 14 DAY MOIST

1 MODULAR FENDER SYSTEM 1

1) PROVIDE MODULAR FENDER SYSTEM AS A REPLACEMENT OPTION FOR THE EXISTING CONCRETE FENDER IF EXISTING FENDER NEEDS TO BE REMOVED FOR CONSTRUCTION ACCESSIBILITY (SEE EXISTING CONCRETE FENDER REMOVAL NOTES ON THIS SHEET). 1
2) THE MODULAR FENDER SYSTEM SHALL BE DESIGNED BY A LICENSED ENGINEER EMPLOYED BY THE FENDER SUPPLIER.
3) CONSTRUCTION SHALL BE MADE OF NON-CORROSIVE MATERIALS INTENDED FOR SALT WATER MARINE ENVIRONMENTS. 1
4) MODULAR FENDER SYSTEM SHALL BE DESIGNED FOR THE VESSEL INFORMATION PROVIDED IN THE DESIGN LOAD SECTION ON THIS SHEET. 1
5) MODULAR FENDER SYSTEM SHALL HAVE MATERIAL PROPERTIES AS FOLLOWS:
   MINIMUM TENSILE STRENGTH---------- 2,300 PSI (PER ASTM D638)
   MINIMUM BOND STRENGTH (RUBBER TO STEEL)------ 1,000 PSI (PER ASTM D429)
6) MODULAR FENDERS SHALL HAVE A LOW FRICTION FACE SHIELD COMPOSED OF ULTRA HIGH MOLECULAR WEIGHT POLYETHYLENE (UHMW-PE) MEETING THE REQUIREMENTS OF ASTM D6712. 1

ABBREVIATIONS

AB	ABANDONED	FW	FRESH WATER	REQ'D	REQUIRED
AISC	AMERICAN INSTITUTE OF STEEL CONSTRUCTION	GOV'T	GOVERNMENT	S	SOUTH
ANSI	AMERICAN NATIONAL STANDARDS INSTITUTE	ID	INSIDE DIAMETER	SCH	SCHEDULE
AP	AFT PERPENDICULAR	HDG	HOT DIPPED GALVANIZED	SECT	SECTION
ASTM	ASTM INTERNATIONAL	HORIZ	HORIZONTAL	SHT	SHEET
AWS	AMERICAN WELDING SOCIETY	IN	INCH	SIM	SIMILAR
@	AT	INFO	INFORMATION	SPECS	SPECIFICATIONS
&	AND	LB	POUND	SQ	SQUARE
APPROX	APPROXIMATE	MACH	MACHINE	SR	SEWER
BOT, BOTT	BOTTOM	MAX	MAXIMUM	SS	STAINLESS STEEL
℄	CENTER LINE	MAT'L	MATERIAL	ST	STREET
CA	COMPRESSED AIR	MB	MACHINE BOLT	STA	STATION
CG	CONTINUOUS GROUND	MCON	MILITARY CONSTRUCTION	STD	STANDARD
CIP	CAST IN PLACE	MECH	MECHANICAL	STL	STEEL
CLR	CLEAR, CLEARANCE	MIL	MILITARY	STM	STEAM
CONC	CONCRETE	MIN	MINIMUM	STR	STAGGER
CONT	CONTINUED, CONTINUOUS	MISC	MISCELLANEOUS	SUBSTA	SUBSTATION
CP	COMPLETE PENETRATION	MLW	MEAN LOW WATER	SW	SALT WATER
CU	COPPER	MLLW	MEAN LOWER LOW WATER	SYMM	SYMMETRICAL
DB	DOUBLE BITT	MPH	MILES PER HOUR	T	TON
DBL	DOUBLE	MSL	MEAN SEA LEVEL	T & B	TOP & BOTTOM (TOP & BOT)
DEMO	DEMOLITION	N	NORTH	TEL	TELEPHONE
DET	DETAIL	NAVFAC	NAVAL FACILITIES ENGINEERING COMMAND	THRD	THREADED
DIA OR Ø	DIAMETER	NIC	NOT IN CONTRACT	TYP	TYPICAL
DIM	DIMENSION	No	NUMBER	UFC	UNIFIED FACILITIES CRITERIA
DWG	DRAWING	NTS, NS	NOT TO SCALE	UHMWP	ULTRA HIGH MOLECULAR WEIGHT PLASTIC
EA	EACH	OC	ON CENTER	UNO	UNLESS NOTED OTHERWISE
EF	EACH FACE	OD	OUTSIDE DIAMETER	V	VOLT
EL	ELEVATION	OPP	OPPOSITE	VAR	VARIES
ELEC OR ELEC'L	ELECTRICAL	OH	OPPOSITE HAND	VERT	VERTICAL
EMBED	EMBEDMENT	OW	OILY WASTE	W/	WITH
EQUIP	EQUIPMENT	℞	PLATE	W/O	WITHOUT
EW	EACH WAY	P/N	PART NUMBER	WP	WORK POINT
EXIST	EXISTING	PMPCM	POLYMER MODIFIED PORTLAND CEMENT MORTAR	WW	WASTE WATER
EXP	EXPANSION	PI	POST INSTALLED	Y & D	BUREAU OF YARDS & DOCKS
EJ OR EXP JT	EXPANSION JOINT	PSF	POUNDS PER SQUARE FOOT		
FFF	FOAM FILLED FENDER	PSI	POUNDS PER SQUARE INCH		
FO	FUEL OIL	PVC	POLYVINYL CHLORIDE		
FP	FORWARD PERPENDICULAR	PW	POTABLE WATER		
FT	FOOT, FEET	PWC	PUBLIC WORKS COMMAND		
		RD	ROAD		
		REF	REFERENCE		
		REINF	REINFORCED, REINFORCING		

SYM	DESCRIPTION	DATE	APPR
1	MEMORANDUM NO.3	4-15-15	----

NAVFAC

SEAL

A/E INFO

APPROVED

FOR COMMANDER NAVFAC / B.L.T.L.

ACTIVITY

SATISFACTORY TO DATE

DES DAS DRW DAS CHK KW

PROJECT MANAGER H. KING

IPT TECH. BRANCH HEAD S. ZAVOYSKI

CHIEF ENG/ARCH (CORE) KW

DEPARTMENT OF THE NAVY
NAVAL FACILITIES ENGINEERING COMMAND
IPT SOUTH ATLANTIC
AUTEC SITE 1

NAVAL FACILITIES ENGINEERING COMMAND SOUTHEAST
NWAL AIR STATION JACKSONVILLE
ANDROS ISLAND, BAHAMAS

PIER 1902 REPAIRS

GENERAL NOTES AND ABBREVIATIONS

SCALE: SCALE
EPROJECT NO.: 1302903
CONSTR. CONTR. NO. N69450-XX-C-XXXX
NAVFAC DRAWING NO. 15079039
SHEET 14 OF 56
S001

FILE NAME: P:\CBL\project_files\FLORIDA\nas key west (l)h)h00213\autec pier repairs-1302903\working technical files\dwgs\Sheet Files\3 - STRU1902-S-001.dwg LAYOUT NAME: S001 GENERAL NOTES AND ABBREVIATIONS PLOTTED: Friday, April 10, 2015 - 12:50pm USER: douglas.szilagyi

DRAWFORM REVISION: 7 AUGUST 2009

SHEET FORMAT IS 22" X 34". IF PRINTED SHEET IS NOT 22" X 34", THEN IT IS NOT TO SCALE

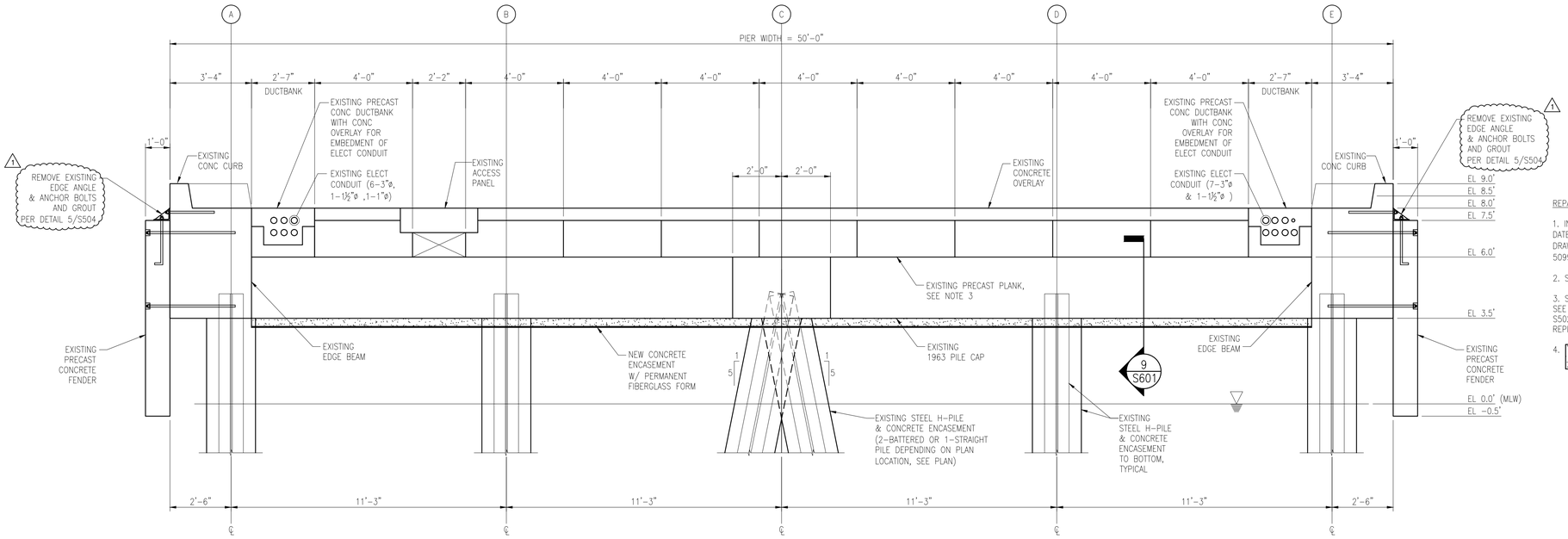

1 TYPICAL REPAIR SECTION AT 1963 PILE CAPS

Scale: 3/8" = 1'-0"

REPAIR AT 1963 PILE CAP BENT NOTES:

1. INFORMATION SHOWN IS BASED ON DRAWINGS BY THOMAS B. BOURNE ASSOCIATES, INC. DATED MAY 5, 1963 (BUREAU OF YARDS AND DOCKS DRAWINGS 975739 TO 975739) AND DRAWINGS BY NAVFAC SOUTHERN DIVISION DATED NOVEMBER 1, 1982 (NAVFAC DRAWINGS 5099652 TO 5099671 AND 5135711).

2. SEE SHEET S401 FOR INFORMATION NOT SHOWN.

3. SOME PRECAST PLANKS NEED TO BE REPLACED BUT ARE NOT SHOWN IN THIS SECTION. SEE PLANS ON SHEETS S504-S206 FOR ALL REPLACEMENT PLANK LOCATIONS. SEE SHEETS S502 AND S503 FOR PLANK REPLACEMENT SECTIONS AND SHEETS S504 AND S505 FOR PLANK REPLACEMENT DETAILS.

4. INDICATES NEW CAST-IN-PLACE CONCRETE FILL.

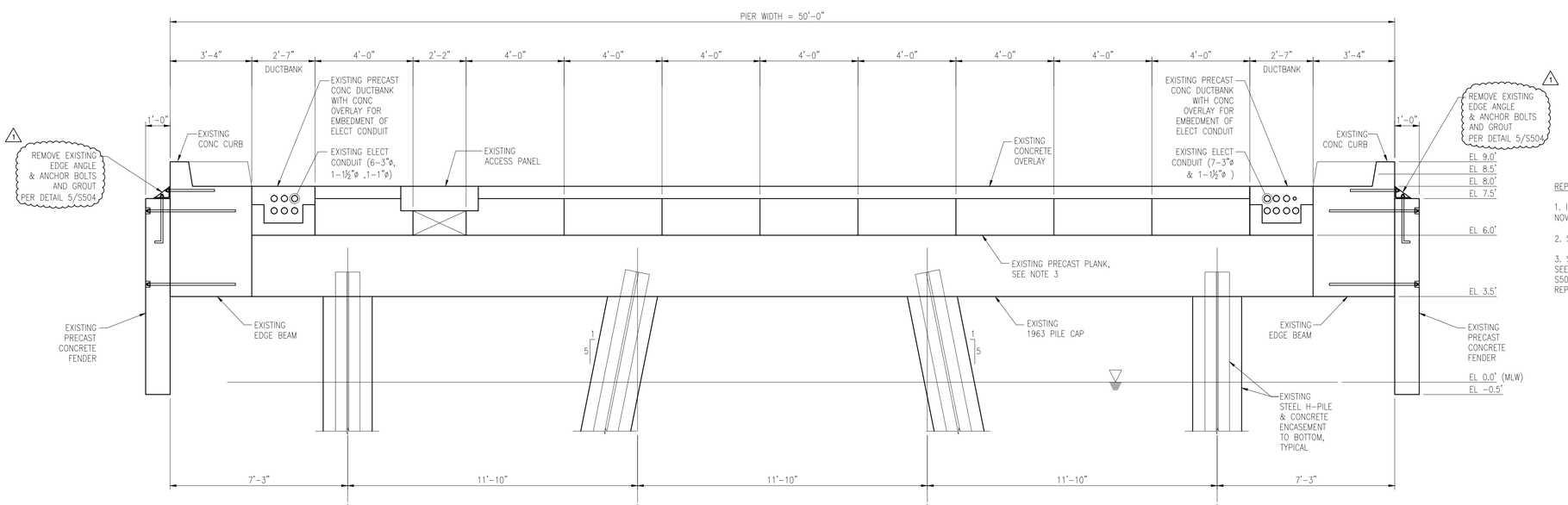

2 TYPICAL REPAIR SECTION AT 1982 PILE CAPS

Scale: 3/8" = 1'-0"

REPAIR AT 1982 PILE CAP BENT NOTES:

1. INFORMATION SHOWN IS BASED ON DRAWINGS BY NAVFAC SOUTHERN DIVISION DATED NOVEMBER 1, 1982 (NAVFAC DRAWINGS 5099652 TO 5099671 AND 5135711).

2. SEE SHEET S401 FOR INFORMATION NOT SHOWN.

3. SOME PRECAST PLANKS NEED TO BE REPLACED BUT ARE NOT SHOWN IN THIS SECTION. SEE PLANS ON SHEETS S504-S206 FOR ALL REPLACEMENT PLANK LOCATIONS. SEE SHEETS S502 AND S503 FOR PLANK REPLACEMENT SECTIONS AND SHEETS S504 AND S505 FOR PLANK REPLACEMENT DETAILS.

SYM	DESCRIPTION	DATE	APPR
MEMORANDUM NO.3		4-15-15	

SEAL

A/E INFO

APPROVED

FOR COMMANDER NAVFAC / B.I.T.L.

ACTIVITY

SATISFACTORY TO DATE

DES DAS DRW DAS CHK KW

PROJECT MANAGER H. KING

IPT TECH. BRANCH HEAD S. ZAVOYSKI

CHIEF ENG/ARCH (CORE) KW

DEPARTMENT OF THE NAVY
IPT SOUTH ATLANTIC
NAVAL FACILITIES ENGINEERING COMMAND
NAVAL FACILITIES ENGINEERING COMMAND SOUTHEAST
NAVAL AIR STATION, JACKSONVILLE
AUTEC SITE 1
ANDROS ISLAND, BAHAMAS

PIER 1902 REPAIRS

REPAIR SECTIONS AND DETAILS

SCALE: SCALE

EPROJECT NO.: 1302903

CONSTR. CONTR. NO. N69450-XX-C-XXXX

NAVFAC DRAWING NO. 15079067

SHEET 42 OF 56

S501

DRAWFORM REVISION: 7 AUGUST 2009

SHEET FORMAT IS 22" X 34". IF PRINTED SHEET IS NOT 22" X 34", THEN IT IS NOT TO SCALE

FILE NAME: P:\CBL\project_files\FLORIDA\nas key west f(b)hjh00213\autec pier repairs-1302903\working technical files\Dwgs\Sheet Files\3 - STRU1902-S-501.dwg LAYOUT NAME: 1902-S-501 PLOTTED: Friday, April 10, 2015 - 10:53am USER: douglas.szilagyi

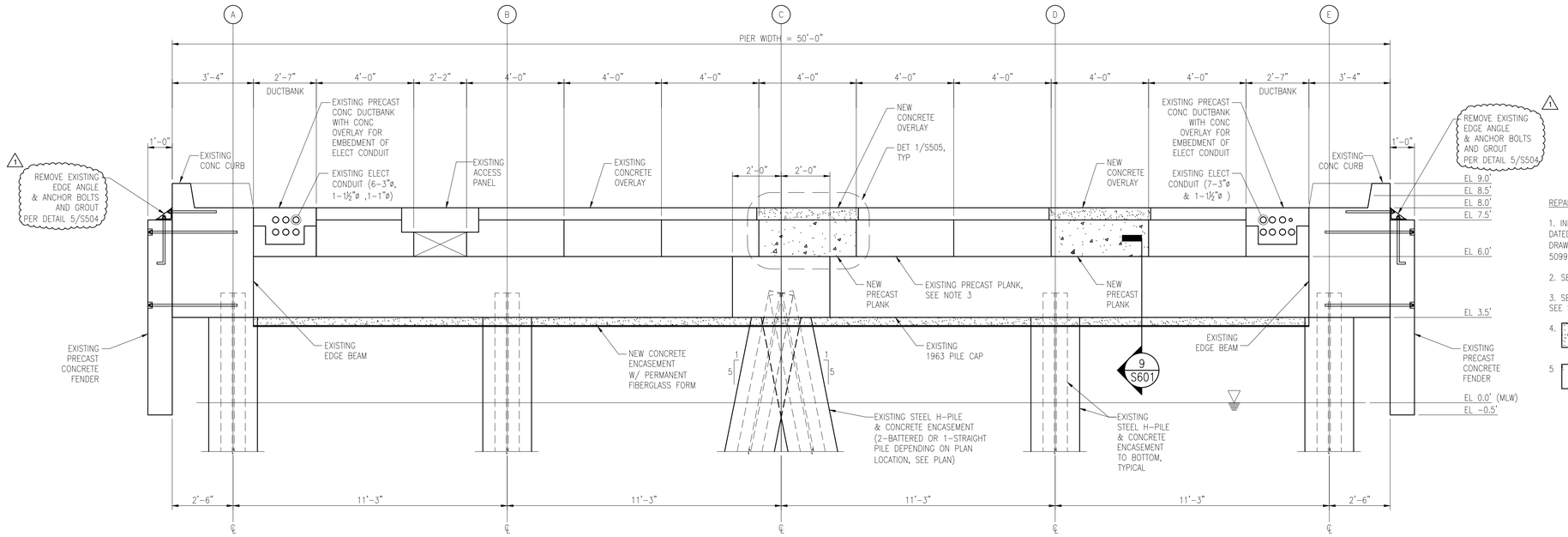

1 REPAIR SECTION
Scale: 3/8" = 1'-0"

REPAIR AT 1963 PILE CAP BENT NOTES:

1. INFORMATION SHOWN IS BASED ON DRAWINGS BY THOMAS B. BOURNE ASSOCIATES, INC. DATED MAY 5, 1963 (BUREAU OF YARDS AND DOCKS DRAWINGS 975739 TO 975739) AND DRAWINGS BY NAVFAC SOUTHERN DIVISION DATED NOVEMBER 1, 1982 (NAVFAC DRAWINGS 5099652 TO 5099671 AND 5135711).

2. SEE SHEET S401 FOR INFORMATION NOT SHOWN.

3. SEE PLANS ON SHEETS S204-S206 FOR ALL REPLACEMENT PLANK LOCATIONS. SEE SHEETS S504 AND S505 FOR PLANK REPLACEMENT SECTIONS AND DETAILS.

4. INDICATES NEW CAST-IN-PLACE CONCRETE.

5. INDICATES NEW PRECAST CONCRETE.

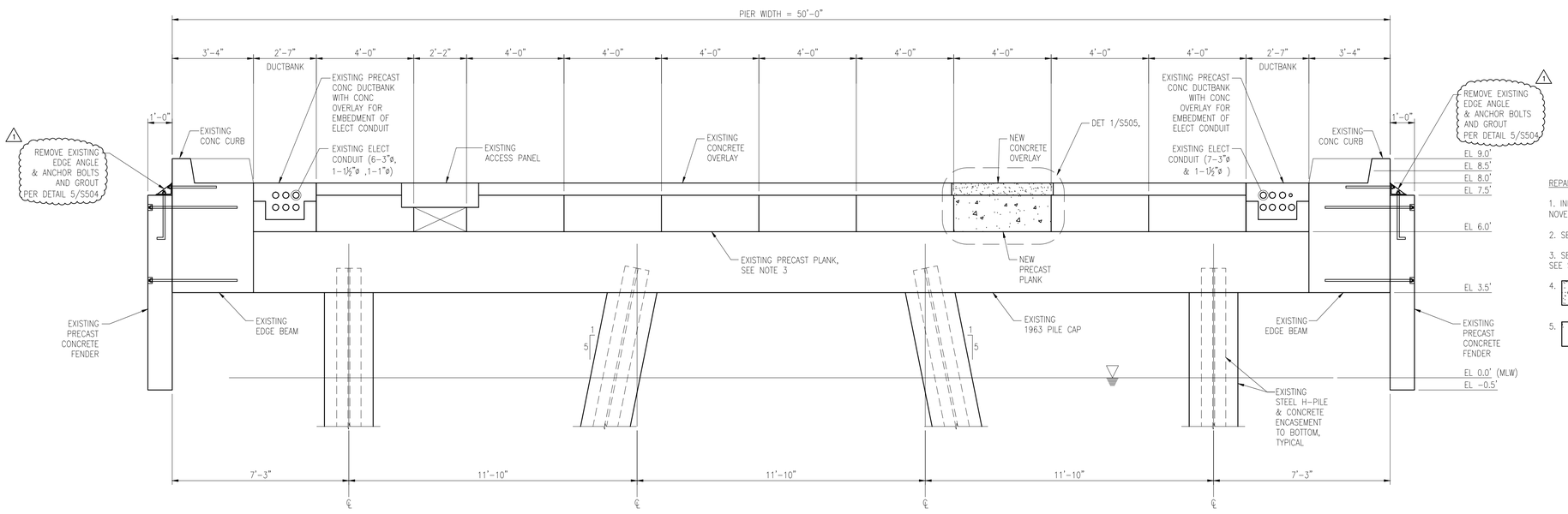

2 REPAIR SECTION
Scale: 3/8" = 1'-0"

REPAIR AT 1982 PILE CAP BENT NOTES:

1. INFORMATION SHOWN IS BASED ON DRAWINGS BY NAVFAC SOUTHERN DIVISION DATED NOVEMBER 1, 1982 (NAVFAC DRAWINGS 5099652 TO 5099671 AND 5135711).

2. SEE SHEET S401 FOR INFORMATION NOT SHOWN.

3. SEE PLANS ON SHEETS S204-S206 FOR ALL REPLACEMENT PLANK LOCATIONS. SEE SHEETS S504 AND S505 FOR PLANK REPLACEMENT SECTIONS AND DETAILS.

4. INDICATES NEW CAST-IN-PLACE CONCRETE.

5. INDICATES NEW PRECAST CONCRETE.

AMENDMENT NO.3									
1	----	----	----	----	----	----	----	4-13-15	----
SYM	DESCRIPTION							DATE	APPR

NAVFAC

SEAL

A/E INFO

APPROVED

FOR COMMANDER NAVFAC / B.L.T.L.

ACTIVITY

SATISFACTORY TO DATE

DES DAS DRW DAS CHK KW

PROJECT MANAGER H. KING

IPT TECH. BRANCH HEAD S. ZAVOYSKI

CHIEF ENG/ARCH (CORE) KW

DEPARTMENT OF THE NAVY
NAVAL FACILITIES ENGINEERING COMMAND
NAVAL FACILITIES ENGINEERING COMMAND SOUTHEAST
NAVAL AIR STATION JACKSONVILLE
IPT SOUTH ATLANTIC
AUTEC SITE 1
ANDROS ISLAND, BAHAMAS

PIER 1902 REPAIRS

REPAIR SECTIONS AND DETAILS

SCALE: SCALE

EPROJECT NO.: 1302903

CONSTR. CONTR. NO. N69450-XX-C-XXXX

NAVFAC DRAWING NO. 15079068

SHEET 43 OF 56

S502

DRAWFORM REVISION: 7 AUGUST 2009

SHEET FORMAT IS 22" X 34". IF PRINTED SHEET IS NOT 22" X 34", THEN IT IS NOT TO SCALE

FILE NAME: P:\CIBL\project_files\FLORIDA\vaa key west il)hjh00213\autec pier repairs-1302903\working technical files\hwgs\Sheet Files\3 - STRU1902-S-502.dwg LAYOUT NAME: 1902-S-502 PLOTTED: Friday, April 10, 2015 - 10:53am USER: douglas.szilagyi

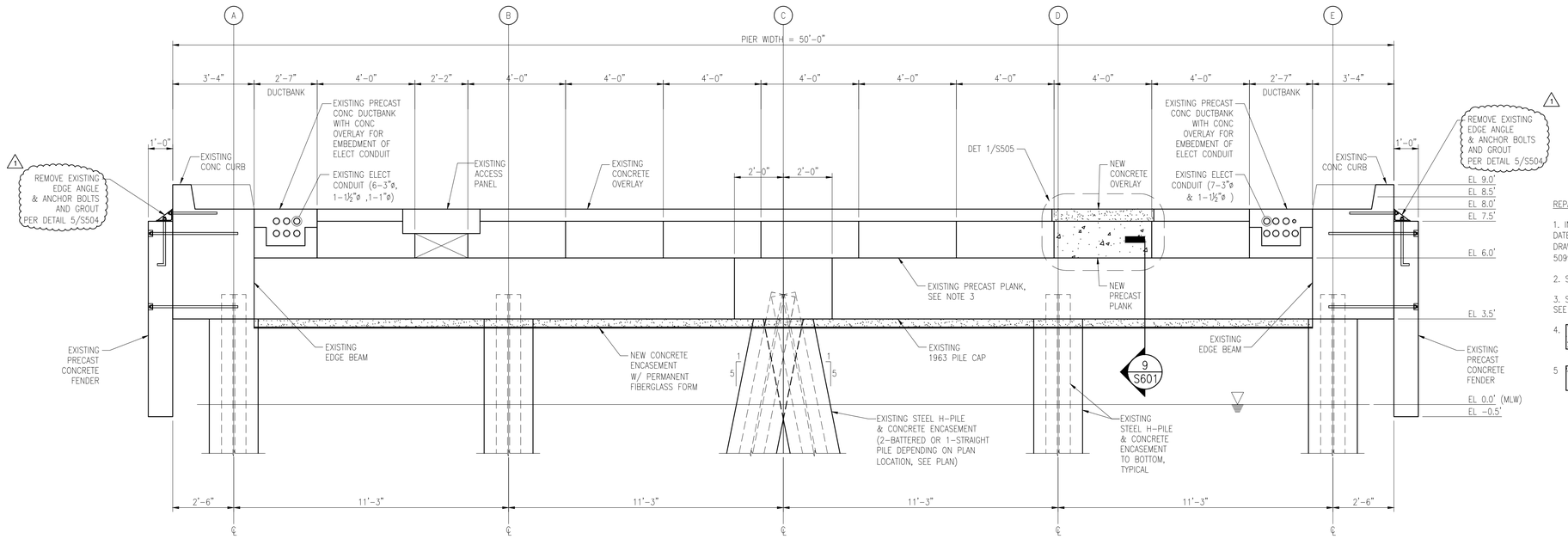

1 REPAIR SECTION
Scale: 3/8" = 1'-0"

REPAIR AT 1963 PILE CAP BENT NOTES:

1. INFORMATION SHOWN IS BASED ON DRAWINGS BY THOMAS B. BOURNE ASSOCIATES, INC. DATED MAY 5, 1963 (BUREAU OF YARDS AND DOCKS DRAWINGS 975739 TO 975739) AND DRAWINGS BY NAVFAC SOUTHERN DIVISION DATED NOVEMBER 1, 1982 (NAVFAC DRAWINGS 5099652 TO 5099671 AND 5135711).

2. SEE SHEET S401 FOR INFORMATION NOT SHOWN.

3. SEE PLANS ON SHEETS S204-S206 FOR ALL REPLACEMENT PLANK LOCATIONS. SEE SHEETS S504 AND S505 FOR PLANK REPLACEMENT SECTIONS AND DETAILS.

4. INDICATES NEW CAST-IN-PLACE CONCRETE.

5. INDICATES NEW PRECAST CONCRETE.

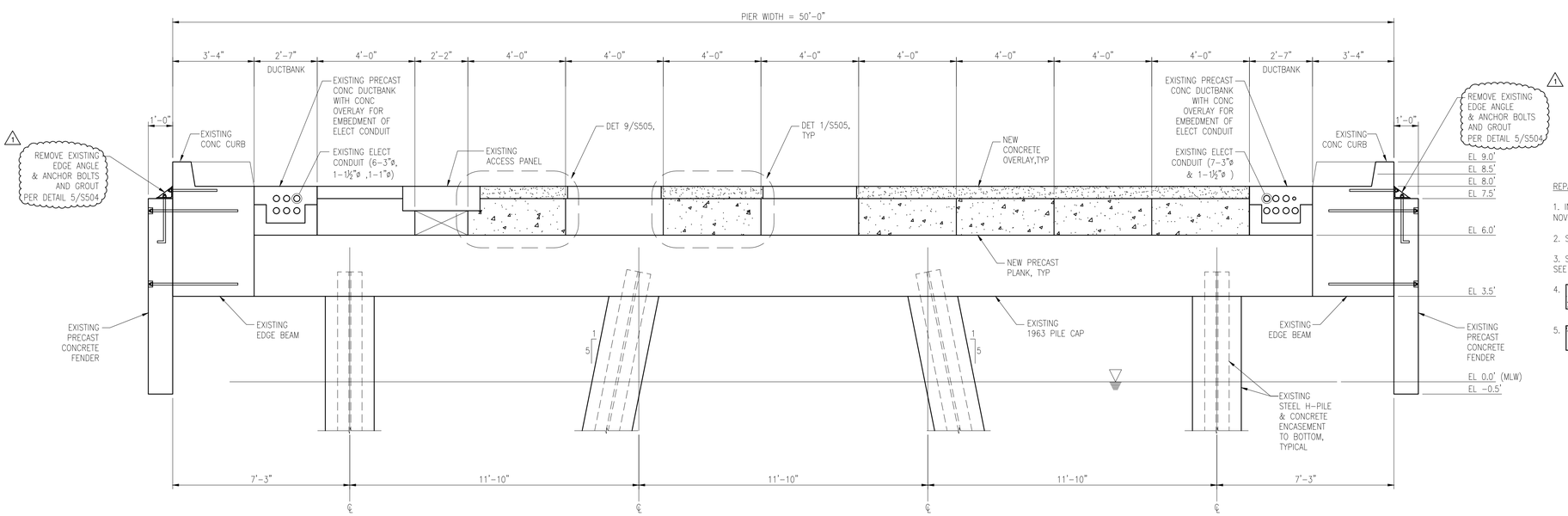

2 REPAIR SECTION
Scale: 3/8" = 1'-0"

REPAIR AT 1982 PILE CAP BENT NOTES:

1. INFORMATION SHOWN IS BASED ON DRAWINGS BY NAVFAC SOUTHERN DIVISION DATED NOVEMBER 1, 1982 (NAVFAC DRAWINGS 5099652 TO 5099671 AND 5135711).

2. SEE SHEET S401 FOR INFORMATION NOT SHOWN.

3. SEE PLANS ON SHEETS S204-S206 FOR ALL REPLACEMENT PLANK LOCATIONS. SEE SHEETS S504 AND S505 FOR PLANK REPLACEMENT SECTIONS AND DETAILS.

4. INDICATES NEW CAST-IN-PLACE CONCRETE.

5. INDICATES NEW PRECAST CONCRETE.

AMENDMENT NO.3									
1	STM	DESCRIPTION	DATE	APPR
	----	----	----	----
	----	----	----	----
	----	----	----	----
	----	----	----	----
	----	----	----	----
	----	----	4-13-15	----

NAVFAC

SEAL

A/E INFO

APPROVED

FOR COMMANDER NAVFAC / B.L.T.L.

ACTIVITY

SATISFACTORY TO DATE

DES DAS DRW DAS CHK KW

PROJECT MANAGER H. KING

IPT TECH. BRANCH HEAD S. ZAVOYSKI

CHIEF ENG/ARCH (CORE) KW

DEPARTMENT OF THE NAVY
NAVAL FACILITIES ENGINEERING COMMAND SOUTHEAST
NAVAL FACILITIES ENGINEERING COMMAND
NAVAL AIR STATION JACKSONVILLE
IPT SOUTH ATLANTIC
ANDROS ISLAND, BAHAMAS
AUTEC SITE 1

PIER 1902 REPAIRS

REPAIR SECTIONS AND DETAILS

SCALE: SCALE

EPROJECT NO.: 1302903

CONSTR. CONTR. NO. N69450-XX-C-XXXX

NAVFAC DRAWING NO. 15079069

SHEET 44 OF 56

S503

DRAWFORM REVISION: 7 AUGUST 2009

SHEET FORMAT IS 22" X 34". IF PRINTED SHEET IS NOT 22" X 34", THEN IT IS NOT TO SCALE

FILE NAME: P:\CBL\project_files\FLORIDA\vpas key west ll\hjh00213\autec pier repairs-1302903\working technical files\Dwgs\Sheet Files\S - STRU1902 -S-503.dwg LAYOUT NAME: 1902 -S-503 PLOTTED: Friday, April 10, 2015 - 10:53am USER: douglas.schlagel

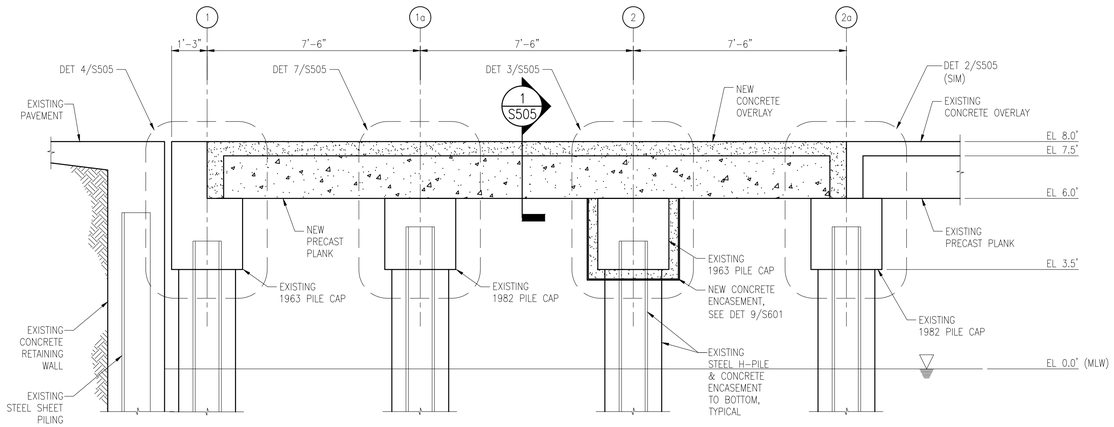

1 PRECAST PLANK REPLACEMENT AT SHORE END
Scale: 3/8" = 1'-0"

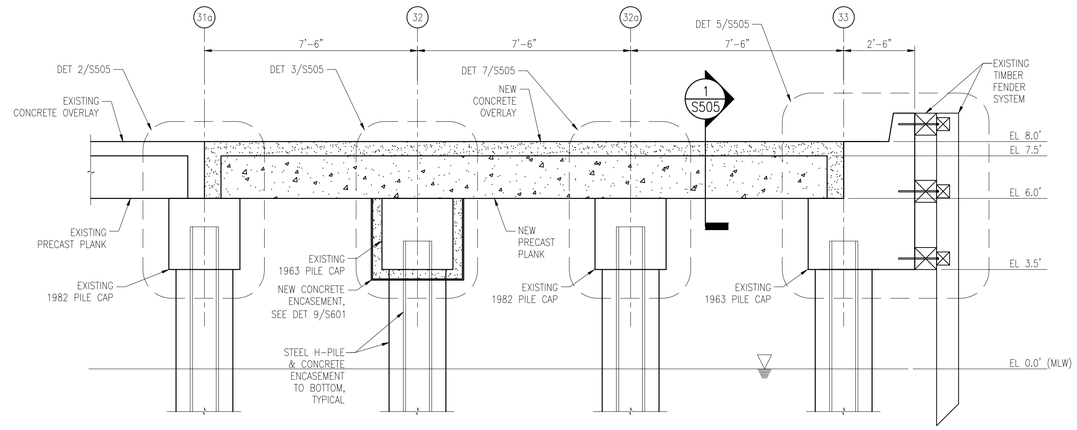

2 PRECAST PLANK REPLACEMENT AT PIER END
Scale: 3/8" = 1'-0"

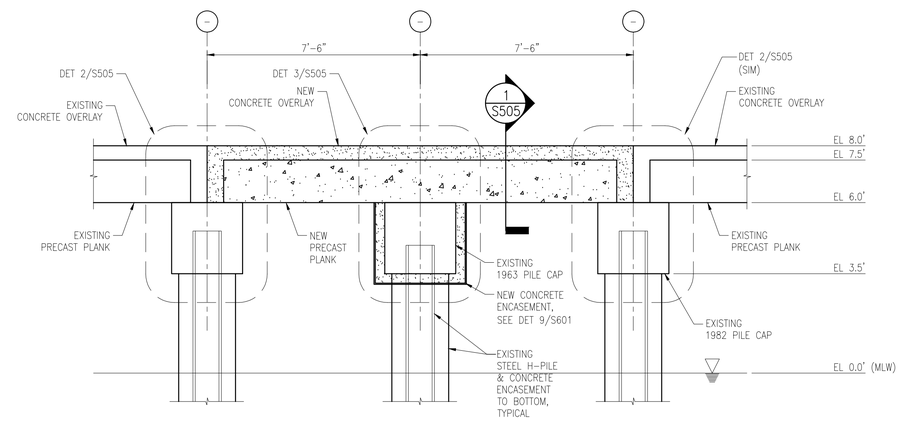

3 PRECAST PLANK REPLACEMENT
Scale: 3/8" = 1'-0"

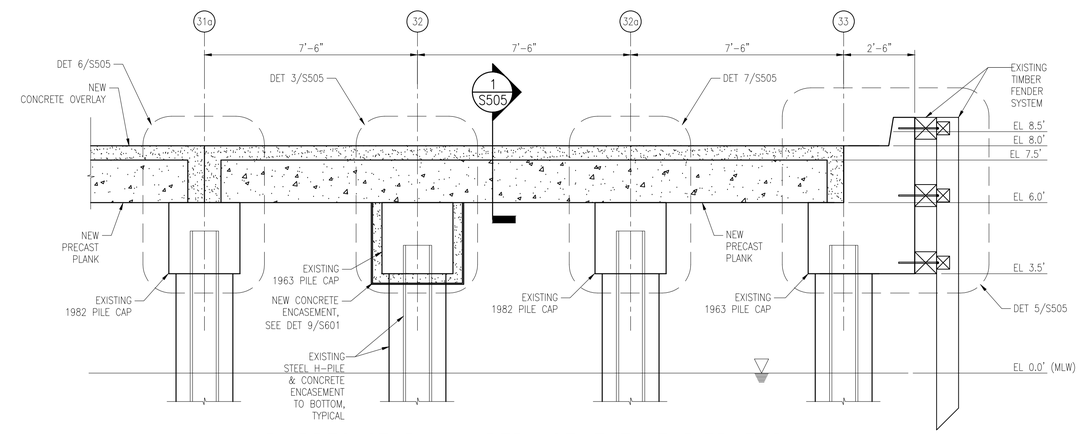

4 PRECAST PLANK REPLACEMENT AT PIER END
Scale: 3/8" = 1'-0"

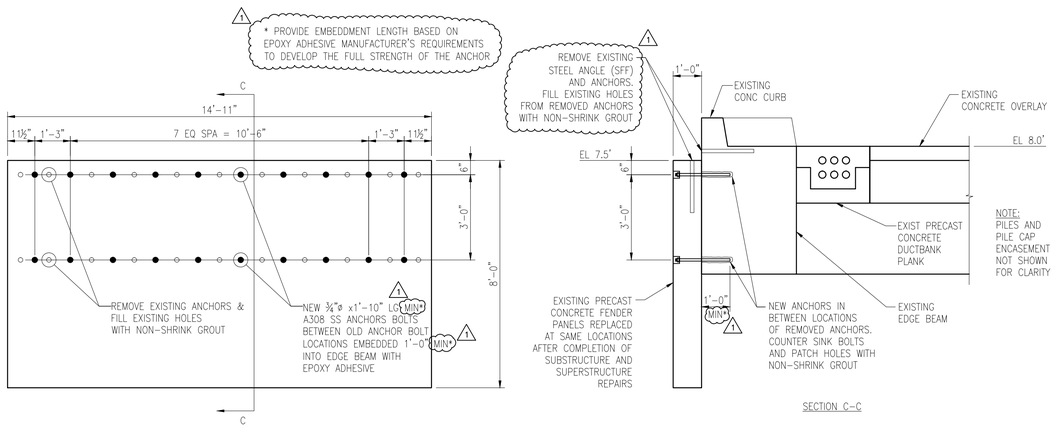

5 EXISTING CONCRETE FENDER REINSTALLATION DETAIL
Scale: 3/8" = 1'-0"

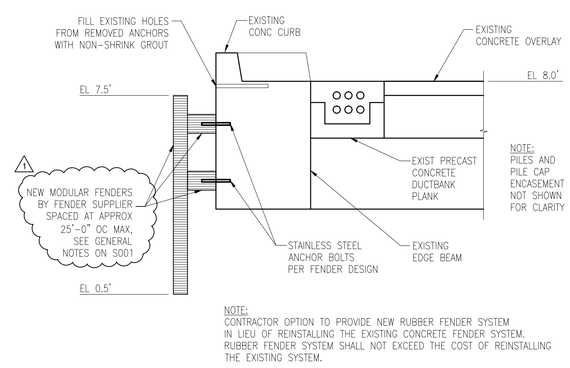

NOTE:
CONTRACTOR OPTION TO PROVIDE NEW RUBBER FENDER SYSTEM IN LIEU OF REINSTALLING THE EXISTING CONCRETE FENDER SYSTEM. RUBBER FENDER SYSTEM SHALL NOT EXCEED THE COST OF REINSTALLING THE EXISTING SYSTEM.

6 TYPICAL RUBBER FENDER DETAIL (OPTION)
Scale: 3/8" = 1'-0"

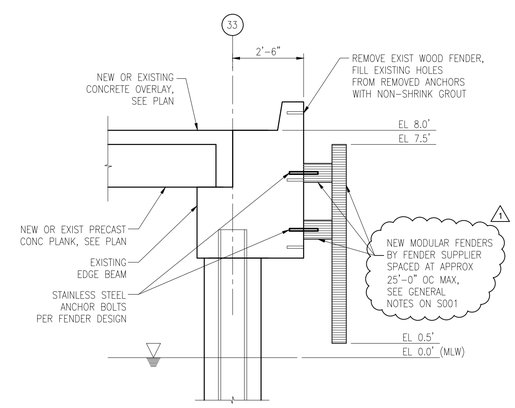

7 RUBBER FENDER DETAIL AT PIER END
Scale: 3/8" = 1'-0"

SYM	DESCRIPTION	DATE	APPR
MEMORANDUM NO.3		4-15-15	

NAVFAC

SEAL

A/E INFO

APPROVED
FOR COMMANDER NAVFAC / B.L.T.L.
ACTIVITY
SATISFACTORY TO DATE

DES DAS DRW DAS CHK KW
PROJECT MANAGER H. KING
IPT TECH. BRANCH HEAD S. ZAVOYSKI
CHIEF ENG/ARCH (CORE) KW

DEPARTMENT OF THE NAVY
NAVAL FACILITIES ENGINEERING COMMAND
NAVAL FACILITIES ENGINEERING COMMAND SOUTHEAST
NAVAL AIR STATION JACKSONVILLE
IPT SOUTH ATLANTIC
AUTEC SITE 1
ANDROS ISLAND, BAHAMAS
PIER 1902 REPAIRS
REPAIR SECTIONS AND DETAILS

SCALE: SCALE
EPROJECT NO.: 1302903
CONSTR. CONTR. NO. N69450-XX-C-XXXX
NAVFAC DRAWING NO. 15079070
SHEET 45 OF 56
S504

DRAWFORM REVISION: 7 AUGUST 2009

FILE NAME: P:\CIBL\project_files\FLORIDA\nas key west it\hj\n00213\autec pier repairs-1302903\working technical files\dwgs\Sheet Files\3 - STRU1902-S-504.dwg LAYOUT NAME: 1902-S-504 PLOTTED: Friday, April 10, 2015 - 12:50pm USER: douglas.szilagyi

SHEET FORMAT IS 22" X 34". IF PRINTED SHEET IS NOT 22" X 34", THEN IT IS NOT TO SCALE

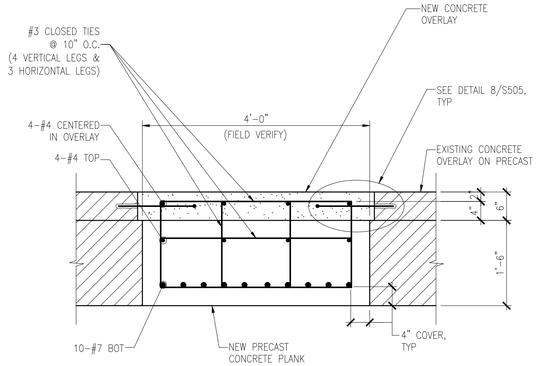

1 PRECAST PLANK DETAIL
Scale: 3/4" = 1'-0"

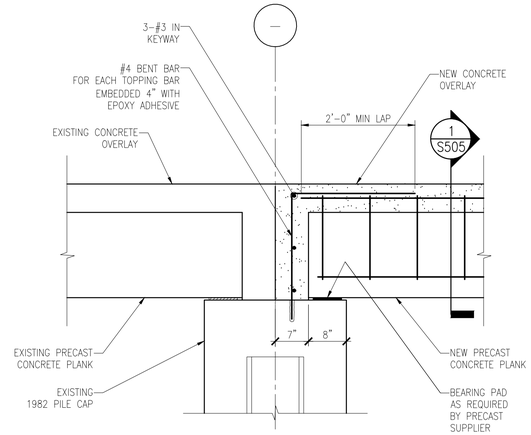

2 PRECAST PLANK END BEARING
Scale: 3/4" = 1'-0"

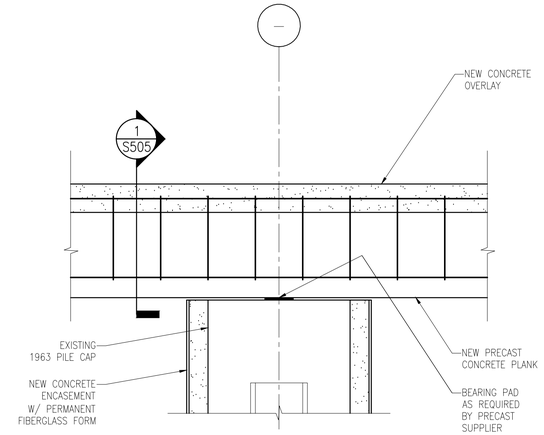

3 PRECAST PLANK MID BEARING
Scale: 3/4" = 1'-0"

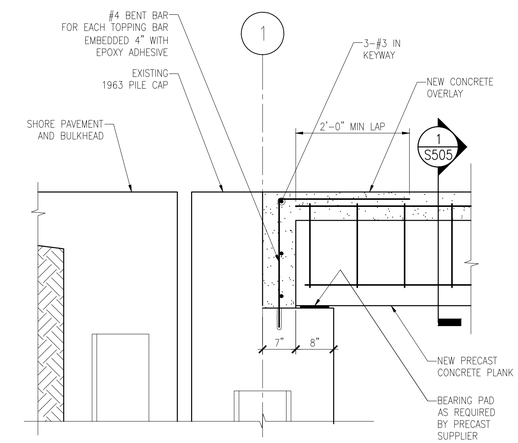

4 PRECAST PLANK AT SHORE END
Scale: 3/4" = 1'-0"

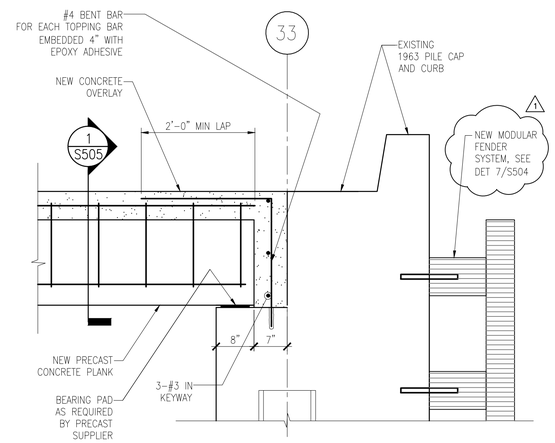

5 INBOARD PRECAST PLANK AT PIER END
Scale: 3/4" = 1'-0"

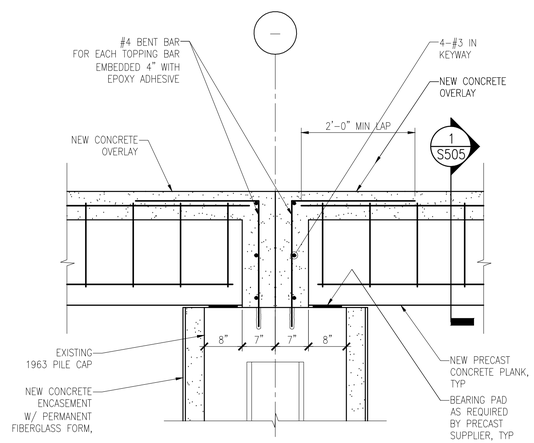

6 PRECAST PLANK AT END BEARING
Scale: 3/4" = 1'-0"

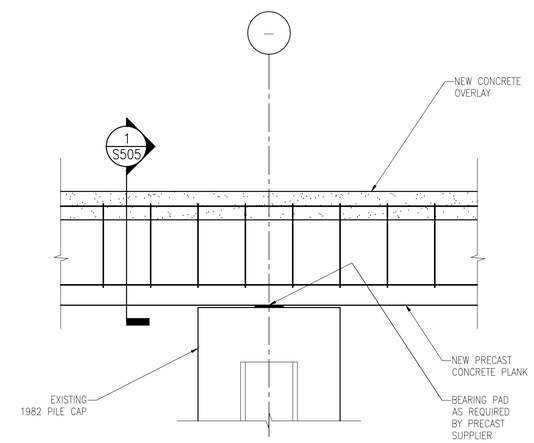

7 PRECAST PLANK AT MID BEARING
Scale: 3/4" = 1'-0"

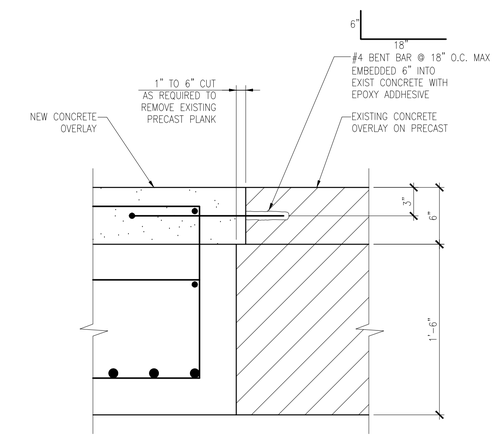

8 PRECAST PLANK JOINT DETAIL
Scale: 3/4" = 1'-0"

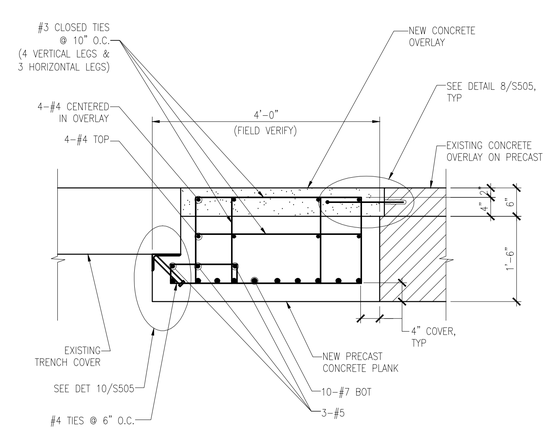

9 PRECAST PLANK AT ACCESS PANEL
Scale: 3/4" = 1'-0"

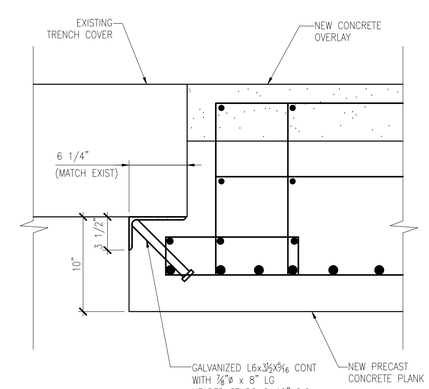

10 PRECAST PLANK DETAIL
Scale: 3/4" = 1'-0"

SYM	DESCRIPTION	DATE	APPR
---	---	---	---
---	---	---	---
---	---	---	---
---	---	---	---
---	---	---	---
---	---	---	---
---	---	---	---
---	---	4-15-15	---

AMENDMENT NO.3

NAVFAC

SEAL

A/E INFO

APPROVED

FOR COMMANDER NAVFAC / B.L.T.L.

ACTIVITY

SATISFACTORY TO DATE

DES DAS DRW DAS CHK KW

PROJECT MANAGER H. KING

IPT TECH. BRANCH HEAD S. ZAVOYSKI

CHIEF ENG/ARCH (CORE) KW

DEPARTMENT OF THE NAVY
NAVAL FACILITIES ENGINEERING COMMAND
IPT SOUTH ATLANTIC
AUTEC SITE 1

NAVAL FACILITIES ENGINEERING COMMAND
NAVAL FACILITIES ENGINEERING COMMAND SOUTHEAST
NAVAL AIR STATION JACKSONVILLE
ANDROS ISLAND, BAHAMAS

PIER 1902 REPAIRS

REPAIR SECTION AND DETAILS

SCALE: SCALE

EPROJECT NO.: 1302903

CONSTR. CONTR. NO. N69450-XX-C-XXXX

NAVFAC DRAWING NO. 15079071

SHEET 46 OF 56

S505

DRAWFORM REVISION: 7 AUGUST 2009

FILE NAME: P:\CBR\project_files\FLORIDA\yoss key west ff\hj\00213\autec per repairs-1302903\working technical files\Dwgs\Sheet Files\3 - STRU1902-S-505.dwg LAYOUT NAME: 1902-S-505 PLOTTED: Tuesday, April 14, 2015 - 7:33am USER: douglas.szilagyi

SHEET FORMAT IS 22" X 34". IF PRINTED SHEET IS NOT 22" X 34", THEN IT IS NOT TO SCALE

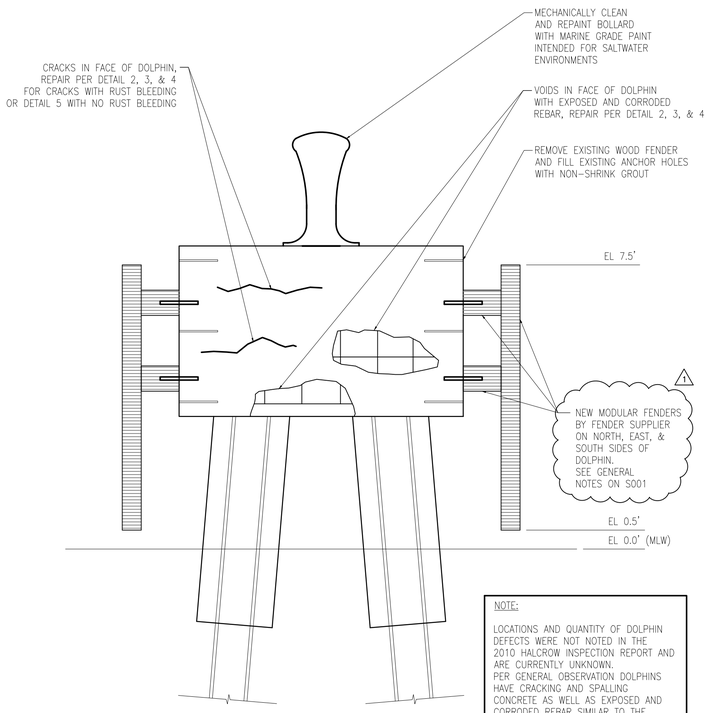

NOTE:

LOCATIONS AND QUANTITY OF DOLPHIN DEFECTS WERE NOT NOTED IN THE 2010 HALCROW INSPECTION REPORT AND ARE CURRENTLY UNKNOWN. PER GENERAL OBSERVATION DOLPHINS HAVE CRACKING AND SPALLING CONCRETE AS WELL AS EXPOSED AND CORRODED REBAR SIMILAR TO THE 1963 PILE CAPS. ASSUME THE FOLLOWING FOR BIDDING PURPOSES:

1. 25% OF THE DOLPHIN SURFACE HAS CONCRETE SPALLING WITH EXPOSED AND CORRODED REBAR.
2. 50% OF THE DOLPHIN SURFACE HAS CRACKED CONCRETE.
3. 50% OF THE CRACKING HAS RUST BLEEDING.

1 TYPICAL DOLPHIN REPAIR ELEVATION
Scale: 1/2" = 1'-0"

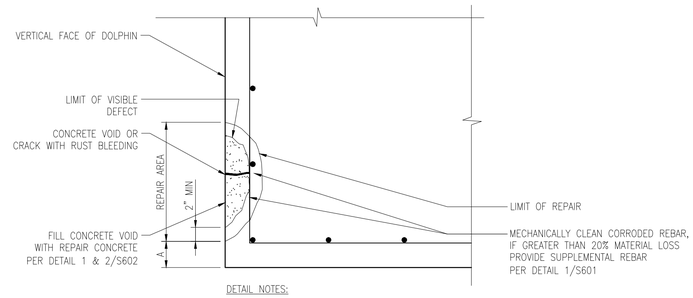

DETAIL NOTES:

1. REMOVE ALL LOOSE AND CRACKED CONCRETE DOWN TO SOUND CONCRETE IN THE AREA OF REPAIR.
2. IF 'A' IS LESS THAN 4" THEN REMOVE CONCRETE DOWN TO BOTTOM OF THE BEAM
3. FOR VOIDS WITH EXPOSED REBAR AND CRACKS WITH RUST BLEEDING REMOVE CONCRETE PAST REBAR AS INDICATED.
4. FOR CRACKS WITHOUT RUST BLEEDING SEE DETAIL 5/S506.
5. FOR VOIDS AND CRACKS W/ RUST BLEEDING AT BOTTOM OF BEAM SEE DETAIL 3 & 4/S506.

2 DOLPHIN VERTICAL FACE REPAIR
Scale: 1" = 1'-0"

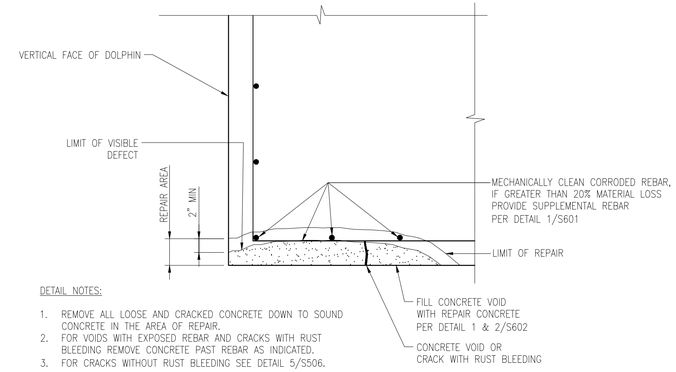

DETAIL NOTES:

1. REMOVE ALL LOOSE AND CRACKED CONCRETE DOWN TO SOUND CONCRETE IN THE AREA OF REPAIR.
2. FOR VOIDS WITH EXPOSED REBAR AND CRACKS WITH RUST BLEEDING REMOVE CONCRETE PAST REBAR AS INDICATED.
3. FOR CRACKS WITHOUT RUST BLEEDING SEE DETAIL 5/S506.

3 DOLPHIN UNDERSIDE REPAIR
Scale: 1" = 1'-0"

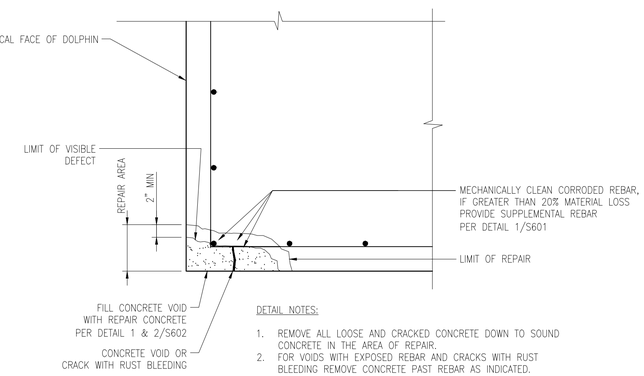

DETAIL NOTES:

1. REMOVE ALL LOOSE AND CRACKED CONCRETE DOWN TO SOUND CONCRETE IN THE AREA OF REPAIR.
2. IF VOIDS WITH EXPOSED REBAR AND CRACKS WITH RUST BLEEDING REMOVE CONCRETE PAST REBAR AS INDICATED.
3. FOR CRACKS WITHOUT RUST BLEEDING SEE DETAIL 5/S506.

4 DOLPHIN CORNER REPAIR
Scale: 1" = 1'-0"

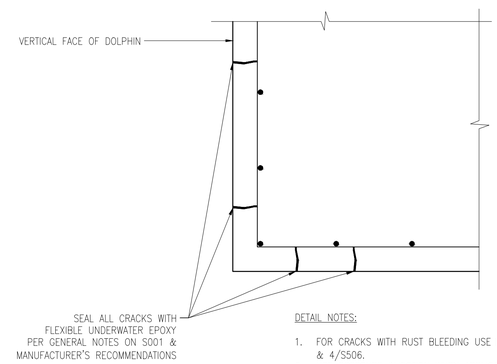

DETAIL NOTES:

1. FOR CRACKS WITH RUST BLEEDING USE DETAILS 2/S506, 3/S506, & 4/S506.
2. USE PRESSURE INJECTION WHEN APPLICABLE PER MANUFACTURER'S RECOMMENDATIONS.
3. CRACKS GREATER THAN 1/16" SHALL BE ROUTED PER MANUFACTURER'S RECOMMENDATIONS.

5 DOLPHIN CRACK REPAIR (NO RUST BLEEDING)
Scale: 1" = 1'-0"

SYM	DESCRIPTION	DATE	APPR
MEMORANDUM NO.3		4-15-15	

NAVFAC

SEAL

A/E INFO

APPROVED

FOR COMMANDER NAVFAC / B.L.T.L.

ACTIVITY

SATISFACTORY TO DATE

DES DAS DRW DAS CHK KW

PROJECT MANAGER H. KING

IPT TECH. BRANCH HEAD S. ZAVOYSKI

CHIEF ENG/ARCH (CORE) KW

DEPARTMENT OF THE NAVY
NAVAL FACILITIES ENGINEERING COMMAND
NAVAL FACILITIES ENGINEERING COMMAND SOUTHEAST
NAVAL AIR STATION JACKSONVILLE
IPT SOUTH ATLANTIC
AUTEC SITE 1
ANDROS ISLAND, BAHAMAS

PIER 1902 REPAIRS

REPAIR SECTIONS AND DETAILS

SCALE: SCALE

EPROJECT NO.: 1302903

CONSTR. CONTR. NO. N69450-XX-C-XXXX

NAVFAC DRAWING NO. 15079072

SHEET 47 OF 56

S506

DRAWFORM REVISION: 7 AUGUST 2009

FILE NAME: P:\CBL\project_files\FLORIDA\vaas key west il\hjh00213\autec pier repairs-1302903\working technical files\Dwgs\Sheet Files\S - STRU1902-S-506.dwg LAYOUT NAME: 1902-S-506 PLOTTED: Tuesday, April 14, 2015 - 7:33am USER: douglas.szilagyi

SHEET FORMAT IS 22" X 34". IF PRINTED SHEET IS NOT 22" X 34", THEN IT IS NOT TO SCALE

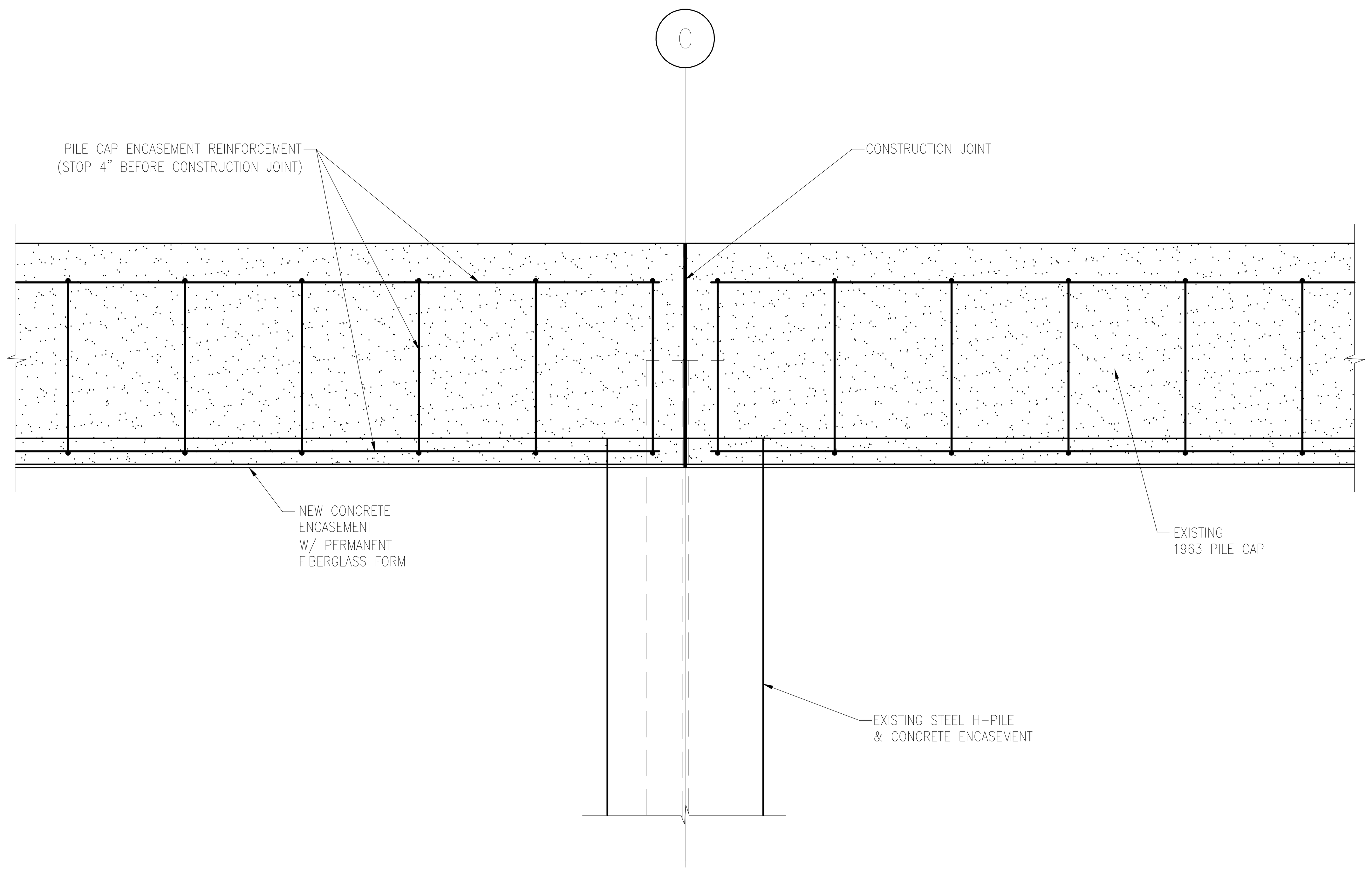

(1) 1963 PILE CAP ENCASEMENT CONSTRUCTION JOINT – GRID 2–5
Scale: 3/4" = 1'–0"

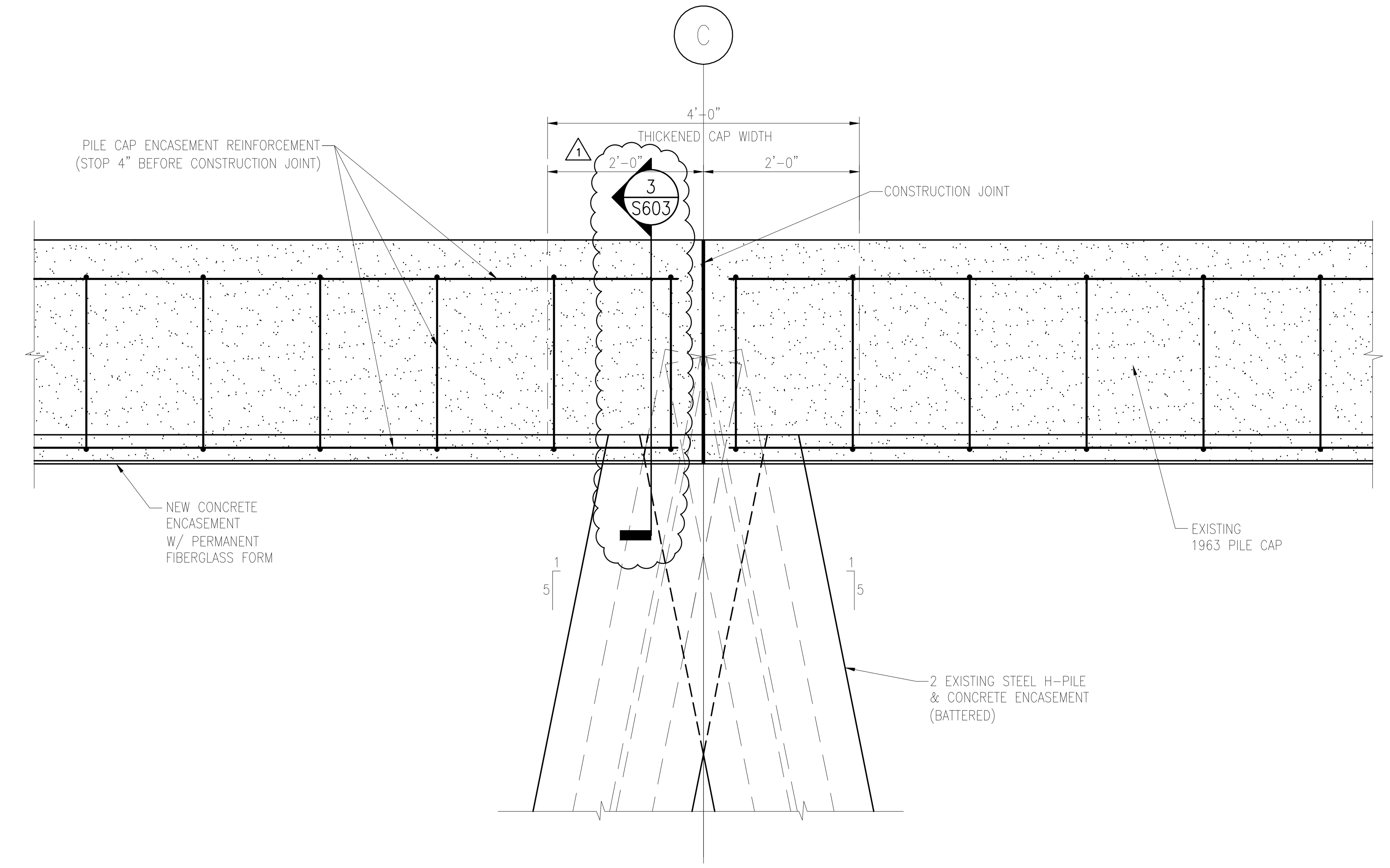

(2) 1963 PILE CAP ENCASEMENT CONSTRUCTION JOINT – GRID 6–32
Scale: 3/4" = 1'–0"

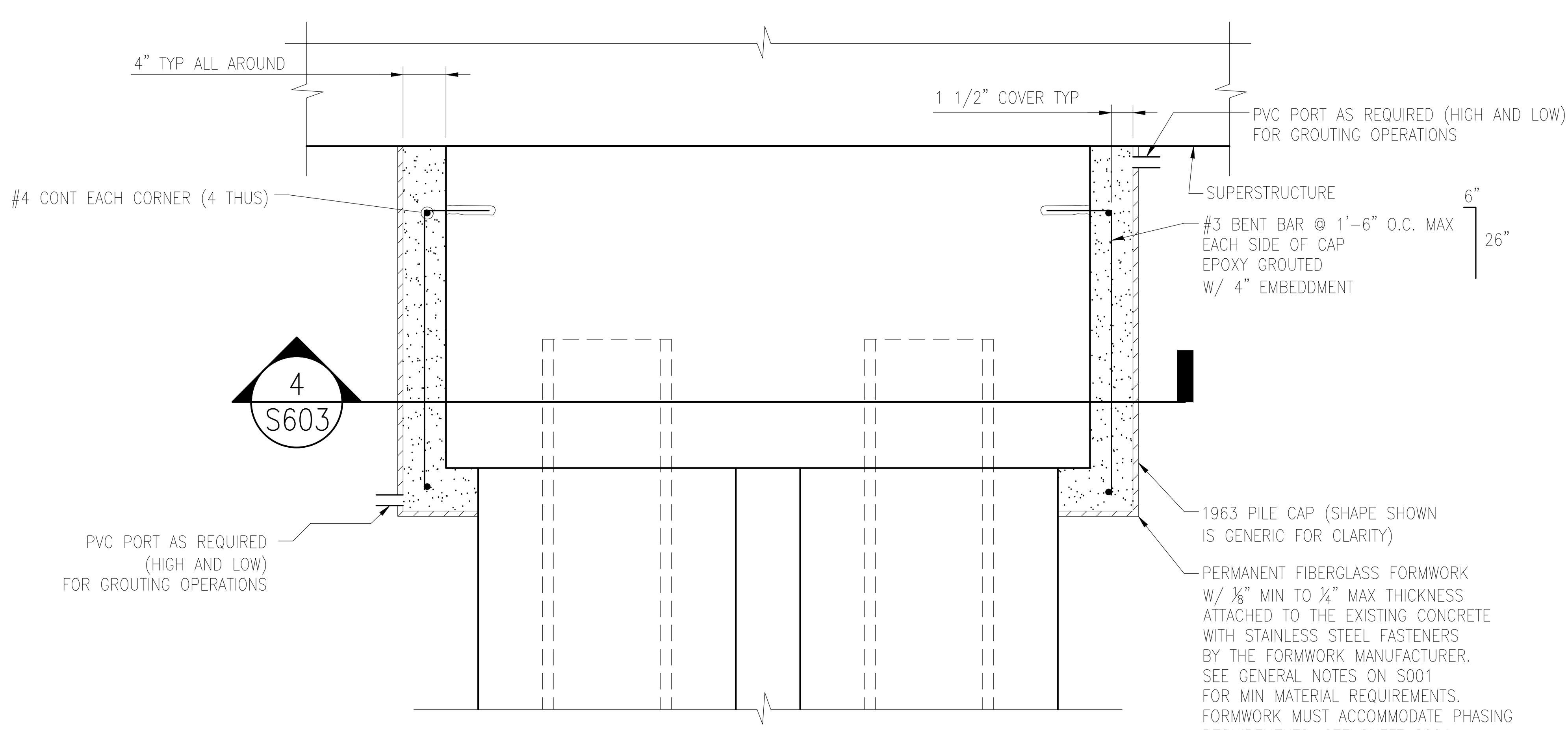

DETAIL NOTES:

1. PILE CAP REBAR NOT SHOWN FOR CLARITY.
2. FOR CONCRETE REPAIRS SEE DETAIL 9/S601

(3) 1963 PILE CAP ENCASEMENT REPAIR @ GRID 'C
Scale: 1" = 1'–0"

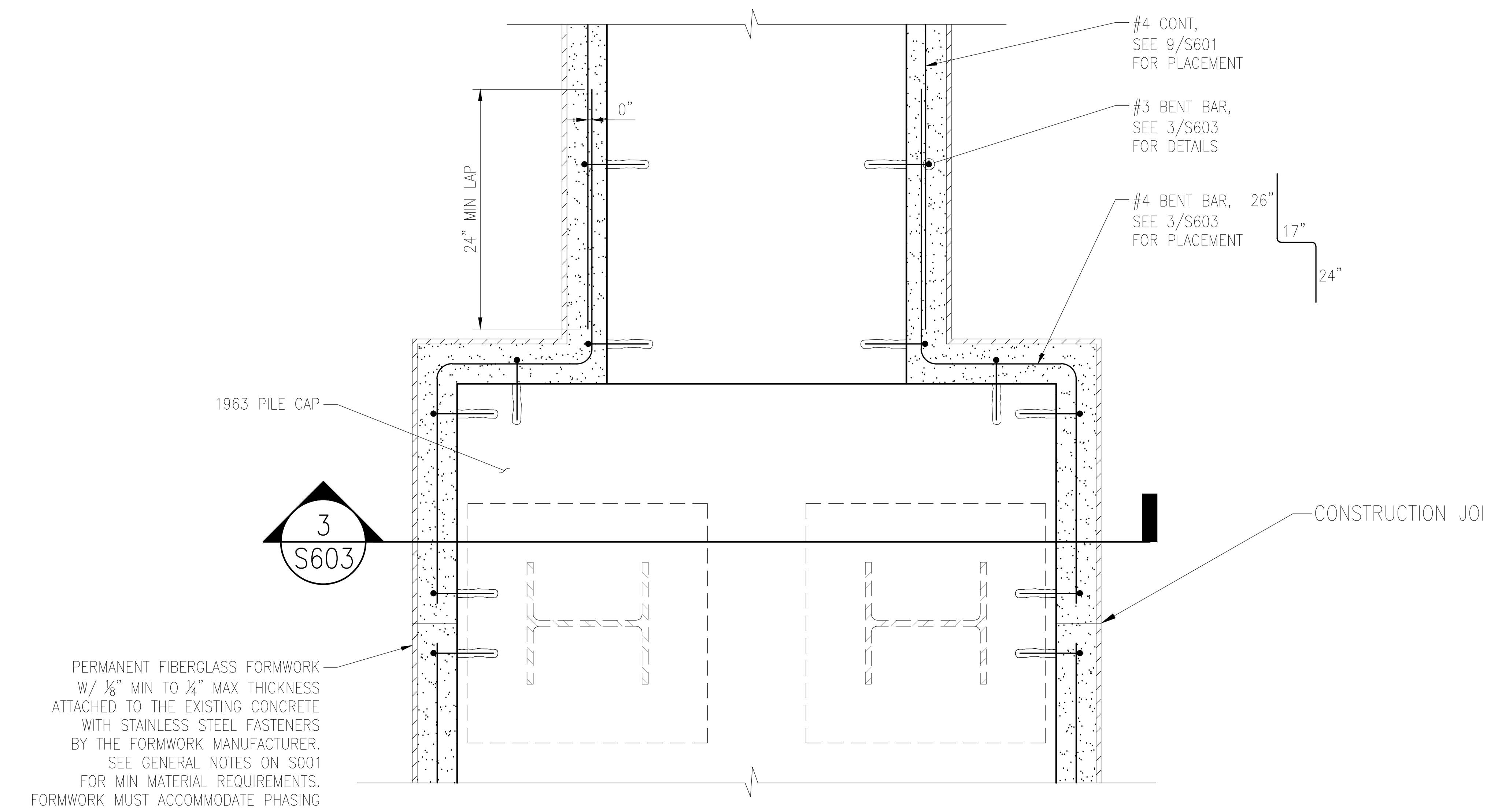

(4) 1963 PILE CAP ENCASEMENT PLAN @ GRID 'C
Scale: 1" = 1'–0"

SYM	DESCRIPTION	DATE	APPR
1	AMENDMENT NO.3	4-13-15	----

NAVFAC

SEAL

A/E INFO

APPROVED

FOR COMMANDER NAVFAC / B.L.T.L.

ACTIVITY

SATISFACTORY TO DATE

DES DAS | DRW DAS | CHK KW
PROJECT MANAGER H. KING
IPT TECH. BRANCH HEAD S. ZAVOYSKI
CHIEF ENG/ARCH (CORE) KW

DEPARTMENT OF THE NAVY
NAVAL FACILITIES ENGINEERING COMMAND
NAVAL FACILITIES ENGINEERING COMMAND SOUTHEAST
IPT SOUTH ATLANTIC
NAVAL AIR STATION JACKSONVILLE
AUTEC SITE 1
ANDROS ISLAND, BAHAMAS

PIER 1902 REPAIRS

REPAIR DETAILS

SCALE: SCALE
EPROJECT NO.: 1302903
CONSTR. CONTR. NO. N69450–XX–C–XXXX
NAVFAC DRAWING NO. 15079075
SHEET 50 OF 56

S603

DRAWFORM REVISION: 7 AUGUST 2009

FILE NAME: P:\CIBL\project_files\FLORIDA\nas key west fl}h}n00213\autec pier repairs~1302903\working technical files\Dwgs\Sheet Files\3 - STRU1902-S-603.dwg LAYOUT NAME: 1902-S-603 PLOTTED: Friday, April 10, 2015 - 12:50pm USER: douglas.szilagyi

SHEET FORMAT IS 22" X 34". IF PRINTED SHEET IS NOT 22" X 34", THEN IT IS NOT TO SCALE