PIER 1902 REPAIRS

AUTEC SITE 1
ANDROS ISLAND, BAHAMAS

NAVFAC
Naval Facilities Engineering Command
NAVFAC SE

AERIAL

FINAL

FEBRUARY 18, 2015

COMMANDER NAVFAC/BLTL– AL PAIVANDY, R.A.	IPT TECH. BRANCH HEAD – S. ZAVOYSKI, R.A.	NA DESIGN ARCHITECT – NA	NA DESIGN MECHANICAL – NA	DESIGN CIVIL – RICARDO PALMO	NA CHIEF ARCHITECT– RAYMOND RODRIGUEZ, R.A.
IPT PROJECT MANAGER – HOLLY KING, R.A.		DESIGN STRUCTURAL – DOUGLAS SZILAGYI, P.E.	DESIGN ELECTRICAL – CHRIS DUGUID, P.E.	NA DESIGN FIRE PROTECTION – NA	CHIEF STRUCTURAL – KURT W. WITTMAN, P.E.

NA CHIEF MECHANICAL – STAN YEKALIS, P.E.	CHIEF CIVIL – JEFFREY FRANK, P.E.	
CHIEF ELECTRICAL – RAMON FLORES, P.E.	NA CHIEF FIRE PROTECTION–TAYLOR HUDSON, P.E.	

DRAWFORM REVISION: 7 AUGUST 2009

SYM	DESCRIPTION	DATE	APPR

NAVFAC

SEAL

A/E INFO

APPROVED

FOR COMMANDER NAVFAC / B.L.T.L.

ACTIVITY

SATISFACTORY TO DATE

DES DAS | DRW DAS | CHK KW

PROJECT MANAGER H. KING

IPT TECH. BRANCH HEAD S. ZAVOYSKI

CHIEF ENG/ARCH (CORE) KW

DEPARTMENT OF THE NAVY
NAVAL FACILITIES ENGINEERING COMMAND
NAVAL FACILITIES ENGINEERING COMMAND SOUTHEAST
IPT SOUTH ATLANTIC
NAVAL AIR STATION JACKSONVILLE

AUTEC SITE 1
ANDROS ISLAND, BAHAMAS

PIER 1902 REPAIRS

COVER & SIGNATURE SHEET

SCALE: SCALE

EPROJECT NO.: 1302903

CONSTR. CONTR. NO. N69450–XX–C–XXXX

NAVFAC DRAWING NO. 15079026

SHEET 1 OF 56

G001

PWD SHEET NUMBER --

FILE NAME: P:\CIBL\project_files\FLORIDA\nas key west fl\hjn00213\autec pier repairs-1302903\working technical files\Dwgs\Sheet Files\0 – GENEG001 COVER & SIGNATURE SHEET.dwg LAYOUT NAME: G001 COVER & SIGNATURE SHEET PLOTTED: Wednesday, February 11, 2015 – 12:43pm USER: douglas.szilagyi

Sheet List Table

SHEET NUMBER	SHEET TITLE	NAVFAC DWG NO.	PWD SHEET NUMBER
0 – GENERAL			
G001	COVER & SIGNATURE SHEET	15079026	--
G002	DRAWING SHEET INDEX	15079027	--
G003	GENERAL SITE PLAN	15079028	--
G004	CONSTRUCTION PHASING PLAN	15079029	--
1 – CIVIL			
C001	GENERAL NOTES	15079030	--
C100	EXISTING CONDITIONS AND DEMOLITION SITE PLAN	15079031	--
C101	EXISTING CONDITIONS AND DEMOLITION SITE PLAN	15079032	--
C200	UTILITY SITE PLAN	15079033	--
C201	UTILITY SITE PLAN	15079034	--
C300	EROSION AND SEDIMENT CONTROL	15079035	--
C301	EROSION AND SEDIMENT CONTROL	15079036	--
C501	SITE CONSTRUCTION DETAILS	15079037	--
C502	UTILITY DETAILS	15079038	--
3 – STRUCTURAL			
S001	GENERAL NOTES AND ABBREVIATIONS	15079039	--
S002	EXISTING LOADING PLAN – GRID 1–17	15079040	--
S003	EXISTING LOADING PLAN – GRID 17–33	15079041	--
S004	NEW LOADING PLAN – GRID 1–17	15079042	--
S005	NEW LOADING PLAN – GRID 17–33	15079043	--
S101	SUBSTRUCTURE DEFECT PLAN – GRID 1–12	15079044	--
S102	SUBSTRUCTURE DEFECT PLAN – GRID 12–24	15079045	--
S103	SUBSTRUCTURE DEFECT PLAN – GRID 24–33	15079046	--
S104	SUPERSTRUCTURE DEFECT PLAN – GRID 1–12	15079047	--
S105	SUPERSTRUCTURE DEFECT PLAN – GRID 12–24	15079048	--
S106	SUPERSTRUCTURE DEFECT PLAN – GRID 24–33	15079049	--
S201	SUBSTRUCTURE REPAIR PLAN – GRID 1–12	15079050	--
S202	SUBSTRUCTURE REPAIR PLAN – GRID 12–24	15079051	--
S203	SUBSTRUCTURE REPAIR PLAN – GRID 24–33	15079052	--
S204	SUPERSTRUCTURE REPAIR PLAN – GRID 1–12	15079053	--
S205	SUPERSTRUCTURE REPAIR PLAN – GRID 12–24	15079054	--
S206	SUPERSTRUCTURE REPAIR PLAN – GRID 24–33	15079055	--
S301	REPAIR SCHEDULE	15079056	--
S302	REPAIR SCHEDULE	15079057	--
S303	REPAIR SCHEDULE	15079058	--
S304	REPAIR SCHEDULE	15079059	--
S305	REPAIR SCHEDULE	15079060	--
S306	REPAIR SCHEDULE	15079061	--
S307	REPAIR SCHEDULE	15079062	--
S308	REPAIR SCHEDULE	15079063	--
S401	EXISTING SECTIONS AND DETAILS	15079064	--
S402	EXISTING SECTIONS AND DETAILS	15079065	--
S403	EXISTING SECTIONS AND DETAILS	15079066	--
S501	REPAIR SECTIONS AND DETAILS	15079067	--
S502	REPAIR SECTIONS AND DETAILS	15079068	--
S503	REPAIR SECTIONS AND DETAILS	15079069	--
S504	REPAIR SECTIONS AND DETAILS	15079070	--
S505	REPAIR SECTION AND DETAILS	15079071	--
S506	REPAIR SECTIONS AND DETAILS	15079072	--
S601	REPAIR DETAILS	15079073	--
S602	REPAIR DETAILS	15079074	--
S603	REPAIR DETAILS	15079075	--
9 – ELECTRICAL			
E001	GENERAL NOTES SYMBOLS AND LEGENDS	15079076	--
ED101	DEMOLITION PLAN	15079077	--
ED102	DEMOLITION PLAN	15079078	--
ES101	SITE PLAN	15079079	--
ES102	SITE PLAN	15079080	--
E701	PANEL SCHEDULES	15079081	--

SYM	DESCRIPTION	DATE	APPR
---	---	---	---
---	---	---	---
---	---	---	---
---	---	---	---
---	---	---	---
---	---	---	---
---	---	---	---
---	---	---	---

SEAL

A/E INFO

APPROVED

FOR COMMANDER NAVFAC / B.L.T.L.

ACTIVITY

SATISFACTORY TO DATE

DES DAS DRW DAS CHK KW

PROJECT MANAGER H. KING

IPT TECH. BRANCH HEAD S. ZAVOYSKI

CHIEF ENG/ARCH (CORE) --

DEPARTMENT OF THE NAVY
NAVAL FACILITIES ENGINEERING COMMAND
NAVAL FACILITIES ENGINEERING COMMAND SOUTHEAST
NAVAL AIR STATION JACKSONVILLE
IPT SOUTH ATLANTIC
AUTEC SITE 1
ANDROS ISLAND, BAHAMAS

PIER 1902 REPAIRS

DRAWING SHEET INDEX

SCALE: SCALE

EPROJECT NO.: 1302903

CONSTR. CONTR. NO.: N69450–XX–C–XXXX

NAVFAC DRAWING NO.: 15079027

SHEET 2 OF 56

G002

PWD SHEET NUMBER: --

DRAWFORM REVISION: 7 AUGUST 2009

SHEET FORMAT IS 22" X 34". IF PRINTED SHEET IS NOT 22" X 34", THEN IT IS NOT TO SCALE

FILE NAME: P:\CBL\project_files\FLORIDA\nas key west 11\hjh00213\autec pier repairs-1302903\working technical files\Dwgs\Sheet Files\0 - GENE\G002 DRAWING SHEET INDEX.dwg LAYOUT NAME: G002 DRAWING SHEET INDEX PLOTTED: Wednesday, February 11, 2015 - 12:25pm USER: douglas.szlhagyi

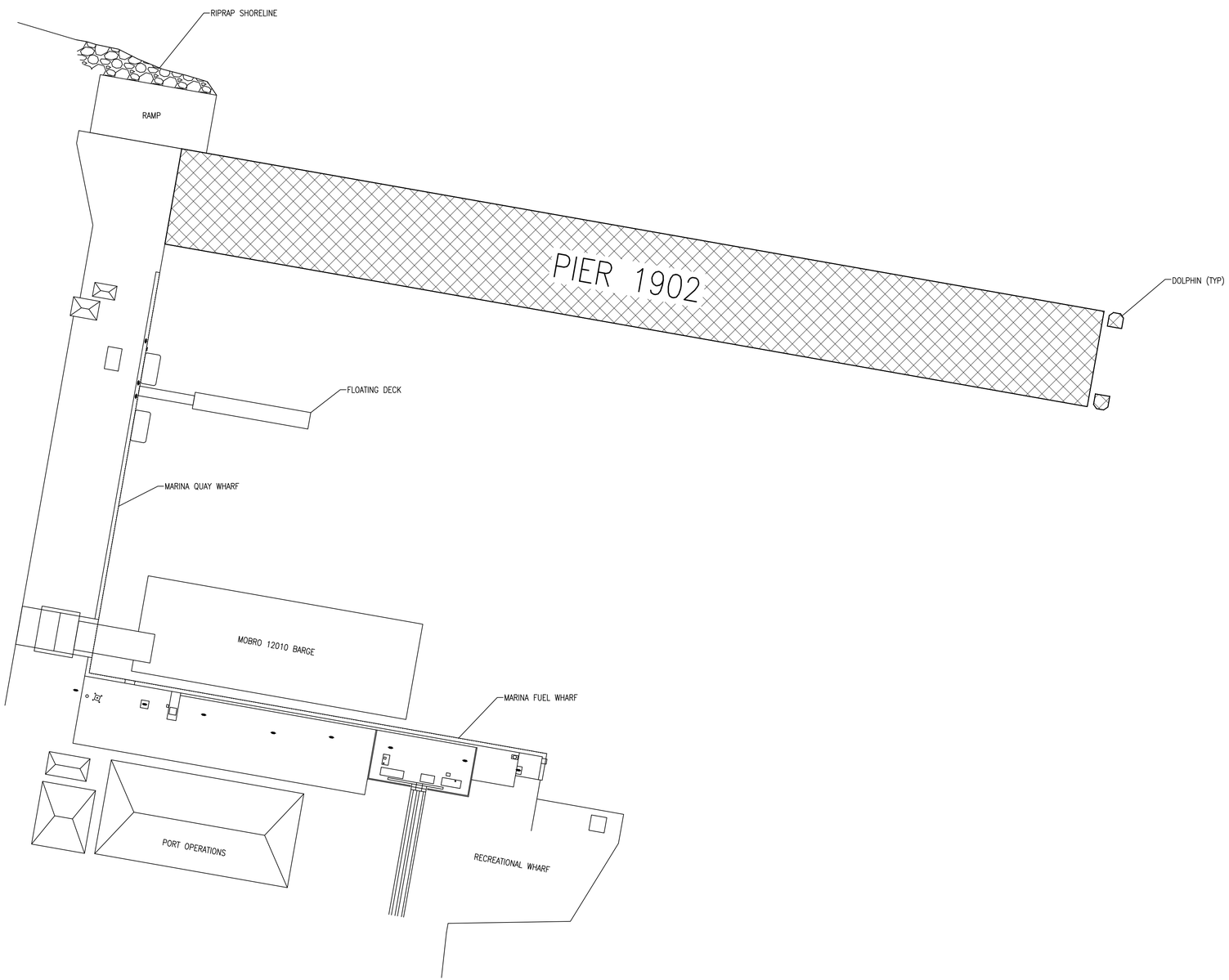

1 GENERAL SITE PLAN
Scale: 1/32" = 1'-0"

N TRUE NORTH

N PLAN NORTH

SITE NOTES

1. DENOTES APPROXIMATE EXTENTS OF REPAIR CONSTRUCTION.
2. PIER 1902 MUST REMAIN PARTIALLY OPERATIONAL DURING REPAIR CONSTRUCTION. IT IS THE ONLY FACILITY FOR MOORING SHIPS AT AUTEC SITE-1. A DETAILED CONSTRUCTION SCHEDULE MUST BE APPROVED BY AUTEC PRIOR TO ANY WORK PERFORMED.
3. CONSTRUCTION OPERATIONS MAY BE SUBJECT TO OCCASIONAL TEMPORARY WORK STOPPAGE DUE TO NON-DISCLOSED DELIVERY OF EXPLOSIVE MATERIALS TO THE SITE OR RANGE TESTING. CONTRACTOR MUST EVACUATE ALL PERSONNEL FROM PORT AREA DURING EXPLOSIVE DELIVERY OPERATIONS. EXPLOSIVE DELIVERIES ARE NOT FREQUENT BUT THE CONTRACTOR SHALL BE PREPARED FOR THE OCCASIONAL OCCURRENCE. IT IS ANTICIPATED THAT 2 WORK STOPPAGES WILL OCCUR PER MONTH WITH EACH WORK STOPPAGE LASTING APPROXIMATELY 6 HOURS.

VICINITY MAP

LOCATION MAP

SYM	DESCRIPTION	DATE	APPR
---	---	---	---

NAVFAC

SEAL

A/E INFO

APPROVED

FOR COMMANDER NAVFAC / B.L.T.L.

ACTIVITY

SATISFACTORY TO CNSF

DES	DAS	DRW	DAS	CHK	KW

PROJECT MANAGER H. KING

IPT TECH. BRANCH HEAD S. ZAVOYSKI

CHIEF ENG/ARCH (CORE) --

DEPARTMENT OF THE NAVY
NAVAL FACILITIES ENGINEERING COMMAND
NAVAL FACILITIES ENGINEERING COMMAND SOUTHEAST
IPT SOUTH ATLANTIC
NAVAL AIR STATION JACKSONVILLE

AUTEC SITE 1

ANDROS ISLAND, BAHAMAS

PIER 1902 REPAIRS

GENERAL SITE PLAN

SCALE: SCALE

EPROJECT NO.: 1302903

CONSTR. CONTR. NO. N69450-XX-C-XXXX

NAVFAC DRAWING NO. 15079028

SHEET 3 OF 56

G003

DRAWFORM REVISION: 7 AUGUST 2009

FILE NAME: P:\CIBL\project_files\FLORIDA\nas key west fl\jn00213\autec pier repairs~1302903\working technical files\Dwgs\Sheet Files\0 - GENE1902-G-003.dwg LAYOUT NAME: 1902-G-003 PLOTTED: Wednesday, February 11, 2015 - 12:25pm USER: douglas.szilagyi

SHEET FORMAT IS 22" X 34". IF PRINTED SHEET IS NOT 22" X 34", THEN IT IS NOT TO SCALE

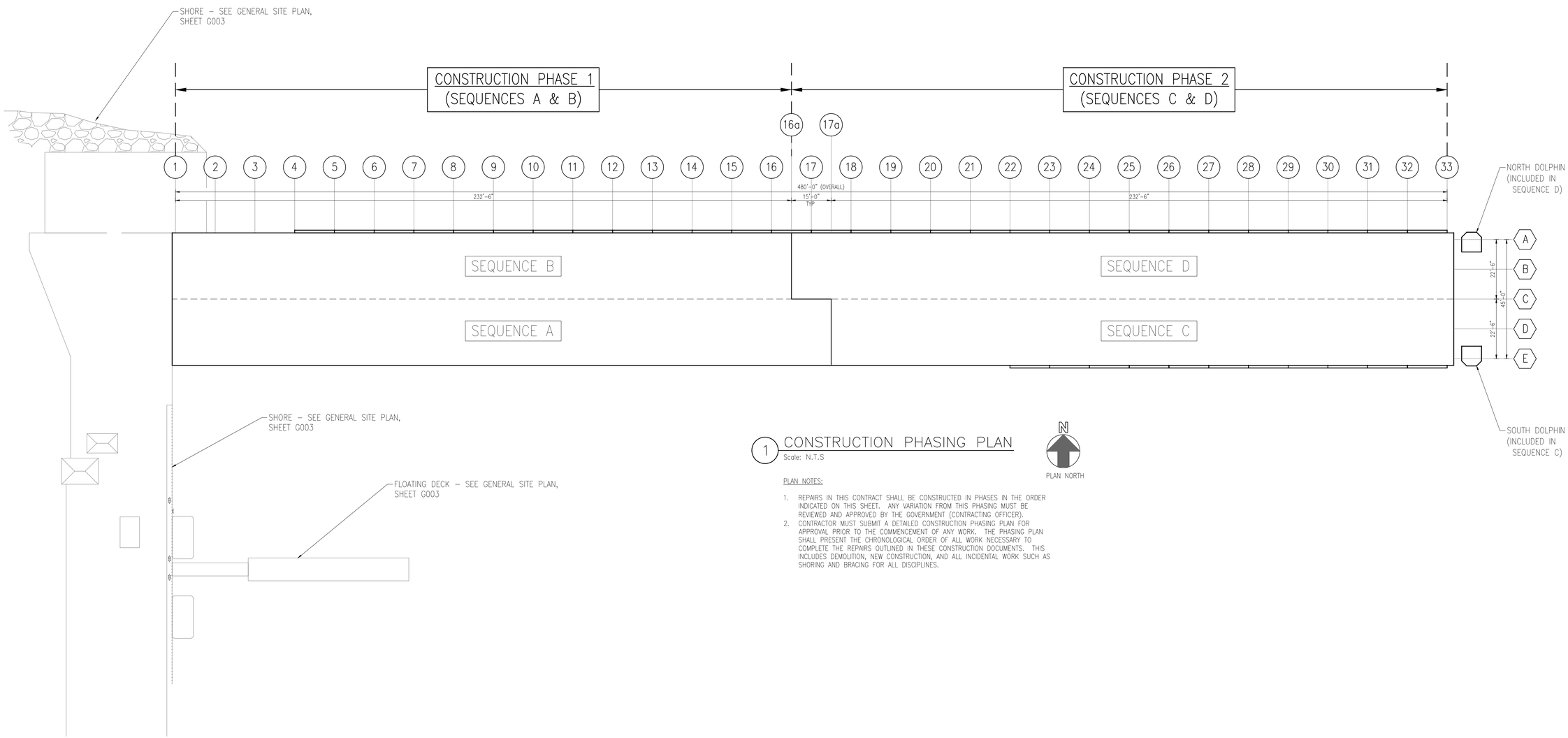

1 CONSTRUCTION PHASING PLAN

Scale: N.T.S

PLAN NOTES:

1. REPAIRS IN THIS CONTRACT SHALL BE CONSTRUCTED IN PHASES IN THE ORDER INDICATED ON THIS SHEET. ANY VARIATION FROM THIS PHASING MUST BE REVIEWED AND APPROVED BY THE GOVERNMENT (CONTRACTING OFFICER).
2. CONTRACTOR MUST SUBMIT A DETAILED CONSTRUCTION PHASING PLAN FOR APPROVAL PRIOR TO THE COMMENCEMENT OF ANY WORK. THE PHASING PLAN SHALL PRESENT THE CHRONOLOGICAL ORDER OF ALL WORK NECESSARY TO COMPLETE THE REPAIRS OUTLINED IN THESE CONSTRUCTION DOCUMENTS. THIS INCLUDES DEMOLITION, NEW CONSTRUCTION, AND ALL INCIDENTAL WORK SUCH AS SHORING AND BRACING FOR ALL DISCIPLINES.

SYM	DESCRIPTION	DATE	APPR

NAVFAC

SEAL

A/E INFO

APPROVED

FOR COMMANDER NAVFAC / B.L.T.L.

ACTIVITY

SATISFACTORY TO DATE

DES	DAS	DRW	DAS	CHK	KW

PROJECT MANAGER H. KING

IPT TECH. BRANCH HEAD S. ZAVOYSKI

CHIEF ENG/ARCH (CORE) --

DEPARTMENT OF THE NAVY
NAVAL FACILITIES ENGINEERING COMMAND
NAVAL FACILITIES ENGINEERING COMMAND SOUTHEAST
IPT SOUTH ATLANTIC
NAVAL AIR STATION JACKSONVILLE

AUTEC SITE 1
ANDROS ISLAND, BAHAMAS

PIER 1902 REPAIRS

CONSTRUCTION PHASING PLAN

SCALE: SCALE

EPROJECT NO.: 1302903

CONSTR. CONTR. NO. N69450-XX-C-XXXX

NAVFAC DRAWING NO. 15079029

SHEET 4 OF 56

G004

DRAWFORM REVISION: 7 AUGUST 2009

FILE NAME: P:\CBL\project_files\FLORIDA\nas key west fl\hjn00213\autec pier repairs-1302903\working technical files\Dwgs\Sheet Files\0 - GENE1902-G004.dwg LAYOUT NAME: 1902-G004 PLOTTED: Wednesday, February 18, 2015 - 11:48am USER: douglas.szilagyi

SHEET FORMAT IS 22" X 34". IF PRINTED SHEET IS NOT 22" X 34", THEN IT IS NOT TO SCALE

GENERAL NOTES:

1. THE LOCATIONS OF SOME UTILITIES SHOWN ON THE DRAWING ARE BASED ON INFORMATION OBTAINED FROM UTILITY PLANS PROVIDED BY AUTEC. THE ACCURACY AND COMPLETENESS OF THESE RECORDS IS NOT KNOWN.
2. IT IS THE RESPONSIBILITY OF THE CONTRACTOR TO CONFIRM IN THE FIELD, TO THE CONTRACTORS SATISFACTION, THE LOCATIONS AND ELEVATIONS FOR ALL UTILITIES THAT MAY EFFECT THE WORK.
3. THE CONTRACTOR SHALL COORDINATE ALL CONSTRUCTION AND STRUCTURE PLACEMENT WITH ALL UTILITY CONSTRUCTION.
4. THE CONTRACTOR SHALL PROVIDE AND MAINTAIN ADEQUATE EROSION AND SOIL CONTROL DURING AND FOLLOWING CONSTRUCTION UNTIL ALL DISTURBED AREAS HAVE BEEN STABILIZED TO AVOID ADVERSE ENVIRONMENTAL IMPACTS TO OFF-SITE PROPERTY AND ANY DRAINAGE SYSTEMS.
5. ALL SEDIMENT AND EROSION CONTROL MEASURES SHALL BE INSTALLED AND MAINTAINED IN ACCORDANCE WITH THE CONSTRUCTION POLLUTION PREVENTION PLAN.
6. ALL UNDERGROUND UTILITIES TO BE INSTALLED IN ACCORDANCE WITH THE PLANS AND APPROVED SPECIFICATIONS.
7. THE CONTRACTOR(S) SHALL NOTIFY ALL APPLICABLE PUBLIC WORKS AND THE CONTRACTING OFFICER 48 HOURS PRIOR TO INITIATING ANY EXCAVATION ACTIVITIES, OR AS SPECIFIED BY THE UTILITY COMPANIES AND THE PERMITS OBTAINED FOR THE WORK.
8. CONSTRUCTION WARNING SIGNS ARE TO BE MOUNTED AND ERECTED BEFORE CONSTRUCTION CAN COMMENCE. THESE AND ALL TRAFFIC CONTROL DEVICES SHALL FOLLOW THE STANDARDS SET FORTH BY THE MANUAL OF UNIFORM TRAFFIC CONTROL DEVICES (MUTCD).
9. THE CONTRACTOR IS RESPONSIBLE FOR CLEARLY IDENTIFYING THE AREA OF CONSTRUCTION AND SAFELY ROUTING ALL VEHICULAR AND PEDESTRIAN TRAFFIC AROUND THE CONSTRUCTION AREA.
10. THE CONTRACTOR(S) SHALL LOCATE, VERIFY AND IDENTIFY ALL EXISTING UNDERGROUND UTILITIES (SHOWN OR NOT SHOWN) ON THE PLANS PRIOR TO ANY EXCAVATION ACTIVITIES.
11. THE CONTRACTOR SHALL VERIFY ALL UTILITY LOCATIONS PRIOR TO EXCAVATION AND TAKE ALL MEASURES NECESSARY TO PROTECT UTILITIES DURING CONSTRUCTION. SHOULD ANY UTILITY LINE OR COMPONENT BECOME DAMAGED OR REQUIRE RELOCATION, THE CONTRACTOR SHALL IMMEDIATELY NOTIFY THE CONTRACTING OFFICER.
12. THE CONTRACTOR SHALL PROTECT EXISTING UTILITIES, SURVEY MARKERS, MONUMENTS, ETC. DURING CONSTRUCTION.
13. THERE SHALL BE ADEQUATE NOTICE GIVEN FOR SCHEDULING THE FINAL INSPECTION TO ALLOW FOR TRAVEL TO THE SITE.

DEMOLITION NOTES:

1. CODES: ALL CODES REGULATING DEMOLITION WORK LISTED IN THE SPECIFICATIONS SHALL BE COMPLIED WITH. THE CONTRACTOR SHALL PUT UP AND MAINTAIN SUCH BARRIERS AND WARNING LIGHTS AS MAY BE NECESSARY OR REQUIRED BY CODE TO PROTECT AND PREVENT UNAUTHORIZED PERSONNEL FROM ENTERING THE DEMOLITION WORK AREA. ALL DEMOLITION OPERATIONS SHALL COMPLY WITH THE REQUIREMENTS OF THE FEDERAL OCCUPATIONAL SAFETY AND HEALTH ACT (OSHA) INSOFAR AS THEY APPLY TO DEMOLITION WORK TO BE PERFORMED UNDER THIS CONTRACT.
2. PROTECTION OF BUILDINGS & EQUIPMENT: TEMPORARY PROTECTIVE DEVICES SHALL BE INSTALLED AS REQUIRED AROUND THE DEMOLITION WORK FOR PROTECTION OF PERSONNEL, EXISTING ADJACENT BUILDINGS, AND EQUIPMENT AGAINST DUST AND FALLING OR FLYING DEBRIS.
3. ALL UTILITY PIPE UNDER EXISTING ROADWAYS THAT IS TO BE REMOVED SHALL BE CAPPED AT THE EDGE OF PAVEMENT AND ABANDONED IN PLACE.

UTILITY NOTES:

1. UNLESS NOTED ON PLAN, ALL WATER LINE SHALL BE WELDED AND SEAMLESS SS-316 , SCH. 40 PIPE.
2. PVC PIPE SHALL BE C900 WITH METAL TRACING WIRE. PIPES SHALL BE MANUFACTURED IN CONFORMANCE WITH THE MOST RECENT AWWA STANDARDS, UFC 3-201-01 AND UFC3-600-01.
3. ALL FITTINGS OF THE WATER LINE SHALL BE 316 STAINLESS STEEL.
4. WATER LINES SHALL BE FLUSHED AND DISINFECTED. DISINFECTION OF THE WATER MAINS SHALL BE IN ACCORDANCE WITH AWWA C-601 STANDARDS.
5. ALL FIRE HYDRANT BARRELS SHALL BE COLORED CHROME YELLOW PER REGULATION UFC 3-600-01 SEC 3-7.3.1. BONNET AND CAP TO BE PAINTED IN ACCORDANCE WITH NFPA 291.
6. NO VALVES ARE TO BE CLOSED BY THE CONTRACTOR PRIOR TO NOTIFICATION OF DEPARTMENT OF NAVSEA FACILITY MANAGEMENT DEPARTMENT.
7. CONTRACTOR SHALL REQUEST INSPECTION BY DPW 3 DAYS PRIOR TO COMMENCING CONSTRUCTION OF ANY WATER MAINS.
8. BACKFLOW PREVENTORS SHALL BE ABOVE GROUND.
9. CONTRACTOR SHALL SUBMIT SHOP DRAWING TO AUTEC DPW FOR FINAL APPROVAL OF WATER METER AND VAULT.
10. ANY WATER PIPING DEEPER THAN 10' AND/OR GREATER THAN 12" DIAMETER SHALL BE DUCTILE IRON PIPE.
11. PROVIDE FIRE SERVICE TYPE COLD WATER METER. METER SHALL BE CAPABLE OF MEASURING BOTH DOMESTIC AND FIRE SERVICE WATER USAGE THROUGH A SINGLE WATER LINE. METER SHALL MEET OR EXCEED AWWA C703 STANDARDS, AND SHALL BE UNDERWRITERS LABORATORY (UL) LISTED AND FACTORY MUTUAL (FM) APPROVED FOR FIRE SERVICE USE. METER SHALL BE MADE OUT OF STAINLESS STEEL.

EROSION AND SEDIMENT CONTROL NOTES:

1. STORMWATER POLLUTION PREVENTION PLAN AND EROSION AND SEDIMENT CONTROL MEASURES SHALL BE DEVELOPED IN ACCORDANCE WITH APPLICABLE LOCAL AND FEDERAL REGULATIONS. THE EROSION CONTROL MEASURES PRESENTED ON THE PLANS ARE INTENDED TO SHOW IN GENERAL TERMS THE MINIMUM ACCEPTABLE LEVEL OF PROTECTION ADJACENT TO THE PROPOSED STRUCTURE.
2. EROSION CONTROL MEASURES AND DETAILS DIFFERING FROM THOSE SHOWN IN THESE PLANS IN CONJUNCTION WITH THE REQUIRED STORMWATER POLLUTION PREVENTION PLAN MAY BE USED, HOWEVER THEY SHALL DEMONSTRATE THEIR ADEQUACY AND THAT PERFORMANCE WILL SATISFY LOCAL, STATE, AND FEDERAL REQUIREMENTS.
3. FOLLOWING COMPLETION OF WORK, REMOVE ALL BARRIERS AND RESTORE SITE.
4. THE STORMWATER POLLUTION PREVENTION PLAN MUST BE APPROVED BY THE ENVIRONMENTAL DIVISION PRIOR TO START OF DEMOLITION OR CONSTRUCTION ACTIVITIES
5. TURBIDITY BARRIERS SHALL BE USED TO MAINTAIN ACCEPTABLE TURBIDITY LEVELS.
6. NUMBER AND SPACING OF ANCHORS SHALL BE SUFFICIENT TO PREVENT DISPLACEMENT BY CURRENT VELOCITIES, VEGETATION OR DEBRIS.
7. TURBIDITY BARRIERS FOR FLOWING STREAMS AND TIDAL CREEKS MAY BE EITHER FLOATING, OR STAKED TYPES OR ANY COMBINATIONS OF TYPES THAT WILL SUIT SITE CONDITIONS AND MEET EROSION CONTROL AND WATER QUALITY REQUIREMENTS. POSTS IN STAKED TURBIDITY BARRIERS SHALL BE INSTALLED IN VERTICAL POSITION UNLESS OTHERWISE ALLOWED BY THE CONTRACTING OFFICER.

SYM	DESCRIPTION	DATE	APPR
---	---	---	---
---	---	---	---
---	---	---	---
---	---	---	---
---	---	---	---
---	---	---	---
---	---	---	---
---	---	---	---

SEAL

A/E INFO

APPROVED

FOR COMMANDER NAVFAC / B.L.T.L.

ACTIVITY

SATISFACTORY TO DATE

DES RP DRW RP CHK JF

PROJECT MANAGER H. KING

IPT TECH. BRANCH HEAD S. ZAVOYSKI

CHIEF ENG/ARCH (CORE) J. FRANK

DEPARTMENT OF THE NAVY
NAVAL FACILITIES ENGINEERING COMMAND
IPT SOUTH ATLANTIC
AUTEC SITE 1

NAVAL FACILITIES ENGINEERING COMMAND SOUTHEAST
NAVAL AIR STATION JACKSONVILLE

ANDROS ISLAND, BAHAMAS

PIER 1902 REPAIRS

GENERAL NOTES

SCALE: NONE

EPROJECT NO.: 1302903

CONSTR. CONTR. NO. N69450-XX-C-XXXX

NAVFAC DRAWING NO. 15079030

SHEET 5 OF 56

C001

IF SHEET IS LESS THAN (22" x 34") IT IS A REDUCED PRINT, SCALE REDUCED ACCORDINGLY

DRAWFORM REVISION: 7 AUGUST 2009

FILE NAME: C:\Users\DOUGLA~1.SZ\AppData\Local\Temp\1\AcPublish_6584\C001 GENERAL NOTES.dwg LAYOUT NAME: C001 GENERAL NOTES PLOTTED: Monday, February 09, 2015 - 2:38pm USER: douglas.szilagyi

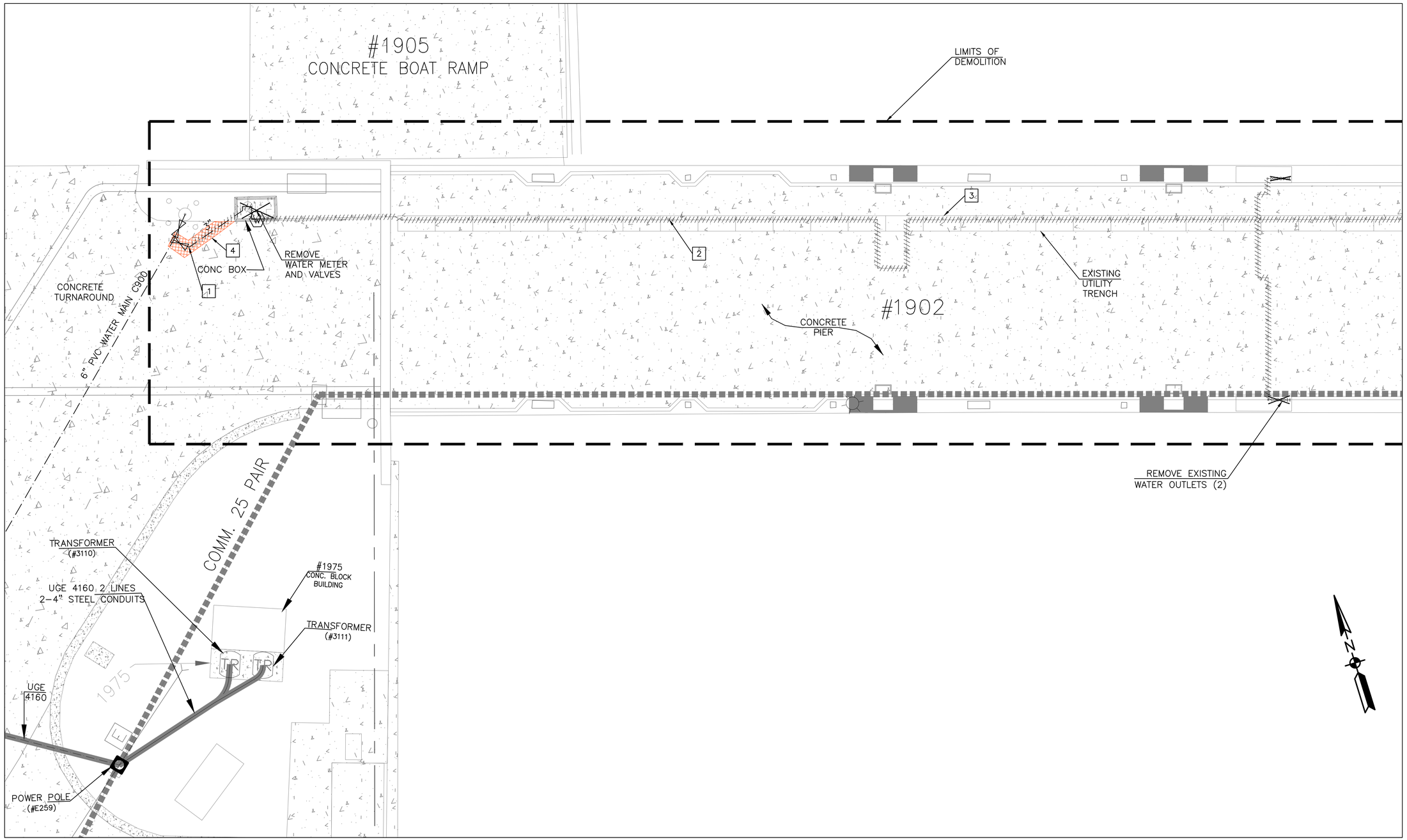

1 DEMOLITION PLAN
Scale: 1" = 10'-0"

NOTES:

1. ALL LIMITS OF DEMOLITION ARE APPROXIMATE.
2. CONTRACTOR TO COORDINATE WITH BASE UTILITIES TO ESTABLISH SCHEDULE OF UTILITY DISCONNECTIONS.

DEMOLISH EXISTING CONCRETE PAVEMENT

DEMOLISH EXISTING UTILITIES

DEMOLITION NOTES:

1. REMOVE EXISTING WATER LINE TO THE LIMITS SHOWN AND PERMANENTLY CAP THE PIPE.
2. REMOVE ALL EXISTING GUIDE AND STRAPS ON THE WATER LINE.
3. EXISTING UTILITY TRENCH TO REMAIN.
4. REMOVE REINFORCED CONCRETE PAVEMENT (6-9 INCHES THICK) WITHIN THE LIMITS SHOWN.

GRAPHIC SCALE
1"=10' 0' 10' 20' 30' 40' 50'

IF SHEET IS LESS THAN (22" x 34") IT IS A REDUCED PRINT, SCALE REDUCED ACCORDINGLY

SYM	DESCRIPTION	DATE	APPR
---	---	---	---

SEAL

A/E INFO.
APPROVED
FOR COMMANDER NAVFAC / B.L.T.L.
ACTIVITY
SATISFACTORY TO DATE

DES. RP DRW RP CHK JF
PROJECT MANAGER H. KING
IPT TECH. BRANCH HEAD S. ZAYOYSKI
CHIEF ENG/ARCH (CORE) J. FRANK

DEPARTMENT OF THE NAVY
NAVAL FACILITIES ENGINEERING COMMAND
NAVAL FACILITIES ENGINEERING COMMAND SOUTHEAST
NAVAL AIR STATION JACKSONVILLE
IPT SOUTH ATLANTIC
AUTEC SITE 1
ANDROS ISLAND, BAHAMAS
PIER 1902 REPAIRS
EXISTING CONDITIONS AND DEMOLITION SITE PLAN

SCALE: AS SHOWN
EPROJECT NO.: 1302903
CONSTR. CONTR. NO. N69450-XX-C-XXXX
NAVFAC DRAWING NO. 15079031
SHEET 6 OF 56
C100

DRAWFORM REVISION: 7 AUGUST 2009

FILE NAME: C:\Users\DOUGJA+1527\AppData\Local\Temp\1\AcPublish_6684\C100 EXISTING CONDITIONS AND DEMOLITION SITE PLAN.dwg LAYOUT NAME: C100 EXISTING CONDITIONS AND DEMOLITION SITE PLAN PLOTTED: Monday, February 09, 2015 - 4:04pm USER: douglas.szilagyi

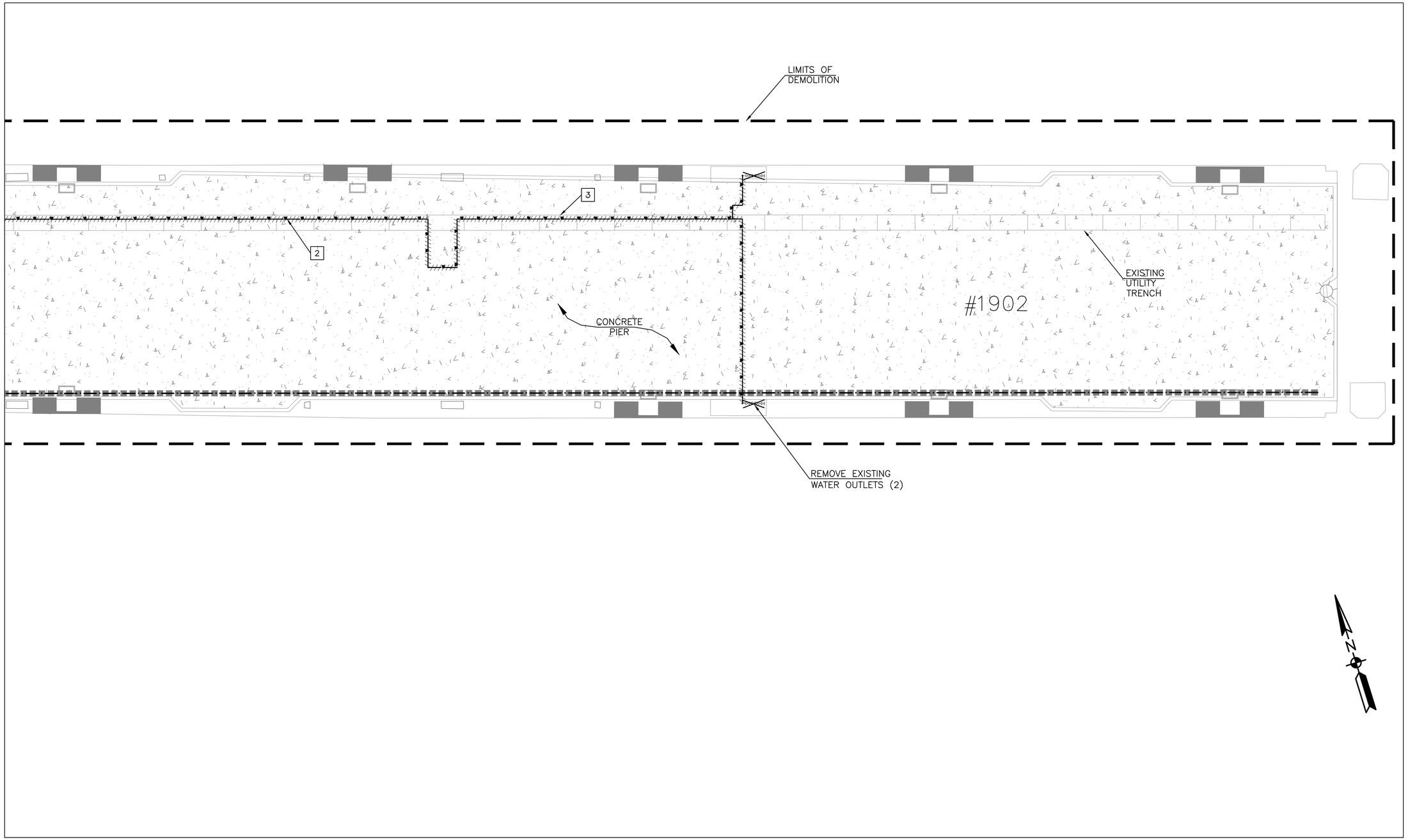

2 DEMOLITION PLAN
Scale: 1" = 10'-0"

NOTES:

1. ALL LIMITS OF DEMOLITION ARE APPROXIMATE.
2. CONTRACTOR TO COORDINATE WITH BASE UTILITIES TO ESTABLISH SCHEDULE OF UTILITY DISCONNECTIONS.

DEMOLISH EXISTING UTILITIES

DEMOLITION NOTES:

2 REMOVE ALL EXISTING GUIDE AND STRAPS ON THE WATER LINE.

3 EXISTING UTILITY TRENCH TO REMAIN.

GRAPHIC SCALE
1"=10' 0' 10' 20' 30' 40' 50'

IF SHEET IS LESS THAN (22" x 34") IT IS A REDUCED PRINT, SCALE REDUCED ACCORDINGLY

SYM	DESCRIPTION	DATE	APPR

NAVFAC

SEAL

A/E INFO

APPROVED

FOR COMMANDER NAVFAC

ACTIVITY

SATISFACTORY TO DATE

DES	RP	DRW	RP	CHK	JF

PROJECT MANAGER H. KING
IPT TECH. BRANCH HEAD S. ZAVOYSKI
CHIEF ENG/ARCH (CORE) J. FRANK

DEPARTMENT OF THE NAVY
NAVAL FACILITIES ENGINEERING COMMAND
NAVAL FACILITIES ENGINEERING COMMAND SOUTHEAST
IPT SOUTH ATLANTIC NAVAL AIR STATION JACKSONVILLE
AUTEC SITE 1 ANDROS ISLAND, BAHAMAS

PIER 1902 REPAIRS

EXISTING CONDITIONS AND DEMOLITION SITE PLAN

SCALE: AS SHOWN
EPROJECT NO.: 1302903
CONSTR. CONTR. NO. N69450-XX-C-XXXX
NAVFAC DRAWING NO. 15079032
SHEET 7 OF 56

C101

DRAWFORM REVISION: 5 APRIL 2012

FILE NAME: P:\CBL\project_files\FLORIDA\nas key west fl\jh00213\autec pier repairs-1302903\working technical files\Dwgs\Sheet Files\1 - CIVIC101 EXISTING CONDITIONS AND DEMOLITION SITE PLAN.dwg LAYOUT NAME: C101 EXISTING CONDITIONS AND DEMOLITION SITE PLAN PLOTTED: Monday, February 09, 2015 - 2:34pm USER: douglas.szilagyi

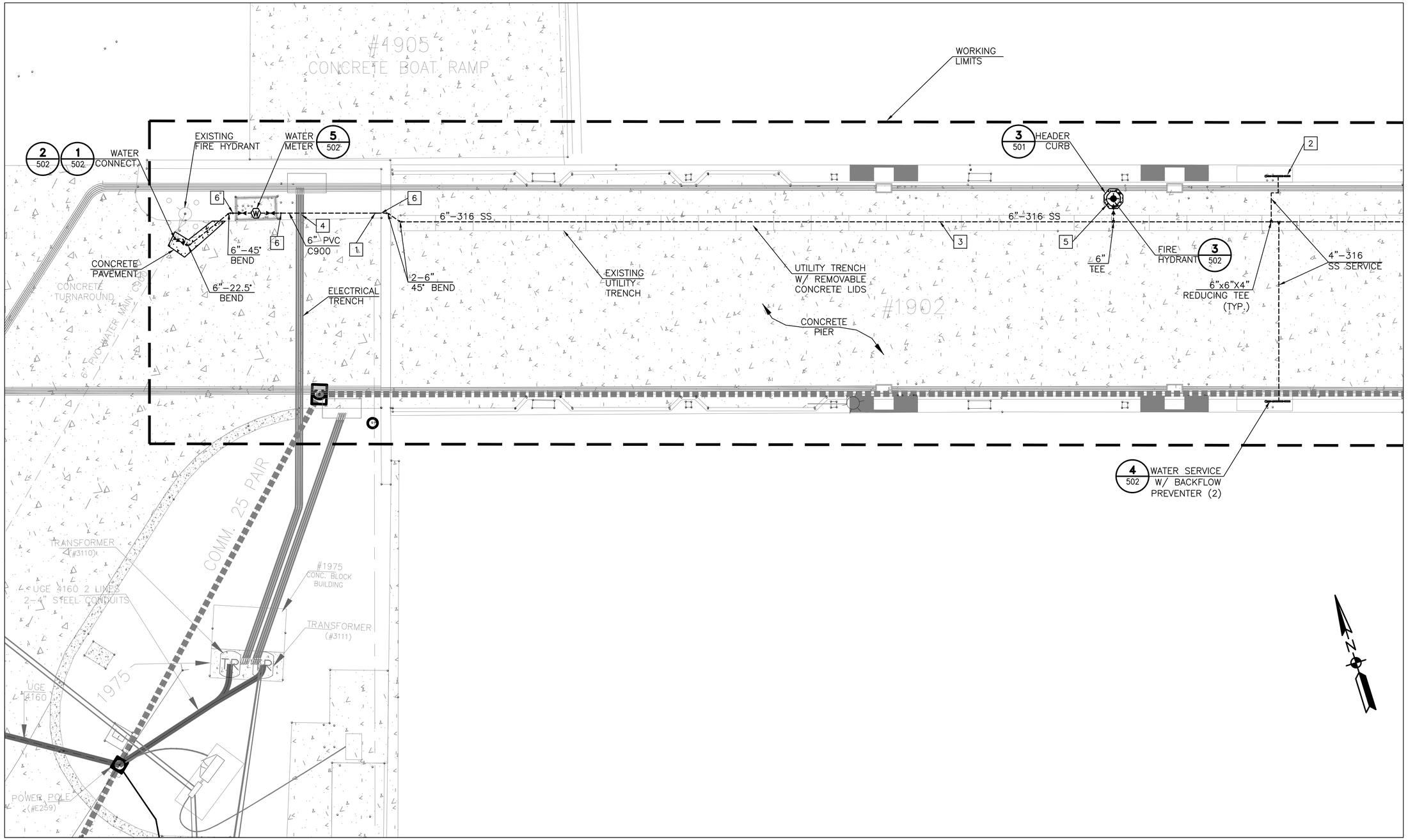

1 UTILITY PLAN
Scale: 1" = 10'-0"

NOTES:

1. ALL LIMITS OF WORK ARE APPROXIMATE.
2. REFER TO STRUCTURAL DRAWINGS FOR CONCRETE DECK REPAIR.

NEW CONCRETE PAVEMENT

HEADER CURB

UTILITY NOTES:

1. PROVIDE 6" C900 ADAPTER FOR PVC TO STAINLESS STEEL PIPE TRANSITION.
2. UNLESS NOTED ON PLAN, ALL WATER DISTRIBUTION PIPES ABOVE DECK SHALL BE STAINLESS STEEL.
3. ALL PIPE FITTINGS, HANGERS AND SUPPORT ON THE PIER SIDE SHALL BE STAINLESS STEEL TYPE 316.
4. CONTRACTOR SHALL VERIFY ELECTRICAL TRENCH DEPTH ELEVATION BEFORE WATER LINE INSTALLATION.
5. FOR DRAINAGE PROVIDE A MINIMUM OF TWO 2" GAP OPENINGS TO THE HEADER CURB.
6. ABOVE GROUND PIPE TRANSITION. FOR INFORMATION SEE DETAIL 5 ON SHEET C502.

GRAPHIC SCALE
1"=10' 0' 10' 20' 30' 40' 50'

IF SHEET IS LESS THAN (22" x 34") IT IS A REDUCED PRINT, SCALE REDUCED ACCORDINGLY

SYM	DESCRIPTION	DATE	APPR

SEAL

A/E INFO

APPROVED
FOR COMMANDER NAVFAC / B.L.T.L.
ACTIVITY
SATISFACTORY TO DATE
DES RP DRW RP CHK JF
PROJECT MANAGER H. KING
IPT TECH. BRANCH HEAD S. ZAVOYSKI
CHIEF ENG/ARCH (CORE) J. FRANK

DEPARTMENT OF THE NAVY
NAVAL FACILITIES ENGINEERING COMMAND
IPT SOUTH ATLANTIC
NAVFAC NAVAL FACILITIES ENGINEERING COMMAND SOUTHEAST
NAVAL AIR STATION JACKSONVILLE
AUTEC SITE 1
ANDROS ISLAND, BAHAMAS
PIER 1902 REPAIRS
UTILITY SITE PLAN

SCALE: AS SHOWN
EPROJECT NO.: 1302903
CONSTR. CONTR. NO. N69450-XX-C-XXXX
NAVFAC DRAWING NO. 15079033
SHEET 8 OF 56
C200

DRAWFORM REVISION: 7 AUGUST 2009

FILE NAME: C:\Users\DOUGLA~1.SZ\AppData\Local\Temp\1\AcPublish_6584\C200 UTILITY SITE PLAN.dwg LAYOUT NAME: C200 UTILITY SITE PLAN PLOTTED: Monday, February 09, 2015 - 2:42pm USER: douglas.szilagyi

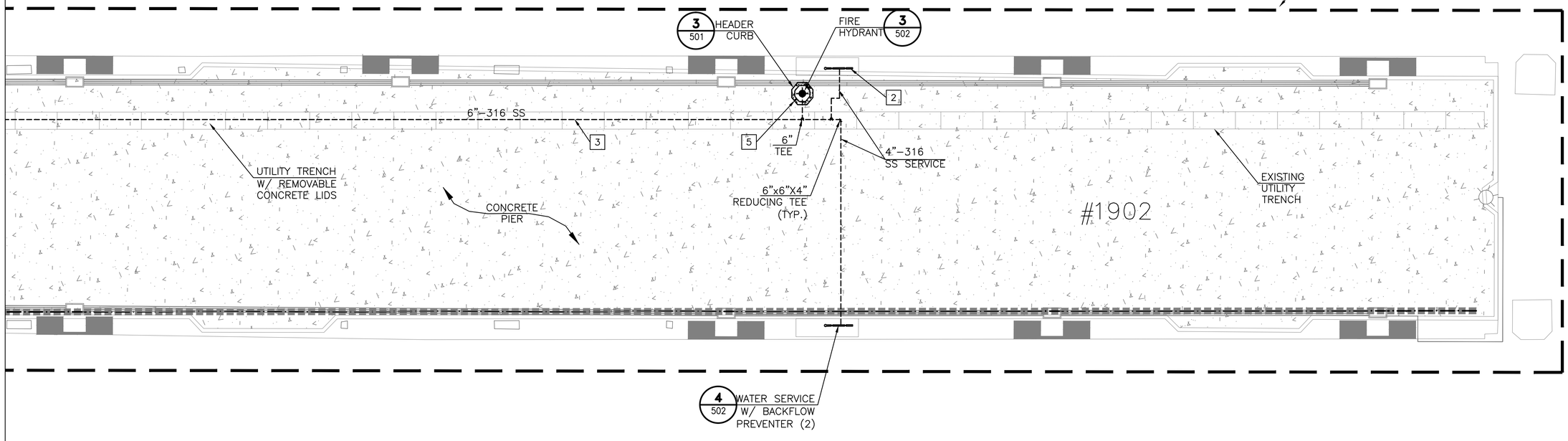

2 UTILITY PLAN

Scale: 1" = 10'-0"

NOTES:

1. ALL LIMITS OF WORK ARE APPROXIMATE.
2. REFER TO STRUCTURAL DRAWINGS FOR CONCRETE DECK REPAIR.

HEADER CURB

UTILITY NOTES:

2 ALL WATER DISTRIBUTION PIPES ABOVE DECK SHALL BE STAINLESS STEEL.

3 ALL PIPE FITTINGS, HANGERS AND SUPPORT ON THE PIER SIDE SHALL BE STAINLESS STEEL TYPE 316.

5 FOR DRAINAGE PROVIDE A MINIMUM OF TWO 2" GAP OPENING TO THE HEADER CURB.

GRAPHIC SCALE

1"=10' 0' 10' 20' 30' 40' 50'

IF SHEET IS LESS THAN (22" x 34") IT IS A REDUCED PRINT, SCALE REDUCED ACCORDINGLY

SYM	DESCRIPTION	DATE	APPR
---	---	---	---

SEAL

A/E INFO

APPROVED

FOR COMMANDER NAVFAC / B.L.T.L.

ACTIVITY

SATISFACTORY TO DATE

DES RP DRW RP CHK JF

PROJECT MANAGER H. KING

IPT TECH. BRANCH HEAD S. ZAVOYSKI

CHIEF ENG/ARCH (CORE) J. FRANK

DEPARTMENT OF THE NAVY
NAVAL FACILITIES ENGINEERING COMMAND
NAVAL FACILITIES ENGINEERING COMMAND SOUTHEAST
NAVAL AIR STATION JACKSONVILLE
IPT SOUTH ATLANTIC
AUTEC SITE 1
ANDROS ISLAND, BAHAMAS

PIER 1902 REPAIRS

UTILITY SITE PLAN

SCALE: AS SHOWN

EPROJECT NO.: 1302903

CONSTR. CONTR. NO.: N69450-XX-C-XXXX

NAVFAC DRAWING NO.: 150790354

SHEET 9 OF 56

C201

DRAWFORM REVISION: 7 AUGUST 2009

FILE NAME: C:\Users\DOUGLA~1.SZ\AppData\Local\Temp\1\AcPublish_6684\C201 UTILITY SITE PLAN.dwg LAYOUT NAME: C201 UTILITY SITE PLAN PLOTTED: Monday, February 09, 2015 - 3:25pm USER: douglas.szilagyi

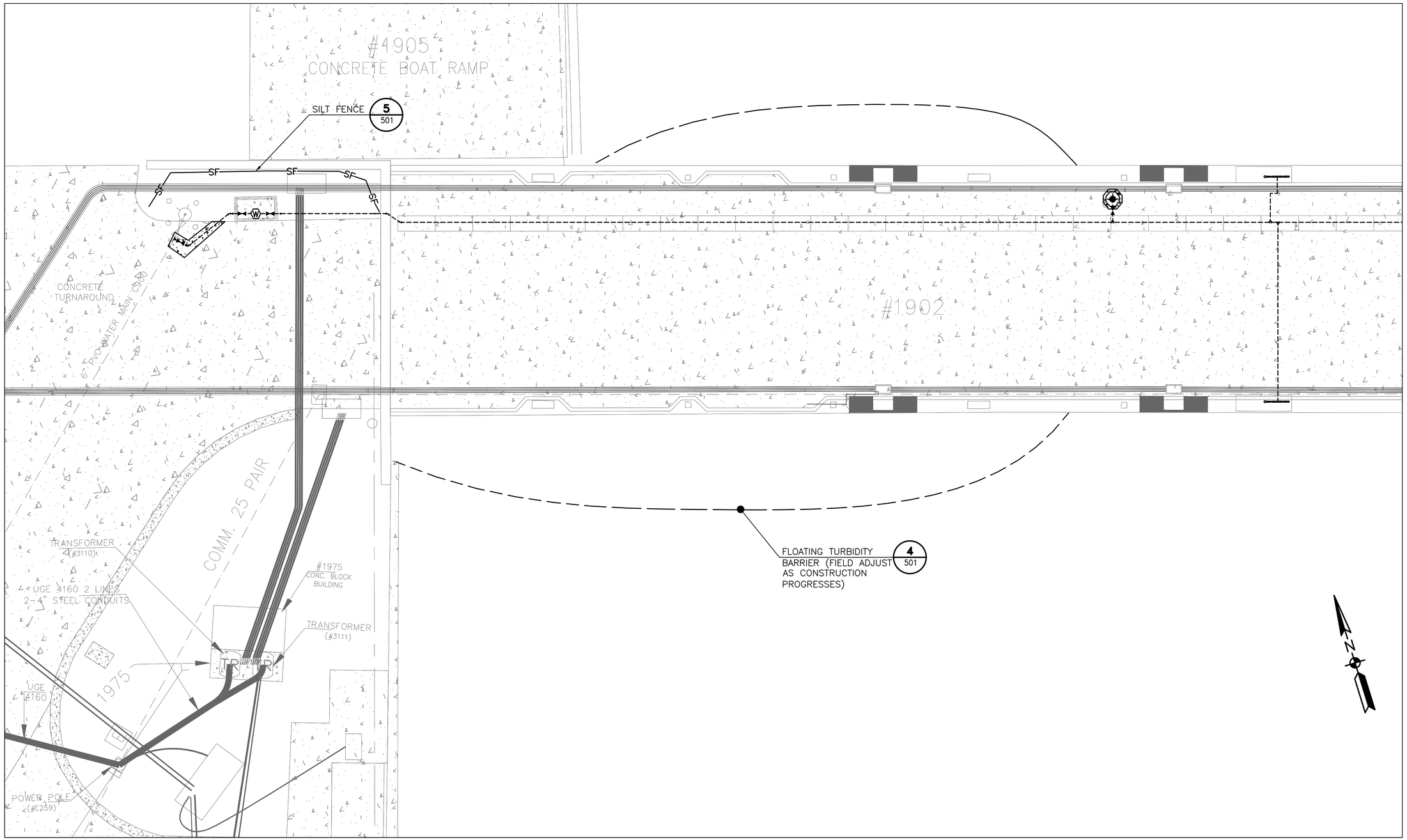

1 EROSION AND SEDIMENT CONTROL PLAN
Scale: 1" = 10'-0"

NOTE:

1. FOR EROSION AND SEDIMENT CONTROL NOTES, REFER TO SHEET C001 (GENERAL NOTES).

GRAPHIC SCALE
1"=10' 0' 10' 20' 30' 40' 50'

SYM	DESCRIPTION	DATE	APPR
---	---	---	---

NAVFAC

SEAL

A/E INFO

APPROVED
FOR COMMANDER NAVFAC / B.L.T.L.
ACTIVITY
SATISFACTORY TO DATE ----

DES RP DRW RP CHK JF
PROJECT MANAGER H. KING
IPT TECH. BRANCH HEAD S. ZAVOYSKI
CHIEF ENG/ARCH (CORE) J. FRANK

DEPARTMENT OF THE NAVY
NAVAL FACILITIES ENGINEERING COMMAND
IPT SOUTH ATLANTIC
NAVAL FACILITIES ENGINEERING COMMAND SOUTHEAST
NAVAL AIR STATION JACKSONVILLE
AUTEC SITE 1
ANDROS ISLAND, BAHAMAS
PIER 1902 REPAIRS
EROSION AND SEDIMENT CONTROL

SCALE: AS SHOWN
EPROJECT NO.: 1302903
CONSTR. CONTR. NO. N69450-XX-C-XXXX
NAVFAC DRAWING NO. 15079035
SHEET 10 OF 56
C300

DRAWFORM REVISION: 7 AUGUST 2009

SHEET FORMAT IS 22" X 34". IF PRINTED SHEET IS NOT 22" X 34", THEN IT IS NOT TO SCALE

FILE NAME: P:\OBL\project_files\FLORIDA\nas key west fl\hj00213\autec per repairs-1302903\working technical files\Dwgs\Sheet Files\1 - CIVC300 EROSION AND SEDIMENT CONTROL.dwg LAYOUT NAME: C300 EROSION AND SEDIMENT CONTROL PLOTTED: Monday, February 09, 2015 - 2:34pm USER: douglas.szlagyi

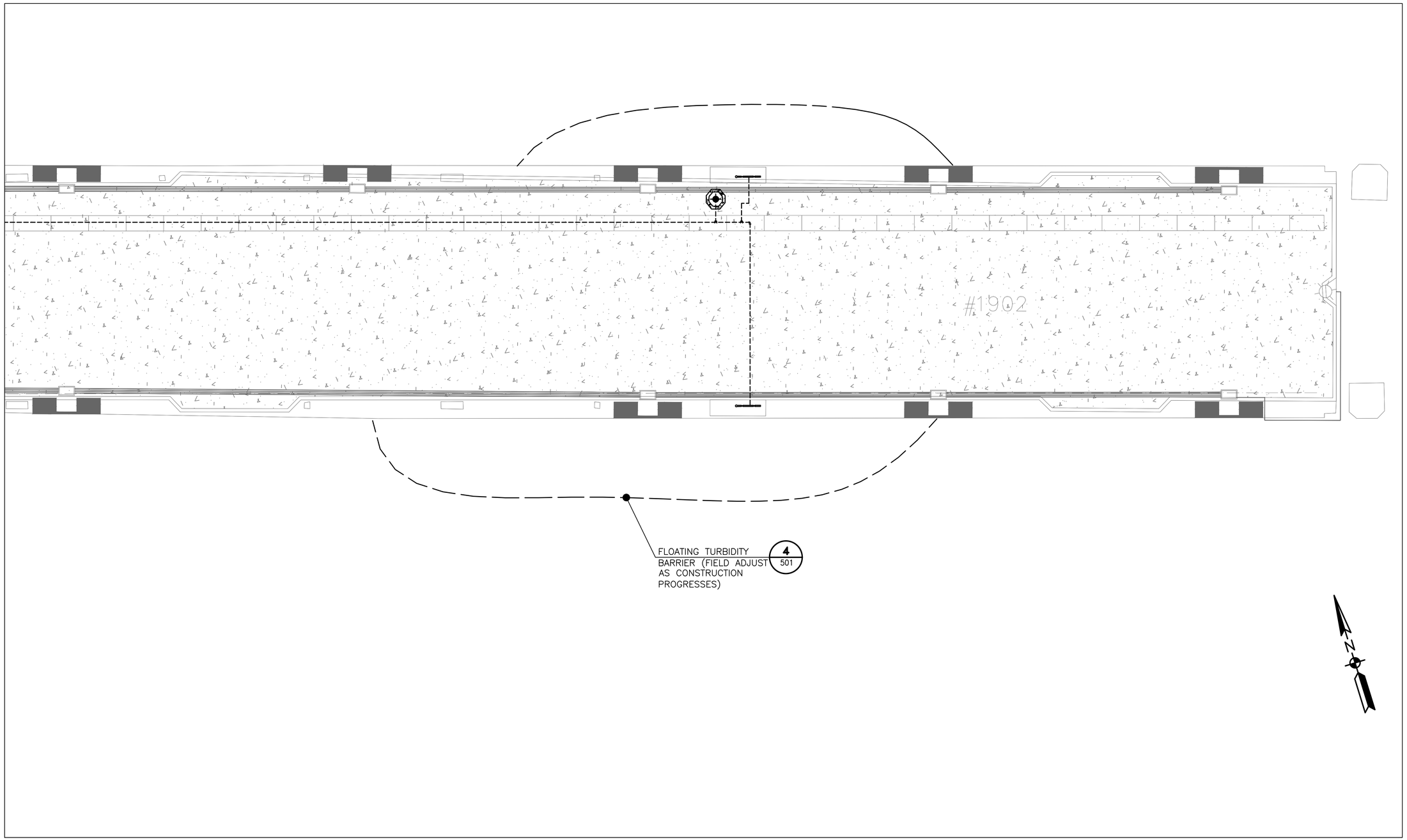

2 EROSION AND SEDIMENT CONTROL PLAN
Scale: 1" = 10'-0"

NOTE:

1. FOR EROSION AND SEDIMENT CONTROL NOTES, REFER TO SHEET C001 (GENERAL NOTES).

GRAPHIC SCALE
1"=10' 0' 10' 20' 30' 40' 50'

SYM	DESCRIPTION	DATE	APPR

NAVFAC

SEAL

A/E INFO

APPROVED

FOR COMMANDER NAVFAC / B.L.T.L.

ACTIVITY

SATISFACTORY TO DATE ----

DES RP DRW RP CHK JF

PROJECT MANAGER H. KING

IPT TECH. BRANCH HEAD S. ZAVOYSKI

CHIEF ENG/ARCH (CORE) J. FRANK

DEPARTMENT OF THE NAVY
NAVAL FACILITIES ENGINEERING COMMAND
NAVAL FACILITIES ENGINEERING COMMAND SOUTHEAST
IPT SOUTH ATLANTIC NAVAL AIR STATION JACKSONVILLE
AUTEC SITE 1 ANDROS ISLAND, BAHAMAS

PIER 1902 REPAIRS

EROSION AND SEDIMENT CONTROL

SCALE: AS SHOWN
EPROJECT NO.: 1302903
CONSTR. CONTR. NO. N69450-XX-C-XXXX
NAVFAC DRAWING NO. 15079036
SHEET 11 OF 56

C301

DRAWFORM REVISION: 7 AUGUST 2009

SHEET FORMAT IS 22" X 34". IF PRINTED SHEET IS NOT 22" X 34", THEN IT IS NOT TO SCALE

FILE NAME: P:\CIBL\project_files\FLORIDA\nas key west fl\fp\n00213\autec pier repairs-1302903\working technical files\Dwgs\Sheet Files\1 - CIVIC301 EROSION AND SEDIMENT CONTROL.dwg LAYOUT NAME: C301 EROSION AND SEDIMENT CONTROL PLOTTED: Monday, February 09, 2015 - 2:35pm USER: douglas.szilagyi

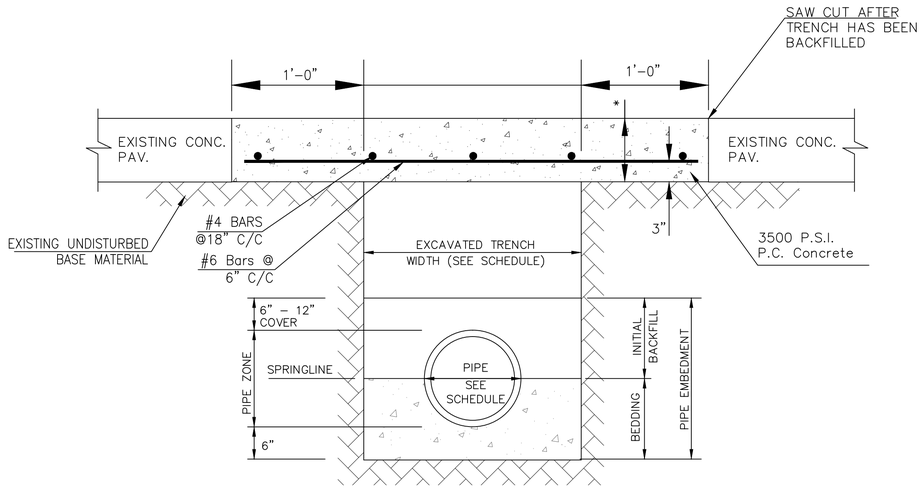

1 C501 TRENCH FOR PLASTIC PIPE
NOT TO SCALE

* MATCH EXISTING CONCRETE PAVEMENT DEPTH

TRENCH WIDTH SCHEDULE					
PIPE SIZE I.D.	12" & LESS	15" TO 21"	24" TO 30"	33" TO 54"	60" & OVER
TRENCH WIDTH (W/O SHORING)	24"	O.D. + 12"	O.D. + 18"	O.D. + 15"	O.D. + 15"
TRENCH WIDTH (W SHORING)	36"	O.D. + 24"	O.D. + 30"	O.D. + 30"	O.D. + 36"

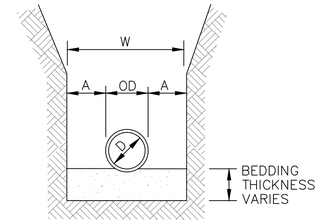

MAXIMUM TRENCH WIDTH "W" TAKEN AT TOP OF PIPE

NOTE: PROVIDE BEDDING IN ACCORDANCE WITH THE SPECIFICATIONS.

2 C501 TRENCH FOR NON-PLASTIC PIPE
NOT TO SCALE

PIPE DIA "D"	MAXIMUM "A"
6" TO 15"	8"
18" TO 21"	10"
24" TO 30"	12"
33" TO 42"	15"
48" & LARGER	18"

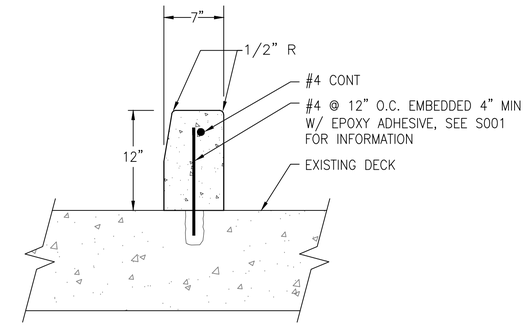

3 C501 HEADER CURB
NOT TO SCALE

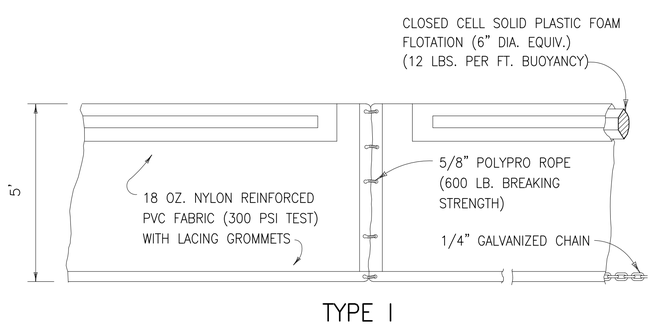

TYPE I

4 C501 FLOATING TURBIDITY BARRIERS
NOT TO SCALE

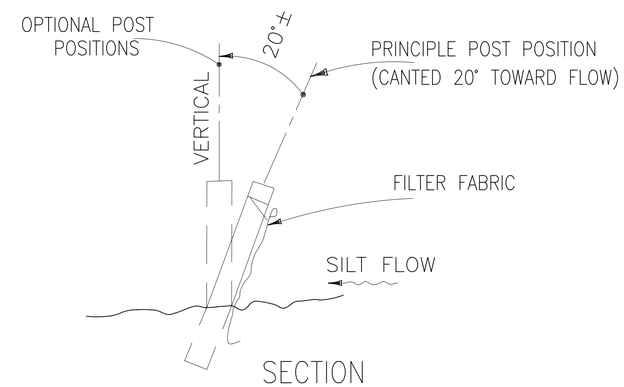

SECTION

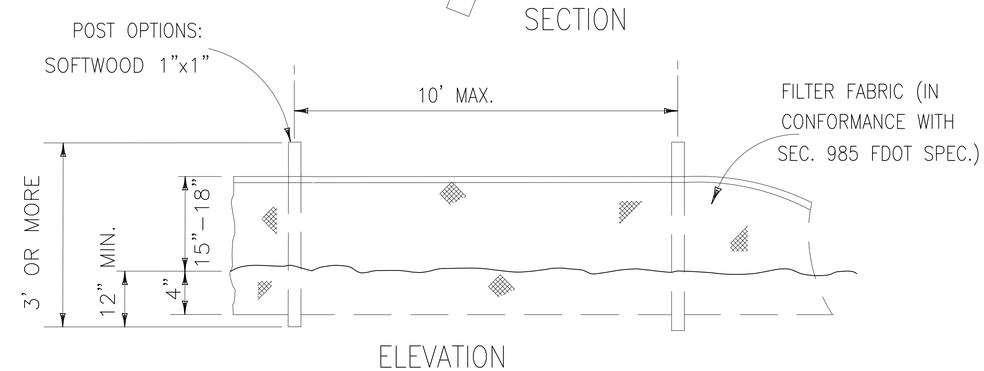

ELEVATION

5 C501 TYPE III SILT FENCE
NOT TO SCALE

NAVFAC

DEPARTMENT OF THE NAVY
NAVAL FACILITIES ENGINEERING COMMAND
IPT SOUTH ATLANTIC
NAVAL FACILITIES ENGINEERING COMMAND SOUTHEAST
NAVAL AIR STATION JACKSONVILLE
AUTEC SITE 1
ANDROS ISLAND, BAHAMAS

PIER 1902 REPAIRS

SITE CONSTRUCTION DETAILS

SCALE: NONE
EPROJECT NO.: 1302903
CONSTR. CONTR. NO. N69450-XX-C-XXXX
NAVFAC DRAWING NO. 15079037
SHEET 12 OF 56
C501

DRAWFORM REVISION: 5 APRIL 2012

APPROVED
FOR COMMANDER NAVFAC
ACTIVITY
SATISFACTORY TO DATE
DES RP DRW RP CHK JF
PROJECT MANAGER H. KING
IPT TECH. BRANCH HEAD S. ZAVOYSKI
CHIEF ENG/ARCH (CORE) J. FRANK

SYM DESCRIPTION DATE APPR

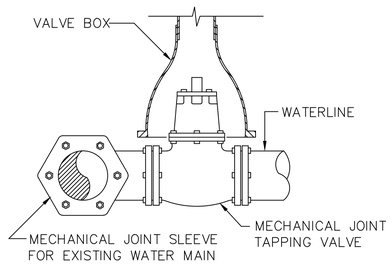

1 C502 TAPPING SLEEVE DETAIL
NOT TO SCALE

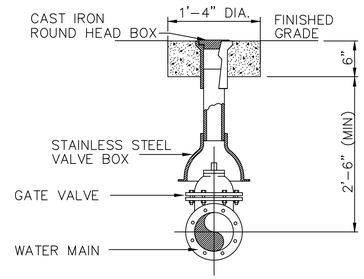

2 C502 VALVE DETAIL
NOT TO SCALE

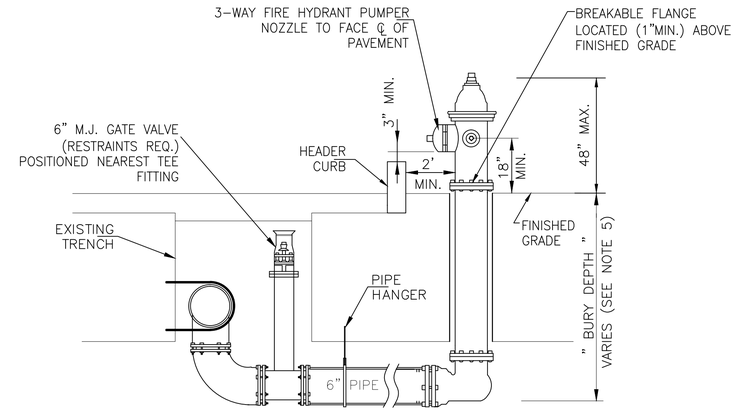

NOTE

1. ALL BOLTS SHALL BE STAINLESS STEEL TYPE 316 COATED WITH ANTI-SIEZE COMPOUND UNLESS OTHERWISE SPECIFIED. ALL BOLTS SHALL BE TIGHTENED USING A TORQUE WRENCH TO MANUFACTURER'S SPECIFICATIONS.
2. IF THRUST BLOCK ARE CALLED FOR, THEY SHALL BE PLACED AGAINST UNDISTURBED OR COMPACTED SOIL. ALL BOLTS AND JOINTS SHALL BE LEFT EXPOSED AND FREE FROM POURED CONCRETE
3. HORIZONTAL PIPE MATERIAL UNDER THE PIER SHALL BE STAINLESS STEEL TYPE 304.
4. ALL FITTINGS SHALL MEET AWWA STANDARD C153/A21 53-00. ALL GASKETS SHALL BE CHLORAMINE RESISTANT AS WELL AS MEET AWWA STANDARD C111/A21 11-00 AND NSF STANDARD 61.
5. ALL JOINTS SHALL BE PUSH ON WITH FIELD-LOC GASKETS OR MEGALUG OR FLANGED.
6. NYLON HYDRANT CAPS SHALL BE COLOR-CODED TO INDICATE AVAILABLE FLOW AND ATTACHED AS SHOWN WITH STAINLESS STEEL CHAIN OR WIRE.
7. HYDRANT BOLTS & NUTS SHALL BE $\frac{5}{8}$"X2$\frac{3}{4}$" STAINLESS STEEL TYPE 304 FOR BOTH ABOVE GROUND AND BURIED LOCATIONS. THREADS SHALL BE COATED WITH ANTI-SEIZE COMPOUND. ALL BOLTS SHALL BE TIGHTENED USING A TORQUE WRENCH TO MANUFACTURER'S SPECIFICATIONS.

3 C502 FIRE HYDRANT DETAIL
NOT TO SCALE

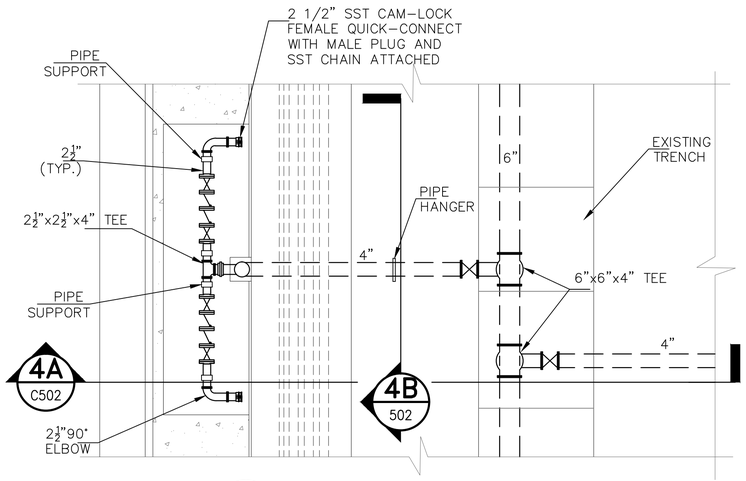

4 C502 WATER SERVICE ASSEMBLY
NOT TO SCALE

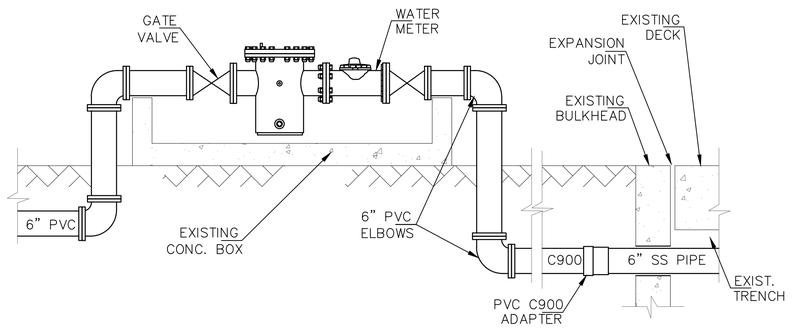

5 C502 WATER METER
NOT TO SCALE

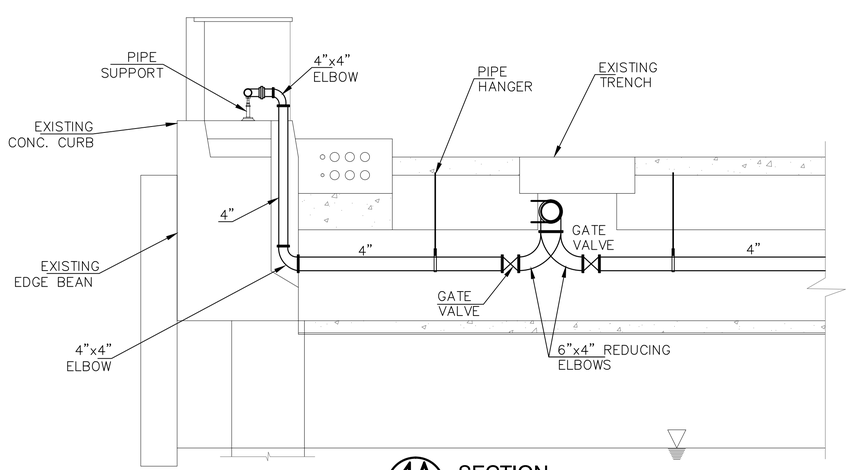

4A C502 SECTION
NOT TO SCALE

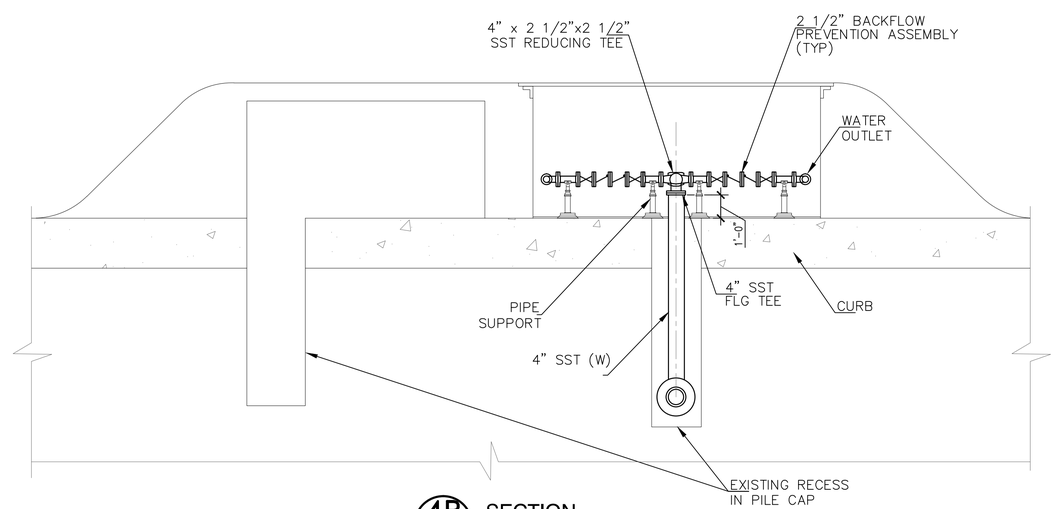

4B C502 SECTION
NOT TO SCALE

IF SHEET IS LESS THAN (22" x 34") IT IS A REDUCED PRINT, SCALE REDUCED ACCORDINGLY

SYM	DESCRIPTION	DATE	APPR
---	---	---	---

SEAL

A/E INFO

APPROVED

FOR COMMANDER NAVFAC

ACTIVITY

SATISFACTORY TO DATE

DES RP | DRW RP | CHK JF

PROJECT MANAGER H. KING

IPT TECH. BRANCH HEAD S. ZAVOYSKI

CHIEF ENG/ARCH (CORE) J. FRANK

DEPARTMENT OF THE NAVY
NAVAL FACILITIES ENGINEERING COMMAND
NAVAL FACILITIES ENGINEERING COMMAND SOUTHEAST
NAVAL AIR STATION JACKSONVILLE
IPT SOUTH ATLANTIC
AUTEC SITE 1
ANDROS ISLAND, BAHAMAS

PIER 1902 REPAIRS

UTILITY DETAILS

SCALE: NONE
EPROJECT NO.: 1302903
CONSTR. CONTR. NO.: N69450-XX-C-XXXX
NAVFAC DRAWING NO.: 15079038
SHEET 13 OF 56

C502

DRAWFORM REVISION: 5 APRIL 2012

FILE NAME: P:\CBL\project_files\FLORIDA\nas key west f(b)h\h00213\autec pier repairs-1302903\working technical files\Dwgs\Sheet Files\1 - CNC502 UTILITY DETAILS.dwg LAYOUT NAME: C502 UTILITY DETAILS PLOTTED: Monday, February 09, 2015 - 2:35pm USER: douglas.szilagyi

GENERAL NOTES & DESIGN CRITERIA

STRUCTURAL DESIGN SCOPE

1) PROVIDE REPAIRS TO EXISTING FACILITY FOR SAFE AND PROPER BERTHING OF VESSELS. A 2010 INSPECTION REPORT BY HALCROW INC. DETERMINED THE EXISTING FACILITY TO BE IN POOR CONDITION (SUBSTRUCTURE CONDITION INDEX RATING OF 45) AND PARTIALLY OPERATIONAL. THE INTENT OF THE REPAIRS ARE TO ACHIEVE A FULLY OPERATIONAL FACILITY.

DESIGN CRITERIA

1) UFC 3-301-01, STRUCTURAL ENGINEERING, JANUARY 2012
2) UFC 4-150-02, DOCKSIDE UTILITIES FOR SHIP SERVICE, MARCH 2011
3) UFC 4-151-10, GENERAL CRITERIA FOR WATERFRONT CONSTRUCTION, SEPTEMBER 2001
4) UFC 4-152-01, DESIGN OF PIERS AND WHARVES, SEPTEMBER 2005

DESIGN LOADS

1) DEAD LOADS:
   STRUCTURE SELF WEIGHT
2) LIVE LOADS:
   DECK AREA = 600 PSF UNIFORM
3) WHEEL LOADS:
   DECK AREA = AASHTO HS-20-44, 20TON LIFT TRUCK
4) TRENCH COVERS = AASHTO HS-20-44, 20TON LIFT TRUCK
5) CRANE LOADS = MOBILE CRANES (SEE BELOW & LOADING PLANS ON SHEET S002-S005)

28 TON MOBILE CRANE OUTRIGGER LOADS

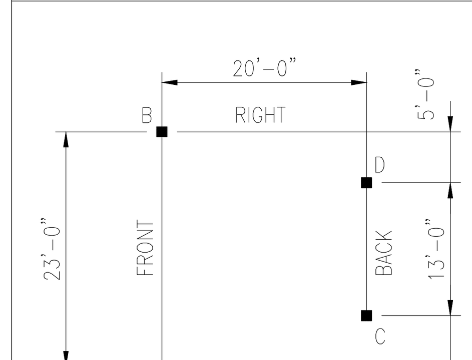

OUTRIGGER LOCATION	LOAD (KIPS)
A	52.8
B	31.7
C	21.2
D	0.0

NOTE: OUTRIGGER LOADS ARE BASED ON A NATIONAL 11105 28-TON CRANE WITH AN 8 KIP LIFT LOAD AT THE END OF A 30 FT BOOM RADIUS ROTATED OVER THE LEFT FRONT OUTRIGGER (90 DEGREE ROTATION).

80 TON MOBILE CRANE OUTRIGGER LOADS

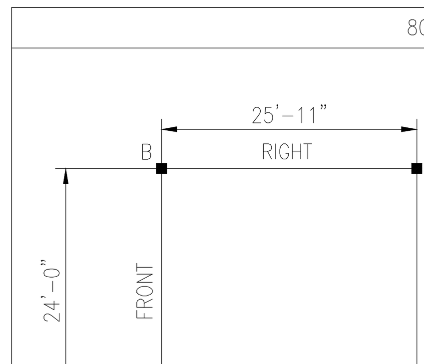

OUTRIGGER LOCATION	LOAD (KIPS)
A	0.00
B	47.0
C	48.5
D	118.9

NOTE: OUTRIGGER LOADS ARE BASED ON A GROVE RT880E 80-TON CRANE WITH AN 30 KIP LIFT LOAD AT THE END OF A 40 FT BOOM RADIUS ROTATED OVER THE RIGHT BACK OUTRIGGER (135 DEGREE ROTATION).

6) BERTHING LOADS

VESSEL NAME	LOA(FT)	BEAM(FT)	DRAFT(FT)	DISPLACEMENT (FT)	BERTHING SPEED(FT/SEC)
RANGER	192	40	15	1659	1.5
RANGER ROVER	180	40	15	675	1.5
RANGE MASTER	110	26	10.5	320	1.5
LCM(8)-6775	74	21	4.75	118	1.5

7) WIND LOADS:
   BASIC WIND SPEED = 148 MPH (128.7 KNOTS)

EXISTING CONDITION

1) REFER TO RECORD DRAWINGS, THOMAS B. BOURNE ASSOCIATES, INC. DATED MAY 5, 1963 (BUREAU OF YARDS AND DOCKS DRAWINGS 975739 TO 975739) AND DRAWINGS BY NAVFAC SOUTHERN DIVISION DATED NOVEMBER 1, 1982 (NAVFAC DRAWINGS 5099652 TO 5099671 AND 5135711). REFER TO ENGINEERING REPORTS, INSPECTION REPORT AND LOAD ANALYSIS REPORT BY HALCROW, INC. DATED JANUARY 2010 AND FEBRUARY 17, 2012 RESPECTIVELY. THE GOVERNMENT MAKES NO CLAIM REGARDING THE ACCURACY OF THESE DRAWINGS AND REPORTS. THE CONTRACTOR IS RESPONSIBLE TO FIELD VERIFY ALL INFORMATION REPRESENTED IN THESE DRAWINGS AND REPORTS. RECORD DRAWINGS ARE INCORPORATED INTO THIS CONTRACT BY REFERENCE. RECORD DRAWINGS AND REPORTS ARE AVAILABLE UPON REQUEST.
2) EXISTING MATERIAL STRENGTHS ARE BASED ON 2010 INSPECTION REPORT BY HALCROW, INC. AND 1982 DRAWINGS BY NAVFAC SOUTHERN DIVISION. THE CONTRACTOR MUST HIRE A TESTING AGENCY TO CONFIRM THE MATERIAL STRENGTHS PRIOR TO ANY REPAIR WORK. THE MATERIAL STRENGTHS PER THE EXISTING DRAWINGS ARE AS FOLLOWS:

1963 CAST-IN-PLACE CONCRETE:	f'c = 3,000 PSI
1963 REBAR	fy = 60,000 PSI
1963 STRUCTURAL STEEL:	fy = 33,000 PSI
1982 CAST-IN-PLACE CONCRETE:	f'c = 4,000 PSI
1982 PRECAST CONCRETE:	f'c = 6,000 PSI
1982 REBAR	fy = 60,000 PSI (EPOXY COATED PER ASTM D 3963-81)
1982 PRESTRESSING STRANDS:	fy = 270,000 PSI
1983 STRUCTURAL STEEL:	fy = 36,000 PSI (COMPLETELY EMBEDDED OR GALV)

GENERAL INFORMATION

1) THESE NOTES ARE NOT INTENDED TO REPLACE THE SPECIFICATIONS. SEE SPECIFICATION FOR REQUIREMENTS IN ADDITION TO GENERAL NOTES.
2) THE STRUCTURAL DRAWINGS AND SPECIFICATIONS REPRESENT THE FINISHED STRUCTURE AND DO NOT INDICATE THE MEANS OR METHODS OF CONSTRUCTION. THE CONTRACTOR SHALL SUPERVISE AND DIRECT THE WORK AND SHALL BE SOLELY RESPONSIBLE FOR ALL CONSTRUCTION MEANS, METHODS, PROCEDURES, TECHNIQUES AND SEQUENCE.
3) DO NOT SCALE DIMENSIONS FROM DRAWINGS. THE CONTRACTOR SHALL REQUEST, IN WRITING, FROM THE GOVERNMENT ANY NECESSARY DIMENSIONS NOT SHOWN ON THE DRAWINGS.
4) REPRODUCTION OF CONTRACT DRAWINGS SHALL NOT BE USED AS SHOP DRAWINGS UNDER ANY CIRCUMSTANCE.
5) CONTRACTOR SHALL FIELD VERIFY ALL DIMENSIONS AND CONDITIONS OF EXISTING STRUCTURE AND SITE THAT ARE AFFECTED BY NEW WORK BEFORE PRECEDING. NOTIFY CONTRACTING OFFICER OF ANY DISCREPANCIES THAT IMPACT NEW WORK PRIOR TO MOBILIZATION TO THE SITE.
6) REFERENCE ELEVATION OF 0.00 FEET REFERENCED TO MEAN LOW WATER LEVEL. FOLLOWING IS THE TIDAL INFORMATION AVAILABLE FROM THE EXISTING DESIGN DRAWINGS (REF. PIER REPAIR NUSC AUTEC BY NAVFAC SOUTHERN DIVISION DATED NOVEMBER 1, 1982 NAVFAC DRAWINGS 5099652 TO 5099671:

MEAN HIGH WATER(MHW)	+3.00FT
MSL	1.50FT
MEAN LOW WATER(MLW)	0.00FT

7) ALL DIVING OPERATIONS SHALL BE CONDUCTED IN ACCORDANCE WITH CONTRACT REQUIREMENTS AND CONTRACTOR'S SAFETY PRACTICES.
8) CONTRACTOR SHALL PROVIDE UNDERWATER & UNDER-PIER VIDEO SURVEY BEFORE AND AFTER CONSTRUCTION.

INSPECTION NOTES

1) CONTRACTOR MUST HIRE AN ENGINEER/DIVE FIRM FOR INSPECTION SERVICE TO VERIFY THE FINDING OF THE 2010 INSPECTION REPORT BY HALCROW, INC. VIA UNDERWATER AND SURFACE INSPECTION. THE INSPECTION MUST VERIFY TYPE, LOCATION, AND SIZE OF ALL DEFECTS NOTED IN THE 2010 REPORT AND MUST RECORD ANY ADDITIONAL DEFECTS THAT WERE NOT INCLUDED IN THE 2010 REPORT. RESULTS OF THE INSPECTION SHALL BE PROVIDED TO NAVFAC IN A WRITTEN REPORT.
2) ANY WORK THAT IS IN ADDITION TO THE REPAIRS SHOWN ON THESE CONSTRUCTION DRAWINGS MUST BE APPROVED BY NAVFAC PRIOR TO CONSTRUCTION. ADDITION REPAIRS MUST BE PRESENTED WITH A COST ESTIMATE BASED ON UNIT COST.

CONSTRUCTION NOTES

1) ALL CRANE OPERATIONS SHALL BE CONDUCTED IN ACCORDANCE WITH CONTRACT, FEDERAL, STATE AND LOCAL REQUIREMENTS. CONTRACTOR IS RESPONSIBLE TO DETERMINE IF CONSTRUCTION EQUIPMENT CAN OPERATE SAFELY ON THE PIER.
2) BOTTOM DEBRIS GENERATED BY THE CONTRACTOR SHALL BE REMOVED AT NO ADDITIONAL COST TO THE GOVERNMENT. DIVERS SHALL BE USED TO LOCATE AND RECOVER CONTRACTOR GENERATED BOTTOM DEBRIS. THE USE OF CLAM SHELL BUCKETS OR SIMILAR METHODS IS PROHIBITED.
3) PROVIDE TURBIDITY CURTAIN AROUND ALL ACTIVE CONSTRUCTION AREAS. TURBIDITY CURTAIN SHALL EXTEND FROM WATER SURFACE TO MUDLINE. ANCHOR PER MANUFACTURER'S REQUIREMENTS.
4) CONTRACTOR IS RESPONSIBLE FOR THE EMPLOYMENT OF A DELEGATED ENGINEER TO ANALYZE AND DESIGN ALL NECESSARY SHORING AND BRACING AS REQUIRED PER CONTRACTOR'S MEANS AND METHODS OF CONSTRUCTION. SHORING AND BRACING DRAWINGS SHALL BE SIGNED AND SEALED BY A REGISTERED PROFESSIONAL ENGINEER AND SHALL BE REVIEWED BY NAVFAC PRIOR TO CONSTRUCTION.
5) DO NOT ALLOW ANY VEHICLE TRAFFIC ON OR DIRECTLY ABOVE CAST-IN-PLACE CONCRETE UNTIL THE CONCRETE HAS REACHED ITS 28-DAY DESIGN COMPRESSIVE STRENGTH. KEEP ALL VEHICLE TRAFFIC AT LEAST 23 FEET AWAY FROM CAST-IN-PLACE CONCRETE FOR A MINIMUM OF 24 HOURS AFTER THE CONCRETE IS PLACED TO AVOID BONDING FAILURE DUE TO VEHICLE INDUCED VIBRATION & DEFLECTION.

STRUCTURAL DEMOLITION NOTES

1) REMOVE ALL ITEMS AS DETAILED IN THE DRAWINGS SHEETS. REFER TO CIVIL & ELECTRICAL SHEETS FOR ANY ADDITIONAL REQUIREMENTS.
2) SEE EXISTING CONCRETE FENDER REMOVAL NOTES FOR ADDITIONAL DEMOLITION INFORMATION.
3) IT IS ANTICIPATED THAT THE EXISTING PRECAST CONCRETE PLANKS DO NOT HAVE GROUTED KEYWAYS. IF GROUTED KEYWAYS ARE DISCOVERED DURING DEMOLITION, THE CONTRACTING OFFICER SHALL BE NOTIFIED FOR RESOLUTION.

EXISTING CONCRETE FENDER REMOVAL NOTES

1) EXISTING CONCRETE FENDER PANELS MAY BE REMOVED IF REQUIRED TO PERFORM THE DESIGNED REPAIRS.
2) REMOVE AND STORE FENDER PANELS IN A LOCATION APPROVED BY THE CONTRACTING OFFICER.
3) CONTRACTOR MUST RE-INSTALL OR REPLACE EXISTING PANELS AT COMPLETION OF REPAIR CONSTRUCTION ACCORDING TO THE DETAILS ON SHEET S504. CONTRACTOR MAY INSTALL NEW CONCRETE FENDERS TO MATCH OR NEW MODULAR RUBBER FENDERS ONLY IF THE NEW FENDER SYSTEM DOES NOT EXCEED THE COST OF RE-INSTALLING THE EXISTING SYSTEM. IF CONTRACTOR ELECTS TO INSTALL A NEW FENDER SYSTEM THEN CONTRACTOR MUST DISPOSE OF EXISTING PANELS IN ACCORDANCE WITH THE CONTRACTING OFFICER. ANY NEW CONCRETE FENDER SYSTEM CAN NOT EXCEED THE WEIGHT AND THE THICKNESS OF THE EXISTING SYSTEM. FOR RUBBER FENDER SYSTEM REQUIREMENTS SEE NOTES BELOW. FINAL FENDER SYSTEM MUST BE A COMPLETE SYSTEM USING ONE TYPE OF FENDER, CONCRETE OR RUBBER, AND NOT A COMBINATION OF BOTH. NEW FENDER SYSTEM ALONG GRID 33 MUST BE RUBBER PER DETAIL 7/S504.

REPAIR CONCRETE

1) ALL CONCRETE CONSTRUCTION SHALL BE IN ACCORDANCE WITH THE PROVISIONS OF THE AMERICAN CONCRETE INSTITUTE (ACI) BUILDING CODE REQUIREMENTS FOR STRUCTURAL CONCRETE (ACI 318), JANUARY 2008.
   A. THE 28-DAY CONCRETE COMPRESSIVE STRENGTH SHALL BE A MINIMUM OF 3,000 PSI.
   B. UNLESS OTHERWISE INDICATED, MINIMUM CONCRETE COVER OVER STEEL REINFORCEMENT SHALL BE 3 INCHES UNLESS NOTED OTHERWISE IN THE DETAILS.
   C. REFER TO SPECIFICATIONS FOR ADDITIONAL REQUIREMENTS.
2) STEEL REINFORCEMENT SHALL MEET THE REQUIREMENTS OF ASTM A615-12 GRADE 60.
3) DO NOT USE EPOXY BONDING COMPOUNDS ON EXISTING CONCRETE PREPARED FOR CONCRETE REPAIRS.
4) REPAIR CONCRETE MUST BE A FLOWABLE MIX THAT CAN BE PUMPED.
5) THE HOSE USED TO DELIVERY THE CONCRETE TO THE POINT OF PLACEMENT SHALL HAVE A PRESSURE GAUGE AND SHUT OFF VALVE AT THE NOZZLE. FORMS SHALL HAVE PORTS THAT ACCOMMODATE THE HOSE NOZZLE FOR CONCRETE DELIVERY AND SHALL HAVE PORTS FOR VENTILATING AIR POCKETS. PORTS SHALL BE PVC.

CAST-IN-PLACE CONCRETE TOPPING (OVER PRECAST PLANKS)

1) ALL CONCRETE CONSTRUCTION SHALL BE IN ACCORDANCE WITH THE PROVISIONS OF THE AMERICAN CONCRETE INSTITUTE (ACI) BUILDING CODE REQUIREMENTS FOR STRUCTURAL CONCRETE (ACI 318), JANUARY 2008.
   A. THE 28-DAY CONCRETE COMPRESSIVE STRENGTH SHALL BE A MINIMUM OF 4,000 PSI.
   B. UNLESS OTHERWISE INDICATED, MINIMUM CONCRETE COVER OVER STEEL REINFORCEMENT SHALL BE 3 INCHES.
   C. REFER TO SPECIFICATIONS FOR ADDITIONAL CIP CONCRETE REQUIREMENTS.
2) EPOXY CHEMICAL EMBED MATERIAL SHALL MEET THE REQUIREMENTS OF ASTM C881 TYPE IV, GR 3.
3) STEEL REINFORCEMENT SHALL MEET THE REQUIREMENTS OF ASTM A615-12 GRADE 60. ALL REINFORCEMENT SHALL BE COATED PER ASTM A934-07.
4) PROVIDE NON-SHRINK GROUT MEETING THE REQUIREMENTS OF ASTM C1107 WITH A WATER-SOLUBLE CHLORIDE CONTENT LESS THAN 0.10% BY MASS TO TOTAL MASS OF THE TOTAL CEMENTITIOUS MATERIALS. PROVIDE A MINIMUM 5,000 PSI 28-DAY COMPRESSIVE STRENGTH GROUT.
5) FOR CIP CONCRETE AGAINST EXISTING CONCRETE:
   A. PREPARE EXISTING CONCRETE SURFACE AS REQUIRED BY EPOXY BONDING COMPOUND MANUFACTURER
   B. PROVIDE EPOXY BONDING MEETING REQUIREMENTS OF ASTM C881 TYPE 2, GRADE 1 WITH CLASS MATCHING REQUIRED PLACEMENT AMBIENT TEMPERATURE RANGE.

PRECAST CONCRETE

1) ALL PRECAST CONCRETE CONSTRUCTION SHALL BE IN ACCORDANCE WITH THE PROVISIONS OF THE AMERICAN CONCRETE INSTITUTE "BUILDING REQUIREMENTS FOR STRUCTURAL CONCRETE" (ACI 318) AND THE DESIGN RECOMMENDATIONS OF THE PRECAST CONCRETE INSTITUTE MANUAL, "PCI DESIGN HANDBOOK - PRECAST AND PRESTRESSED CONCRETE".
2) THE PRECAST CONCRETE SUPPLIER (PCS) SHALL PRODUCE A COMPLETE SET OF SHOP DRAWINGS AND CALCULATIONS SEALED BY A PROFESSIONAL ENGINEER LICENSED IN THE UNITED STATES. SHOP DRAWINGS SHALL INCLUDE ALL INFORMATION REQUIRED TO PROPERLY INSTALL THE PRECAST CONCRETE AND ANY DETAILS REQUIRED FOR SPECIAL INTERFACING WITH OTHER ELEMENTS OF THE STRUCTURE. DESIGN ALL PRECAST CONCRETE AND CONNECTIONS TO RESIST THE VERTICAL AND HORIZONTAL LOADS INDICATED ON THE CONTRACT DOCUMENTS AS WELL AS ALL ERECTION FORCES.
3) REFER TO SHEET S501-504 FOR ADDITIONAL PRECAST CONCRETE REQUIREMENTS.
4) CONCRETE DENSITY SHALL BE NORMAL WEIGHT (+144 PCF) UNLESS SPECIFICALLY NOTED OTHERWISE.
5) DESIGN ALL ELEMENTS AND CONNECTIONS TO RESIST THE VERTICAL AND HORIZONTAL LOADS INDICATED ON THE CONTRACT DOCUMENTS. DESIGN AND PROVIDE ALL NECESSARY MATERIAL FOR ALL OF THE PRECAST CONCRETE CONNECTIONS INDICATED ON THE CONTRACT DRAWINGS INCLUDING BUT NOT LIMITED TO ALL LOOSE HARDWARE, BEARING MATERIAL, AND WELDING. GALVANIZE ALL STEEL CONNECTION MATERIAL EXPOSED TO WEATHER.
6) DESIGN AND PROVIDE ALL EMBEDDED ITEMS SHOWN ON THE CONTRACT DOCUMENTS TO RESIST THE LOADS INDICATED. ALL LOADS INDICATED ARE SERVICE LEVEL LOADS UNLESS NOTED OTHERWISE.
7) MINIMUM STRENGTH OF PRECAST SHALL BE fc' = 6,000 PSI.
8) PRECAST REINFORCING SHALL MEET THE REQUIREMENTS OF ASTM A615-12 GRADE 60. ALL REINFORCEMENT SHALL BE COATED PER ASTM A934-07.
9) CONTRACTOR SHALL CAREFULLY FIELD MEASURE TO OBTAIN THE DIMENSIONS FOR THE NEW PRECAST. THE PRECASTER SHALL CONSIDER THE JOINT REQUIREMENTS BETWEEN THE NEW AND EXISTING PRECAST DURING THE DESIGN FOR INSTALLATION TOLERANCE.
10) PRECAST SHALL NOT BE PRESTRESSED.

STEEL

1) THE DESIGN, FABRICATION AND ERECTION OF STRUCTURAL STEEL FOR BUILDINGS AND STRUCTURES SHALL BE IN ACCORDANCE WITH THE SPECIFICATION FOR STRUCTURAL STEEL BUILDINGS, ANSI/AISC 360-05, MARCH 9, 2005.
2) THE REQUIRED MATERIAL SPECIFICATION FOR STRUCTURAL STEEL MEMBERS ARE AS FOLLOWS:
   SQUARE AND RECTANGULAR HSS-------------ASTM A500, GRADE B
   PLATES, CHANNELS AND ANGLES-------------ASTM A36
   ANCHOR RODS W/ NUT AND WASHER-----------ASTM F1554, GRADE 36
   THREADED ROD--------------------------ASTM A36
   WELDING ELECTRODE---------------------- AWS D1.1, E70XX
   HOT DIPPED GALVANIZED HARDWARE---------- ASTM A153
   HOT DIPPED GALVANIZED PRODUCTS----------- ASTM A123, GRADE 100
   CLEANING PRIOR TO HDG------------------ SSPC SP10, NEAR WHITE
3) ALL WELDED AND MANUFACTURED STEEL PRODUCTS SHALL BE HOT DIPPED GALVANIZED TO THE REQUIREMENTS OF ASTM A123-08 AFTER ALL WELDING AND MANUFACTURING PROCESSES ARE COMPLETED. REMOVE ALL WELDING SLAG AND FLUX FROM STEEL SURFACE PRIOR TO CLEANING. ALL STEEL SHAPES SHALL BE CLEANED TO THE REQUIREMENTS OF SSPC-SP10/NACE NO. 2 FINISH PRIOR TO GALVANIZING.
4) ALL WELDING SHALL BE IN ACCORDANCE WITH THE STRUCTURAL WELDING CODE, AWS D1.1; LATEST ADDITION.
5) WELDING OF HOT DIPPED GALVANIZED ITEMS SHALL BE IN ACCORDANCE WITH AWS WZC/D19.0, "WELDING ZINC-COATED STEEL". REMOVE GALVANIZED COATING BY GRINDING OR OTHER ACCEPTABLE METHOD A MINIMUM OF 2 INCHES IN ALL DIRECTIONS FROM THE WELD CENTERLINE. AFTER WELDING, CLEAN & REPAIR WELD EFFECTED ZONE(S) AS REQUIRED BY MIL-P-21035B AND ASTM A780. PROVIDE COATING REPAIR IN ACCORDANCE WITH MIL-P-21035B WITH A MINIMUM DRY FILM THICKNESS OF 10MILS.
6) DO NOT MIX ITEMS OF DIFFERENT GRADE OF HARDWARE ON THE SAME CONNECTION. ALL HARDWARE SHALL BE HOT DIPPED GALVANIZED TO ASTM A153-05.

PILE/PILE CAP FIBERGLASS FORMS

1) PROVIDE PERMANENT FIBERGLASS FORMS AS SHOWN ON THE DRAWINGS INCLUDING ANY NECESSARY CONNECTIONS, SHORING, AND BRACING TO HOLD FORMS IN PLACE BEFORE, DURING, AND AFTER CONCRETE PLACEMENT.
2) FIBERGLASS FORMS AND ALL ASSOCIATED CONNECTIONS, SHORING, & BRACING, SHALL BE DESIGNED BY A LICENSED ENGINEER EMPLOYED BY THE FORM SUPPLIER.
3) FIBERGLASS FORMS ARE PERMANENT AND THEREFORE SHALL BE DESIGNED TO REMAIN IN PLACE FOR THE LIFE OF THE STRUCTURE. ALL FASTENERS TO THE EXISTING CONCRETE SHALL BE ASTM A316 STAINLESS STEEL.
4) FIBERGLASS FORMS SHALL BE NON-CORROSIVE TRANSLUCENT FIBERGLASS REINFORCED PLASTIC (FRP) WITH MATERIAL PROPERTIES AS FOLLOWS:
   MINIMUM TENSILE STRENGTH-----------------15,000 PSI (PER ASTM D638)
   MINIMUM FLEXURAL STRENGTH--------------- 25,000 PSI (PER ASTM D796)
   MINIMUM FLEXURAL MODULUS OF ELASTICITY------ 700,000 PSI (PER ASTM D790)
   WALL THICKNESS----------------------- ⅛" TO ¼"
   MAXIMUM WATER ABSORPTION---------------- 1% (PER ASTM D570)

UNDERWATER EPOXY

1) PROVIDE UNDERWATER EPOXY AS SHOWN ON THE DRAWINGS FOR ALL EPOXY APPLIED TO THE PIER SUBSTRUCTURE.
2) UNDERWATER EPOXY SHALL BE A FLEXIBLE TWO-COMPONENT EPOXY ADHESIVE SPECIFICALLY DESIGNED FOR PRESSURE GROUTING IN CONCRETE SUBMERGED IN SALT WATER.
3) UNDERWATER EPOXY SHALL HAVE MATERIAL PROPERTIES AS FOLLOWS:
   MINIMUM TENSILE STRENGTH------------------ 8,000 PSI (PER ASTM D638)
   MINIMUM FLEXURAL STRENGTH----------------- 15,800 PSI (PER ASTM D695)
   MINIMUM BOND STRENGTH ------------------ 2,400 PSI FOR 2 DAY MOIST (PER ASTM C882)
   2,700 PSI FOR 14 DAY MOIST

RUBBER FENDER SYSTEM

1) PROVIDE RUBBER FENDER SYSTEM AS A REPLACEMENT OPTION FOR THE EXISTING CONCRETE FENDER IF EXISTING FENDER NEEDS TO BE REMOVED FOR CONSTRUCTION ACCESSIBILITY (SEE EXISTING CONCRETE FENDER REMOVAL NOTES ON THIS SHEET).
2) THE RUBBER FENDER SYSTEM SHALL BE DESIGNED BY A LICENSED ENGINEER EMPLOYED BY THE FENDER SUPPLIER.
3) CONSTRUCTION SHALL BE MADE OF NON-CORROSIVE MATERIALS INTENDED FOR SALT WATER MARINE ENVIRONMENTS.
4) FENDER SYSTEM SHALL BE DESIGNED FOR THE VESSEL INFORMATION PROVIDED IN THE DESIGN LOAD SECTION ON THIS SHEET.
5) RUBBER FENDER SYSTEM SHALL HAVE MATERIAL PROPERTIES AS FOLLOWS:
   MINIMUM TENSILE STRENGTH----------------- 2,300 PSI (PER ASTM D638)
   MINIMUM BOND STRENGTH (RUBBER TO STEEL)----- 1,000 PSI (PER ASTM D429)

ABBREVIATIONS

AB	ABANDONED
AISC	AMERICAN INSTITUTE OF STEEL CONSTRUCTION
ANSI	AMERICAN NATIONAL STANDARDS INSTITUTE
AP	AFT PERPENDICULAR
ASTM	ASTM INTERNATIONAL
AWS	AMERICAN WELDING SOCIETY
@	AT
&	AND
APPROX	APPROXIMATE
BOT, BOTT	BOTTOM
℄	CENTER LINE
CA	COMPRESSED AIR
CG	CONTINUOUS GROUND
CIP	CAST IN PLACE
CLR	CLEAR, CLEARANCE
CONC	CONCRETE
CONT	CONTINUED, CONTINUOUS
CP	COMPLETE PENETRATION
CU	COPPER
DB	DOUBLE BITT
DBL	DOUBLE
DEMO	DEMOLITION
DET	DETAIL
DIA OR Ø	DIAMETER
DIM	DIMENSION
DWG	DRAWING
EA	EACH
EF	EACH FACE
EL	ELEVATION
ELEC OR ELEC'L	ELECTRICAL
EMBED	EMBEDMENT
EQUIP	EQUIPMENT
EW	EACH WAY
EXIST	EXISTING
EXP	EXPANSION
EJ OR EXP JT	EXPANSION JOINT
FFF	FOAM FILLED FENDER
FO	FUEL OIL
FP	FORWARD PERPENDICULAR
FT	FOOT, FEET
FW	FRESH WATER
GOV'T	GOVERNMENT
ID	INSIDE DIAMETER
HDG	HOT DIPPED GALVANIZED
HORIZ	HORIZONTAL
IN	INCH
INFO	INFORMATION
LB	POUND
MACH	MACHINE
MAX	MAXIMUM
MAT'L	MATERIAL
MB	MACHINE BOLT
MCON	MILITARY CONSTRUCTION
MECH	MECHANICAL
MIL	MILITARY
MIN	MINIMUM
MISC	MISCELLANEOUS
MLW	MEAN LOW WATER
MLLW	MEAN LOWER LOW WATER
MPH	MILES PER HOUR
MSL	MEAN SEA LEVEL
N	NORTH
NAVFAC	NAVAL FACILITIES ENGINEERING COMMAND
NIC	NOT IN CONTRACT
No	NUMBER
NTS, NS	NOT TO SCALE
OC	ON CENTER
OD	OUTSIDE DIAMETER
OPP	OPPOSITE
OH	OPPOSITE HAND
OW	OILY WASTE
ℙ	PLATE
P/N	PART NUMBER
PMPCM	POLYMER MODIFIED PORTLAND CEMENT MORTAR
PI	POST INSTALLED
PSF	POUNDS PER SQUARE FOOT
PSI	POUNDS PER SQUARE INCH
PVC	POLYVINYL CHLORIDE
PW	POTABLE WATER
PWC	PUBLIC WORKS COMMAND
RD	ROAD
REF	REFERENCE
REINF	REINFORCED, REINFORCING
REQ'D	REQUIRED
S	SOUTH
SCH	SCHEDULE
SECT	SECTION
SHT	SHEET
SIM	SIMILAR
SPECS	SPECIFICATIONS
SQ	SQUARE
SR	SEWER
SS	STAINLESS STEEL
ST	STREET
STA	STATION
STD	STANDARD
STL	STEEL
STM	STEAM
STR	STAGGER
SUBSTA	SUBSTATION
SW	SALT WATER
SYMM	SYMMETRICAL
T	TON
T & B	TOP & BOTTOM (TOP & BOT)
TEL	TELEPHONE
THRD	THREADED
TYP	TYPICAL
UFC	UNIFIED FACILITIES CRITERIA
UHMWP	ULTRA HIGH MOLECULAR WEIGHT PLASTIC
UNO	UNLESS NOTED OTHERWISE
V	VOLT
VAR	VARIES
VERT	VERTICAL
W/	WITH
W/O	WITHOUT
WP	WORK POINT
WW	WASTE WATER
Y & D	BUREAU OF YARDS & DOCKS

SYM | DESCRIPTION | DATE | APPR

SEAL

A/E INFO

APPROVED

FOR COMMANDER NAVFAC / B.L.T.L.

ACTIVITY

SATISFACTORY TO DATE

DES	DAS	DRW	DAS	CHK	KW
PROJECT MANAGER	H. KING				
IPT TECH. BRANCH HEAD	S. ZAVOYSKI				
CHIEF ENG/ARCH (CORE)	KW				

DEPARTMENT OF THE NAVY
NAVAL FACILITIES ENGINEERING COMMAND
NAVAL FACILITIES ENGINEERING COMMAND SOUTHEAST
IPT SOUTH ATLANTIC NAVAL AIR STATION JACKSONVILLE

AUTEC SITE 1 ANDROS ISLAND, BAHAMAS

PIER 1902 REPAIRS

GENERAL NOTES AND ABBREVIATIONS

SCALE: SCALE
EPROJECT NO.: 1302903
CONSTR. CONTR. NO. N69450-XX-C-XXXX
NAVFAC DRAWING NO. 15079039
SHEET 14 OF 56

S001

DRAWFORM REVISION: 7 AUGUST 2009

FILE NAME: P:\CIBL\project_files\FLORIDA\nas key west fl}h}n00213\autec pier repairs~1302903\working technical files\Dwgs\Sheet Files\3 - STRU1902-S-001.dwg LAYOUT NAME: S001 GENERAL NOTES AND ABBREVIATIONS PLOTTED: Thursday, February 19, 2015 - 3:34pm USER: douglas.szilagyi

SHEET FORMAT IS 22" X 34". IF PRINTED SHEET IS NOT 22" X 34", THEN IT IS NOT TO SCALE

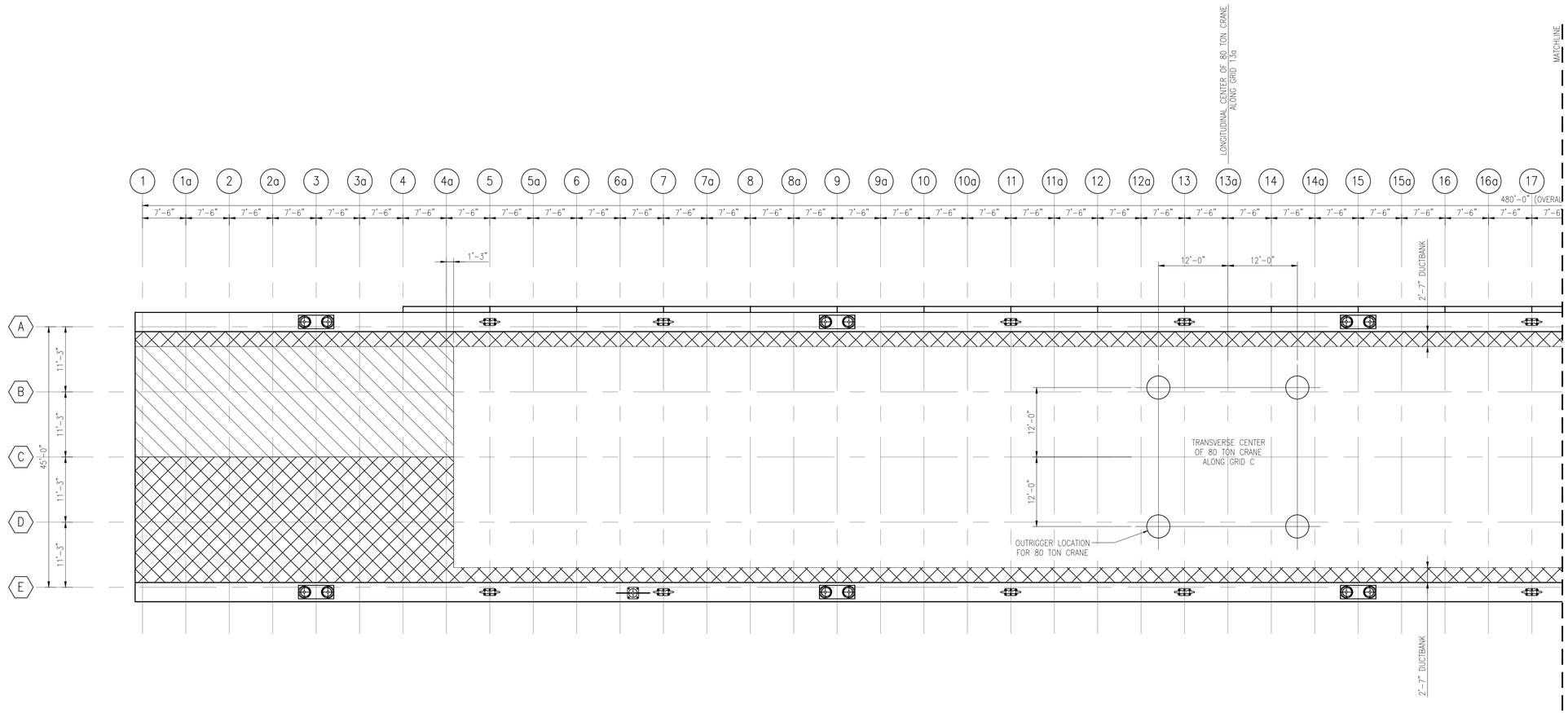

1 EXISTING LOADING PLAN – GRID 1–17

Scale: 3/32" = 1'–0"

N
PLAN NORTH

PLAN NOTES:

1. DENOTES NO LOAD ZONE (VEHICLE AND LIFTING LOADS NOT PERMITTED).
2. DENOTES TEMPORARY LOAD ZONE:
   A. VEHICLE LOADS PERMITTED
   B. WEIGHT LIFTING NOT PERMITTED
3. DENOTES ALLOWABLE LOCATION FOR 80 TON CRANE OUTRIGGER
4. THIS SHEET IS FOR INFORMATION ONLY AND IS BASED ON THE HALCROW ENGINEERING ANALYSIS REPORT DATED 2/17/12. CONTRACTOR SHALL REVIEW THE ACTUAL REPORT FOR FURTHER GUIDANCE ON LOAD LIMITATIONS.

SYM	DESCRIPTION	DATE	APPR
---	---	---	---

NAVFAC

SEAL

A/E INFO

APPROVED

FOR COMMANDER NAVFAC / B.L.T.L.

ACTIVITY

SATISFACTORY TO DATE

DES DAS DRW DAS CHK KW

PROJECT MANAGER H. KING

IPT TECH. BRANCH HEAD S. ZAVOYSKI

CHIEF ENG/ARCH (CORE) KW

DEPARTMENT OF THE NAVY
NAVAL FACILITIES ENGINEERING COMMAND SOUTHEAST
IPT SOUTH ATLANTIC
NAVAL FACILITIES ENGINEERING COMMAND
NAVAL AIR STATION JACKSONVILLE
AUTEC SITE 1
ANDROS ISLAND, BAHAMAS

PIER 1902 REPAIRS

EXISTING LOADING PLAN – GRID 1–17

SCALE: SCALE

EPROJECT NO.: 1302903

CONSTR. CONTR. NO.: N69450–XX–C–XXXX

NAVFAC DRAWING NO.: 15079040

SHEET 15 OF 56

S002

DRAWFORM REVISION: 7 AUGUST 2009

SHEET FORMAT IS 22" X 34". IF PRINTED SHEET IS NOT 22" X 34", THEN IT IS NOT TO SCALE

FILE NAME: P:\CBI\project_files\FLORIDA\ross key west ll\hjd00213\autec pier repairs-1302903\working technical files\Dwgs\Sheet Files\3 - SITU1902-S-002.dwg LAYOUT NAME: 1902-S-002 PLOTTED: Thursday, February 19, 2015 - 3:34pm USER: douglas.szilagyi

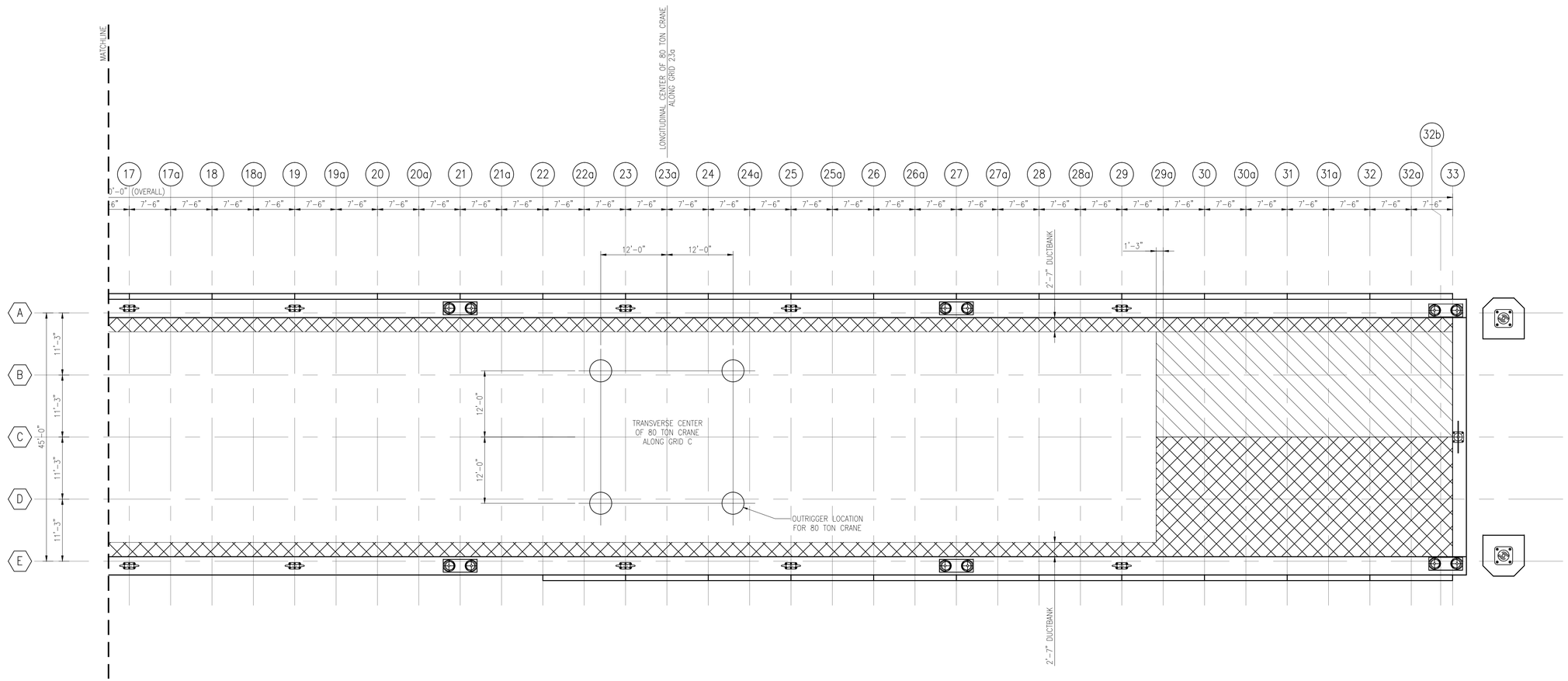

1 EXISTING LOADING PLAN – GRID 17–33

Scale: 3/32" = 1'-0"

N

PLAN NORTH

PLAN NOTES:

1. DENOTES NO LOAD ZONE (VEHICLE AND LIFTING LOADS NOT PERMITTED).
2. DENOTES TEMPORARY LOAD ZONE:
   A. VEHICLE LOADS PERMITTED
   B. WEIGHT LIFTING NOT PERMITTED
3. DENOTES ALLOWABLE LOCATION FOR 80 TON CRANE OUTRIGGER
4. THIS SHEET IS FOR INFORMATION ONLY AND IS BASED ON THE HALCROW ENGINEERING ANALYSIS REPORT DATED 2/17/12. CONTRACTOR SHALL REVIEW THE ACTUAL REPORT FOR FURTHER GUIDANCE ON LOAD LIMITATIONS.

SYM	DESCRIPTION	DATE	APPR

NAVFAC

SEAL

A/E INFO

APPROVED

FOR COMMANDER NAVFAC / B.L.T.L.

ACTIVITY

SATISFACTORY TO DATE

DES DAS DRW DAS CHK KW

PROJECT MANAGER H. KING

IPT TECH. BRANCH HEAD S. ZAVOYSKI

CHIEF ENG/ARCH (CORE) KW

DEPARTMENT OF THE NAVY
NAVAL FACILITIES ENGINEERING COMMAND
NAVAL FACILITIES ENGINEERING COMMAND SOUTHEAST
IPT SOUTH ATLANTIC NAVAL AIR STATION JACKSONVILLE

AUTEC SITE 1 ANDROS ISLAND, BAHAMAS

PIER 1902 REPAIRS

EXISTING LOADING PLAN – GRID 17–33

SCALE: SCALE

EPROJECT NO.: 1302903

CONSTR. CONTR. NO. N69450–XX–C–XXXX

NAVFAC DRAWING NO. 15079041

SHEET 16 OF 56

S003

DRAWFORM REVISION: 7 AUGUST 2009

SHEET FORMAT IS 22" X 34". IF PRINTED SHEET IS NOT 22" X 34", THEN IT IS NOT TO SCALE

FILE NAME: P:\CIBL\project_files\FLORIDA\nas key west fl\hjh00213\autec pier repairs-1302903\working technical files\Dwgs\Sheet Files\3 - STRU1902-S-003.dwg LAYOUT NAME: 1902-S-003 PLOTTED: Thursday, February 19, 2015 - 3:34pm USER: douglas.szilagyi

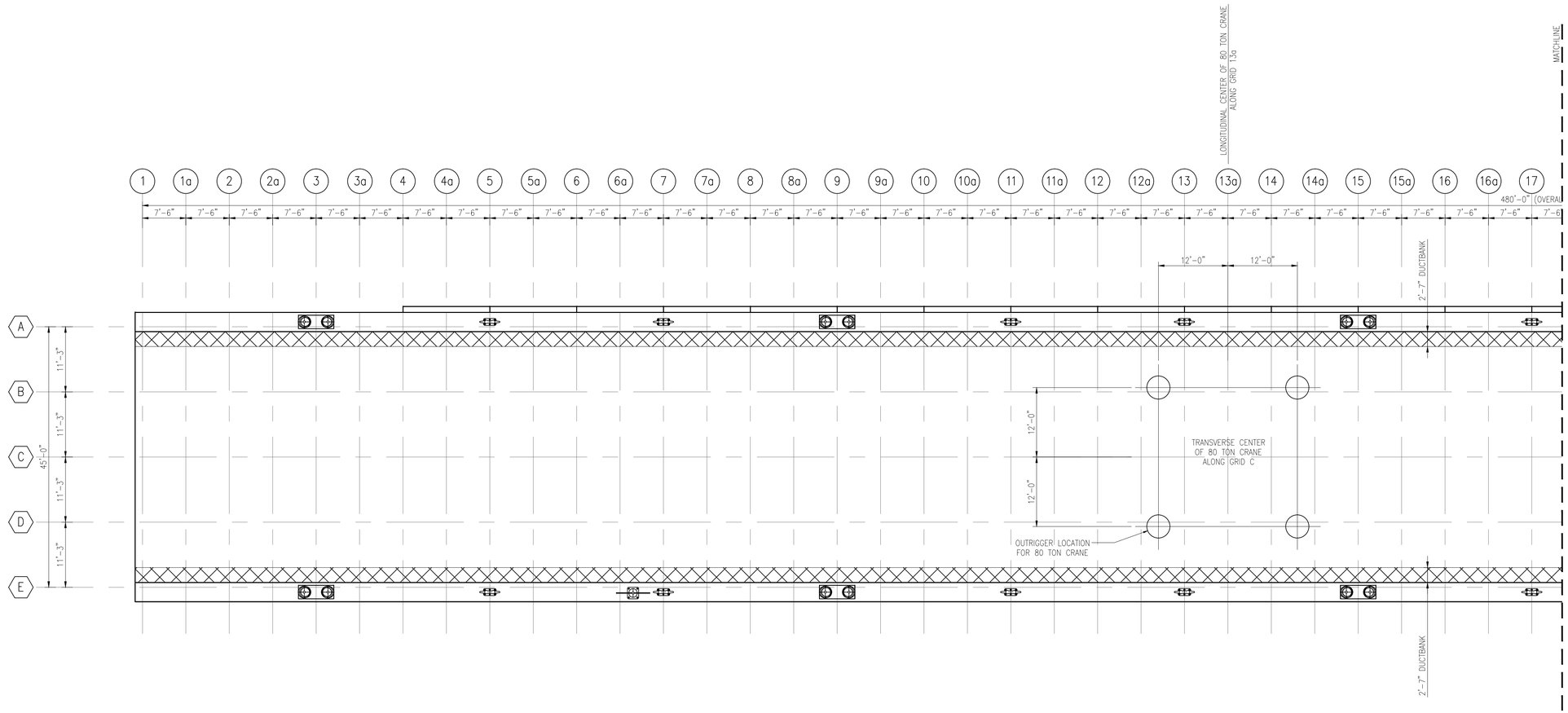

1 NEW LOADING PLAN – GRID 1–17

Scale: 3/32" = 1'-0"

N

PLAN NORTH

PLAN NOTES:

1. DENOTES NO LOAD ZONE (VEHICLE AND LIFTING LOADS NOT PERMITTED).
2. DENOTES ALLOWABLE LOCATION FOR 80 TON CRANE OUTRIGGER (±0'-6").
3. 28 TON CRANE IS PERMITTED ANYWHERE OUTSIDE THE NO LOAD ZONE.
4. NEW LOADING PLAN SHALL BE USED AFTER ALL REPAIRS IN THE CONTRACT DOCUMENTS HAVE BEEN COMPLETED.
5. THIS SHEET IS FOR INFORMATION ONLY AND IS BASED ON THE HALCROW ENGINEERING ANALYSIS REPORT DATED 2/17/12. CONTRACTOR SHALL REVIEW THE ACTUAL REPORT FOR FURTHER GUIDANCE ON LOAD LIMITATIONS.

SYM	DESCRIPTION	DATE	APPR

NAVFAC

SEAL

A/E INFO

APPROVED

FOR COMMANDER NAVFAC / B.L.T.L.

ACTIVITY

SATISFACTORY TO DATE

DES	DAS	DRW	DAS	CHK	KW

PROJECT MANAGER H. KING

IPT TECH. BRANCH HEAD S. ZAVOYSKI

CHIEF ENG/ARCH (CORE) KW

DEPARTMENT OF THE NAVY
NAVAL FACILITIES ENGINEERING COMMAND
NAVAL FACILITIES ENGINEERING COMMAND SOUTHEAST
IPT SOUTH ATLANTIC NAVAL AIR STATION JACKSONVILLE

AUTEC SITE 1 ANDROS ISLAND, BAHAMAS

PIER 1902 REPAIRS

NEW LOADING PLAN – GRID 1–17

SCALE: SCALE

EPROJECT NO.: 1302903

CONSTR. CONTR. NO. N69450–XX–C–XXXX

NAVFAC DRAWING NO. 15079042

SHEET 17 OF 56

S004

DRAWFORM REVISION: 7 AUGUST 2009

SHEET FORMAT IS 22" X 34". IF PRINTED SHEET IS NOT 22" X 34", THEN IT IS NOT TO SCALE

FILE NAME: P:\CIBL\project_files\FLORIDA\nas key west fl\h\h00213\autec pier repairs-1302903\working technical files\Dwgs\Sheet Files\3 - STRU1902-S-004.dwg LAYOUT NAME: 1902-S-004 PLOTTED: Thursday, February 19, 2015 - 3:35pm USER: douglas.szilagyi

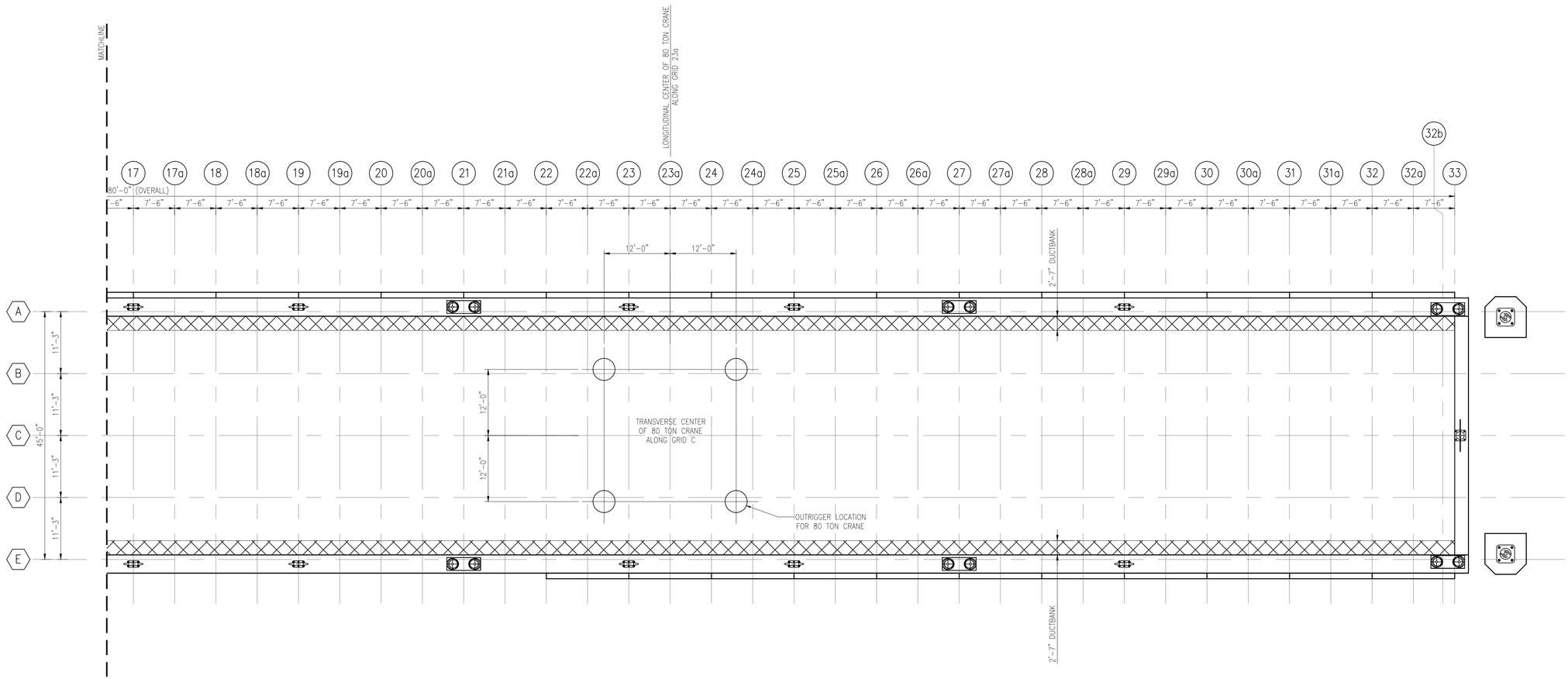

1 NEW LOADING PLAN – GRID 17–33

Scale: 3/32" = 1'-0"

N

PLAN NORTH

PLAN NOTES:

1. DENOTES NO LOAD ZONE (VEHICLE AND LIFTING LOADS NOT PERMITTED).
2. DENOTES ALLOWABLE LOCATION FOR 80 TON CRANE OUTRIGGER (± 0'-6").
3. 28 TON CRANE IS PERMITTED ANYWHERE OUTSIDE THE NO LOAD ZONE.
4. NEW LOADING PLAN SHALL BE USED AFTER ALL REPAIRS IN THE CONTRACT DOCUMENTS HAVE BEEN COMPLETED.
5. SHEET IS FOR INFORMATION ONLY AND IS BASED ON THE HALCROW ENGINEERING ANALYSIS REPORT DATED 2/17/12. CONTRACTOR SHALL REVIEW THE ACTUAL REPORT FOR FURTHER GUIDANCE ON LOAD LIMITATIONS.

NAVFAC

SEAL

A/E INFO

APPROVED

FOR COMMANDER NAVFAC / B.L.T.L.

ACTIVITY

SATISFACTORY TO DATE

DES	DAS	DRW	DAS	CHK	KW

PROJECT MANAGER H. KING

IPT TECH. BRANCH HEAD S. ZAVOYSKI

CHIEF ENG/ARCH (CORE) KW

DEPARTMENT OF THE NAVY
NAVAL FACILITIES ENGINEERING COMMAND
IPT SOUTH ATLANTIC
NAVAL FACILITIES ENGINEERING COMMAND SOUTHEAST
NAVAL AIR STATION JACKSONVILLE
AUTEC SITE 1
ANDROS ISLAND, BAHAMAS

PIER 1902 REPAIRS

NEW LOADING PLAN – GRID 17–33

SCALE: SCALE

EPROJECT NO.: 1302903

CONSTR. CONTR. NO. N69450–XX–C–XXXX

NAVFAC DRAWING NO. 15079043

SHEET 18 OF 56

S005

DRAWFORM REVISION: 7 AUGUST 2009

SHEET FORMAT IS 22" X 34". IF PRINTED SHEET IS NOT 22" X 34", THEN IT IS NOT TO SCALE

FILE NAME: P:\CBL\project_files\FLORIDA\nas key west fl\h\h00213\autec pier repairs-1302903\working technical files\Dwgs\Sheet Files\3 - STRU1902-S-005.dwg LAYOUT NAME: 1902-S-005 PLOTTED: Thursday, February 19, 2015 - 3:35pm USER: douglas.szilagyi

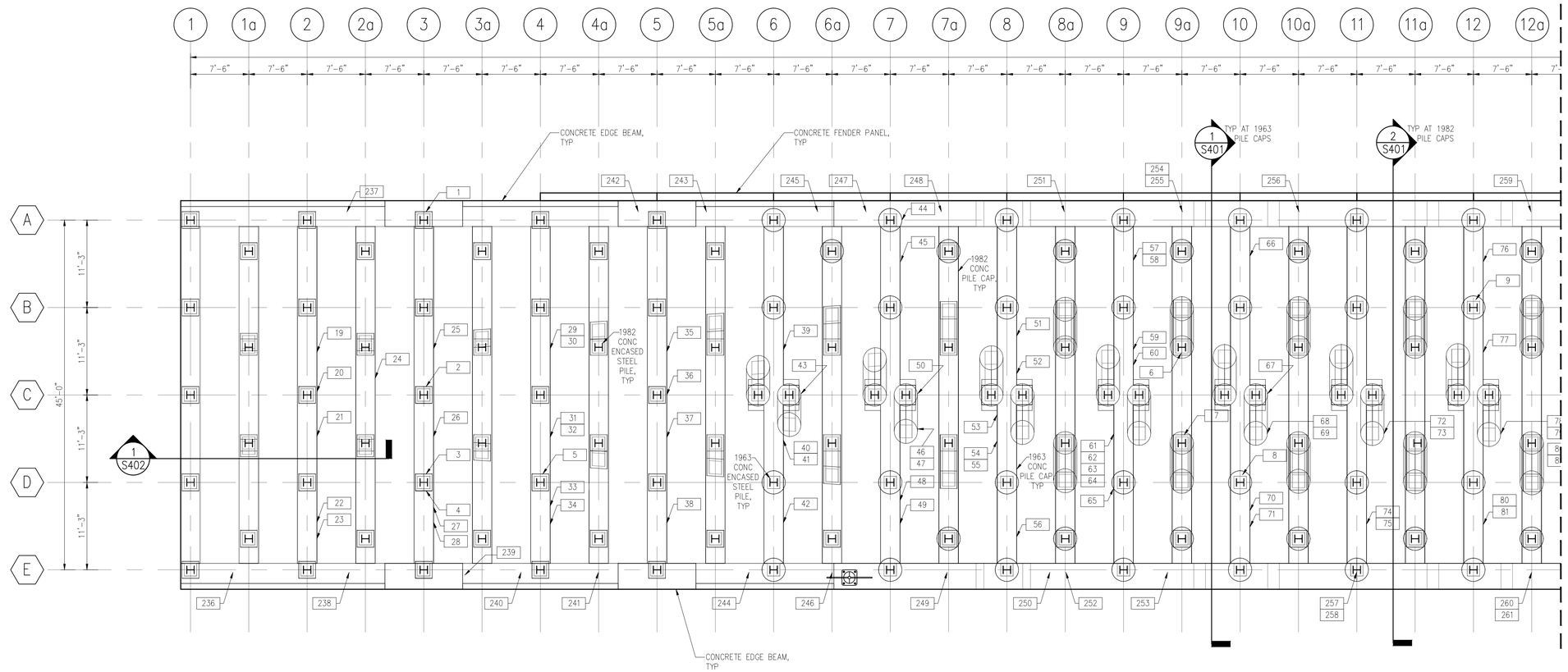

1 SUBSTRUCTURE DEFECT PLAN – GRID 1–12
Scale: 1/8" = 1'-0"

PLAN NOTES

PLAN NOTES:

1. REPAIR DEFECTS PER REPAIR SCHEDULE ON SHEETS S301–S308.
2. DEFECTS ARE BASED ON 2010 INSPECTION REPORT BY HALCROW, INC., SEE GENERAL NOTES ON SHEET S001.
3. UNDERWATER AND SURFACE INSPECTION OF ENTIRE PIER MUST BE PERFORMED PRIOR TO REPAIR CONSTRUCTION TO VERIFY TYPE, LOCATION, AND NUMBER OF DEFECTS, SEE GENERAL NOTES ON SHEET S001.
4. SEE S500 & S600 SHEET SERIES FOR REPAIR DETAILS.
5. COLUMN GIRDS WITH "a" SUFFIX LOCATE THE 1982 PILE AND PILE CAPS, ALL OTHER GRIDS LOCATE ORIGINAL 1963 CONSTRUCTION.

LEGEND

SYMBOLS

- PILE COLUMN
- PILE ROW
- DEFECT CALLOUT, SEE REPAIR SCHEDULE ON SHEETS S301–S308
- STEEL H–PILE W/ 26"x26" CONCRETE ENCASEMENT
- STEEL H–PILE W/ 36"ø CONCRETE ENCASEMENT
- BATTERED STEEL H–PILE W/ 26"x26" CONCRETE ENCASEMENT
- BATTERED STEEL H–PILE W/ 36"ø CONCRETE ENCASEMENT

KEYPLAN

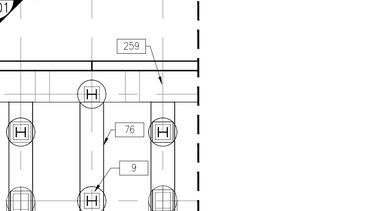

GRAPHIC SCALE

1/8"=1'-0" 0' 5' 10' 20' 30'

SYM	DESCRIPTION	DATE	APPR
---	---	---	---

SEAL

A/E INFO

APPROVED

FOR COMMANDER NAVFAC / B.L.T.L.

ACTIVITY

SATISFACTORY TO ENG:

DES DAS DRW DAS CHK KW

PROJECT MANAGER H. KING

IPT TECH. BRANCH HEAD S. ZAVOYSKI

CHIEF ENG/ARCH (CORE) KW

DEPARTMENT OF THE NAVY
NAVAL FACILITIES ENGINEERING COMMAND
IPT SOUTH ATLANTIC
AUTEC SITE 1

NAVAL FACILITIES ENGINEERING COMMAND
NAVFAC SOUTHEAST
NAVAL AIR STATION, JACKSONVILLE

ANDROS ISLAND, BAHAMAS

PIER 1902 REPAIRS

SUBSTRUCTURE DEFECT PLAN – GRID 1–12

SCALE: SCALE

EPROJECT NO.: 1302903

CONSTR. CONTR. NO. N69450–XX–C–XXXX

NAVFAC DRAWING NO. 15079044

SHEET 19 OF 56

S101

DRAWFORM REVISION: 7 AUGUST 2009

SHEET FORMAT IS 22" X 34". IF PRINTED SHEET IS NOT 22" X 34", THEN IT IS NOT TO SCALE

FILE NAME: P:\CBL\project_files\FLORIDA\nas key west f(l)h\h00213\autec pier repairs-1302903\working technical files\dwgs\Sheet Files\3 - STRU1902-S-101.dwg LAYOUT NAME: 1902-S-101 PLOTTED: Thursday, February 19, 2015 - 3:35pm USER: douglas.szilagyi

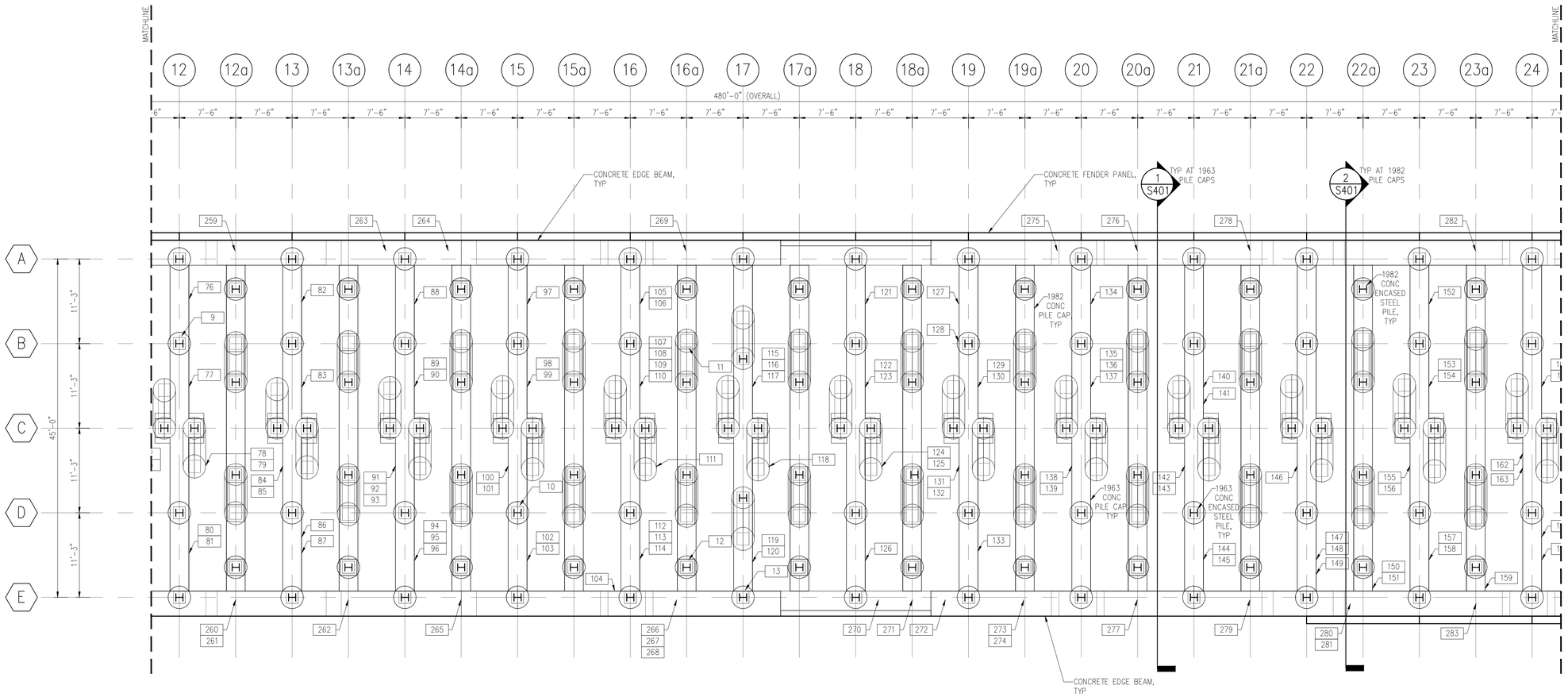

1 SUBSTRUCTURE DEFECT PLAN – GRID 12–24
Scale: 1/8" = 1'-0"

PLAN NOTES

PLAN NOTES:

1. REPAIR DEFECTS PER REPAIR SCHEDULE ON SHEETS S301–S308.
2. DEFECTS ARE BASED ON 2010 INSPECTION REPORT BY HALCROW, INC., SEE GENERAL NOTES ON SHEET S001.
3. SEE SHEET S101 FOR ADDITIONAL PLAN NOTES.

LEGEND

SYMBOLS

- 1 PILE COLUMN
- A PILE ROW
- # DEFECT CALLOUT, SEE REPAIR SCHEDULE ON SHEETS S301–S308
- H STEEL H-PILE W/ 26"x26" CONCRETE ENCASEMENT
- H STEEL H-PILE W/ 36"ø CONCRETE ENCASEMENT
- H BATTERED STEEL H-PILE W/ 26"x26" CONCRETE ENCASEMENT
- H BATTERED STEEL H-PILE W/ 36"ø CONCRETE ENCASEMENT

KEYPLAN

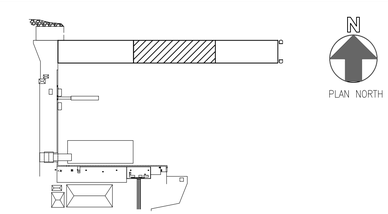

GRAPHIC SCALE

1/8"=1'-0" 0' 5' 10' 20' 30'

SYM	DESCRIPTION	DATE	APPR

NAVFAC

SEAL

A/E INFO

APPROVED

FOR COMMANDER NAVFAC / B.L.T.L.

ACTIVITY

SATISFACTORY TO DATE

DES	DAS	DRW	DAS	CHK	KW
PROJECT MANAGER	H. KING				
IPT TECH. BRANCH HEAD	S. ZAVOYSKI				
CHIEF ENG/ARCH (CORE)	KW				

DEPARTMENT OF THE NAVY
NAVAL FACILITIES ENGINEERING COMMAND
IPT SOUTH ATLANTIC

NAVAL FACILITIES ENGINEERING COMMAND SOUTHEAST
NAVAL AIR STATION JACKSONVILLE

AUTEC SITE 1

ANDROS ISLAND, BAHAMAS

PIER 1902 REPAIRS

SUBSTRUCTURE DEFECT PLAN – GRID 12–24

SCALE:	SCALE
EPROJECT NO.:	1302903
CONSTR. CONTR. NO.	N69450–XX–C–XXXX
NAVFAC DRAWING NO.	15079045
SHEET	20 OF 56

S102

DRAWFORM REVISION: 7 AUGUST 2009

FILE NAME: P:\CIBL\project_files\FLORIDA\nas key west fl\jh\n00213\autec pier repairs~1302903\working technical files\Dwgs\Sheet Files\3 – STRU1902-S-102.dwg LAYOUT NAME: 1902-S-102 PLOTTED: Thursday, February 19, 2015 – 3:35pm USER: douglas.szilagyi

SHEET FORMAT IS 22" X 34". IF PRINTED SHEET IS NOT 22" X 34", THEN IT IS NOT TO SCALE

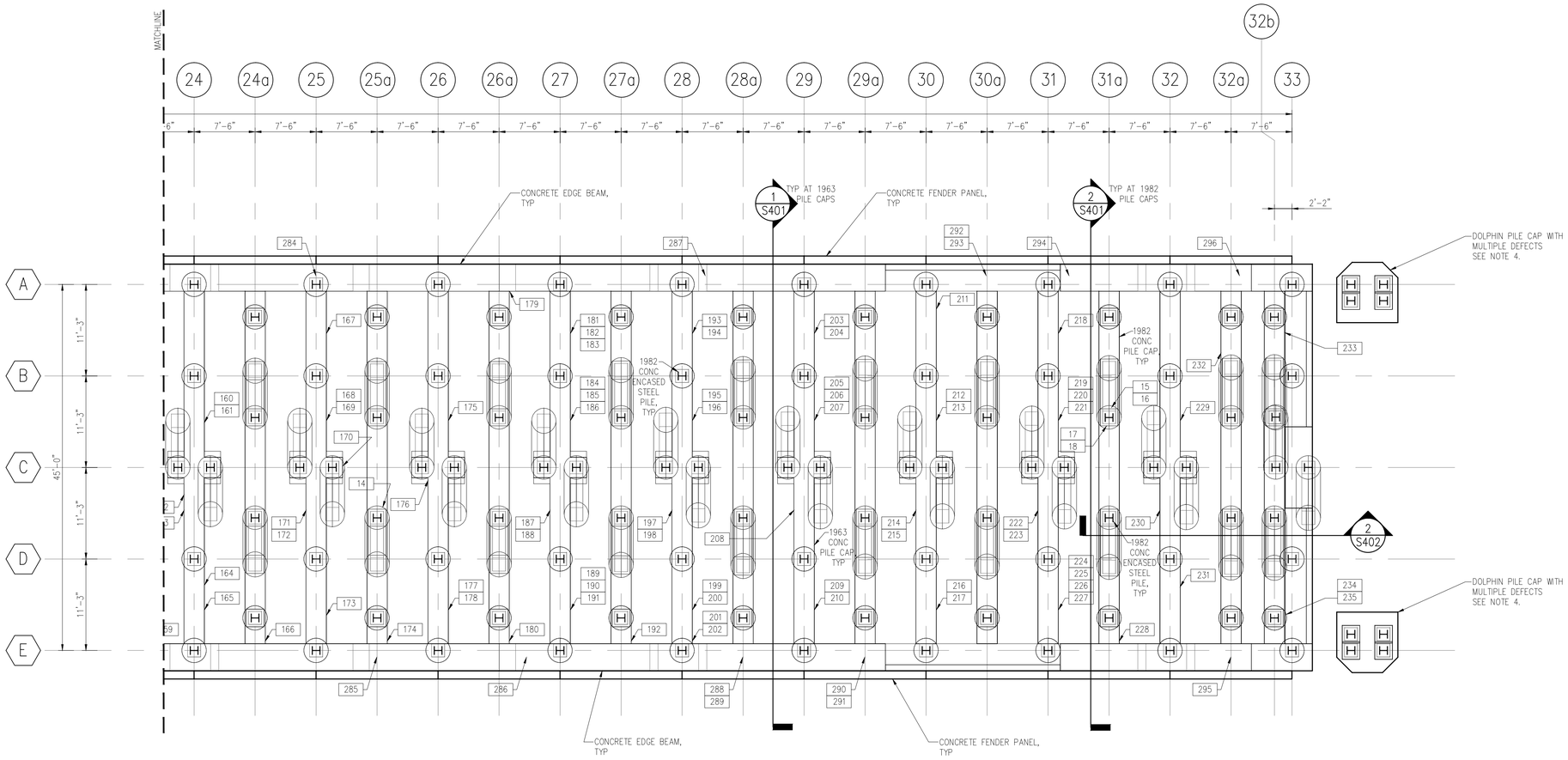

1 SUBSTRUCTURE DEFECT PLAN – GRID 24–33
Scale: 1/8" = 1'-0"

PLAN NOTES

PLAN NOTES:

1. REPAIR DEFECTS PER REPAIR SCHEDULE ON SHEETS S301–S308.
2. DEFECTS ARE BASED ON 2010 INSPECTION REPORT BY HALCROW, INC., SEE GENERAL NOTES ON SHEET S001.
3. SEE SHEET S101 FOR ADDITIONAL PLAN NOTES.
4. DOLPHIN PILE CAP WITH MULTIPLE DEFECTS THROUGHOUT ENTIRE CAP INCLUDING CRACKED CONCRETE, SPALLED CONCRETE, AND EXPOSED REBAR. DOLPHIN DEFECTS WERE NOT QUANTIFIED IN THE 2010 INSPECTION REPORT BY HALCROW, INC NOR WERE REPAIR RECOMMENDATIONS FOR DOLPHINS PROVIDED. SEE DETAILS ON SHEET S506 FOR DOLPHIN REPAIRS.

LEGEND

SYMBOLS

- 1 PILE COLUMN
- A PILE ROW
- # DEFECT CALLOUT, SEE REPAIR SCHEDULE ON SHEETS S301–S308
- H STEEL H-PILE W/ 26"x26" CONCRETE ENCASEMENT
- H STEEL H-PILE W/ 36"ø CONCRETE ENCASEMENT
- H BATTERED STEEL H-PILE W/ 26"x26" CONCRETE ENCASEMENT
- H BATTERED STEEL H-PILE W/ 36"ø CONCRETE ENCASEMENT

KEYPLAN

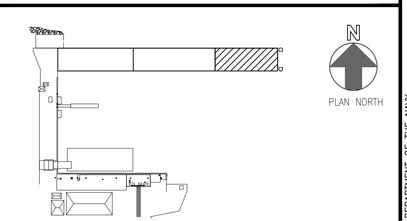

GRAPHIC SCALE

1/8"=1'-0" 0' 5' 10' 20' 30'

SYM	DESCRIPTION	DATE	APPR

NAVFAC

SEAL

A/E INFO

APPROVED

FOR COMMANDER NAVFAC / B.L.T.L.

ACTIVITY

SATISFACTORY TO DATE

DES DAS	DRW DAS	CHK KW	
PROJECT MANAGER	H. KING		
IPT TECH. BRANCH HEAD	S. ZAVOYSKI		
CHIEF ENG/ARCH (CORE)	KW		

DEPARTMENT OF THE NAVY
NAVAL FACILITIES ENGINEERING COMMAND
IPT SOUTH ATLANTIC
NAVAL FACILITIES ENGINEERING COMMAND SOUTHEAST
NAVAL AIR STATION JACKSONVILLE
AUTEC SITE 1
ANDROS ISLAND, BAHAMAS

PIER 1902 REPAIRS

SUBSTRUCTURE DEFECT PLAN – GRID 24–33

SCALE:	SCALE
EPROJECT NO.:	1302903
CONSTR. CONTR. NO.	N69450–XX–C–XXXX
NAVFAC DRAWING NO.	15079046
SHEET	21 OF 56

S103

DRAWFORM REVISION: 7 AUGUST 2009

SHEET FORMAT IS 22" X 34". IF PRINTED SHEET IS NOT 22" X 34", THEN IT IS NOT TO SCALE

FILE NAME: P:\CIBL\project_files\FLORIDA\nas key west fl\hjn00213\autec pier repairs~1302903\working technical files\Dwgs\Sheet Files\3 – STRU1902-S-103.dwg LAYOUT NAME: 1902-S-103 PLOTTED: Thursday, February 19, 2015 – 3:35pm USER: douglas.szilagyi

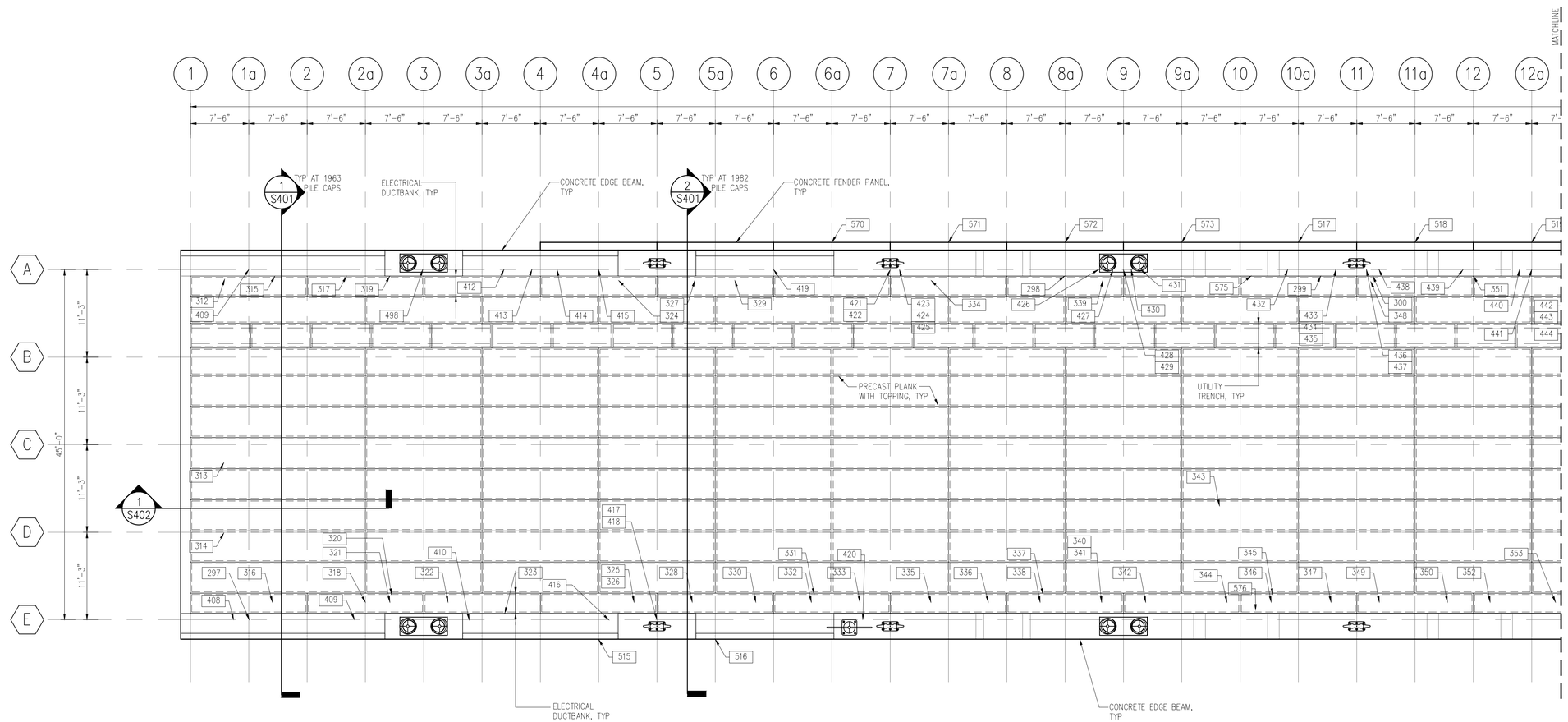

1 SUPERSTRUCTURE DEFECT PLAN – GRID 1–12
Scale: 1/8" = 1'-0"

PLAN NOTES

PLAN NOTES:

1. REPAIR DEFECTS PER REPAIR SCHEDULE ON SHEETS S301–S308.
2. DEFECTS ARE BASED ON 2010 INSPECTION REPORT BY HALCROW, INC., SEE GENERAL NOTES ON SHEET S001.
3. SEE SHEET S101 FOR ADDITIONAL PLAN NOTES.

LEGEND

SYMBOLS

- 1 PILE COLUMN
- A PILE ROW
- # DEFECT CALLOUT, SEE REPAIR SCHEDULE ON SHEETS S301–S308
- MOORING BOLLARD
- MOORING CLEAT
- DOUBLE BIT
- FLAGPOLE

KEYPLAN

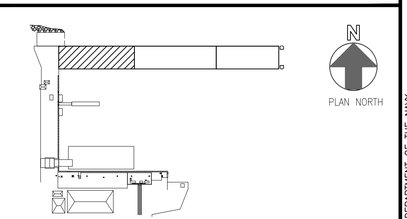

GRAPHIC SCALE

1/8"=1'-0" 0' 5' 10' 20' 30'

SYM	DESCRIPTION	DATE	APPR

NAVFAC

SEAL

A/E INFO

APPROVED

FOR COMMANDER NAVFAC / B.L.T.L.

ACTIVITY

SATISFACTORY TO SITE

DES	DRW	CHK
DAS	DAS	KW

PROJECT MANAGER H. KING

IPT TECH. BRANCH HEAD S. ZAVOYSKI

CHIEF ENG/ARCH (CORE) KW

DEPARTMENT OF THE NAVY
NAVAL FACILITIES ENGINEERING COMMAND
IPT SOUTH ATLANTIC
NAVAL FACILITIES ENGINEERING COMMAND SOUTHEAST
NAVAL AIR STATION JACKSONVILLE
AUTEC SITE 1
ANDROS ISLAND, BAHAMAS

PIER 1902 REPAIRS

SUPERSTRUCTURE DEFECT PLAN – GRID 1–12

SCALE: SCALE

EPROJECT NO.: 1302903

CONSTR. CONTR. NO. N69450–XX–C–XXXX

NAVFAC DRAWING NO. 15079047

SHEET 22 OF 56

S104

DRAWFORM REVISION: 7 AUGUST 2009

FILE NAME: P:\CIB\project_files\FLORIDA\nas key west fl\hjn00213\autec pier repairs-1302903\working technical files\Dwgs\Sheet Files\3 - STRU1902-S-104.dwg LAYOUT NAME: 1902-S-104 PLOTTED: Thursday, February 19, 2015 - 3:36pm USER: douglas.szilagyi

SHEET FORMAT IS 22" X 34". IF PRINTED SHEET IS NOT 22" X 34", THEN IT IS NOT TO SCALE

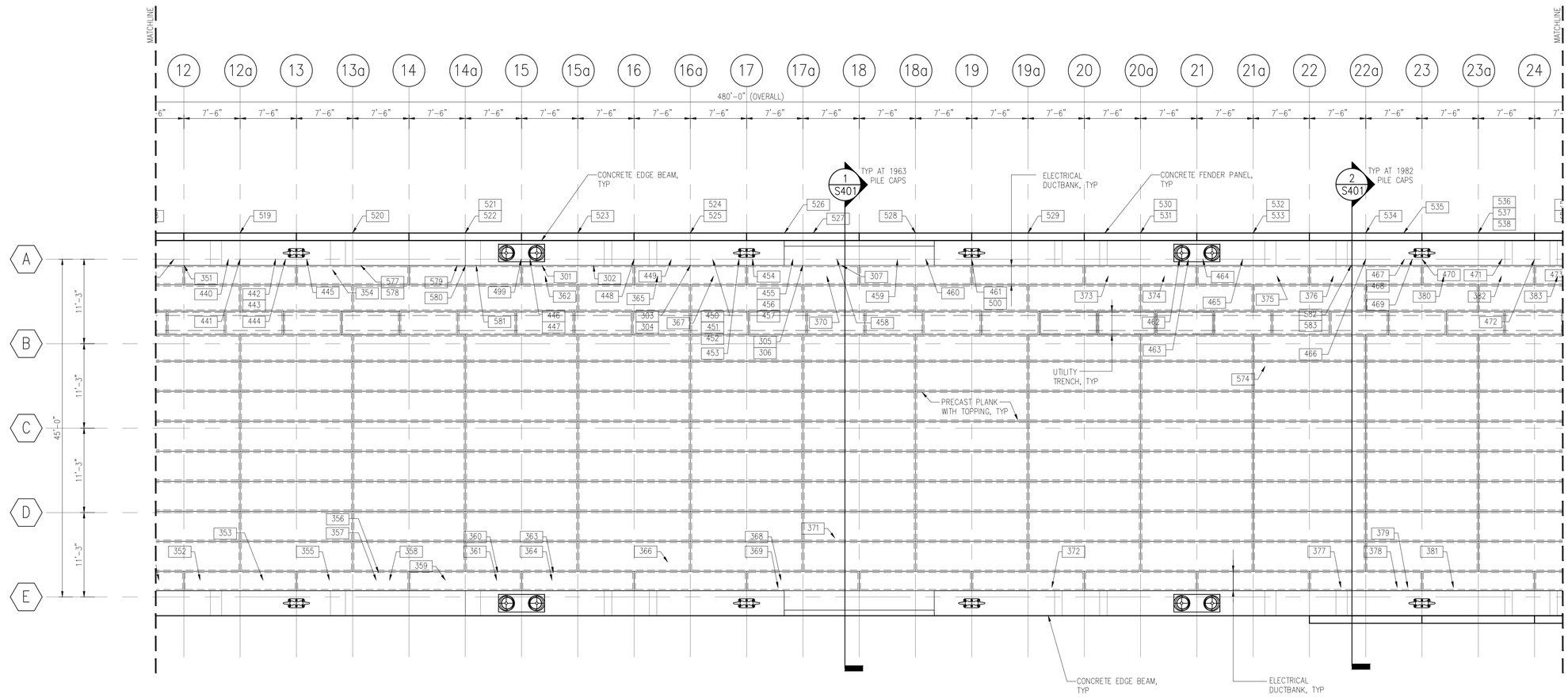

1 SUPERSTRUCTURE DEFECT PLAN – GRID 12–24
Scale: 1/8" = 1'-0"

PLAN NOTES

PLAN NOTES:

1. REPAIR DEFECTS PER REPAIR SCHEDULE ON SHEETS S301–S308.
2. DEFECTS ARE BASED ON 2010 INSPECTION REPORT BY HALCROW, INC., SEE GENERAL NOTES ON SHEET S001.
3. SEE SHEET S101 FOR ADDITIONAL PLAN NOTES.

LEGEND

SYMBOLS

- PILE COLUMN
- PILE ROW
- DEFECT CALLOUT, SEE REPAIR SCHEDULE ON SHEETS S301–S308
- MOORING BOLLARD
- MOORING CLEAT
- DOUBLE BIT
- FLAGPOLE

KEYPLAN

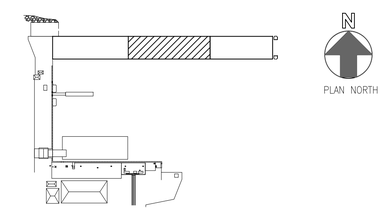

GRAPHIC SCALE

1/8"=1'-0" 0' 5' 10' 20' 30'

SYM	DESCRIPTION	DATE	APPR

NAVFAC

SEAL

A/E INFO

APPROVED

FOR COMMANDER NAVFAC / B.L.T.L.

ACTIVITY

SATISFACTORY TO DATE

DES	DAS	DRW	DAS	CHK	KW

PROJECT MANAGER H. KING

IPT TECH. BRANCH HEAD S. ZAVOYSKI

CHIEF ENG/ARCH (CORE) KW

DEPARTMENT OF THE NAVY
NAVAL FACILITIES ENGINEERING COMMAND
NAVAL FACILITIES ENGINEERING COMMAND SOUTHEAST
NAVAL AIR STATION JACKSONVILLE
IPT SOUTH ATLANTIC
AUTEC SITE 1
ANDROS ISLAND, BAHAMAS

PIER 1902 REPAIRS

SUPERSTRUCTURE DEFECT PLAN – GRID 12–24

SCALE: SCALE

EPROJECT NO.: 1302903

CONSTR. CONTR. NO. N69450–XX–C–XXXX

NAVFAC DRAWING NO. 15079048

SHEET 23 OF 56

S105

DRAWFORM REVISION: 7 AUGUST 2009

FILE NAME: P:\CBL\project_files\FLORIDA\nas key west fl\hjn00213\autec pier repairs-1302903\working technical files\Dwgs\Sheet Files\3 - STRU1902-S-105.dwg LAYOUT NAME: 1902-S-105 PLOTTED: Thursday, February 19, 2015 - 3:36pm USER: douglas.szilagyi

SHEET FORMAT IS 22" X 34". IF PRINTED SHEET IS NOT 22" X 34", THEN IT IS NOT TO SCALE

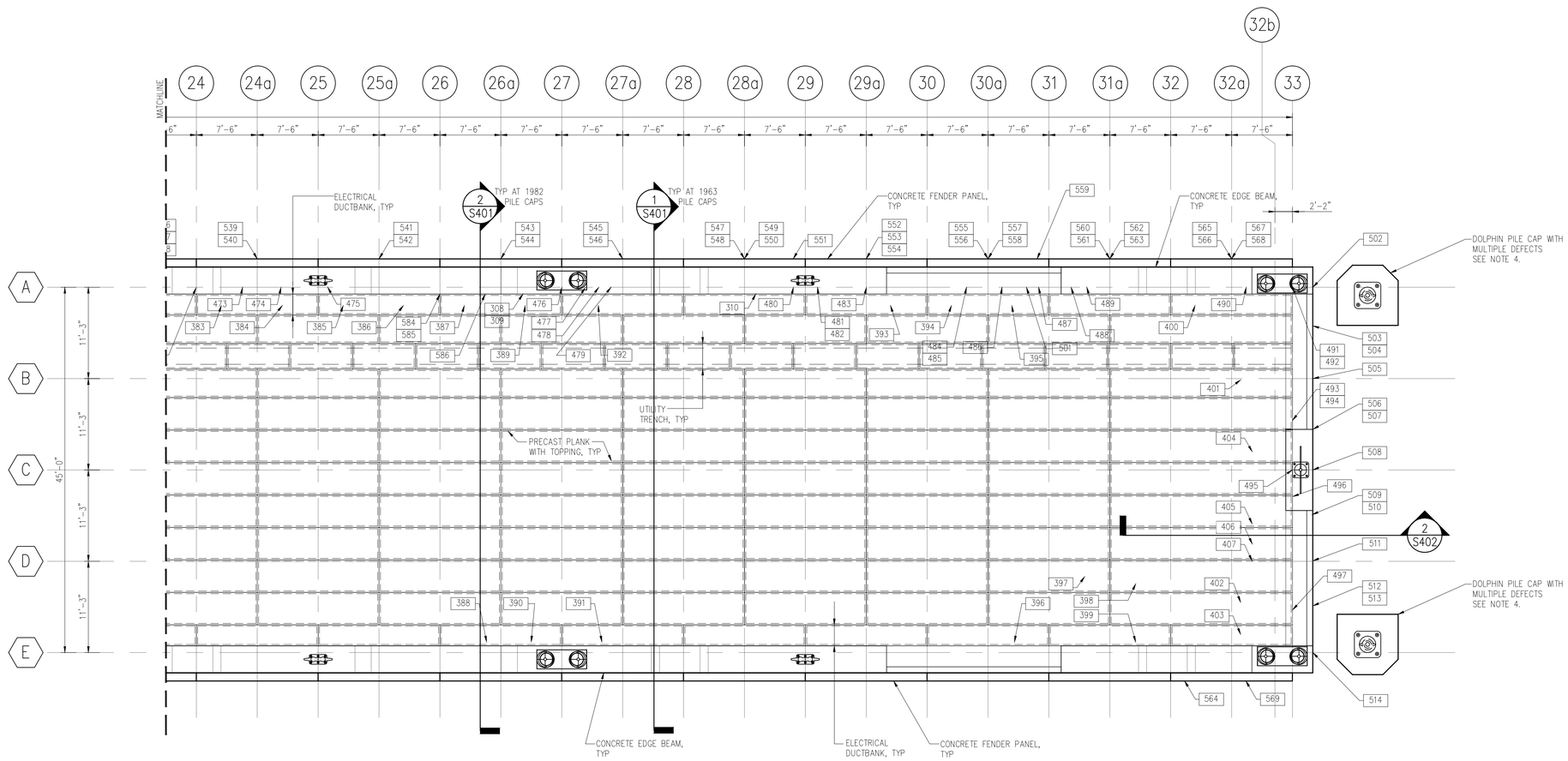

1 SUPERSTRUCTURE DEFECT PLAN – GRID 24–33
Scale: 1/8" = 1'-0"

PLAN NOTES

PLAN NOTES:

1. REPAIR DEFECTS PER REPAIR SCHEDULE ON SHEETS S301–S308.
2. DEFECTS ARE BASED ON 2010 INSPECTION REPORT BY HALCROW, INC., SEE GENERAL NOTES ON SHEET S001.
3. SEE SHEET S101 FOR ADDITIONAL PLAN NOTES.
4. DOLPHIN PILE CAP WITH MULTIPLE DEFECTS THROUGHOUT ENTIRE CAP INCLUDING CRACKED CONCRETE, SPALLED CONCRETE, AND EXPOSED REBAR. DOLPHIN DEFECTS WERE NOT QUANTIFIED IN THE 2010 INSPECTION REPORT BY HALCROW, INC NOR WERE REPAIR RECOMMENDATIONS FOR DOLPHINS PROVIDED. SEE DETAILS ON SHEET S506 FOR DOLPHIN REPAIRS.

LEGEND

SYMBOLS

- 1 PILE COLUMN
- A PILE ROW
- # DEFECT CALLOUT, SEE REPAIR SCHEDULE ON SHEETS S301–S308
- MOORING BOLLARD
- MOORING CLEAT
- DOUBLE BIT
- FLAGPOLE

KEYPLAN

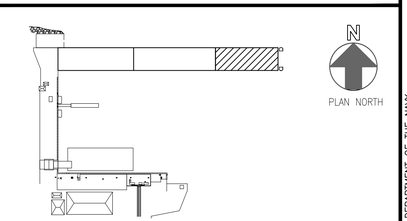

GRAPHIC SCALE

1/8"=1'-0" 0' 5' 10' 20' 30'

SYM	DESCRIPTION	DATE	APPR

NAVFAC

SEAL

A/E INFO

APPROVED

FOR COMMANDER NAVFAC / B.L.T.L.

ACTIVITY

SATISFACTORY TO CITE

DES DAS	DRW DAS	CHK KW	
PROJECT MANAGER	H. KING		
IPT TECH. BRANCH HEAD	S. ZAVOYSKI		
CHIEF ENG/ARCH (CORE)	KW		

DEPARTMENT OF THE NAVY
NAVAL FACILITIES ENGINEERING COMMAND
IPT SOUTH ATLANTIC
NAVAL FACILITIES ENGINEERING COMMAND SOUTHEAST
NAVAL AIR STATION JACKSONVILLE
AUTEC SITE 1
ANDROS ISLAND, BAHAMAS

PIER 1902 REPAIRS

SUPERSTRUCTURE DEFECT PLAN – GRID 24–33

SCALE:	SCALE
EPROJECT NO.:	1302903
CONSTR. CONTR. NO.	N69450–XX–C–XXXX
NAVFAC DRAWING NO.	15079049
SHEET	24 OF 56

S106

DRAWFORM REVISION: 7 AUGUST 2009

SHEET FORMAT IS 22" X 34". IF PRINTED SHEET IS NOT 22" X 34", THEN IT IS NOT TO SCALE

FILE NAME: P:\CIBL\project_files\FLORIDA\nas key west fl\hjn00213\autec pier repairs~1302903\working technical files\Dwgs\Sheet Files\3 – STRU1902-S-106.dwg LAYOUT NAME: 1902-S-106 PLOTTED: Thursday, February 19, 2015 – 3:36pm USER: douglas.szilagyi

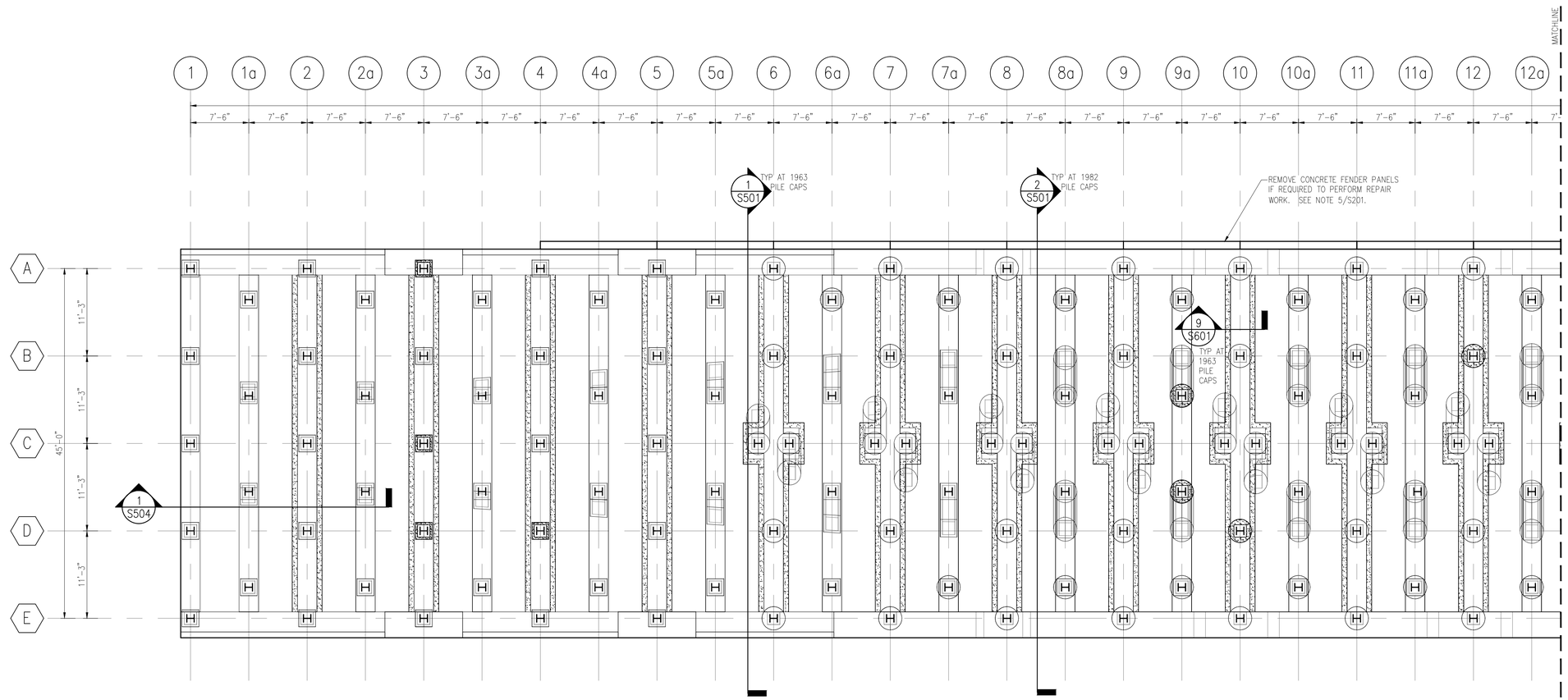

1 SUBSTRUCTURE REPAIR PLAN – GRID 1–12
Scale: 1/8" = 1'-0"

PLAN NOTES

PLAN NOTES:

1. PROVIDE CONCRETE ENCASEMENT OF ALL 1963 PILE CAPS PER LOCATIONS ON PLAN AND DETAIL 9/S601.
2. UNDERWATER AND SURFACE INSPECTION OF ENTIRE PIER MUST BE PERFORMED PRIOR TO REPAIR CONSTRUCTION, SEE GENERAL NOTES OF SHEET S001.
3. SEE REPAIR SCHEDULE ON SHEETS S301–S308 FOR ALL REPAIRS. ALL SCHEDULED REPAIRS TO THE 1963 PILE CAPS MUST BE MADE PRIOR TO PILE CAP ENCASEMENT.
4. PIER DECK SHALL BE CLEAR OF ALL MAJOR EQUIPMENT AND SUPPLIES DURING PILE CAP AND EDGE BEAM REPAIR CONSTRUCTION FOR AT LEAST ONE BAY IN EACH DIRECTION OF THE MEMBER BEING REPAIRED. CONTRACTOR'S DELEGATED SHORING ENGINEER MUST DETERMINE SPECIFIC USE LIMITATIONS DURING CONSTRUCTION BASED ON SHORING DESIGN AND CONTRACTOR'S MEANS AND METHODS.
5. EXISTING CONCRETE FENDER PANELS MAY BE REMOVED FOR CONSTRUCTION ACCESSIBILITY, SEE GENERAL NOTES ON SHEET S001 FOR REMOVAL AND STORAGE SPECIFICATIONS.
6. SEE DETAIL 5/S504 FOR PANEL RE–INSTALLATION. A RUBBER FENDER SYSTEM PER DETAIL 6/S504 MAY BE USED IN LIEU OF RE–INSTALLING EXISTING PANELS IF THERE IS NO ADDITIONAL COST TO PROJECT. FINAL FENDER SYSTEM MUST BE A COMPLETE SYSTEM USING ONE TYPE OF FENDER, CONCRETE OR RUBBER, AND NOT A COMBINATION BOTH. NEW FENDER SYSTEM ALONG GRID 33 MUST BE RUBBER PER DETAIL 7/S504.
7. COLUMN GIRDS WITH "a" SUFFIX LOCATE THE 1982 PILE AND PILE CAPS, ALL OTHER GRIDS LOCATE ORIGINAL 1963 CONSTRUCTION.

LEGEND

SYMBOLS

- 1 PILE COLUMN
- A PILE ROW
- C.I.P. CONCRETE PILE CAP ENCASEMENT (SEE PLAN NOTE 1)
- STEEL H–PILE W/ 26"x26" CONCRETE ENCASEMENT
- BATTERED STEEL H–PILE W/ 26"x26" CONCRETE ENCASEMENT
- SQUARE CONCRETE PILE ENCASEMENT REPAIR, SEE REPAIR SCHEDULE ON SHEET S301–S308
- ROUND CONCRETE PILE ENCASEMENT REPAIR, SEE REPAIR SCHEDULE ON SHEET S301–S308
- STEEL H–PILE W/ 36"ø CONCRETE ENCASEMENT
- BATTERED STEEL H–PILE W/ 36"ø CONCRETE ENCASEMENT

KEYPLAN

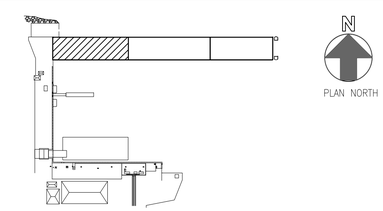

GRAPHIC SCALE

1/8"=1'-0" 0' 5' 10' 20' 30'

SYM	DESCRIPTION	DATE	APPR

NAVFAC

SEAL

A/E INFO

APPROVED

FOR COMMANDER NAVFAC / B.L.T.L.

ACTIVITY

SATISFACTORY TO DATE

DES	DAS	DRW	DAS	CHK	KW
PROJECT MANAGER	H. KING				
IPT TECH. BRANCH HEAD	S. ZAVOYSKI				
CHIEF ENG/ARCH (CORE)	KW				

DEPARTMENT OF THE NAVY
NAVAL FACILITIES ENGINEERING COMMAND
NAVAL FACILITIES ENGINEERING COMMAND SOUTHEAST
IPT SOUTH ATLANTIC
NAVAL AIR STATION JACKSONVILLE
AUTEC SITE 1
ANDROS ISLAND, BAHAMAS

PIER 1902 REPAIRS

SUBSTRUCTURE REPAIR PLAN – GRID 1–12

SCALE:	SCALE
EPROJECT NO.:	1302903
CONSTR. CONTR. NO.	N69450–XX–C–XXXX
NAVFAC DRAWING NO.	15079050
SHEET	25 OF 56

S201

DRAWFORM REVISION: 7 AUGUST 2009

FILE NAME: P:\OBL\project_files\FLORIDA\nas key west fl\hjn00213\autec pier repairs-1302903\working technical files\Dwgs\Sheet Files\3 – STRU1902-S-201.dwg LAYOUT NAME: 1902-S-201 PLOTTED: Thursday, February 19, 2015 – 3:36pm USER: douglas.szilagyi

SHEET FORMAT IS 22" X 34". IF PRINTED SHEET IS NOT 22" X 34", THEN IT IS NOT TO SCALE

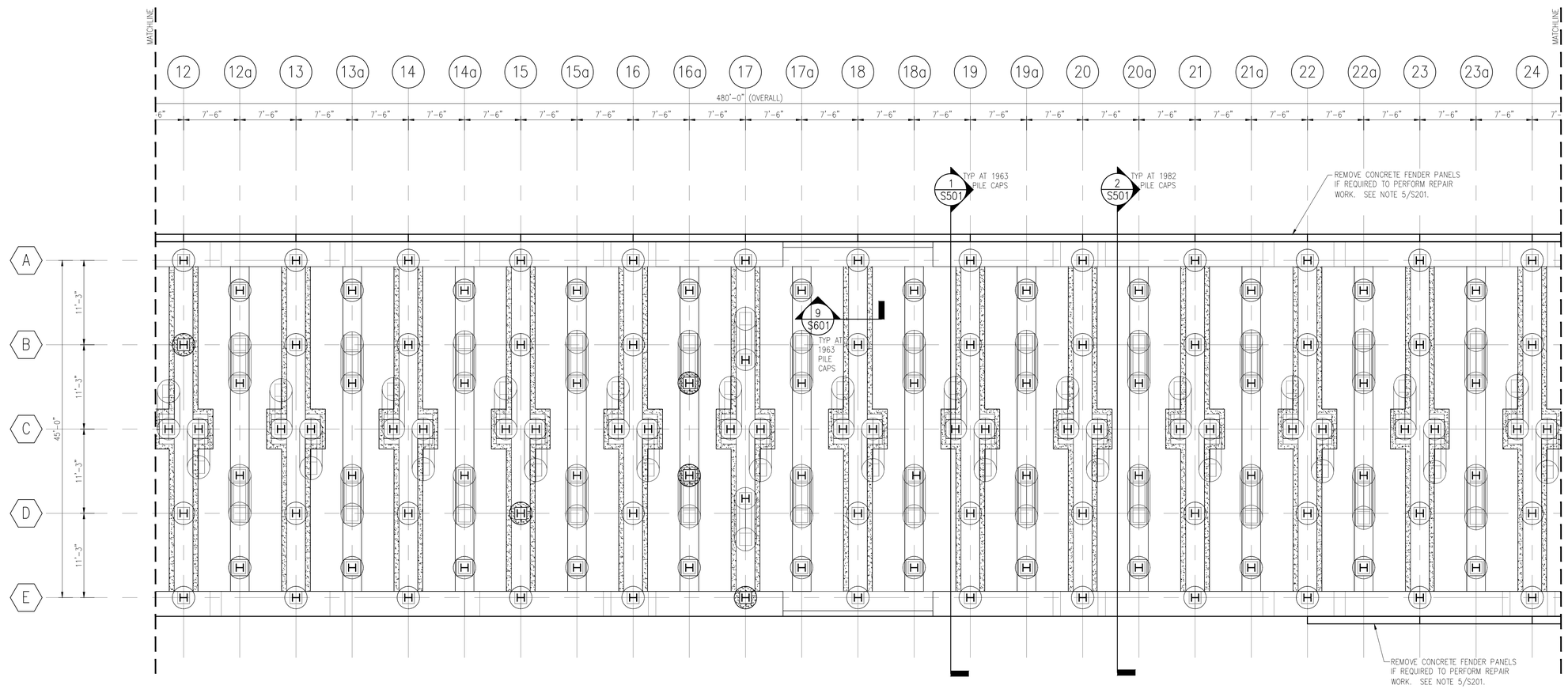

1 SUBSTRUCTURE REPAIR PLAN – GRID 12–24
Scale: 1/8" = 1'-0"

PLAN NOTES

PLAN NOTES:

1. PROVIDE CONCRETE ENCASEMENT OF 1963 PILE CAPS PER LOCATIONS ON PLAN AND DETAIL 9/S601.
2. SEE SHEET S201 FOR ADDITIONAL PLAN NOTES.

LEGEND

SYMBOLS

- 1 PILE COLUMN
- A PILE ROW
- C.I.P. CONCRETE PILE CAP ENCASEMENT (SEE PLAN NOTE 1)
- STEEL H-PILE W/ 26"x26" CONCRETE ENCASEMENT
- BATTERED STEEL H-PILE W/ 26"x26" CONCRETE ENCASEMENT
- SQUARE CONCRETE PILE ENCASEMENT REPAIR, SEE REPAIR SCHEDULE ON SHEET S301–S308
- ROUND CONCRETE PILE ENCASEMENT REPAIR, SEE REPAIR SCHEDULE ON SHEET S301–S308
- STEEL H-PILE W/ 36"ø CONCRETE ENCASEMENT
- BATTERED STEEL H-PILE W/ 36"ø CONCRETE ENCASEMENT

KEYPLAN

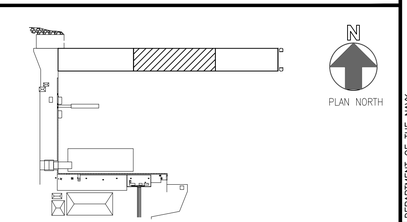

GRAPHIC SCALE

1/8"=1'-0" 0' 5' 10' 20' 30'

SYM	DESCRIPTION	DATE	APPR

NAVFAC

SEAL

A/E INFO

APPROVED

FOR COMMANDER NAVFAC / B.L.T.L.

ACTIVITY

SATISFACTORY TO CITE

DES DAS	DRW DAS	CHK KW	
PROJECT MANAGER	H. KING		
IPT TECH. BRANCH HEAD	S. ZAVOYSKI		
CHIEF ENG/ARCH (CORE)	KW		

DEPARTMENT OF THE NAVY
NAVAL FACILITIES ENGINEERING COMMAND
NAVAL FACILITIES ENGINEERING COMMAND SOUTHEAST
NAVAL AIR STATION JACKSONVILLE
IPT SOUTH ATLANTIC
AUTEC SITE 1
ANDROS ISLAND, BAHAMAS

PIER 1902 REPAIRS

SUBSTRUCTURE REPAIR PLAN – GRID 12–24

SCALE:	SCALE
EPROJECT NO.:	1302903
CONSTR. CONTR. NO.	N69450–XX–C–XXXX
NAVFAC DRAWING NO.	15079051
SHEET	26 OF 56

S202

DRAWFORM REVISION: 7 AUGUST 2009

FILE NAME: P:\CIBL\project_files\FLORIDA\nas key west fl\hjn00213\autec pier repairs~1302903\working technical files\Dwgs\Sheet Files\3 – STRU1902-S-202.dwg LAYOUT NAME: 1902-S-202 PLOTTED: Thursday, February 19, 2015 – 3:37pm USER: douglas.szilagyi

SHEET FORMAT IS 22" X 34". IF PRINTED SHEET IS NOT 22" X 34", THEN IT IS NOT TO SCALE

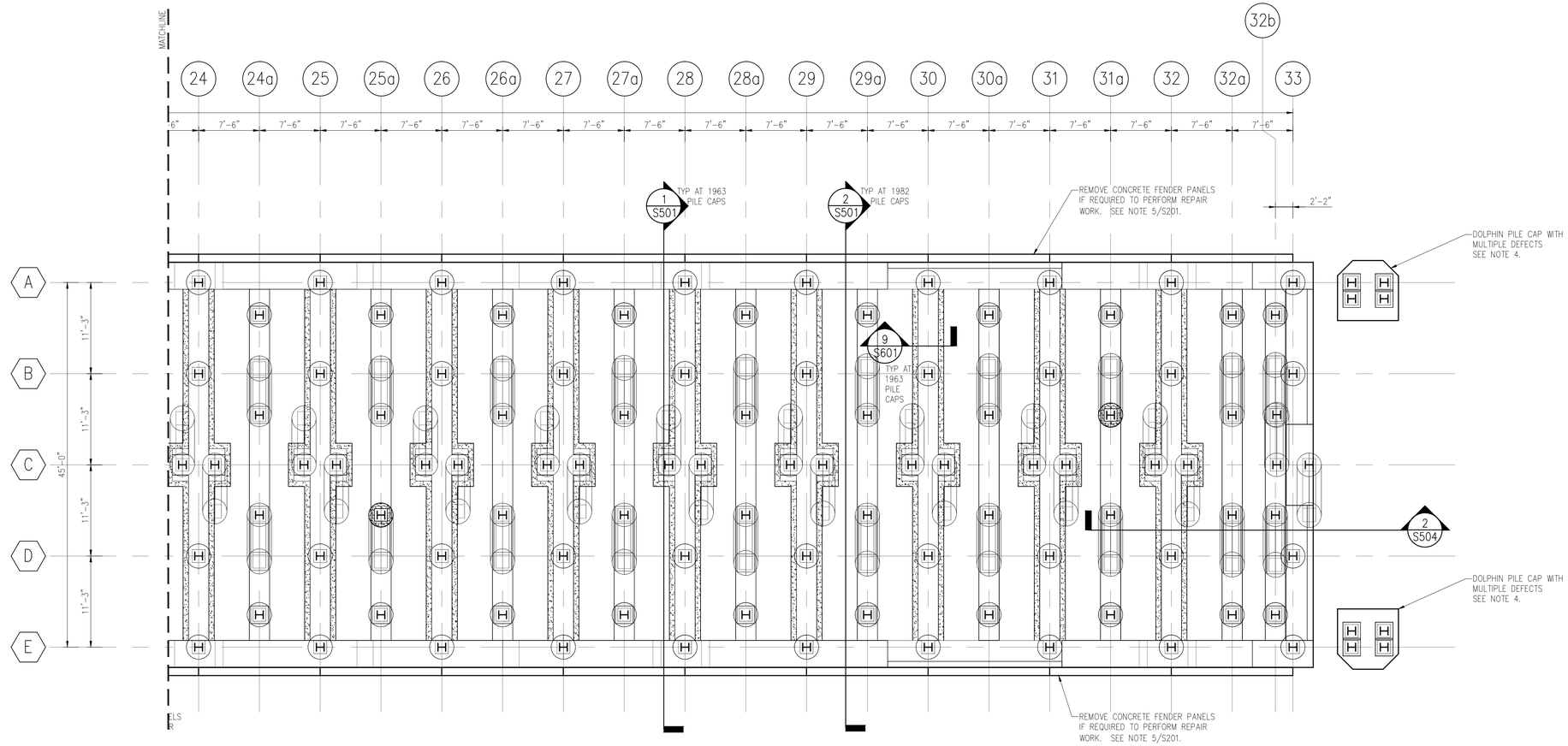

1 SUBSTRUCTURE REPAIR PLAN – GRID 24–33
Scale: 1/8" = 1'-0"

PLAN NOTES

PLAN NOTES:

1. PROVIDE CONCRETE ENCASEMENT OF 1963 PILE CAPS PER LOCATIONS ON PLAN AND DETAIL 9/S601.
2. SEE SHEET S201 FOR ADDITIONAL PLAN NOTES.
3. DOLPHIN PILE CAP WITH MULTIPLE DEFECTS THROUGHOUT ENTIRE CAP INCLUDING CRACKED CONCRETE, SPALLED CONCRETE, AND EXPOSED REBAR. DOLPHIN DEFECTS WERE NOT QUANTIFIED IN THE 2010 INSPECTION REPORT BY HALCROW, INC NOR WERE REPAIR RECOMMENDATIONS FOR DOLPHINS PROVIDED. SEE DETAILS ON SHEET S506 FOR DOLPHIN REPAIRS.

LEGEND

SYMBOLS

- PILE COLUMN
- PILE ROW
- C.I.P. CONCRETE PILE CAP ENCASEMENT (SEE PLAN NOTE 1)
- STEEL H-PILE W/ 26"x26" CONCRETE ENCASEMENT
- BATTERED STEEL H-PILE W/ 26"x26" CONCRETE ENCASEMENT
- SQUARE CONCRETE PILE ENCASEMENT REPAIR, SEE REPAIR SCHEDULE ON SHEET S301–S308
- ROUND CONCRETE PILE ENCASEMENT REPAIR, SEE REPAIR SCHEDULE ON SHEET S301–S308
- STEEL H-PILE W/ 36"ø CONCRETE ENCASEMENT
- BATTERED STEEL H-PILE W/ 36"ø CONCRETE ENCASEMENT

KEYPLAN

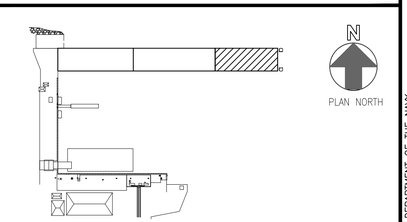

GRAPHIC SCALE

1/8"=1'-0" 0' 5' 10' 20' 30'

SYM	DESCRIPTION	DATE	APPR

NAVFAC

SEAL

A/E INFO

APPROVED

FOR COMMANDER NAVFAC / B.L.T.L.

ACTIVITY

SATISFACTORY TO LATE

DES DAS	DRW DAS	CHK KW	
PROJECT MANAGER	H. KING		
IPT TECH. BRANCH HEAD	S. ZAVOYSKI		
CHIEF ENG/ARCH (CORE)	KW		

DEPARTMENT OF THE NAVY
NAVAL FACILITIES ENGINEERING COMMAND
IPT SOUTH ATLANTIC
NAVAL FACILITIES ENGINEERING COMMAND SOUTHEAST
NAVAL AIR STATION JACKSONVILLE
AUTEC SITE 1
ANDROS ISLAND, BAHAMAS

PIER 1902 REPAIRS

SUBSTRUCTURE REPAIR PLAN – GRID 24–33

SCALE:	SCALE
EPROJECT NO.:	1302903
CONSTR. CONTR. NO.	N69450–XX–C–XXXX
NAVFAC DRAWING NO.	15079052
SHEET	27 OF 56

S203

DRAWFORM REVISION: 7 AUGUST 2009

FILE NAME: P:\CIBL\project_files\FLORIDA\nas key west fl\h\n00213\autec pier repairs~1302903\working technical files\Dwgs\Sheet Files\3 – STRU1902-S-203.dwg LAYOUT NAME: 1902-S-203 PLOTTED: Thursday, February 19, 2015 – 3:37pm USER: douglas.szilagyi

SHEET FORMAT IS 22" X 34". IF PRINTED SHEET IS NOT 22" X 34", THEN IT IS NOT TO SCALE

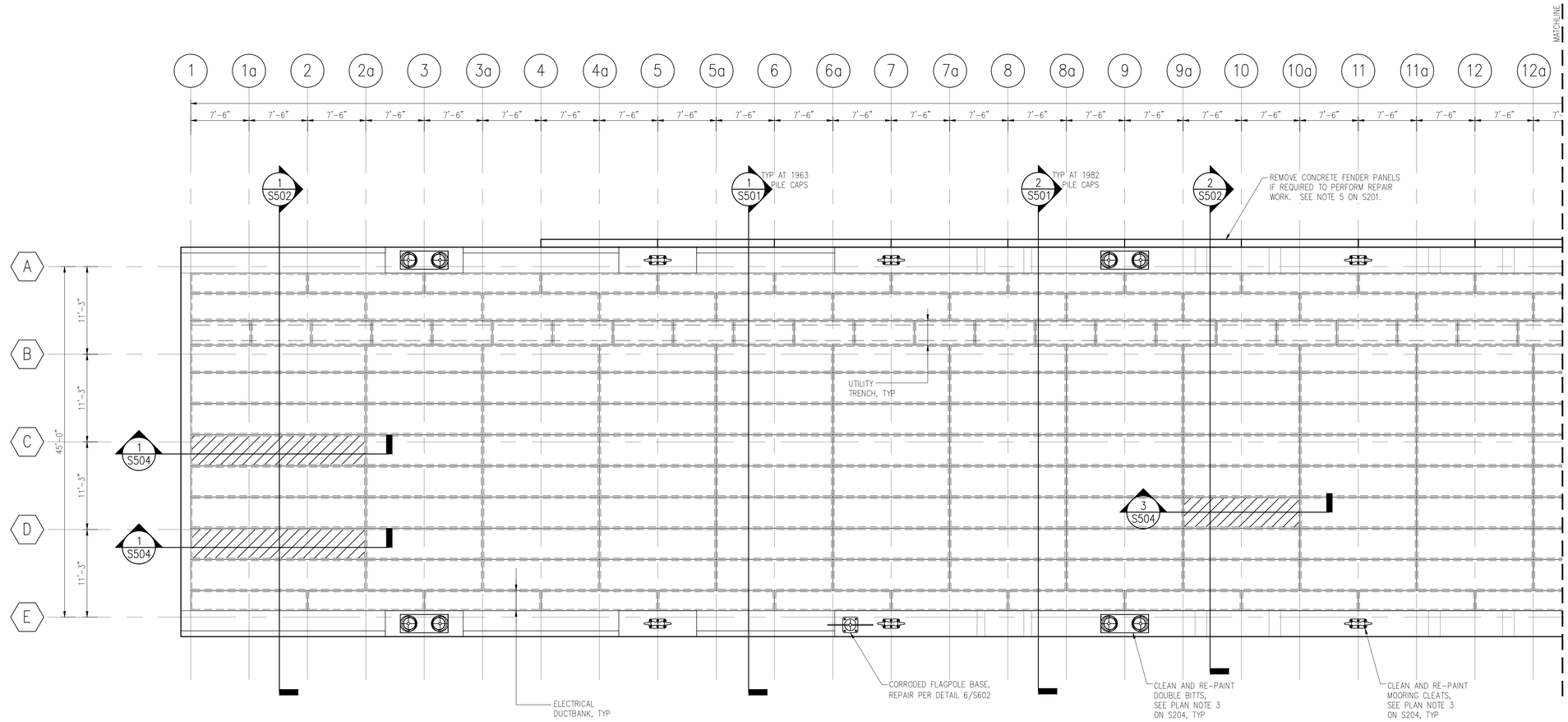

1 SUPERSTRUCTURE REPAIR PLANS – GRID 1–12
Scale: 1/8" = 1'-0"

PLAN NOTES

PLAN NOTES:

1. REPLACE EXISTING PRECAST PLANK AS INDICATED ON DRAWINGS W/ NEW PRECAST CONCRETE PLANK AND C.I.P. CONCRETE TOPPING. SEE DETAILS ON SHEETS S502 THRU S505.
2. SEE SHEET S201 FOR ADDITIONAL PLAN NOTES.
3. MECHANICALLY CLEAN AND RE-PAINT ALL EXISTING MOORING HARDWARE PER PAINT SPECIFICATION 09 90 00. NEW PAINT SHALL BE MARINE GRADE QUALITY INTENDED FOR SALT WATER ENVIRONMENTS PER SPECIFICATION 09 90 00.

LEGEND

SYMBOLS

- 1 PILE COLUMN
- A PILE ROW
- REPLACE EXISTING PRECAST CONCRETE PLANK (SEE PLAN NOTE 1)
- MOORING BOLLARD
- MOORING CLEAT
- DOUBLE BIT
- FLAGPOLE

KEYPLAN

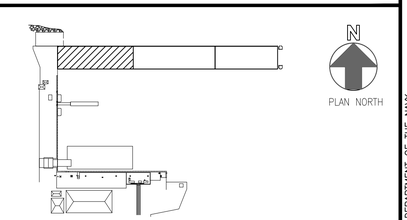

GRAPHIC SCALE

1/8"=1'-0" 0' 5' 10' 20' 30'

SYM	DESCRIPTION	DATE	APPR

NAVFAC

SEAL

A/E INFO

APPROVED

FOR COMMANDER NAVFAC / B.L.T.L.

ACTIVITY

SATISFACTORY TO CITE

DES	DAS	DRW	DAS	CHK	KW
PROJECT MANAGER	H. KING				
IPT TECH. BRANCH HEAD	S. ZAVOYSKI				
CHIEF ENG/ARCH (CORE)	KW				

DEPARTMENT OF THE NAVY
NAVAL FACILITIES ENGINEERING COMMAND
NAVAL FACILITIES ENGINEERING COMMAND SOUTHEAST
NAVAL AIR STATION JACKSONVILLE
IPT SOUTH ATLANTIC
AUTEC SITE 1
ANDROS ISLAND, BAHAMAS

PIER 1902 REPAIRS

SUPERSTRUCTURE REPAIR PLAN – GRID 1–12

SCALE:	SCALE
EPROJECT NO.:	1302903
CONSTR. CONTR. NO.	N69450-XX-C-XXXX
NAVFAC DRAWING NO.	15079053
SHEET	28 OF 56

S204

DRAWFORM REVISION: 7 AUGUST 2009

FILE NAME: P:\CIBL\project_files\FLORIDA\nas key west fl\h\n00213\autec pier repairs~1302903\working technical files\Dwgs\Sheet Files\3 - STRU1902-S-204.dwg LAYOUT NAME: 1902-S-204 PLOTTED: Thursday, February 19, 2015 - 3:37pm USER: douglas.szilagyi

SHEET FORMAT IS 22" X 34". IF PRINTED SHEET IS NOT 22" X 34", THEN IT IS NOT TO SCALE

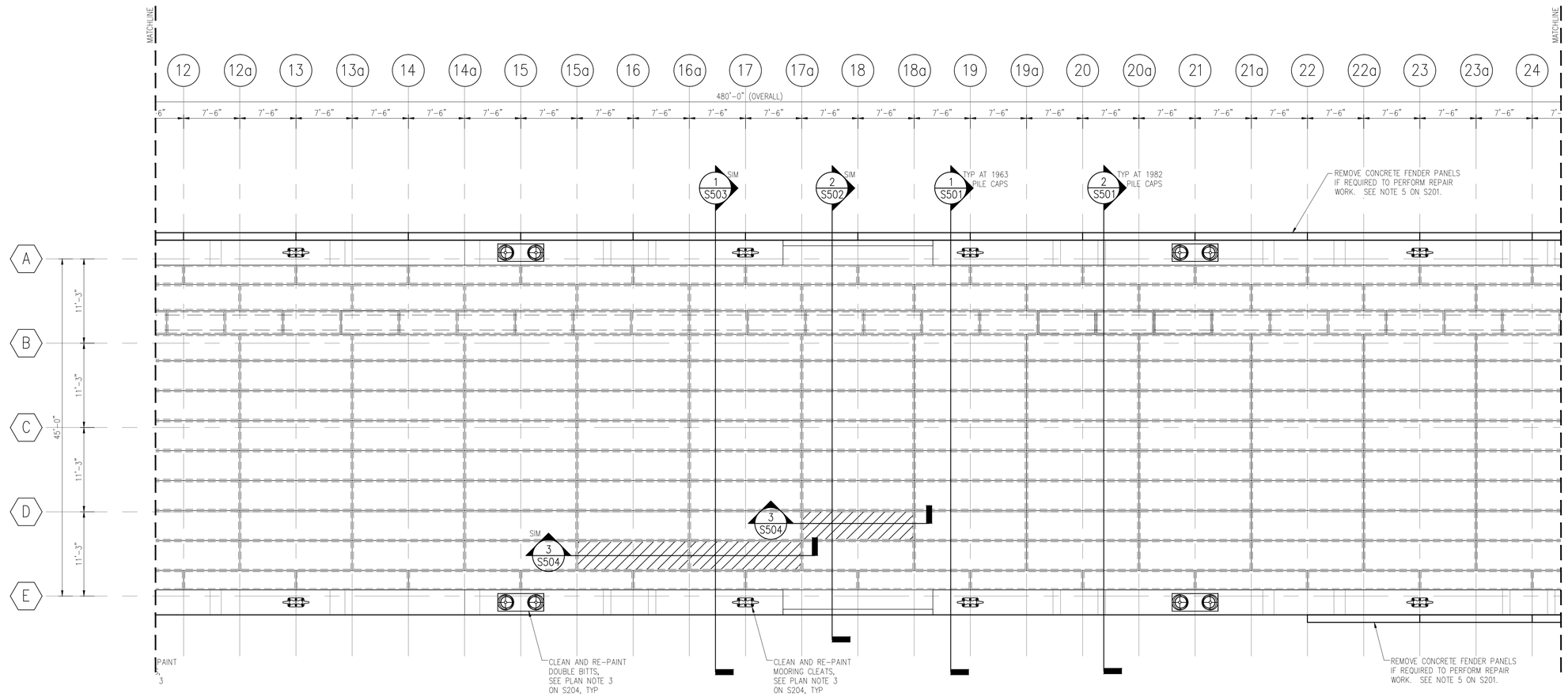

1 SUPERSTRUCTURE REPAIR PLAN – GRID 12–24
Scale: 1/8" = 1'-0"

PLAN NOTES

PLAN NOTES:

1. REPLACE EXISTING PRECAST PLANK AS INDICATED ON DRAWINGS W/ NEW PRECAST CONCRETE PLANK AND C.I.P. CONCRETE TOPPING. SEE DETAILS ON SHEETS S502 THRU S505.
2. SEE SHEET S201 FOR ADDITIONAL PLAN NOTES.

LEGEND

SYMBOLS

- 1 PILE COLUMN
- A PILE ROW
- REPLACE EXISTING PRECAST CONCRETE PLANK (SEE PLAN NOTE 1)
- MOORING BOLLARD
- MOORING CLEAT
- DOUBLE BIT
- FLAGPOLE

KEYPLAN

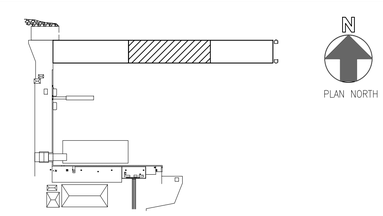

GRAPHIC SCALE

1/8"=1'-0" 0' 5' 10' 20' 30'

SYM	DESCRIPTION	DATE	APPR

NAVFAC

SEAL

A/E INFO

APPROVED

FOR COMMANDER NAVFAC / B.L.T.L.

ACTIVITY

SATISFACTORY TO LATE

DES	DAS	DRW	DAS	CHK	KW
PROJECT MANAGER	H. KING				
IPT TECH. BRANCH HEAD	S. ZAVOYSKI				
CHIEF ENG/ARCH (CORE)	KW				

DEPARTMENT OF THE NAVY
NAVAL FACILITIES ENGINEERING COMMAND
NAVAL FACILITIES ENGINEERING COMMAND SOUTHEAST
IPT SOUTH ATLANTIC
NAVAL AIR STATION JACKSONVILLE
AUTEC SITE 1
ANDROS ISLAND, BAHAMAS

PIER 1902 REPAIRS

SUPERSTRUCTURE REPAIR PLAN – GRID 12–24

SCALE:	SCALE
EPROJECT NO.:	1302903
CONSTR. CONTR. NO.	N69450–XX–C–XXXX
NAVFAC DRAWING NO.	15079054
SHEET	29 OF 56

S205

DRAWFORM REVISION: 7 AUGUST 2009

FILE NAME: P:\CIBL\project_files\FLORIDA\nas key west fl\hjn00213\autec pier repairs~1302903\working technical files\Dwgs\Sheet Files\3 – STRU1902-S-205.dwg LAYOUT NAME: 1902-S-205 PLOTTED: Thursday, February 19, 2015 – 3:37pm USER: douglas.szilagyi

SHEET FORMAT IS 22" X 34". IF PRINTED SHEET IS NOT 22" X 34", THEN IT IS NOT TO SCALE

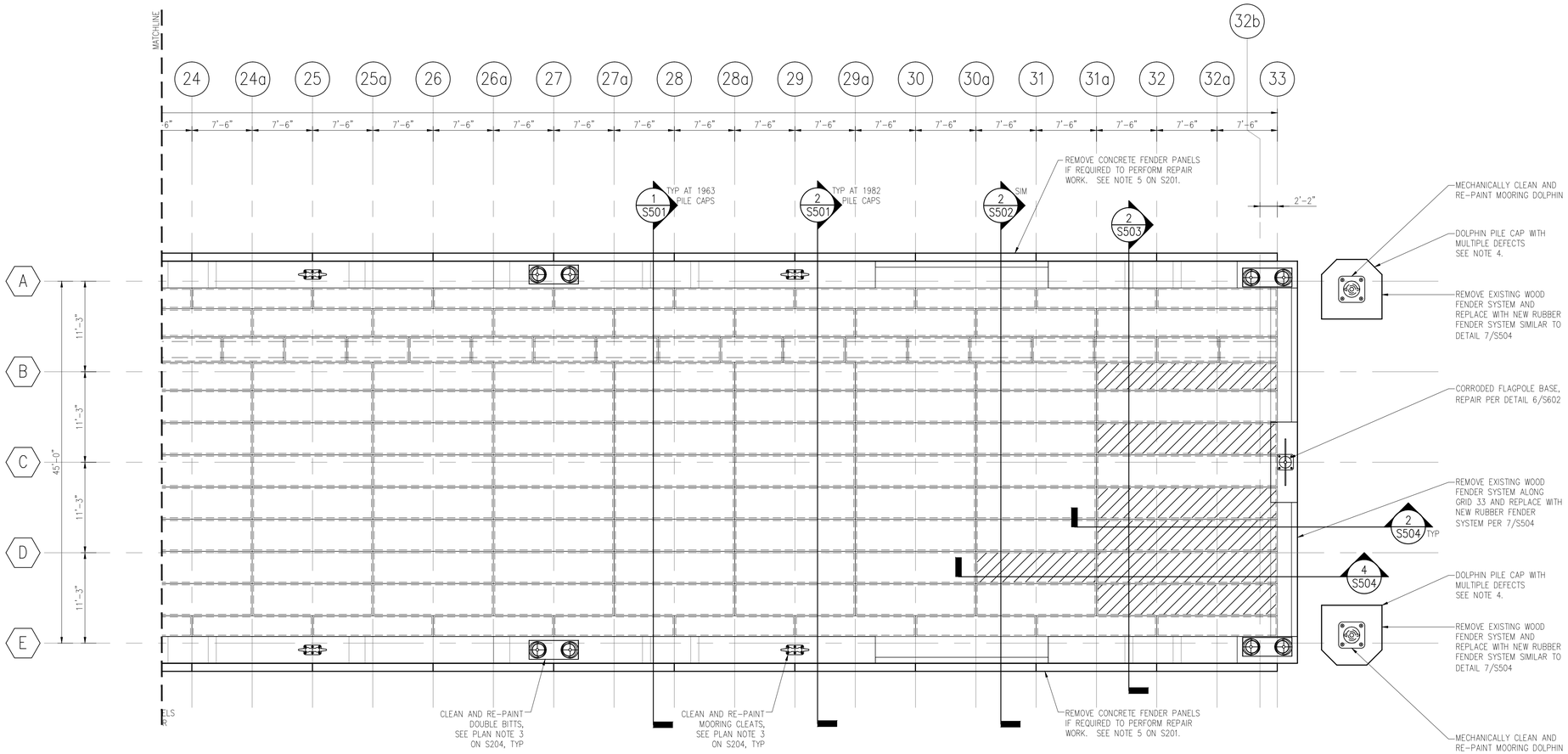

1 SUPERSTRUCTURE REPAIR PLAN – GRID 24–33
Scale: 1/8" = 1'-0"

PLAN NOTES

PLAN NOTES:

1. REPLACE EXISTING PRECAST PLANK AS INDICATED ON DRAWINGS W/ NEW PRECAST CONCRETE PLANK AND C.I.P. CONCRETE TOPPING. SEE DETAILS ON SHEETS S502 THRU S505.
2. SEE SHEET S201 FOR ADDITIONAL PLAN NOTES.
3. DOLPHIN PILE CAP WITH MULTIPLE DEFECTS THROUGHOUT ENTIRE CAP INCLUDING CRACKED CONCRETE, SPALLED CONCRETE, AND EXPOSED REBAR. DOLPHIN DEFECTS WERE NOT QUANTIFIED IN THE 2010 INSPECTION REPORT BY HALCROW, INC NOR WERE REPAIR RECOMMENDATIONS FOR DOLPHINS PROVIDED. SEE DETAILS ON SHEET S506 FOR DOLPHIN REPAIRS.

LEGEND

SYMBOLS

- 1 PILE COLUMN
- A PILE ROW
- REPLACE EXISTING PRECAST CONCRETE PLANK (SEE PLAN NOTE 1)
- MOORING BOLLARD
- MOORING CLEAT
- DOUBLE BIT
- FLAGPOLE

KEYPLAN

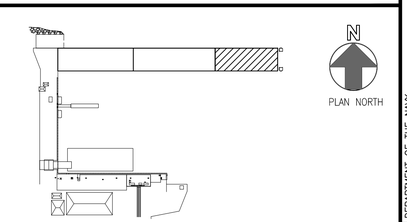

GRAPHIC SCALE

1/8"=1'-0" 0' 5' 10' 20' 30'

SYM	DESCRIPTION	DATE	APPR

NAVFAC

SEAL

A/E INFO

APPROVED

FOR COMMANDER NAVFAC / B.L.T.L.

ACTIVITY

SATISFACTORY TO CITE

DES DAS	DRW DAS	CHK KW	
PROJECT MANAGER	H. KING		
IPT TECH. BRANCH HEAD	S. ZAVOYSKI		
CHIEF ENG/ARCH (CORE)	KW		

DEPARTMENT OF THE NAVY
NAVAL FACILITIES ENGINEERING COMMAND
NAVAL FACILITIES ENGINEERING COMMAND SOUTHEAST
NAVAL AIR STATION JACKSONVILLE
IPT SOUTH ATLANTIC
AUTEC SITE 1
ANDROS ISLAND, BAHAMAS

PIER 1902 REPAIRS

SUPERSTRUCTURE REPAIR PLAN – GRID 24–33

SCALE:	SCALE
EPROJECT NO.:	1302903
CONSTR. CONTR. NO.	N69450–XX–C–XXXX
NAVFAC DRAWING NO.	15079055
SHEET	30 OF 56

S206

DRAWFORM REVISION: 7 AUGUST 2009

FILE NAME: P:\CIBL\project_files\FLORIDA\nas key west fl\hjn00213\autec pier repairs~1302903\working technical files\Dwgs\Sheet Files\3 – STRU1902-S-206.dwg LAYOUT NAME: 1902-S-206 PLOTTED: Thursday, February 19, 2015 – 3:38pm USER: douglas.szilagyi

SHEET FORMAT IS 22" X 34". IF PRINTED SHEET IS NOT 22" X 34", THEN IT IS NOT TO SCALE

REPAIR SCHEDULE (DEFECTS DOCUMENTED IN HALCROW INSPECTION REPORT DATED JANUARY 2010)

MARK	ASSET NAME	LOCATION	CRITICALITY	DEFECT TYPE	BEAM		LENGTH	DECK		AREA IN FT² OR %		CRACK		NUMBER OF EXPOSED BARS	REPAIR DETAILS
					H (IN)	V (IN)	(FT)	X (FT)	Y (FT)			WIDTH (IN)	DEPTH (IN)		
001	ENC	03.0–A.0	003	OCS			0.58			0.29	FT²		4		6/S601
002	ENC	03.0–C.0	002	CKV			0.83					0.12			7/S601
003	ENC	03.0–D.0	002	CKV			0.50					0.12			7/S601
004	ENC	03.0–D.0	002	CKV			0.50					0.12			7/S601
005	ENC	04.0–D.0	002	CKV			0.33					0.12			7/S601
006	ENC	09.5–B.5	003	ERS			1.00			2.50	FT²		4		8/S601
007	ENC	09.5–C.5	003	ERS			0.50			0.42	FT²		3	1	8/S601
008	ENC	10.0–D.0	002	CKV			0.17					0.12			7/S601
009	ENC	12.0–B.0	002	ERS			1.00			0.58	FT²		3		8/S601
010	ENC	15.0–D.0	002	ERS			0.58			1.26	FT²		3		8/S601
011	ENC	16.5–B.0	003	ERS			0.58			0.29	FT²		4		8/S601
012	ENC	16.5–D.5	003	VOD			0.83			0.42	FT²		4		6/S601
013	ENC	17.0–E.0	003	ERS			0.92			0.92	FT²		4		8/S601
014	ENC	25.5–C.5	003	VOD			0.83			0.69	FT²		4		6/S601
015	ENC	31.5–B.5	004	ERS			0.25			0.54	FT²		6		8/S601
016	ENC	31.5–B.5	004	ERS			0.25			0.54	FT²		6		8/S601
017	ENC	31.5–B.5	004	ERS			0.25			0.54	FT²		6		8/S601
018	ENC	31.5–B.5	004	ERS			0.25			0.54	FT²		6		8/S601
019	CBS	02.0–B.5	004	DEL		14	11.00			12.83	FT²				2/S601
020	CBS	02.0–C.0	003	DEL	20		10.00			16.67	FT²				2/S601
021	CBS	02.0–C.5	004	DEL		12	11.00			11.00	FT²				2/S601
022	CBS	02.0–D.5	004	DEL		12	11.00			11.00	FT²				2/S601
023	CBS	02.0–D.7	003	DEL	10		6.00			5.00	FT²				2/S601
024	CBS	02.5–B.7	004	CKH	32		2.00			5.33	FT²	0.03			5/S601
025	CBS	03.0–B.5	004	DEL	30		11.00			27.50	FT²				2/S601
026	CBS	03.0–C.5	004	DEL	30		11.00			27.50	FT²				2/S601
027	CBS	03.0–D.3	002	DEL		8	3.50			2.33	FT²				2/S601
028	CBS	03.0–D.5	003	DEL	10		6.00			5.00	FT²				2/S601
029	CBS	04.0–B.5	004	DEL	24		11.00			22.00	FT²				2/S601
030	CBS	04.0–B.5	004	DEL	10		11.00			9.17	FT²				2/S601
031	CBS	04.0–C.5	002	DEL		9	5.00			3.75	FT²				2/S601
032	CBS	04.0–C.5	004	DEL	24		11.00			22.00	FT²				2/S601
033	CBS	04.0–D.3	002	DEL		12	4.00			4.00	FT²				2/S601
034	CBS	04.0–D.5	004	DEL	24		11.00			22.00	FT²				2/S601
035	CBS	05.0–B.5	004	DEL		14	11.00			12.83	FT²				2/S601
036	CBS	05.0–C.0	002	DEL	18		4.50			6.75	FT²				2/S601
037	CBS	05.0–C.5	004	DEL		14	11.00			12.83	FT²				2/S601
038	CBS	05.0–D.5	004	DEL	8		11.00			7.33	FT²				2/S601
039	CBS	06.0–B.5	003	DEL	24		10.00			20.00	FT²				2/S601
040	CBS	06.0–C.5	004	DEL	24		11.00			22.00	FT²				2/S601
041	CBS	06.0–C.5	003	DEL	24		10.00			20.00	FT²				2/S601
042	CBS	06.0–D.5	004	DEL	18		11.00			16.50	FT²				2/S601
043	CBS	06.2–C.0	003	CKH			3.00					0.25			5/S601
044	CBS	07.0–A.1	002	CKH			3.33					0.06			5/S601
045	CBS	07.0–A.5	004	DEL		12	11.00			11.00	FT²				2/S601
046	CBS	07.0–C.5	003	DEL	18		10.00			20.00	FT²				2/S601
047	CBS	07.0–C.5	003	DEL			10.00								2/S601
048	CBS	07.0–D.2	003	DEL	24		7.00			10.50	FT²				2/S601
049	CBS	07.0–D.5	003	CKH			7.00					0.12			5/S601
050	CBS	07.2–C.0	002	CKH			2.50					0.12			5/S601
051	CBS	08.0–B.5	003	DEL	30		10.00			25.00	FT²				2/S601
052	CBS	08.0–B.8	002	DEL		10	4.00			3.33	FT²				2/S601
053	CBS	08.0–C.2	002	DEL		8	4.00			2.67	FT²				2/S601
054	CBS	08.0–C.5	003	DEL	14		10.00			11.67	FT²				2/S601
055	CBS	08.0–C.5	003	DEL	30		10.00			25.00	FT²				2/S601
056	CBS	08.0–D.5	003	DEL	12		8.00			8.00	FT²				2/S601
057	CBS	09.0–A.5	003	CKH			10.00					0.06			5/S601
058	CBS	09.0–A.5	003	CKH			10.00					0.06			5/S601
059	CBS	09.0–B.5	003	CKH			10.00					0.06			5/S601
060	CBS	09.0–B.7	002	CKH			4.00					0.06			5/S601
061	CBS	09.0–C.5	003	DEL		12	9.00			9.00	FT²				2/S601
062	CBS	09.0–C.5	003	DEL	10		9.00			7.50	FT²				2/S601
063	CBS	09.0–C.5	003	DEL	10		10.00			8.33	FT²				2/S601
064	CBS	09.0–C.5	003	DEL	12		10.00			10.00	FT²				2/S601
065	CBS	09.0–D.1	004	OCS	12		2.00			2.00	FT²		16	2	2/S601
066	CBS	10.0–A.5	003	CKH			10.00					0.03			5/S601
067	CBS	10.0–C.0	002	DEL	32		4.50			12.00	FT²				2/S601
068	CBS	10.0–C.5	003	DEL	30		10.00			25.00	FT²				2/S601
069	CBS	10.0–C.5	003	DEL	30		10.00			25.00	FT²				2/S601
070	CBS	10.0–D.3	003	DEL	18		8.00			12.00	FT²				2/S601
071	CBS	10.0–D.5	003	DEL	18		10.00			15.00	FT²				2/S601
072	CBS	11.0–C.5	003	DEL	30		10.00			25.00	FT²				2/S601
073	CBS	11.0–C.5	003	DEL	30		10.00			25.00	FT²				2/S601
074	CBS	11.0–D.5	004	DEL	10		11.00			9.17	FT²				2/S601
075	CBS	11.0–D.5	003	DEL	30		10.00			25.00	FT²				2/S601
076	CBS	12.0–A.5	003	CKH			10.00					0.03			5/S601
077	CBS	12.0–B.5	002	CKH			4.00					0.06			5/S601
078	CBS	12.0–C.5	003	DEL	30		10.00			25.00	FT²				2/S601
079	CBS	12.0–C.5	004	DEL	24		11.00			22.00	FT²				2/S601

REPAIR SCHEDULE NOTES:

1. REPAIR SCHEDULE IS BASED ON 2010 INSPECTION REPORT BY HALCROW, INC..
2. UNDERWATER AND SURFACE INSPECTION OF ENTIRE PIER MUST BE PERFORMED PRIOR TO REPAIR CONSTRUCTION TO VERIFY TYPE, LOCATION, AND NUMBER OF DEFECTS, SEE GENERAL NOTES ON SHEET S001.
3. ASSET NAME DESIGNATIONS ARE AS FOLLOWS:
   BES = EDGE BEAM
   CBS = BENT CAP
   CDS = DECK CURB
   CDU = ON DECK COVER
   DOS = OVERLAY DECK
   DPS = PRESTRESS PLANK DECK
   ENC = ENCASEMENT PILE
   FBF = BERTHING FRAMING
   SCF = WALL SKIRT
   SFF = FASTENER SKIRT
   VCU = VAULT COVER
3. CRITICAL FACTOR DESIGNATION ARE AS FOLLOWS:
   002 = MODERATE
   003 = MAJOR
   004 = SEVERE
4. DEFECT TYPE DESIGNATIONS ARE AS FOLLOWS:
   CKH = CRACK, HORIZONTAL
   CKM = CRACK, MAP
   CKV = CRACK, VERTICAL
   DEL = DELAMINATED AREA
   ERS = EROSION
   HCM = HONEY COMBING
   OCS = SPALL
   VOD = VOID
   %BK = % BROKEN
   %SL = % SECTION LOSS
5. SEE S500 AND S600 SHEET SERIES FOR REPAIR DETAILS.
6. FOR BIDDING PURPOSES AND PLANNING, ASSUME EACH REPAIR TO BE 20% LARGER IN LENGTH, WIDTH, AND DEPTH THAN WHAT IS SHOWN IN THE REPAIR SCHEDULE.

SYM	DESCRIPTION	DATE	APPR
---	---	---	---

SEAL

A/E INFO

APPROVED

FOR COMMANDER NAVFAC / B.L.T.L.

ACTIVITY

SATISFACTORY TO ENV.

DES DAS DRW DAS CHK KW

PROJECT MANAGER H. KING

IPT TECH. BRANCH HEAD S. ZAVOYSKI

CHIEF ENG/ARCH (CORE) KW

DEPARTMENT OF THE NAVY
NAVAL FACILITIES ENGINEERING COMMAND
IPT SOUTH ATLANTIC
AUTEC SITE 1

NAVAL FACILITIES ENGINEERING COMMAND SOUTHEAST
NAVAL AIR STATION JACKSONVILLE

ANDROS ISLAND, BAHAMAS

PIER 1902 REPAIRS

REPAIR SCHEDULE

SCALE: SCALE

EPROJECT NO.: 1302903

CONSTR. CONTR. NO. N69450–XX–C–XXXX

NAVFAC DRAWING NO. 15079056

SHEET 31 OF 56

S301

DRAWFORM REVISION: 7 AUGUST 2009

FILE NAME: P:\CBL\project_files\FLORIDA\nas key west f(h)h\00213\autec pier repairs-1302903\working technical files\Dwgs\Sheet Files\3 - STRU\1902-S-301.dwg LAYOUT NAME: 1902-S-301 PLOTTED: Thursday, February 19, 2015 - 3:39pm USER: douglas.szilagyi

SHEET FORMAT IS 22" X 34". IF PRINTED SHEET IS NOT 22" X 34", THEN IT IS NOT TO SCALE

MARK	ASSET NAME	LOCATION	CRITICALITY	DEFECT TYPE	BEAM		LENGTH	DECK		AREA IN FT² OR %		CRACK		NUMBER OF EXPOSED BARS	REPAIR DETAILS
					H (IN)	V (IN)	(FT)	X (FT)	Y (FT)			WIDTH (IN)	DEPTH (IN)		
080	CBS	12.0–D.5	003	DEL	24		10.00			20.00	FT²				2/S601
081	CBS	12.0–D.5	004	DEL	28		11.00			25.67	FT²				2/S601
082	CBS	13.0–A.5	003	CKH			10.00					0.03			5/S601
083	CBS	13.0–B.5	003	CKH			7.00					0.06			5/S601
084	CBS	13.0–C.5	003	DEL	30		10.00			25.00	FT²				2/S601
085	CBS	13.0–C.5	003	DEL	28		10.00			23.33	FT²				2/S601
086	CBS	13.0–D.3	002	CKH			3.50					0.06			5/S601
087	CBS	13.0–D.5	003	DEL	24		8.00			16.00	FT²				2/S601
088	CBS	14.0–A.5	002	CKH			5.00					0.03			5/S601
089	CBS	14.0–B.5	003	DEL		18	6.00			9.00	FT²				2/S601
090	CBS	14.0–B.5	003	DEL	24		10.00			20.00	FT²				2/S601
091	CBS	14.0–C.5	003	DEL	30		10.00			25.00	FT²				2/S601
092	CBS	14.0–C.5	003	DEL	30		10.00			25.00	FT²				2/S601
093	CBS	14.0–C.5	003	DEL	28		10.00			23.33	FT²				2/S601
094	CBS	14.0–D.5	003	DEL	30		10.00			25.00	FT²				2/S601
095	CBS	14.0–D.5	003	DEL	30		10.00			25.00	FT²				2/S601
096	CBS	14.0–D.5	003	DEL	24		10.00			20.00	FT²				2/S601
097	CBS	15.0–A.5	003	CKH			10.00					0.03			5/S601
098	CBS	15.0–B.5	003	CKH			10.00					0.06			5/S601
099	CBS	15.0–B.5	003	DEL	18		10.00			15.00	FT²				2/S601
100	CBS	15.0–C.5	003	DEL	30		10.00			25.00	FT²				2/S601
101	CBS	15.0–C.5	003	DEL	30		10.00			25.00	FT²				2/S601
102	CBS	15.0–D.5	003	DEL	12		10.00			10.00	FT²				2/S601
103	CBS	15.0–D.5	003	DEL	14		10.00			11.67	FT²				2/S601
104	CBS	15.7–E.0	002	CKH			5.00					0.06			5/S601
105	CBS	16.0–A.5	003	CKH			10.00					0.06			5/S601
106	CBS	16.0–A.5	003	CKH			10.00					0.06			5/S601
107	CBS	16.0–B.5	003	CKH			10.00					0.06			5/S601
108	CBS	16.0–B.5	003	CKH			10.00					0.06			5/S601
109	CBS	16.0–B.5	003	CKH			6.00					0.06			5/S601
110	CBS	16.0–B.5	003	DEL	18		7.00			10.50	FT²				2/S601
111	CBS	16.0–C.5	003	DEL	24		10.00			20.00	FT²				2/S601
112	CBS	16.0–D.5	003	CKH			10.00					0.12			5/S601
113	CBS	16.0–D.5	003	CKH			10.00					0.12			5/S601
114	CBS	16.0–D.5	003	CKH			10.00					0.06			5/S601
115	CBS	17.0–B.5	002	CKH			5.00					0.06			5/S601
116	CBS	17.0–B.5	002	CKH			5.00					0.06			5/S601
117	CBS	17.0–B.5	003	DEL		18	8.00			12.00	FT²				2/S601
118	CBS	17.0–C.5	002	DEL		20	5.00			8.33	FT²				2/S601
119	CBS	17.0–D.5	003	CKH			6.00					0.06			5/S601
120	CBS	17.0–D.5	003	CKH			6.00					0.06			5/S601
121	CBS	18.0–A.5	003	CKH			10.00					0.06			5/S601
122	CBS	18.0–B.5	003	CKH			10.00					0.12			5/S601
123	CBS	18.0–B.5	003	CKH			10.00					0.12			5/S601
124	CBS	18.0–C.5	003	DEL	32		10.00			26.67	FT²				2/S601
125	CBS	18.0–C.5	003	DEL	18		6.00			9.00	FT²				2/S601
126	CBS	18.0–D.5	003	DEL		18	10.00			15.00	FT²				2/S601
127	CBS	19.0–A.5	003	CKH			10.00					0.06			5/S601
128	CBS	19.0–B.0	004	DEL	6		13.33			6.67	FT²				2/S601
129	CBS	19.0–B.5	003	CKH			10.00					0.12			5/S601
130	CBS	19.0–B.5	003	DEL		12	10.00			10.00	FT²				2/S601
131	CBS	19.0–C.5	003	CKH			6.00					0.06			5/S601
132	CBS	19.0–C.5	003	DEL	24		8.00			16.00	FT²				2/S601
133	CBS	19.0–D.5	003	DEL			10.00			5.83	FT²				2/S601
134	CBS	20.0–A.5	003	CKH			10.00					0.06			5/S601
135	CBS	20.0–B.5	003	CKH			10.00					0.06			5/S601
136	CBS	20.0–B.5	003	CKH			10.00					0.06			5/S601
137	CBS	20.0–B.5	003	DEL	16		10.00			13.33	FT²				2/S601
138	CBS	20.0–C.5	003	DEL	18		7.00			10.50	FT²				2/S601
139	CBS	20.0–C.5	003	DEL		18	9.00			13.50	FT²				2/S601
140	CBS	21.0–B.5	003	CKH			10.00					0.12			5/S601
141	CBS	21.0–B.7	002	DEL	8		3.50			2.33	FT²				2/S601
142	CBS	21.0–C.5	003	DEL		16	9.00			12.00	FT²				2/S601
143	CBS	21.0–C.5	003	DEL		12	10.00			10.00	FT²				2/S601
144	CBS	21.0–D.5	004	CKH		12	10.00			10.00	FT²				5/S601
145	CBS	21.0–D.5	004	CKH		12	10.00			10.00	FT²				5/S601
146	CBS	22.0–C.5	003	DEL	24		6.00			12.00	FT²				2/S601
147	CBS	22.0–D.5	003	CKH			10.00					0.12			5/S601
148	CBS	22.0–D.5	003	CKH			10.00					0.12			5/S601
149	CBS	22.0–D.7	003	OCS		16	3.00			4.00	FT²		5		2/S601
150	CBS	22.5–D.9	004	HCM		14	2.50			2.92	FT²		4		4/S602
151	CBS	22.5–D.9	002	VOD		4	0.25			0.08	FT²		3		2/S601
152	CBS	23.0–A.5	003	CKH			10.00					0.06			5/S601
153	CBS	23.0–B.5	003	CKH			10.00					0.06			5/S601
154	CBS	23.0–B.5	003	CKH			10.00					0.06			5/S601
155	CBS	23.0–C.5	003	DEL		12	10.00			10.00	FT²				2/S601
156	CBS	23.0–C.5	003	DEL		18	9.00			13.50	FT²				2/S601
157	CBS	23.0–D.5	003	CKH			10.00					0.12			5/S601
158	CBS	23.0–D.5	002	CKH			5.00					0.06			5/S601
159	CBS	23.5–D.9	004	VOD		16	2.50			3.33	FT²		6		2/S601
160	CBS	24.0–B.5	003	CKH			10.00					0.06			5/S601

REPAIR SCHEDULE NOTES:

1. REPAIR SCHEDULE IS BASED ON 2010 INSPECTION REPORT BY HALCROW, INC..
2. UNDERWATER AND SURFACE INSPECTION OF ENTIRE PIER MUST BE PERFORMED PRIOR TO REPAIR CONSTRUCTION TO VERIFY TYPE, LOCATION, AND NUMBER OF DEFECTS, SEE GENERAL NOTES ON SHEET S001.
3. ASSET NAME DESIGNATIONS ARE AS FOLLOWS:
   BES = EDGE BEAM
   CBS = BENT CAP
   CDS = DECK CURB
   CDU = ON DECK COVER
   DOS = OVERLAY DECK
   DPS = PRESTRESS PLANK DECK
   ENC = ENCASEMENT PILE
   FBF = BERTHING FRAMING
   SCF = WALL SKIRT
   SFF = FASTENER SKIRT
   VCU = VAULT COVER
3. CRITICAL FACTOR DESIGNATION ARE AS FOLLOWS:
   002 = MODERATE
   003 = MAJOR
   004 = SEVERE
4. DEFECT TYPE DESIGNATIONS ARE AS FOLLOWS:
   CKH = CRACK, HORIZONTAL
   CKM = CRACK, MAP
   CKV = CRACK, VERTICAL
   DEL = DELAMINATED AREA
   ERS = EROSION
   HCM = HONEY COMBING
   OCS = SPALL
   VOD = VOID
   %BK = % BROKEN
   %SL = % SECTION LOSS
5. SEE S500 AND S600 SHEET SERIES FOR REPAIR DETAILS.
6. FOR BIDDING PURPOSES AND PLANNING, ASSUME EACH REPAIR TO BE 20% LARGER IN LENGTH, WIDTH, AND DEPTH THAN WHAT IS SHOWN IN THE REPAIR SCHEDULE.

SYM	DESCRIPTION	DATE	APPR
---	---	---	---

SEAL

A/E INFO

APPROVED

FOR COMMANDER NAVFAC / B.L.T.L.

ACTIVITY

SATISFACTORY TO USE

DES DAS | DRW DAS | CHK KW

PROJECT MANAGER H. KING

IPT TECH. BRANCH HEAD S. ZAVOYSKI

CHIEF ENG/ARCH (CORE) KW

DEPARTMENT OF THE NAVY
NAVAL FACILITIES ENGINEERING COMMAND
IPT SOUTH ATLANTIC
AUTEC SITE 1

NAVAL FACILITIES ENGINEERING COMMAND
NAVAL FACILITIES ENGINEERING COMMAND SOUTHEAST
NAVAL AIR STATION JACKSONVILLE
ANDROS ISLAND, BAHAMAS

PIER 1902 REPAIRS

REPAIR SCHEDULE

SCALE: SCALE

EPROJECT NO.: 1302903

CONSTR. CONTR. NO. N69450–XX–C–XXXX

NAVFAC DRAWING NO. 15079057

SHEET 32 OF 56

S302

DRAWFORM REVISION: 7 AUGUST 2009

FILE NAME: P:\CBL\project_files\FLORIDA\nas key west tl\hi00213\autec per repairs-1302903\working technical files\Dwgs\Sheet Files\3 - SITRU1902-S-302.dwg LAYOUT NAME: 1902-S-302 PLOTTED: Thursday, February 19, 2015 - 3:40pm USER: douglas.szilagyi

SHEET FORMAT IS 22" X 34". IF PRINTED SHEET IS NOT 22" X 34", THEN IT IS NOT TO SCALE

MARK	ASSET NAME	LOCATION	CRITICALITY	DEFECT TYPE	BEAM		LENGTH	DECK		AREA IN FT² OR %		CRACK		NUMBER OF EXPOSED BARS	REPAIR DETAILS
					H (IN)	V (IN)	(FT)	X (FT)	Y (FT)			WIDTH (IN)	DEPTH (IN)		
161	CBS	24.0–B.5	003	CKH			10.00					0.12			5/S601
162	CBS	24.0–C.3	003	DEL		24	6.00			12.00	FT²				2/S601
163	CBS	24.0–C.5	003	OCS	8		1.50			1.00	FT²		4		2/S601
164	CBS	24.0–D.3	003	CKH			6.00					0.06			5/S601
165	CBS	24.0–D.5	003	CKH			10.00					0.12			5/S601
166	CBS	24.5–D.9	004	VOD	3		1.00			0.25	FT²		26		2/S601
167	CBS	25.0–A.5	003	CKH			10.00					0.06			5/S601
168	CBS	25.0–B.5	003	CKH			10.00					0.06			5/S601
169	CBS	25.0–B.5	003	CKH			10.00					0.06			5/S601
170	CBS	25.0–C.0	002	CKH			4.00					0.06			5/S601
171	CBS	25.0–C.5	003	DEL		18	10.00			15.00	FT²				2/S601
172	CBS	25.0–C.5	003	DEL	18		10.00			15.00	FT²				2/S601
173	CBS	25.0–D.7	002	OCS		9	1.17			0.88	FT²		3		2/S601
174	CBS	25.5–D.9	004	VOD		6	2.50			1.25	FT²		6		2/S601
175	CBS	26.0–B.5	003	CKH			10.00					0.06			5/S601
176	CBS	26.0–C.1	002	OCS	12		0.33			0.33	FT²		3		2/S601
177	CBS	26.0–D.5	004	CKH		6	10.00			5.00	FT²				5/S601
178	CBS	26.0–D.5	004	CKH		6	10.00			5.00	FT²				5/S601
179	CBS	26.5–A.0	003	OCS		12	2.67			2.67	FT²		4		2/S601
180	CBS	26.5–D.9	004	VOD		6	2.50			1.25	FT²		6		2/S601
181	CBS	27.0–A.5	003	CKH			10.00					0.06			5/S601
182	CBS	27.0–A.5	003	CKH			10.00					0.06			5/S601
183	CBS	27.0–A.5	003	CKH			10.00					0.06			5/S601
184	CBS	27.0–B.5	003	CKH			10.00					0.06			5/S601
185	CBS	27.0–B.5	003	CKH			10.00					0.06			5/S601
186	CBS	27.0–B.5	002	DEL	10		3.50			2.92	FT²				2/S601
187	CBS	27.0–C.5	003	DEL		24	10.00			20.00	FT²				2/S601
188	CBS	27.0–C.5	003	DEL	18		10.00			15.00	FT²				2/S601
189	CBS	27.0–D.5	003	CKH			10.00					0.12			5/S601
190	CBS	27.0–D.5	003	CKH			10.00					0.12			5/S601
191	CBS	27.0–D.5	003	CKH			10.00					0.06			5/S601
192	CBS	27.5–D.9	002	VOD		4	1.00			0.33	FT²		3		2/S601
193	CBS	28.0–A.5	003	CKH			10.00					0.06			5/S601
194	CBS	28.0–A.5	003	CKH			10.00					0.06			5/S601
195	CBS	28.0–B.5	003	CKH			10.00					0.12			5/S601
196	CBS	28.0–B.5	003	CKH			10.00					0.25			5/S601
197	CBS	28.0–C.5	003	DEL		12	10.00			10.00	FT²				2/S601
198	CBS	28.0–C.5	003	DEL		12	10.00			10.00	FT²				2/S601
199	CBS	28.0–D.5	003	CKH			10.00					0.06			5/S601
200	CBS	28.0–D.5	003	CKH			10.00					0.06			5/S601
201	CBS	28.5–D.9	004	HCM		9	2.50			1.88	FT²		4		4/S602
202	CBS	28.5–D.9	004	VOD		9	2.50			1.88	FT²		6		2/S601
203	CBS	29.0–A.5	003	CKH			10.00					0.12			5/S601
204	CBS	29.0–A.5	003	CKH			10.00					0.12			5/S601
205	CBS	29.0–B.5	003	CKH			10.00					0.25			5/S601
206	CBS	29.0–B.5	003	CKH			10.00					0.25			5/S601
207	CBS	29.0–B.5	003	DEL		12	8.33			8.33	FT²				2/S601
208	CBS	29.0–C.5	003	DEL		12	8.00			8.00	FT²				2/S601
209	CBS	29.0–D.5	003	CKH			10.00					0.06			5/S601
210	CBS	29.0–D.5	003	CKH			10.00					0.06			5/S601
211	CBS	30.0–A.2	002	CKH			5.00					0.06			5/S601
212	CBS	30.0–B.5	003	CKH			10.00					0.12			5/S601
213	CBS	30.0–B.5	003	CKH			10.00					0.12			5/S601
214	CBS	30.0–C.5	003	DEL		18	10.00			15.00	FT²				2/S601
215	CBS	30.0–C.5	003	DEL	12		9.00			9.00	FT²				2/S601
216	CBS	30.0–D.5	003	CKH			10.00					0.12			5/S601
217	CBS	30.0–D.5	003	CKH			10.00					0.12			5/S601
218	CBS	31.0–A.5	003	CKH			10.00					0.06			5/S601
219	CBS	31.0–B.5	003	CKH			10.00					0.06			5/S601
220	CBS	31.0–B.5	003	CKH			10.00					0.06			5/S601
221	CBS	31.0–B.5	003	CKH			10.00					0.06			5/S601
222	CBS	31.0–C.5	002	DEL	18		5.00			7.50	FT²				2/S601
223	CBS	31.0–C.5	003	DEL	18		10.00			15.00	FT²				2/S601
224	CBS	31.0–D.5	003	CKH			6.00					0.06			5/S601
225	CBS	31.0–D.5	003	CKH			10.00					0.06			5/S601
226	CBS	31.0–D.5	003	CKH			10.00					0.06			5/S601
227	CBS	31.0–D.5	003	CKH			10.00					0.06			5/S601
228	CBS	31.5–D.9	003	VOD		10	2.50			2.08	FT²		5		2/S601
229	CBS	32.0–B.5	003	OCS		12	3.50			3.50	FT²		5	1	2/S601
230	CBS	32.0–C.5	003	DEL		12	10.00			10.00	FT²				2/S601
231	CBS	32.0–D.3	002	CKH			4.00					0.06			5/S601
232	CBS	32.5–A.9	003	DEL		6	8.83			4.42	FT²				2/S601
233	CBS	33.0–A.5	003	CKH			10.00					0.06			5/S601
234	CBS	33.0–D.5	003	CKH			10.00					0.06			5/S601
235	CBS	33.0–D.5	003	CKH			10.00					0.06			5/S601
236	BES	01.3–E.0	003	DEL		16	6.00			8.00	FT²				2/S601
237	BES	02.3–A.0	002	OCS		9	1.25			0.94	FT²		3		2/S601
238	BES	02.3–E.0	003	DEL		48	7.00			28.00	FT²				2/S601
239	BES	03.3–E.0	003	DEL		32	7.00			18.67	FT²				2/S601
240	BES	03.8–E.0	003	DEL		12	7.00			7.00	FT²				2/S601
241	BES	04.5–E.0	004	CKH			15.00					0.12			5/S601

REPAIR SCHEDULE NOTES:

1. REPAIR SCHEDULE IS BASED ON 2010 INSPECTION REPORT BY HALCROW, INC..
2. UNDERWATER AND SURFACE INSPECTION OF ENTIRE PIER MUST BE PERFORMED PRIOR TO REPAIR CONSTRUCTION TO VERIFY TYPE, LOCATION, AND NUMBER OF DEFECTS, SEE GENERAL NOTES ON SHEET S001.
3. ASSET NAME DESIGNATIONS ARE AS FOLLOWS:
   BES = EDGE BEAM
   CBS = BENT CAP
   CDS = DECK CURB
   CDU = ON DECK COVER
   DOS = OVERLAY DECK
   DPS = PRESTRESS PLANK DECK
   ENC = ENCASEMENT PILE
   FBF = BERTHING FRAMING
   SCF = WALL SKIRT
   SFF = FASTENER SKIRT
   VCU = VAULT COVER
3. CRITICAL FACTOR DESIGNATION ARE AS FOLLOWS:
   002 = MODERATE
   003 = MAJOR
   004 = SEVERE
4. DEFECT TYPE DESIGNATIONS ARE AS FOLLOWS:
   CKH = CRACK, HORIZONTAL
   CKM = CRACK, MAP
   CKV = CRACK, VERTICAL
   DEL = DELAMINATED AREA
   ERS = EROSION
   HCM = HONEY COMBING
   OCS = SPALL
   VOD = VOID
   %BK = % BROKEN
   %SL = % SECTION LOSS
5. SEE S500 AND S600 SHEET SERIES FOR REPAIR DETAILS.
6. FOR BIDDING PURPOSES AND PLANNING, ASSUME EACH REPAIR TO BE 20% LARGER IN LENGTH, WIDTH, AND DEPTH THAN WHAT IS SHOWN IN THE REPAIR SCHEDULE.

SYM	DESCRIPTION	DATE	APPR
---	---	---	---

SEAL

A/E INFO

APPROVED

FOR COMMANDER NAVFAC / B.L.T.L.

ACTIVITY

SATISFACTORY TO USE

DES DAS DRW DAS CHK KW

PROJECT MANAGER H. KING

IPT TECH. BRANCH HEAD S. ZAVOYSKI

CHIEF ENG/ARCH (CORE) KW

DEPARTMENT OF THE NAVY
NAVAL FACILITIES ENGINEERING COMMAND
IPT SOUTH ATLANTIC
AUTEC SITE 1

NAVAL FACILITIES ENGINEERING COMMAND
NAVAL FACILITIES ENGINEERING COMMAND SOUTHEAST
NAVAL AIR STATION JACKSONVILLE
ANDROS ISLAND, BAHAMAS

PIER 1902 REPAIRS

REPAIR SCHEDULE

SCALE: SCALE
EPROJECT NO.: 1302903
CONSTR. CONTR. NO. N69450–XX–C–XXXX
NAVFAC DRAWING NO. 15079058
SHEET 33 OF 56

S303

DRAWFORM REVISION: 7 AUGUST 2009

SHEET FORMAT IS 22" X 34". IF PRINTED SHEET IS NOT 22" X 34", THEN IT IS NOT TO SCALE

FILE NAME: P:\CBL\project_files\FLORIDA\nas key west f(h)\h00213\autec per repairs-1302903\working technical files\Dwgs\Sheet Files\3 - SITRU1902-S-303.dwg LAYOUT NAME: 1902-S-303 PLOTTED: Thursday, February 19, 2015 - 3:41pm USER: douglas.szilagyi

MARK	ASSET NAME	LOCATION	CRITICALITY	DEFECT TYPE	BEAM		LENGTH	DECK		AREA IN FT² OR %		CRACK		NUMBER OF EXPOSED BARS	REPAIR DETAILS
					H (IN)	V (IN)	(FT)	X (FT)	Y (FT)			WIDTH (IN)	DEPTH (IN)		
242	BES	04.7–A.0	002	CKH			4.17					0.12			5/S601
243	BES	05.3–A.0	002	CKH			4.17					0.06			5/S601
244	BES	05.7–E.0	003	CKH			7.00					0.25			5/S601
245	BES	06.3–A.0	002	CKH			4.17					0.06			5/S601
246	BES	06.5–E.0	004	CKH			15.00					0.12			5/S601
247	BES	06.7–A.0	002	DEL		22	4.00			7.33	FT²				2/S601
248	BES	07.3–A.0	002	DEL		20	4.17			6.94	FT²				2/S601
249	BES	07.5–E.0	003	CKH			10.00					0.12			5/S601
250	BES	08.3–E.0	003	DEL	30		7.00			17.50	FT²				2/S601
251	BES	08.5–A.0	002	CKH			5.00					0.12			5/S601
252	BES	08.5–E.0	003	CKH			15.00					0.12			5/S601
253	BES	09.3–E.0	002	DEL		10	3.50			2.92	FT²				2/S601
254	BES	09.5–A.0	003	CKH			6.00					0.06			5/S601
255	BES	09.5–A.0	003	CKH			6.00					0.06			5/S601
256	BES	10.5–A.0	002	DEL		20	5.00			8.33	FT²				2/S601
257	BES	11.0–E.0	003	CKH			7.00					0.25			5/S601
258	BES	11.0–E.0	003	CKH			7.00					0.25			5/S601
259	BES	12.5–A.6	002	CKH			5.00					0.12			5/S601
260	BES	12.5–E.0	004	CKH			13.00					0.12			5/S601
261	BES	12.5–E.0	004	OCS		12	15.00			15.00	FT²		4	1	2/S601
262	BES	13.5–E.0	004	DEL	14		15.00			17.50	FT²				2/S601
263	BES	13.7–A.0	004	OCS		10	4.00			3.33	FT²		6		2/S601
264	BES	14.3–A.0	003	OCS		7	3.00			1.75	FT²		4		2/S601
265	BES	14.5–E.0	004	DEL	16		15.00			20.00	FT²				2/S601
266	BES	16.4–E.0	003	CKH			10.00					0.12			5/S601
267	BES	16.4–E.0	003	CKH			10.00					0.12			5/S601
268	BES	16.4–E.0	003	CKH			10.00					0.12			5/S601
269	BES	16.5–A.0	004	CKH			13.00					0.06			5/S601
270	BES	18.2–E.0	002	CKH			3.33					0.12			5/S601
271	BES	18.5–E.0	003	CKH			10.00					0.12			5/S601
272	BES	18.7–E.0	002	CKH			4.00					0.12			5/S601
273	BES	19.5–E.0	003	CKH			10.00					0.06			5/S601
274	BES	19.5–E.0	003	CKH			10.00					0.06			5/S601
275	BES	19.7–A.0	003	OCS		12	3.00			3.00	FT²		4		2/S601
276	BES	20.5–A.0	004	CKH			15.00					0.25			5/S601
277	BES	20.5–E.0	003	CKH			10.00					0.12			5/S601
278	BES	21.5–A.0	004	CKH			11.67					0.06			5/S601
279	BES	21.5–E.0	003	CKH			10.00					0.12			5/S601
280	BES	22.3–E.0	002	CKH			4.00					0.06			5/S601
281	BES	22.3–E.0	002	CKH			4.00					0.06			5/S601
282	BES	23.5–A.0	004	CKH			13.33					0.06			5/S601
283	BES	23.5–E.0	003	CKH			10.00					0.12			5/S601
284	BES	25.0–A.0	002	DEL		6	4.33			2.17	FT²				2/S601
285	BES	25.5–E.0	003	CKH			10.00					0.06			5/S601
286	BES	26.7–E.0	003	CKH			6.00					0.12			5/S601
287	BES	28.2–A.0	002	CKH			0.75					0.12			5/S601
288	BES	28.5–E.0	003	CKH			10.00					0.06			5/S601
289	BES	28.5–E.0	003	CKH			10.00					0.06			5/S601
290	BES	29.5–E.0	003	CKH			6.00					0.06			5/S601
291	BES	29.5–E.0	003	CKH			6.00					0.06			5/S601
292	BES	30.5–A.0	004	CKH			11.67					0.06			5/S601
293	BES	30.5–A.0	003	OCS		6	10.00			5.00	FT²		4		2/S601
294	BES	31.2–A.0	003	OCS		12	4.17			4.17	FT²		4	1	2/S601
295	BES	32.5–E.0	004	OCS		13	12.00			13.00	FT²		6		2/S601
296	BES	32.6–A.0	003	OCS		10	3.00			2.50	FT²		4	1	2/S601
297	DOS	01.5–E.0	004	CKM			15.00	15.00	2.50	37.50	FT²	0.06			7/S602
298	DOS	08.6–A.0	003	CKH			5.17					0.12			3/S602
299	DOS	10.7–A.0	003	OCS			3.00	3.00	0.83	2.50	FT²		2	2	1/S602
300	DOS	11.1–A.0	003	DEL			10.00	10.00	0.83	8.33	FT²				1/S602
301	DOS	15.2–A.0	004	OCS			2.17	2.67	0.50	1.08	FT²		6		2/S602
302	DOS	15.6–A.0	002	DEL			3.50	3.50	0.50	1.75	FT²				1/S602
303	DOS	16.5–A.0	004	CKH			30.00					0.12			3/S602
304	DOS	16.5–A.0	004	CKH			30.00					0.12			3/S602
305	DOS	17.5–A.0	004	CKH			20.00					0.12			3/S602
306	DOS	17.5–A.0	004	CKH			20.00					0.12			3/S602
307	DOS	17.8–A.0	002	DEL			4.00	4.00	0.67	2.67	FT²				1/S602
308	DOS	26.7–A.0	004	CKH			11.00					0.06			3/S602
309	DOS	26.7–A.0	004	CKH			11.00					0.06			3/S602
310	DOS	28.6–A.0	003	DEL			10.00	10.00	0.50	5.00	FT²				1/S602
311	DPS	31.2–A.2	004	%BK						100.00	%				NO REPAIR
312	DPS	01.3–A.1	002	DEL			4.33			5.78	FT²				NO REPAIR
313	DPS	01.3–C.2	004	%BK			5.00			100.00	%			5	1/S503
314	DPS	01.3–D.0	003	OCS			5.00			11.67	FT²		5		1/S503
315	DPS	01.7–A.0	003	OCS			4.33			5.06	FT²		3	2	NO REPAIR
316	DPS	01.7–D.8	002	DEL			4.00			8.00	FT²				NO REPAIR
317	DPS	02.3–A.0	002	DEL			4.00			3.33	FT²				NO REPAIR
318	DPS	02.5–D.8	003	DEL			5.17			10.33	FT²				NO REPAIR
319	DPS	02.7–A.0	002	CKH			4.17					0.12			NO REPAIR
320	DPS	02.7–D.7	002	DEL			4.75			5.54	FT²				NO REPAIR
321	DPS	02.7–D.8	002	DEL			4.75			12.67	FT²				NO REPAIR
322	DPS	03.2–D.8	002	DEL			5.00			13.33	FT²				NO REPAIR

REPAIR SCHEDULE NOTES:

1. REPAIR SCHEDULE IS BASED ON 2010 INSPECTION REPORT BY HALCROW, INC..
2. UNDERWATER AND SURFACE INSPECTION OF ENTIRE PIER MUST BE PERFORMED PRIOR TO REPAIR CONSTRUCTION TO VERIFY TYPE, LOCATION, AND NUMBER OF DEFECTS, SEE GENERAL NOTES ON SHEET S001.
3. ASSET NAME DESIGNATIONS ARE AS FOLLOWS:
   BES = EDGE BEAM
   CBS = BENT CAP
   CDS = DECK CURB
   CDU = ON DECK COVER
   DOS = OVERLAY DECK
   DPS = PRESTRESS PLANK DECK
   ENC = ENCASEMENT PILE
   FBF = BERTHING FRAMING
   SCF = WALL SKIRT
   SFF = FASTENER SKIRT
   VCU = VAULT COVER
3. CRITICAL FACTOR DESIGNATION ARE AS FOLLOWS:
   002 = MODERATE
   003 = MAJOR
   004 = SEVERE
4. DEFECT TYPE DESIGNATIONS ARE AS FOLLOWS:
   CKH = CRACK, HORIZONTAL
   CKM = CRACK, MAP
   CKV = CRACK, VERTICAL
   DEL = DELAMINATED AREA
   ERS = EROSION
   HCM = HONEY COMBING
   OCS = SPALL
   VOD = VOID
   %BK = % BROKEN
   %SL = % SECTION LOSS
5. SEE S500 AND S600 SHEET SERIES FOR REPAIR DETAILS.
6. FOR BIDDING PURPOSES AND PLANNING, ASSUME EACH REPAIR TO BE 20% LARGER IN LENGTH, WIDTH, AND DEPTH THAN WHAT IS SHOWN IN THE REPAIR SCHEDULE.
7. PRECAST CONCRETE PLANKS (DPS) IN SCHEDULE THAT ARE MARKED AS "NO REPAIR" ARE IN NEED OF REPLACEMENT BUT SHALL NOT BE REPLACED DUE TO PROJECT BUDGET CONSTRAINTS.

SYM	DESCRIPTION	DATE	APPR
---	---	---	---

NAVFAC

SEAL

A/E INFO

APPROVED

FOR COMMANDER NAVFAC / B.L.T.L.

ACTIVITY

SATISFACTORY TO USE

DES DAS | DRW DAS | CHK KW

PROJECT MANAGER H. KING

IPT TECH. BRANCH HEAD S. ZAVOYSKI

CHIEF ENG/ARCH (CORE) KW

DEPARTMENT OF THE NAVY
NAVAL FACILITIES ENGINEERING COMMAND
IPT SOUTH ATLANTIC
AUTEC SITE 1

NAVAL FACILITIES ENGINEERING COMMAND
NAVAL FACILITIES ENGINEERING COMMAND SOUTHEAST
NAVAL AIR STATION JACKSONVILLE
ANDROS ISLAND, BAHAMAS

PIER 1902 REPAIRS

REPAIR SCHEDULE

SCALE: SCALE

EPROJECT NO.: 1302903

CONSTR. CONTR. NO. N69450–XX–C–XXXX

NAVFAC DRAWING NO. 15079059

SHEET 34 OF 56

S304

DRAWFORM REVISION: 7 AUGUST 2009

FILE NAME: P:\CBL\project_files\FLORIDA\nas key west ff\jh00213\autec per repairs-1302903\working technical files\Dwgs\Sheet Files\3 - SITRU1902-S-304.dwg LAYOUT NAME: 1902-S-304 PLOTTED: Thursday, February 19, 2015 - 3:42pm USER: douglas.szilagyi

SHEET FORMAT IS 22" X 34". IF PRINTED SHEET IS NOT 22" X 34", THEN IT IS NOT TO SCALE

MARK	ASSET NAME	LOCATION	CRITICALITY	DEFECT TYPE	BEAM		LENGTH	DECK		AREA IN FT² OR %		CRACK		NUMBER OF EXPOSED BARS	REPAIR DETAILS
					H (IN)	V (IN)	(FT)	X (FT)	Y (FT)			WIDTH (IN)	DEPTH (IN)		
323	DPS	03.7–E.0	002	DEL			5.00			5.00	FT²				NO REPAIR
324	DPS	04.7–A.1	002	DEL			4.00			6.67	FT²				NO REPAIR
325	DPS	04.8–D.8	002	DEL			4.33			11.56	FT²				NO REPAIR
326	DPS	04.8–D.8	003	OCS			3.50			1.46	FT²		4	1	NO REPAIR
327	DPS	05.3–A.1	002	DEL			4.17			4.86	FT²				NO REPAIR
328	DPS	05.3–D.8	002	DEL			4.33			11.56	FT²				NO REPAIR
329	DPS	05.7–A.1	002	DEL			4.17			4.86	FT²				NO REPAIR
330	DPS	05.8–D.8	002	DEL			4.33			11.56	FT²				NO REPAIR
331	DPS	06.3–D.7	002	DEL			4.33			4.33	FT²				NO REPAIR
332	DPS	06.3–D.8	002	DEL			3.50			7.00	FT²				NO REPAIR
333	DPS	06.7–D.8	002	DEL			4.33			11.56	FT²				NO REPAIR
334	DPS	07.3–A.1	002	CKH			3.33					0.03			NO REPAIR
335	DPS	07.3–D.8	002	DEL			4.33			11.56	FT²				NO REPAIR
336	DPS	07.8–D.8	002	DEL			4.17			11.11	FT²				NO REPAIR
337	DPS	08.3–D.7	002	DEL			4.33			11.56	FT²				NO REPAIR
338	DPS	08.3–D.8	002	DEL			4.33			11.56	FT²				NO REPAIR
339	DPS	08.8–A.1	002	DEL			4.17			6.25	FT²				NO REPAIR
340	DPS	08.8–D.8	002	DEL			4.33			11.56	FT²				NO REPAIR
341	DPS	08.8–D.8	003	OCS			4.33			15.17	FT²		4	2	NO REPAIR
342	DPS	09.2–D.8	002	DEL			4.33			11.56	FT²				NO REPAIR
343	DPS	09.7–C.7	002	CKH			4.33					0.06			1/S505
344	DPS	09.8–D.8	002	DEL			2.67			11.56	FT²				NO REPAIR
345	DPS	10.3–D.7	002	DEL			4.33			2.17	FT²				NO REPAIR
346	DPS	10.3–D.8	002	DEL			2.67			11.56	FT²				NO REPAIR
347	DPS	10.7–D.8	002	DEL			4.33			11.56	FT²				NO REPAIR
348	DPS	11.1–A.1	002	DEL			4.17			6.94	FT²				NO REPAIR
349	DPS	11.2–D.8	002	DEL			4.33			11.56	FT²				NO REPAIR
350	DPS	11.7–D.8	003	OCS			4.33			8.67	FT²		3	4	NO REPAIR
351	DPS	12.0–A.0	002	OCS			0.58			0.34	FT²		3		NO REPAIR
352	DPS	12.2–D.8	002	DEL			4.33			11.56	FT²				NO REPAIR
353	DPS	12.7–D.8	002	DEL			4.33			11.56	FT²				NO REPAIR
354	DPS	13.3–A.1	002	OCS			2.50			1.04	FT²		3		NO REPAIR
355	DPS	13.3–D.8	002	DEL			4.33			13.00	FT²				NO REPAIR
356	DPS	13.7–D.7	002	DEL			4.33			2.89	FT²				NO REPAIR
357	DPS	13.7–D.8	002	DEL			4.33			11.56	FT²				NO REPAIR
358	DPS	13.8–D.8	004	OCS			2.00			50.00	FT²			3	NO REPAIR
359	DPS	14.3–D.8	002	DEL			4.33			11.56	FT²				NO REPAIR
360	DPS	14.7–D.7	002	DEL			4.33			2.17	FT²				NO REPAIR
361	DPS	14.7–D.8	002	DEL			4.33			11.56	FT²				NO REPAIR
362	DPS	15.2–A.2	002	DEL			4.33			11.56	FT²				NO REPAIR
363	DPS	15.3–D.7	002	DEL			4.33			3.61	FT²				NO REPAIR
364	DPS	15.3–D.8	002	DEL			4.33			11.56	FT²				NO REPAIR
365	DPS	16.2–A.2	002	OCS			4.33			5.06	FT²		2		NO REPAIR
366	DPS	16.3–D.6	004	CKH			5.00					0.50			1/S505
367	DPS	16.7–A.2	002	OCS			4.33			4.33	FT²				NO REPAIR
368	DPS	17.3–D.8	002	CKH			4.00					0.03			NO REPAIR
369	DPS	17.3–D.9	002	CKH			3.00					0.12			NO REPAIR
370	DPS	17.7–A.2	002	CKH			4.33					0.06			NO REPAIR
371	DPS	17.7–D.3	002	CKH			4.00					0.03			1/S505
372	DPS	19.7–D.9	002	DEL			4.00			6.00	FT²				NO REPAIR
373	DPS	20.2–A.2	003	OCS			4.33			11.56	FT²		3	15	NO REPAIR
374	DPS	20.7–A.2	002	DEL			4.33			11.56	FT²				NO REPAIR
375	DPS	21.7–A.2	002	DEL			4.33			5.06	FT²				NO REPAIR
376	DPS	22.2–A.2	003	OCS			4.33			11.56	FT²		3	7	NO REPAIR
377	DPS	22.3–D.9	002	CKH			5.00					0.12			NO REPAIR
378	DPS	22.7–D.9	002	CKH			4.00					0.06			NO REPAIR
379	DPS	22.9–D.9	002	CKH			4.00					0.06			NO REPAIR
380	DPS	23.2–A.2	002	DEL			4.33			11.56	FT²				NO REPAIR
381	DPS	23.3–D.9	004	%BK						100.00	%				NO REPAIR
382	DPS	23.7–A.2	003	OCS			4.33			8.67	FT²		2	1	NO REPAIR
383	DPS	24.2–A.2	002	DEL			4.33			11.56	FT²				NO REPAIR
384	DPS	24.7–A.2	002	DEL			4.33			11.56	FT²				NO REPAIR
385	DPS	25.2–A.2	003	OCS			4.33			11.56	FT²		3	8	NO REPAIR
386	DPS	25.7–A.2	002	DEL			4.33			11.56	FT²				NO REPAIR
387	DPS	26.2–A.2	002	DEL			4.33			11.56	FT²				NO REPAIR
388	DPS	26.4–D.9	003	OCS			2.50			4.17	FT²		3	3	NO REPAIR
389	DPS	26.7–A.2	002	DEL			4.33			11.56	FT²				NO REPAIR
390	DPS	26.7–D.9	002	DEL			4.00			6.00	FT²				NO REPAIR
391	DPS	27.3–D.9	002	CKH			3.50					0.12			NO REPAIR
392	DPS	27.7–A.2	002	DEL			4.33			8.67	FT²				NO REPAIR
393	DPS	29.7–A.2	002	DEL			4.33			11.56	FT²				NO REPAIR
394	DPS	30.2–A.2	003	OCS			4.33			11.56	FT²		4	17	NO REPAIR
395	DPS	30.7–A.2	002	DEL			4.33			11.56	FT²				NO REPAIR
396	DPS	30.7–D.9	002	DEL			4.00			4.00	FT²				NO REPAIR
397	DPS	31.3–D.2	003	CKH			3.50					0.25			1/S505
398	DPS	31.7–D.3	004	%BK						100.00	%				1/S505
399	DPS	31.7–D.9	004	%BK						100.00	%				NO REPAIR
400	DPS	32.2–A.2	002	DEL			4.33			11.56	FT²				NO REPAIR
401	DPS	32.6–B.0	002	CKH			2.67					0.12			1/S505
402	DPS	32.6–D.5	002	CKH			3.50					0.12			1/S505
403	DPS	32.6–D.8	002	CKH			3.00					0.12			NO REPAIR

REPAIR SCHEDULE NOTES:

1. REPAIR SCHEDULE IS BASED ON 2010 INSPECTION REPORT BY HALCROW, INC..
2. UNDERWATER AND SURFACE INSPECTION OF ENTIRE PIER MUST BE PERFORMED PRIOR TO REPAIR CONSTRUCTION TO VERIFY TYPE, LOCATION, AND NUMBER OF DEFECTS, SEE GENERAL NOTES ON SHEET S001.
3. ASSET NAME DESIGNATIONS ARE AS FOLLOWS:
   BES = EDGE BEAM
   CBS = BENT CAP
   CDS = DECK CURB
   CDU = ON DECK COVER
   DOS = OVERLAY DECK
   DPS = PRESTRESS PLANK DECK
   ENC = ENCASEMENT PILE
   FBF = BERTHING FRAMING
   SCF = WALL SKIRT
   SFF = FASTENER SKIRT
   VCU = VAULT COVER
3. CRITICAL FACTOR DESIGNATION ARE AS FOLLOWS:
   002 = MODERATE
   003 = MAJOR
   004 = SEVERE
4. DEFECT TYPE DESIGNATIONS ARE AS FOLLOWS:
   CKH = CRACK, HORIZONTAL
   CKM = CRACK, MAP
   CKV = CRACK, VERTICAL
   DEL = DELAMINATED AREA
   ERS = EROSION
   HCM = HONEY COMBING
   OCS = SPALL
   VOD = VOID
   %BK = % BROKEN
   %SL = % SECTION LOSS
5. SEE S500 AND S600 SHEET SERIES FOR REPAIR DETAILS.
6. FOR BIDDING PURPOSES AND PLANNING, ASSUME EACH REPAIR TO BE 20% LARGER IN LENGTH, WIDTH, AND DEPTH THAN WHAT IS SHOWN IN THE REPAIR SCHEDULE.
7. PRECAST CONCRETE PLANKS (DPS) IN SCHEDULE THAT ARE MARKED AS "NO REPAIR" ARE IN NEED OF REPLACEMENT BUT SHALL NOT BE REPLACED DUE TO PROJECT BUDGET CONSTRAINTS.

SYM	DESCRIPTION	DATE	APPR
---	---	---	---

NAVFAC

SEAL

A/E INFO

APPROVED

FOR COMMANDER NAVFAC / B.L.T.L.

ACTIVITY

SATISFACTORY TO USE

DES DAS | DRW DAS | CHK KW

PROJECT MANAGER H. KING

RPT TECH. BRANCH HEAD S. ZAVOYSKI

CHIEF ENG/ARCH (CORE) KW

DEPARTMENT OF THE NAVY
NAVAL FACILITIES ENGINEERING COMMAND
NAVAL FACILITIES ENGINEERING COMMAND SOUTHEAST
NAVAL AIR STATION JACKSONVILLE
RPT SOUTH ATLANTIC
AUTEC SITE 1
ANDROS ISLAND, BAHAMAS

PIER 1902 REPAIRS

REPAIR SCHEDULE

SCALE: SCALE
EPROJECT NO.: 1302903
CONSTR. CONTR. NO. N69450–XX–C–XXXX
NAVFAC DRAWING NO. 15079060
SHEET 35 OF 56

S305

DRAWFORM REVISION: 7 AUGUST 2009

FILE NAME: P:\CBL\project_files\FLORIDA\nas key west 11\hi00213\autec per repairs-1302903\working technical files\Dwgs\Sheet Files\3 - SITRU1902-S-305.dwg LAYOUT NAME: 1902-S-305 PLOTTED: Thursday, February 19, 2015 - 3:43pm USER: douglas.szilagyi

SHEET FORMAT IS 22" X 34". IF PRINTED SHEET IS NOT 22" X 34", THEN IT IS NOT TO SCALE

MARK	ASSET NAME	LOCATION	CRITICALITY	DEFECT TYPE	BEAM		LENGTH	DECK		AREA IN FT² OR %		CRACK		NUMBER OF EXPOSED BARS	REPAIR DETAILS
					H (IN)	V (IN)	(FT)	X (FT)	Y (FT)			WIDTH (IN)	DEPTH (IN)		
404	DPS	32.7–B.8	003	CKH			6.00					0.06			1/S505
405	DPS	32.7–C.6	004	CKH			6.00					0.50			1/S505
406	DPS	32.7–C.8	003	DEL			6.00			15.00	FT²				1/S505
407	DPS	32.7–D.0	003	DEL			6.00			12.00	FT²				1/S505
408	CDS	01.4–E.0	004	DEL		8	12.50			8.33	FT²				1/S602
409	CDS	01.5–A.0	003	DEL		8	10.00			6.67	FT²				1/S602
410	CDS	02.4–E.0	003	OCS		9	7.67			5.75	FT²		2		1/S602
411	CDS	03.4–E.0	004	OCS		5	10.83			4.51	FT²		3		1/S602
412	CDS	03.7–A.0	002	DEL	10		4.00			3.33	FT²				1/S602
413	CDS	03.9–A.0	003	DEL		15	6.00			7.50	FT²				1/S602
414	CDS	04.2–A.0	003	DEL		15	6.00			7.50	FT²				1/S602
415	CDS	04.5–A.0	003	DEL		15	6.00			7.50	FT²				1/S602
416	CDS	04.6–E.0	003	DEL		7	7.25			4.23	FT²				1/S602
417	CDS	05.0–E.0	003	DEL		7	6.50			3.79	FT²				1/S602
418	CDS	05.0–E.0	002	DEL		14	3.42			3.99	FT²				1/S602
419	CDS	06.0–A.0	004	CKH			22.00					0.12			3/S602
420	CDS	06.8–E.0	003	DEL		21	6.50			11.38	FT²				1/S602
421	CDS	07.0–A.0	002	CKH			4.50					0.06			3/S602
422	CDS	07.0–A.0	002	OCS		6	4.00			2.00	FT²		3		1/S602
423	CDS	07.1–A.0	002	CKH			3.00					0.12			3/S602
424	CDS	07.1–A.0	002	CKH			3.00					0.12			3/S602
425	CDS	07.1–A.0	002	CKH			3.00					0.12			3/S602
426	CDS	08.8–A.0	003	CKH			6.00					0.12			3/S602
427	CDS	08.9–A.0	002	CKH			2.00					0.12			3/S602
428	CDS	09.0–A.0	004	CKH			17.00					0.06			3/S602
429	CDS	09.0–A.0	003	DEL		24	6.00			12.00	FT²				1/S602
430	CDS	09.1–A.0	002	CKH			2.08					0.12			3/S602
431	CDS	09.2–A.0	003	CKH			9.83					0.06			3/S602
432	CDS	10.4–A.0	003	OCS		8	1.50			1.00	FT²		3	1	1/S602
433	CDS	10.8–A.0	002	CKH			5.00					0.06			3/S602
434	CDS	10.8–A.0	002	CKH			5.00					0.06			3/S602
435	CDS	10.8–A.0	002	CKH			4.00					0.06			3/S602
436	CDS	11.1–A.0	004	CKH			12.00					0.06			3/S602
437	CDS	11.1–A.0	002	CKH			4.00					0.06			3/S602
438	CDS	11.2–A.0	002	CKH			5.00					0.06			3/S602
439	CDS	11.9–A.0	002	OCS		7	5.00			2.92	FT²		2		2/S602
440	CDS	12.4–A.0	003	CKH			6.67					0.06			3/S602
441	CDS	12.5–A.0	002	DEL		12	3.50			3.50	FT²				1/S602
442	CDS	12.8–A.0	004	CKH			11.67					0.06			3/S602
443	CDS	12.8–A.0	003	DEL		26	8.08			17.51	FT²				1/S602
444	CDS	12.9–A.0	002	CKH			3.67					0.06			3/S602
445	CDS	13.1–A.0	002	CKH			2.50					0.12			3/S602
446	CDS	15.1–A.0	002	CKH			1.50					0.12			3/S602
447	CDS	15.1–A.0	002	CKH			1.50					0.12			3/S602
448	CDS	16.0–A.0	003	OCS		7	3.25			1.90	FT²		2	2	1/S602
449	CDS	16.3–A.0	002	CKH			2.08					0.12			3/S602
450	CDS	16.7–A.0	002	CKH			5.00					0.06			3/S602
451	CDS	16.7–A.0	003	CKH			9.00					0.12			3/S602
452	CDS	16.7–A.0	003	CKH			9.00					0.12			3/S602
453	CDS	16.9–A.0	003	OCS		14	2.00			2.33	FT²		3	2	1/S602
454	CDS	17.1–A.0	002	CKH			2.00					0.12			3/S602
455	CDS	17.4–A.0	003	CKH			6.50					0.06			3/S602
456	CDS	17.4–A.0	003	CKH			7.50					0.06			3/S602
457	CDS	17.4–A.0	003	CKH			10.00					0.12			3/S602
458	CDS	17.8–A.0	003	CKH			10.00					0.12			3/S602
459	CDS	18.3–A.0	003	OCS		7	0.50			0.29	FT²		2	1	1/S602
460	CDS	18.6–A.0	003	OCS		14	3.00			3.50	FT²		5	1	1/S602
461	CDS	19.0–A.0	003	CKH			7.50					0.06			3/S602
462	CDS	20.8–A.0	003	CKH			6.00					0.06			3/S602
463	CDS	20.9–A.0	002	CKH			3.33					0.03			3/S602
464	CDS	21.2–A.0	002	DEL		16	3.50			4.67	FT²				1/S602
465	CDS	21.4–A.0	003	CKH			6.00					0.12			3/S602
466	CDS	22.5–A.0	003	OCS		12	1.25			1.25	FT²		3	1	1/S602
467	CDS	22.8–A.0	002	CKH			2.50					0.12			3/S602
468	CDS	22.8–A.0	002	CKH			2.50					0.12			3/S602
469	CDS	22.9–A.0	003	DEL		21	5.67			9.92	FT²				1/S602
470	CDS	23.0–A.0	002	OCS		4	5.00			1.67	FT²		2		2/S602
471	CDS	23.7–A.0	002	DEL	10		3.33			2.78	FT²				1/S602
472	CDS	24.0–A.0	003	OCS		7	5.00			2.92	FT²		3	5	1/S602
473	CDS	24.4–A.0	003	OCS		2	2.50			0.42	FT²		1	3	1/S602
474	CDS	24.7–A.0	003	CKH			5.83					0.12			3/S602
475	CDS	25.1–A.0	002	CKH			5.00					0.06			3/S602
476	CDS	27.0–A.0	002	DEL		18	4.00			6.00	FT²				1/S602
477	CDS	27.2–A.0	003	OCS		18	1.50			2.25	FT²		4	2	1/S602
478	CDS	27.3–A.0	002	OCS		4	4.00			1.33	FT²		2		2/S602
479	CDS	27.4–A.0	002	CKH			4.00					0.12			3/S602
480	CDS	28.9–A.0	003	CKH			3.67					0.18			3/S602
481	CDS	29.1–A.0	002	CKH			2.50					0.12			3/S602
482	CDS	29.1–A.0	003	OCS		7	1.25			0.73	FT²		3	1	1/S602
483	CDS	29.5–A.0	003	DEL	9		6.00			4.50	FT²				1/S602
484	CDS	30.3–A.0	003	DEL		18	7.00			10.50	FT²				1/S602

REPAIR SCHEDULE NOTES:

1. REPAIR SCHEDULE IS BASED ON 2010 INSPECTION REPORT BY HALCROW, INC..
2. UNDERWATER AND SURFACE INSPECTION OF ENTIRE PIER MUST BE PERFORMED PRIOR TO REPAIR CONSTRUCTION TO VERIFY TYPE, LOCATION, AND NUMBER OF DEFECTS, SEE GENERAL NOTES ON SHEET S001.
3. ASSET NAME DESIGNATIONS ARE AS FOLLOWS:
   BES = EDGE BEAM
   CBS = BENT CAP
   CDS = DECK CURB
   CDU = ON DECK COVER
   DOS = OVERLAY DECK
   DPS = PRESTRESS PLANK DECK
   ENC = ENCASEMENT PILE
   FBF = BERTHING FRAMING
   SCF = WALL SKIRT
   SFF = FASTENER SKIRT
   VCU = VAULT COVER
3. CRITICAL FACTOR DESIGNATION ARE AS FOLLOWS:
   002 = MODERATE
   003 = MAJOR
   004 = SEVERE
4. DEFECT TYPE DESIGNATIONS ARE AS FOLLOWS:
   CKH = CRACK, HORIZONTAL
   CKM = CRACK, MAP
   CKV = CRACK, VERTICAL
   DEL = DELAMINATED AREA
   ERS = EROSION
   HCM = HONEY COMBING
   OCS = SPALL
   VOD = VOID
   %BK = % BROKEN
   %SL = % SECTION LOSS
5. SEE S500 AND S600 SHEET SERIES FOR REPAIR DETAILS.
6. FOR BIDDING PURPOSES AND PLANNING, ASSUME EACH REPAIR TO BE 20% LARGER IN LENGTH, WIDTH, AND DEPTH THAN WHAT IS SHOWN IN THE REPAIR SCHEDULE.

SYM	DESCRIPTION	DATE	APPR
---	---	---	---

SEAL

A/E INFO

APPROVED

FOR COMMANDER NAVFAC / B.L.T.L.

ACTIVITY

SATISFACTORY TO USE

DES DAS | DRW DAS | CHK KW

PROJECT MANAGER H. KING

IPT TECH. BRANCH HEAD S. ZAVOYSKI

CHIEF ENG/ARCH (CORE) KW

DEPARTMENT OF THE NAVY
NAVAL FACILITIES ENGINEERING COMMAND
IPT SOUTH ATLANTIC
AUTEC SITE 1

NAVAL FACILITIES ENGINEERING COMMAND
NAVAL FACILITIES ENGINEERING COMMAND SOUTHEAST
NAVAL AIR STATION JACKSONVILLE
ANDROS ISLAND, BAHAMAS

PIER 1902 REPAIRS

REPAIR SCHEDULE

SCALE: SCALE
EPROJECT NO.: 1302903
CONSTR. CONTR. NO. N69450–XX–C–XXXX
NAVFAC DRAWING NO. 15079061
SHEET 36 OF 56

S306

DRAWFORM REVISION: 7 AUGUST 2009

FILE NAME: P:\CBL\project_files\FLORIDA\nas key west ff\fh00213\autec per repairs-1302903\working technical files\Dwgs\Sheet Files\3 – SITRU1902-S-306.dwg LAYOUT NAME: 1902-S-306 PLOTTED: Thursday, February 19, 2015 – 3:43pm USER: douglas.szilagyi

SHEET FORMAT IS 22" X 34". IF PRINTED SHEET IS NOT 22" X 34", THEN IT IS NOT TO SCALE

MARK	ASSET NAME	LOCATION	CRITICALITY	DEFECT TYPE	BEAM		LENGTH	DECK		AREA IN FT² OR %		CRACK		NUMBER OF EXPOSED BARS	REPAIR DETAILS
					H (IN)	V (IN)	(FT)	X (FT)	Y (FT)			WIDTH (IN)	DEPTH (IN)		
485	CDS	30.3–A.0	003	DEL	9		6.00			4.50	FT²				1/S602
486	CDS	30.6–A.0	003	DEL	9		6.00			4.50	FT²				1/S602
487	CDS	30.9–A.0	004	DEL			1.67						0		1/S602
488	CDS	31.2–A.0	003	DEL		12	7.00			7.00	FT²				1/S602
489	CDS	31.3–A.0	003	CKH			6.92					0.12			3/S602
490	CDS	32.6–A.0	003	DEL	12		6.00			6.00	FT²				1/S602
491	CDS	33.0–A.0	002	DEL		12	4.33			4.33	FT²				1/S602
492	CDS	33.0–A.0	002	DEL		22	3.50			6.42	FT²				1/S602
493	CDS	33.0–B.5	003	OCS	4		0.33			0.11	FT²		2	1	1/S602
494	CDS	33.0–B.5	003	OCS	4		0.33			0.11	FT²		2	1	1/S602
495	CDS	33.0–C.1	003	OCS		11	1.00			0.92	FT²		4	1	1/S602
496	CDS	33.0–C.3	002	OCS		6	1.00			0.50	FT²		3		1/S602
497	CDS	33.0–D.5	003	DEL	10		6.00			5.00	FT²				3/S602
498	CDS	03.0–A.0	003	OCS		7	5.33			3.11	FT²		1		2/S602
499	CDS	15.0–A.0	003	DEL		18	9.17			13.75	FT²				3/S602
500	CDS	19.0–A.0	002	DEL		20	4.17			6.94	FT²				3/S602
501	CDS	30.7–A.0	003	DEL		20	7.00			11.67	FT²				3/S602
502	FBF	33.0–A.0	004	%BK						100.00	%				7/S505
503	FBF	33.0–A.5	004	%BK						100.00	%				7/S505
504	FBF	33.0–A.5	004	%SL			11.00			100.00	%				7/S505
505	FBF	33.0–B.0	004	%BK						100.00	%				7/S505
506	FBF	33.0–B.5	004	%BK						100.00	%				7/S505
507	FBF	33.0–B.5	004	%BK			11.00			100.00	%				7/S505
508	FBF	33.0–C.0	004	%BK						100.00	%				7/S505
509	FBF	33.0–C.5	004	%BK						100.00	%				7/S505
510	FBF	33.0–C.5	004	%BK			11.00			100.00	%				7/S505
511	FBF	33.0–D.0	004	%BK						100.00	%				7/S505
512	FBF	33.0–D.5	004	%BK						100.00	%				7/S505
513	FBF	33.0–D.5	004	%BK			11.00			100.00	%				7/S505
514	FBF	33.0–E.0	004	%BK						100.00	%				7/S505
515	SFF	04.5–E.0	004	%SL			15.00			60.00	%				5 & 6/S504
516	SFF	05.5–E.0	004	%SL			15.00			60.00	%				5 & 6/S504
517	SFF	10.5–A.0	004	%SL			15.00			70.00	%				5 & 6/S504
518	SFF	11.5–A.0	004	%SL			15.00			70.00	%				5 & 6/S504
519	SFF	12.5–A.0	004	%SL			15.00			70.00	%				5 & 6/S504
520	SFF	13.5–A.0	004	%SL			15.00			70.00	%				5 & 6/S504
521	SCF	14.5–A.0	003	OCS			1.17			1.17	FT²		4		2/S602
522	SFF	14.5–A.0	004	%SL			15.00			70.00	%				5 & 6/S504
523	SFF	15.5–A.0	004	%SL			15.00			70.00	%				5 & 6/S504
524	SFF	16.5–A.0	004	%SL			15.00			70.00	%				5 & 6/S504
525	SFF	16.5–A.0	004	%SL			15.00			70.00	%				5 & 6/S504
526	SFF	17.3–A.0	004	%SL			10.00			70.00	%				5 & 6/S504
527	SFF	17.6–A.0	004	%SL			5.00			25.00	%				5 & 6/S504
528	SFF	18.5–A.0	004	%SL			15.00			70.00	%				5 & 6/S504
529	SFF	19.5–A.0	004	%SL			15.00			70.00	%				5 & 6/S504
530	SFF	20.5–A.0	004	%SL			3.00			60.00	%				5 & 6/S504
531	SFF	20.5–A.0	004	%SL			15.00			70.00	%				5 & 6/S504
532	SFF	21.5–A.0	004	%SL			4.00			60.00	%				5 & 6/S504
533	SFF	21.5–A.0	004	%SL			15.00			70.00	%				5 & 6/S504
534	SFF	22.5–A.0	004	%SL			15.00			70.00	%				5 & 6/S504
535	SFF	22.7–A.0	004	%SL			4.67			60.00	%				5 & 6/S504
536	SFF	23.5–A.0	004	%SL			15.00			60.00	%				5 & 6/S504
537	SFF	23.5–A.0	004	%SL			15.00			70.00	%				5 & 6/S504
538	SFF	23.5–A.0	004	%SL			15.00			70.00	%				5 & 6/S504
539	SFF	24.5–A.0	004	%SL			1.00			60.00	%				5 & 6/S504
540	SFF	24.5–A.0	004	%SL			15.00			70.00	%				5 & 6/S504
541	SFF	25.5–A.0	004	%SL			4.00			60.00	%				5 & 6/S504
542	SFF	25.5–A.0	004	%SL			15.00			70.00	%				5 & 6/S504
543	SFF	26.5–A.0	004	%SL			3.00			60.00	%				5 & 6/S504
544	SFF	26.5–A.0	004	%SL			15.00			70.00	%				5 & 6/S504
545	SFF	27.5–A.0	004	%SL			13.00			60.00	%				5 & 6/S504
546	SFF	27.5–A.0	004	%SL			15.00			70.00	%				5 & 6/S504
547	SFF	28.5–A.0	004	%SL			5.00			60.00	%				5 & 6/S504
548	SFF	28.5–A.0	004	%SL			5.00			60.00	%				5 & 6/S504
549	SFF	28.5–A.0	004	%SL			5.00			60.00	%				5 & 6/S504
550	SFF	28.5–A.0	004	%SL			15.00			70.00	%				5 & 6/S504
551	SCF	28.9–A.0	003	OCS			1.67			1.11	FT²		4		2/S602
552	SFF	29.5–A.0	004	%SL			5.00			60.00	%				5 & 6/S504
553	SFF	29.5–A.0	004	%SL			5.00			60.00	%				5 & 6/S504
554	SFF	29.5–A.0	004	%SL			15.00			70.00	%				5 & 6/S504
555	SFF	30.5–A.0	004	%SL			5.00			60.00	%				5 & 6/S504
556	SFF	30.5–A.0	004	%SL			5.00			60.00	%				5 & 6/S504
557	SFF	30.5–A.0	004	%SL			5.00			60.00	%				5 & 6/S504
558	SFF	30.5–A.0	004	%SL			15.00			70.00	%				5 & 6/S504
559	SCF	30.9–A.0	002	OCS			0.83			0.42	FT²		3		2/S602
560	SFF	31.5–A.0	004	%SL			5.00			60.00	%				5 & 6/S504
561	SFF	31.5–A.0	004	%SL			5.00			60.00	%				5 & 6/S504
562	SFF	31.5–A.0	004	%SL			5.00			60.00	%				5 & 6/S504
563	SFF	31.5–A.0	004	%SL			15.00			70.00	%				5 & 6/S504
564	SCF	32.1–E.0	002	CKV			5.00					0.03			5 & 6/S504
565	SFF	32.5–A.0	004	%SL			5.00			60.00	%				5 & 6/S504

REPAIR SCHEDULE NOTES:

1. REPAIR SCHEDULE IS BASED ON 2010 INSPECTION REPORT BY HALCROW, INC..
2. UNDERWATER AND SURFACE INSPECTION OF ENTIRE PIER MUST BE PERFORMED PRIOR TO REPAIR CONSTRUCTION TO VERIFY TYPE, LOCATION, AND NUMBER OF DEFECTS, SEE GENERAL NOTES ON SHEET S001.
3. ASSET NAME DESIGNATIONS ARE AS FOLLOWS:
   BES = EDGE BEAM
   CBS = BENT CAP
   CDS = DECK CURB
   CDU = ON DECK COVER
   DOS = OVERLAY DECK
   DPS = PRESTRESS PLANK DECK
   ENC = ENCASEMENT PILE
   FBF = BERTHING FRAMING
   SCF = WALL SKIRT
   SFF = FASTENER SKIRT
   VCU = VAULT COVER
3. CRITICAL FACTOR DESIGNATION ARE AS FOLLOWS:
   002 = MODERATE
   003 = MAJOR
   004 = SEVERE
4. DEFECT TYPE DESIGNATIONS ARE AS FOLLOWS:
   CKH = CRACK, HORIZONTAL
   CKM = CRACK, MAP
   CKV = CRACK, VERTICAL
   DEL = DELAMINATED AREA
   ERS = EROSION
   HCM = HONEY COMBING
   OCS = SPALL
   VOD = VOID
   %BK = % BROKEN
   %SL = % SECTION LOSS
5. SEE S500 AND S600 SHEET SERIES FOR REPAIR DETAILS.
6. FOR BIDDING PURPOSES AND PLANNING, ASSUME EACH REPAIR TO BE 20% LARGER IN LENGTH, WIDTH, AND DEPTH THAN WHAT IS SHOWN IN THE REPAIR SCHEDULE.

SYM	DESCRIPTION	DATE	APPR
---	---	---	---
---	---	---	---
---	---	---	---
---	---	---	---
---	---	---	---
---	---	---	---
---	---	---	---

NAVFAC

SEAL

A/E INFO

APPROVED

FOR COMMANDER NAVFAC / B.L.T.L.

ACTIVITY

SATISFACTORY TO USE

DES DAS DRW DAS CHK KW

PROJECT MANAGER H. KING

IPT TECH. BRANCH HEAD S. ZAVOYSKI

CHIEF ENG/ARCH (CORE) KW

DEPARTMENT OF THE NAVY
NAVAL FACILITIES ENGINEERING COMMAND
IPT SOUTH ATLANTIC
AUTEC SITE 1

NAVAL FACILITIES ENGINEERING COMMAND
NAVAL AIR STATION JACKSONVILLE
SOUTHEAST
ANDROS ISLAND, BAHAMAS

PIER 1902 REPAIRS

REPAIR SCHEDULE

SCALE: SCALE

EPROJECT NO.: 1302903

CONSTR. CONTR. NO. N69450–XX–C–XXXX

NAVFAC DRAWING NO. 15079062

SHEET 37 OF 56

S307

DRAWFORM REVISION: 7 AUGUST 2009

FILE NAME: P:\OBL\project_files\FLORIDA\nas key west ff\hf00213\autec per repairs-1302903\working technical files\Dwgs\Sheet Files\3 – SITRU1902-S-307.dwg LAYOUT NAME: 1902-S-307 PLOTTED: Thursday, February 19, 2015 – 3:44pm USER: douglas.szilagyi

SHEET FORMAT IS 22" X 34". IF PRINTED SHEET IS NOT 22" X 34", THEN IT IS NOT TO SCALE

MARK	ASSET NAME	LOCATION	CRITICALITY	DEFECT TYPE	BEAM		LENGTH	DECK		AREA IN FT^2 OR %		CRACK		NUMBER OF EXPOSED BARS	REPAIR DETAILS
					H (IN)	V (IN)	(FT)	X (FT)	Y (FT)			WIDTH (IN)	DEPTH (IN)		
566	SFF	32.5–A.0	004	%SL			5.00			60.00	%				5 & 6/S504
567	SFF	32.5–A.0	004	%SL			5.00			60.00	%				5 & 6/S504
568	SFF	32.5–A.0	004	%SL			15.00			70.00	%				5 & 6/S504
569	SCF	32.6–E.0	003	CKV			5.00					0.06			5 & 6/S504
570	SFF	6.5–A.0	004	%SL			15.00			70.00	%				5 & 6/S504
571	SFF	7.5–A.0	004	%SL			15.00			70.00	%				5 & 6/S504
572	SFF	8.5–A.0	004	%SL			15.00			70.00	%				5 & 6/S504
573	SFF	9.5–A.0	004	%SL			15.00			70.00	%				5 & 6/S504
574	VCU	21.6–B.3	003	OCS			0.42			0.42	FT^2		1	1	1/S602
575	CDU	10.1–A.0	003	OCS			3.00			1.50	FT^2		3	1	1/S602
576	CDU	10.1–E.0	002	CKM			5.00			12.50	FT^2	0.12			7/S602
577	CDU	13.6–A.0	002	CKM			2.50			6.25	FT^2	0.12			7/S602
578	CDU	13.6–A.0	003	OCS			0.83			0.97	FT^2		3	1	1/S602
579	CDU	14.4–A.0	004	%SL			2.50			70.00	%				2/S602
580	CDU	14.5–A.0	002	OCS			2.25			1.13	FT^2		3		2/S602
581	CDU	14.6–A.0	002	OCS			4.00			2.00	FT^2		3		2/S602
582	CDU	22.4–A.0	003	CKM			6.33			15.83	FT^2	0.03			7/S602
583	CDU	22.4–A.0	003	CKM			7.50			18.75	FT^2	0.06			7/S602
584	CDU	26.0–A.0	003	CKM			8.50			21.25	FT^2	0.06			7/S602
585	CDU	26.0–A.0	003	OCS			5.25			5.69	FT^2		4	3	1/S602
586	CDU	26.4–A.0	004	%SL			1.67			70.00	%				2/S602

REPAIR SCHEDULE NOTES:

1. REPAIR SCHEDULE IS BASED ON 2010 INSPECTION REPORT BY HALCROW, INC..
2. UNDERWATER AND SURFACE INSPECTION OF ENTIRE PIER MUST BE PERFORMED PRIOR TO REPAIR CONSTRUCTION TO VERIFY TYPE, LOCATION, AND NUMBER OF DEFECTS, SEE GENERAL NOTES ON SHEET S001.
3. ASSET NAME DESIGNATIONS ARE AS FOLLOWS:
   BES = EDGE BEAM
   CBS = BENT CAP
   CDS = DECK CURB
   CDU = ON DECK COVER
   DOS = OVERLAY DECK
   DPS = PRESTRESS PLANK DECK
   ENC = ENCASEMENT PILE
   FBF = BERTHING FRAMING
   SCF = WALL SKIRT
   SFF = FASTENER SKIRT
   VCU = VAULT COVER
3. CRITICAL FACTOR DESIGNATION ARE AS FOLLOWS:
   002 = MODERATE
   003 = MAJOR
   004 = SEVERE
4. DEFECT TYPE DESIGNATIONS ARE AS FOLLOWS:
   CKH = CRACK, HORIZONTAL
   CKM = CRACK, MAP
   CKV = CRACK, VERTICAL
   DEL = DELAMINATED AREA
   ERS = EROSION
   HCM = HONEY COMBING
   OCS = SPALL
   VOD = VOID
   %BK = % BROKEN
   %SL = % SECTION LOSS
5. SEE S500 AND S600 SHEET SERIES FOR REPAIR DETAILS.
6. FOR BIDDING PURPOSES AND PLANNING, ASSUME EACH REPAIR TO BE 20% LARGER IN LENGTH, WIDTH, AND DEPTH THAN WHAT IS SHOWN IN THE REPAIR SCHEDULE.

SYM	DESCRIPTION	DATE	APPR
---	---	---	---
---	---	---	---
---	---	---	---
---	---	---	---
---	---	---	---
---	---	---	---
---	---	---	---

SEAL

A/E INFO

APPROVED

FOR COMMANDER NAVFAC / B.I.T.L.

ACTIVITY

SATISFACTORY TO ACT:

DES DAS DRW DAS CHK KW

PROJECT MANAGER H. KING

IPT TECH. BRANCH HEAD S. ZAVOYSKI

CHIEF ENG/ARCH (CORE) KW

DEPARTMENT OF THE NAVY
NAVAL FACILITIES ENGINEERING COMMAND
IPT SOUTH ATLANTIC
NAVAL FACILITIES ENGINEERING COMMAND SOUTHEAST
NAVAL AIR STATION JACKSONVILLE
AUTEC SITE 1
ANDROS ISLAND, BAHAMAS

PIER 1902 REPAIRS

REPAIR SCHEDULE

SCALE: SCALE

EPROJECT NO.: 1302903

CONSTR. CONTR. NO. N69450–XX–C–XXXX

NAVFAC DRAWING NO. 15079063

SHEET 38 OF 56

S308

DRAWFORM REVISION: 7 AUGUST 2009

SHEET FORMAT IS 22" X 34". IF PRINTED SHEET IS NOT 22" X 34", THEN IT IS NOT TO SCALE

FILE NAME: P:\CBL\project_files\FLORIDA\nas key west f(l)h\h00213\autec pier repairs-1302903\working technical files\dwgs\Sheet Files\3 - STRU1902-S-308.dwg LAYOUT NAME: 1902-S-308 PLOTTED: Thursday, February 19, 2015 - 3:45pm USER: douglas.zalhagi

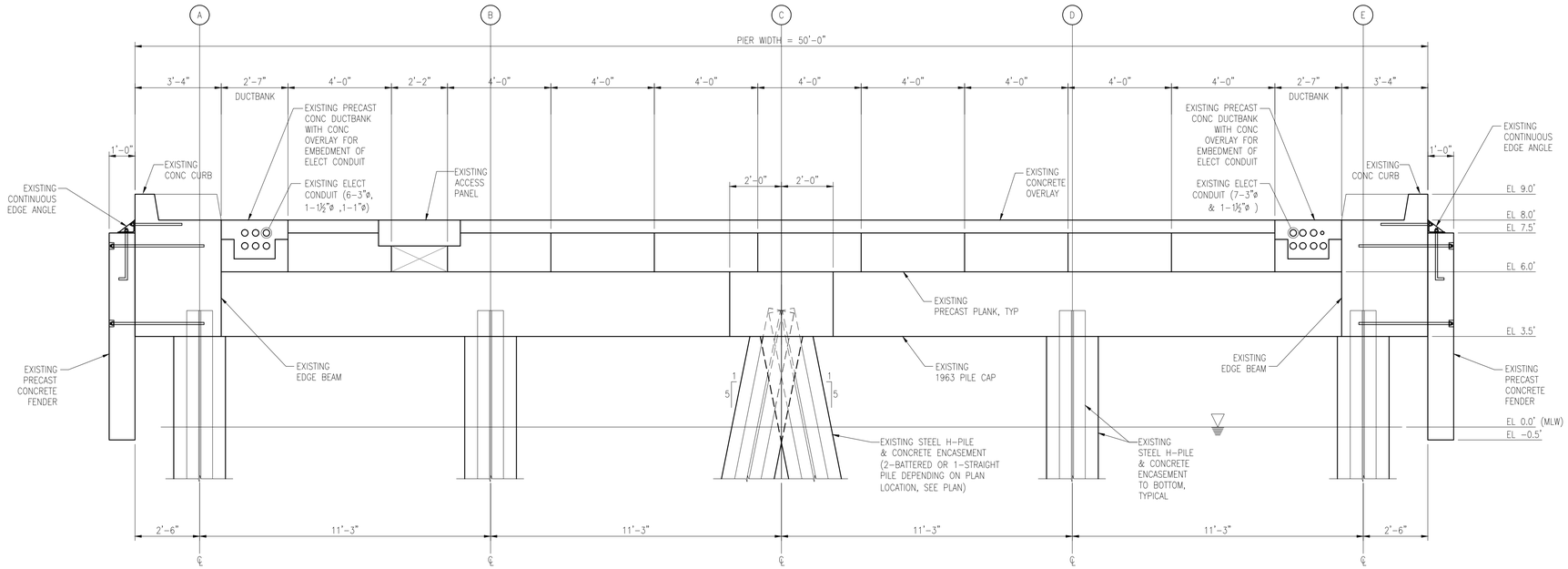

1 EXISTING SECTION AT 1963 PILE CAPS

Scale: 3/8" = 1'-0"

1963 PILE CAP BENT NOTES:

1. INFORMATION SHOWN IS BASED ON DRAWINGS BY THOMAS B. BOURNE ASSOCIATES, INC. DATED MAY 5, 1963 (BUREAU OF YARDS AND DOCKS DRAWINGS 975739 TO 975739) AND DRAWINGS BY NAVFAC SOUTHERN DIVISION DATED NOVEMBER 1, 1982 (NAVFAC DRAWINGS 5099652 TO 5099671 AND 5135711).

2. SEE GENERAL NOTES ON S001 EXISTING MATERIAL STRENGTHS.

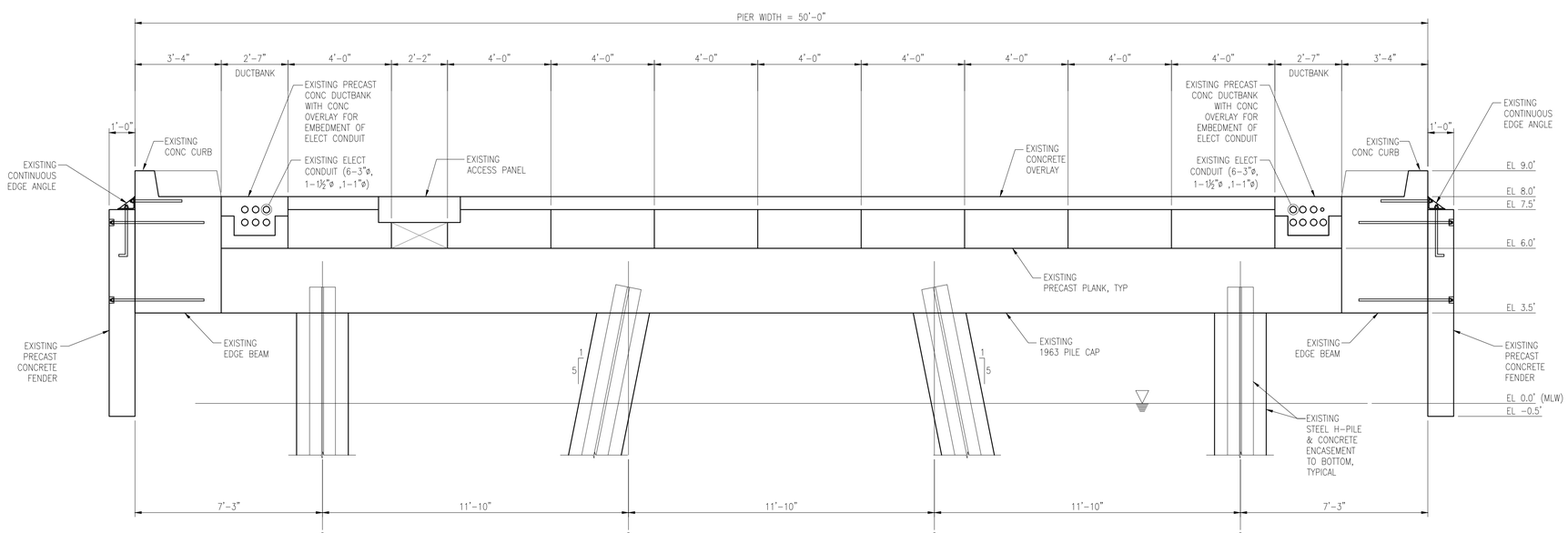

2 EXISTING SECTION AT 1982 PILE CAPS

Scale: 3/8" = 1'-0"

1982 PILE CAP BENT NOTES:

1. INFORMATION SHOWN IS BASED ON DRAWINGS BY NAVFAC SOUTHERN DIVISION DATED NOVEMBER 1, 1982 (NAVFAC DRAWINGS 5099652 TO 5099671 AND 5135711).

2. SEE GENERAL NOTES ON S001 EXISTING MATERIAL STRENGTHS.

SYM	DESCRIPTION	DATE	APPR
---	---	---	---
---	---	---	---
---	---	---	---
---	---	---	---
---	---	---	---
---	---	---	---
---	---	---	---
---	---	---	---

SEAL

A/E INFO

APPROVED

FOR COMMANDER NAVFAC / B.L.T.L.

ACTIVITY

SATISFACTORY TO ENG:

DES DAS DRW DAS CHK KW

PROJECT MANAGER H. KING

IPT TECH. BRANCH HEAD S. ZAVOYSKI

CHIEF ENG/ARCH (CORE) KW

DEPARTMENT OF THE NAVY
NAVAL FACILITIES ENGINEERING COMMAND
IPT SOUTH ATLANTIC
NAVAL FACILITIES ENGINEERING COMMAND SOUTHEAST
NAVAL AIR STATION, JACKSONVILLE
AUTEC SITE 1
ANDROS ISLAND, BAHAMAS

PIER 1902 REPAIRS

EXISTING SECTIONS AND DETAILS

SCALE: SCALE

EPROJECT NO.: 1302903

CONSTR. CONTR. NO. N69450-XX-C-XXXX

NAVFAC DRAWING NO. 15079064

SHEET 39 OF 56

S401

DRAWFORM REVISION: 7 AUGUST 2009

FILE NAME: P:\CBL\project_files\FLORIDA\nas key west f(l)hjh00213\autec pier repairs-1302903\working technical files\dwgs\Sheet Files\3 - STRU1902-S-401.dwg LAYOUT NAME: 1902-S-401 PLOTTED: Thursday, February 19, 2015 - 3:45pm USER: douglas.szilagyi

SHEET FORMAT IS 22" X 34". IF PRINTED SHEET IS NOT 22" X 34", THEN IT IS NOT TO SCALE

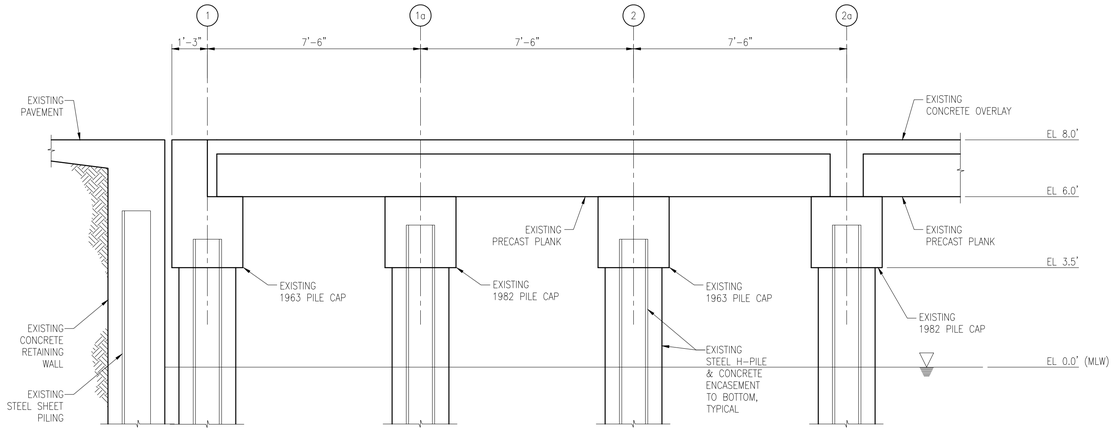

1 EXISTING SECTION AT SHORE END
Scale: 3/8" = 1'-0"

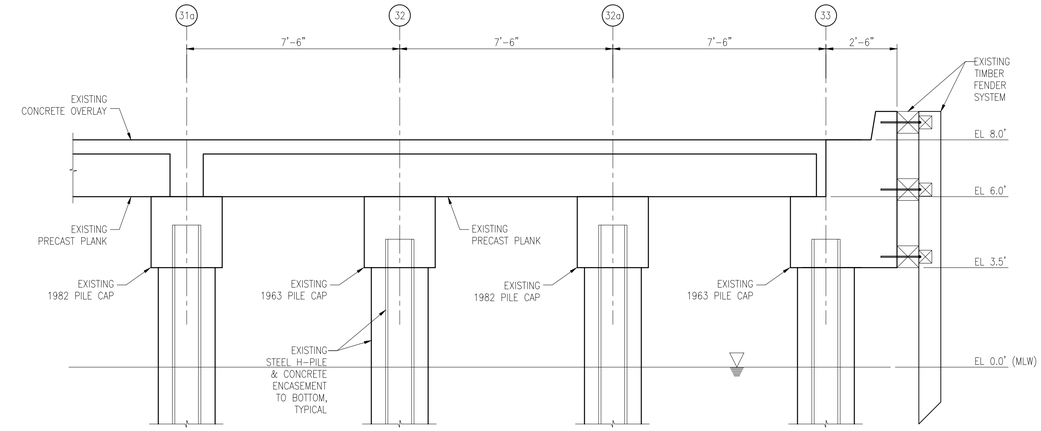

2 EXISTING SECTION AT PIER END
Scale: 3/8" = 1'-0"

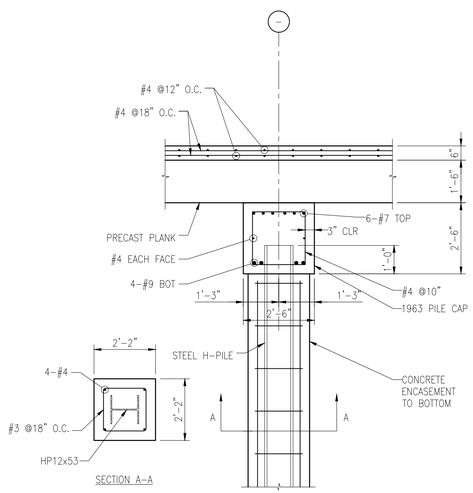

3 EXISTING 1963 PILE CAP
Scale: 3/8" = 1'-0"

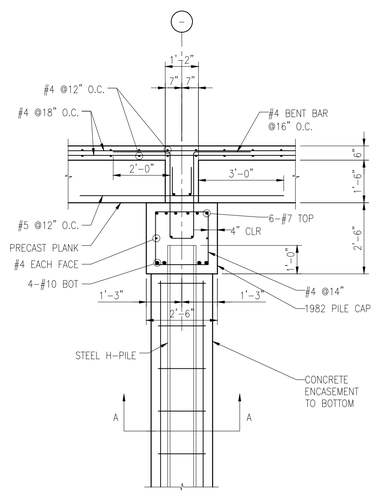

4 EXISTING 1982 PILE CAP
Scale: 3/8" = 1'-0"

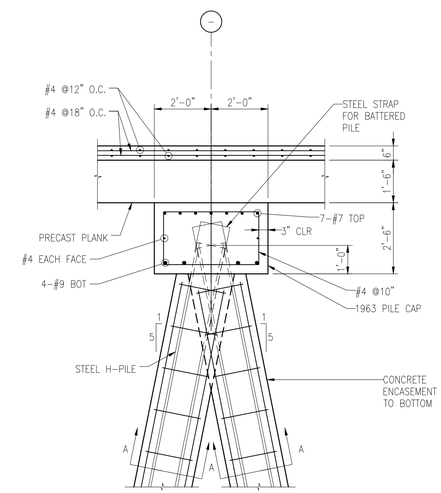

5 EXISTING 1963 PILE CAP – BATTERED
Scale: 3/8" = 1'-0"

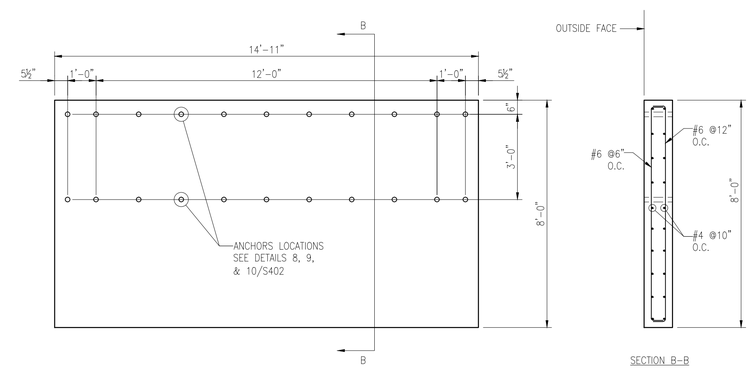

6 EXISTING FENDER PANEL ELEVATION
Scale: 3/8" = 1'-0"

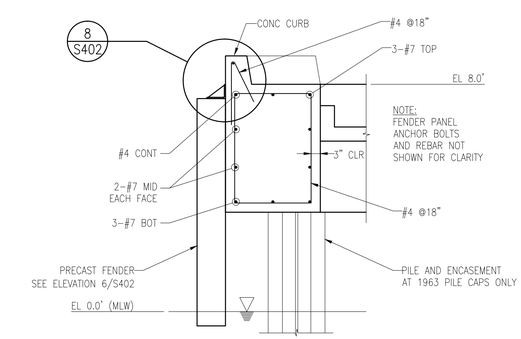

7 EXISTING 1963 EDGE BEAM
Scale: 3/8" = 1'-0"

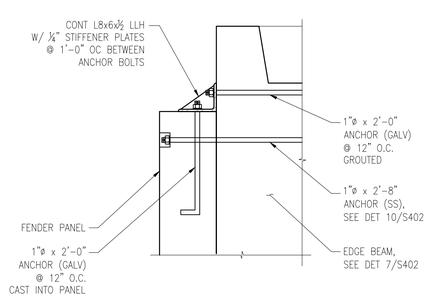

8 EXISTING T/FENDER PANEL
Scale: 3/4" = 1'-0"

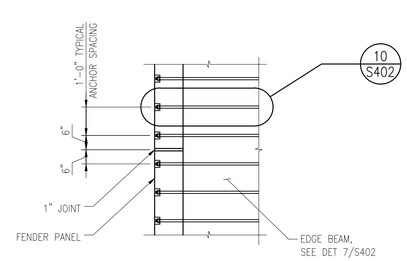

9 EXISTING FENDER ANCHOR PLAN
Scale: 3/8" = 1'-0"

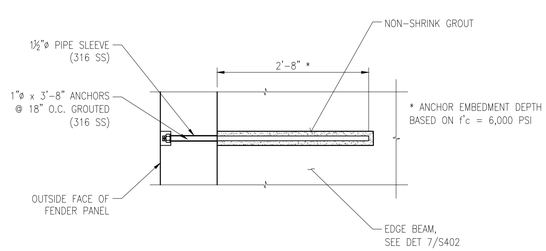

10 EXISTING FENDER ANCHOR
Scale: 3/4" = 1'-0"

SYM	DESCRIPTION	DATE	APPR
---	---	---	---

NAVFAC

SEAL

A/E INFO

APPROVED

FOR COMMANDER NAVFAC / B.I.T.L.

ACTIVITY

SATISFACTORY TO ENG.

DES DAS DRW DAS CHK KW

PROJECT MANAGER H. KING

IPT TECH. BRANCH HEAD S. ZAVOYSKI

CHIEF ENG/ARCH (CORE) KW

DEPARTMENT OF THE NAVY
NAVAL FACILITIES ENGINEERING COMMAND
NAVAL FACILITIES ENGINEERING COMMAND SOUTHEAST
NAVAL AIR STATION JACKSONVILLE
IPT SOUTH ATLANTIC
AUTEC SITE 1
ANDROS ISLAND, BAHAMAS

PIER 1902 REPAIRS

EXISTING SECTIONS AND DETAILS

SCALE: SCALE

EPROJECT NO.: 1302903

CONSTR. CONTR. NO. N69450-XX-C-XXXX

NAVFAC DRAWING NO. 15079065

SHEET 40 OF 56

S402

DRAWFORM REVISION: 7 AUGUST 2009

FILE NAME: P:\CBI\project_files\FLORIDA\nas key west 1(h)#0213\autec pier repairs-1302903\working technical files\dwgs\Sheet Files\3 - STRU1902-S-402.dwg LAYOUT NAME: 1902-S-402 PLOTTED: Monday, February 23, 2015 - 8:36am USER: douglas.szalay1

SHEET FORMAT IS 22" X 34". IF PRINTED SHEET IS NOT 22" X 34", THEN IT IS NOT TO SCALE

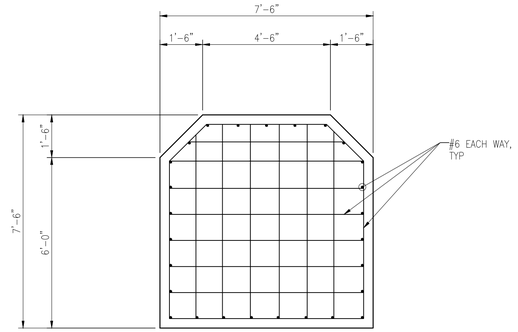

1 EXISTING DOLPHIN TOP REINFORCING PLAN
Scale: 3/8" = 1'-0"

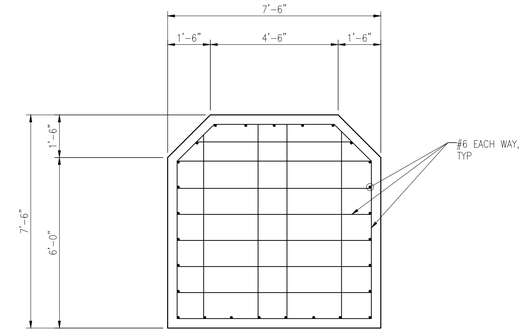

2 EXISTING DOLPHIN BOTTOM REINFORCING PLAN
Scale: 3/8" = 1'-0"

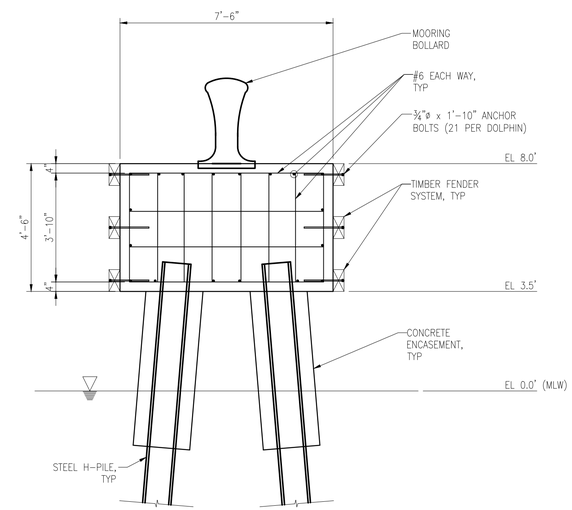

3 EXISTING DOLPHIN SECTION
Scale: 3/8" = 1'-0"

SYM	DESCRIPTION	DATE	APPR
---	---	---	---

NAVFAC

SEAL

A/E INFO

APPROVED

FOR COMMANDER NAVFAC / B.L.T.L.

ACTIVITY

SATISFACTORY TO DATE

DES	DAS	DRW	DAS	CHK	KW

PROJECT MANAGER H. KING
IPT TECH. BRANCH HEAD S. ZAVOYSKI
CHIEF ENG/ARCH (CORE) KW

DEPARTMENT OF THE NAVY
NAVAL FACILITIES ENGINEERING COMMAND
NAVAL FACILITIES ENGINEERING COMMAND SOUTHEAST
IPT SOUTH ATLANTIC
NAVAL AIR STATION JACKSONVILLE

AUTEC SITE 1
ANDROS ISLAND, BAHAMAS

PIER 1902 REPAIRS

EXISTING SECTIONS AND DETAILS

SCALE: SCALE
EPROJECT NO.: 1302903
CONSTR. CONTR. NO. N69450-XX-C-XXXX
NAVFAC DRAWING NO. 15079066
SHEET 41 OF 56
S403

DRAWFORM REVISION: 7 AUGUST 2009

SHEET FORMAT IS 22" X 34". IF PRINTED SHEET IS NOT 22" X 34", THEN IT IS NOT TO SCALE

FILE NAME: P:\CIBL\project_files\FLORIDA\nas key west fl\hjn00213\autec pier repairs-1302903\working technical files\Dwgs\Sheet Files\3 - STRU1902-S-403.dwg LAYOUT NAME: 1902-S-403 PLOTTED: Thursday, February 19, 2015 - 3:46pm USER: douglas.szilagyi

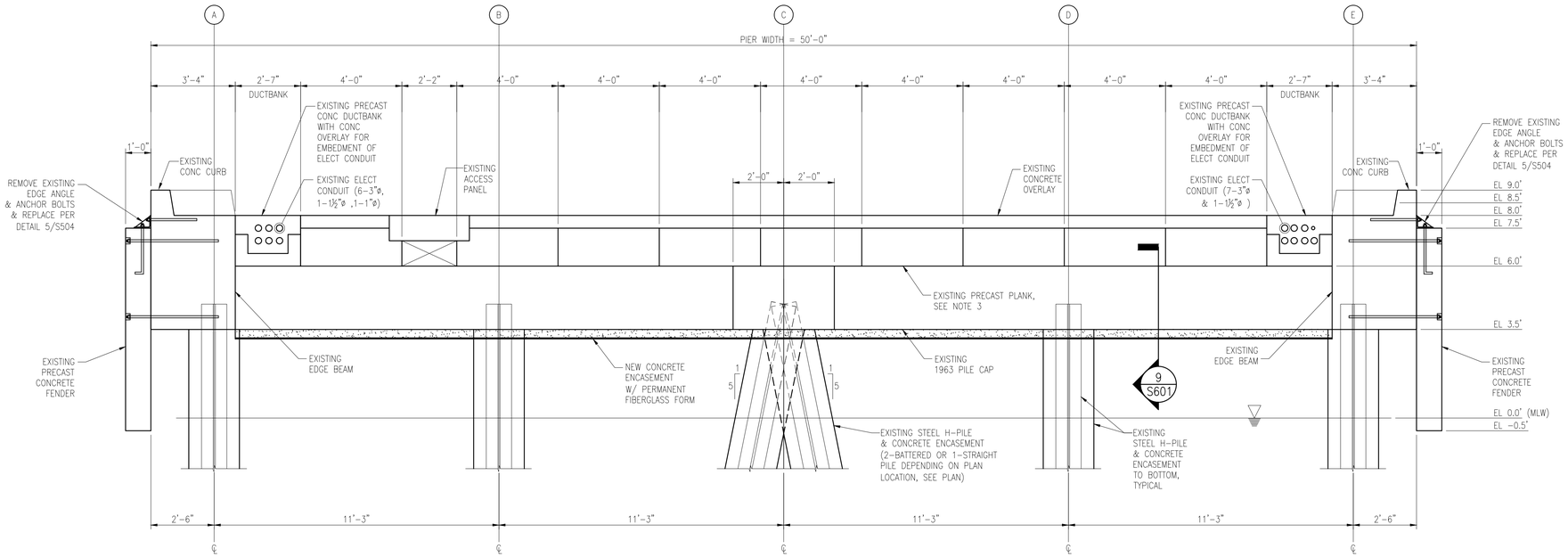

1 TYPICAL REPAIR SECTION AT 1963 PILE CAPS

Scale: 3/8" = 1'-0"

REPAIR AT 1963 PILE CAP BENT NOTES:

1. INFORMATION SHOWN IS BASED ON DRAWINGS BY THOMAS B. BOURNE ASSOCIATES, INC. DATED MAY 5, 1963 (BUREAU OF YARDS AND DOCKS DRAWINGS 975739 TO 975739) AND DRAWINGS BY NAVFAC SOUTHERN DIVISION DATED NOVEMBER 1, 1982 (NAVFAC DRAWINGS 5099652 TO 5099671 AND 5135711).

2. SEE SHEET S401 FOR INFORMATION NOT SHOWN.

3. SOME PRECAST PLANKS NEED TO BE REPLACED BUT ARE NOT SHOWN IN THIS SECTION. SEE PLANS ON SHEETS S504-S206 FOR ALL REPLACEMENT PLANK LOCATIONS. SEE SHEETS S502 AND S503 FOR PLANK REPLACEMENT SECTIONS AND SHEETS S504 AND S505 FOR PLANK REPLACEMENT DETAILS.

4. INDICATES NEW CAST-IN-PLACE CONCRETE FILL.

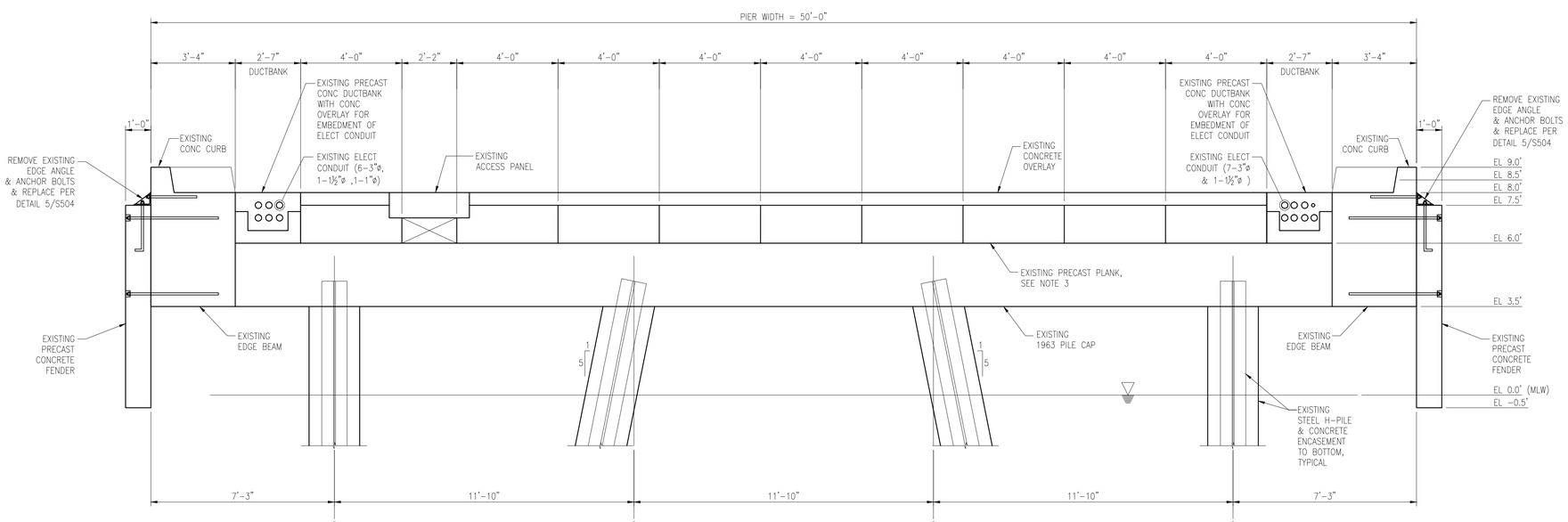

2 TYPICAL REPAIR SECTION AT 1982 PILE CAPS

Scale: 3/8" = 1'-0"

REPAIR AT 1982 PILE CAP BENT NOTES:

1. INFORMATION SHOWN IS BASED ON DRAWINGS BY NAVFAC SOUTHERN DIVISION DATED NOVEMBER 1, 1982 (NAVFAC DRAWINGS 5099652 TO 5099671 AND 5135711).

2. SEE SHEET S401 FOR INFORMATION NOT SHOWN.

3. SOME PRECAST PLANKS NEED TO BE REPLACED BUT ARE NOT SHOWN IN THIS SECTION. SEE PLANS ON SHEETS S504-S206 FOR ALL REPLACEMENT PLANK LOCATIONS. SEE SHEETS S502 AND S503 FOR PLANK REPLACEMENT SECTIONS AND SHEETS S504 AND S505 FOR PLANK REPLACEMENT DETAILS.

SYM	DESCRIPTION	DATE	APPR
---	---	---	---
---	---	---	---
---	---	---	---
---	---	---	---
---	---	---	---
---	---	---	---
---	---	---	---

SEAL

A/E INFO

APPROVED

FOR COMMANDER NAVFAC / B.L.T.L.

ACTIVITY

SATISFACTORY TO ENG.

DES DAS DRW DAS CHK KW

PROJECT MANAGER H. KING

IPT TECH. BRANCH HEAD S. ZAVOYSKI

CHIEF ENG/ARCH (CORE) KW

DEPARTMENT OF THE NAVY
IPT SOUTH ATLANTIC
NAVAL FACILITIES ENGINEERING COMMAND
NAVAL FACILITIES ENGINEERING COMMAND SOUTHEAST
NAVAL AIR STATION, JACKSONVILLE
AUTEC SITE 1
ANDROS ISLAND, BAHAMAS

PIER 1902 REPAIRS

REPAIR SECTIONS AND DETAILS

SCALE: SCALE

EPROJECT NO.: 1302903

CONSTR. CONTR. NO. N69450-XX-C-XXXX

NAVFAC DRAWING NO. 15079067

SHEET 42 OF 56

S501

DRAWFORM REVISION: 7 AUGUST 2009

SHEET FORMAT IS 22" X 34". IF PRINTED SHEET IS NOT 22" X 34", THEN IT IS NOT TO SCALE

FILE NAME: P:\CBL\project_files\FLORIDA\nas key west f(l)hjh00213\autec pier repairs-1302903\working technical files\Dwgs\Sheet Files\3 - STRU1902-S-501.dwg LAYOUT NAME: 1902-S-501 PLOTTED: Thursday, February 19, 2015 - 3:46pm USER: douglas.szilagyi

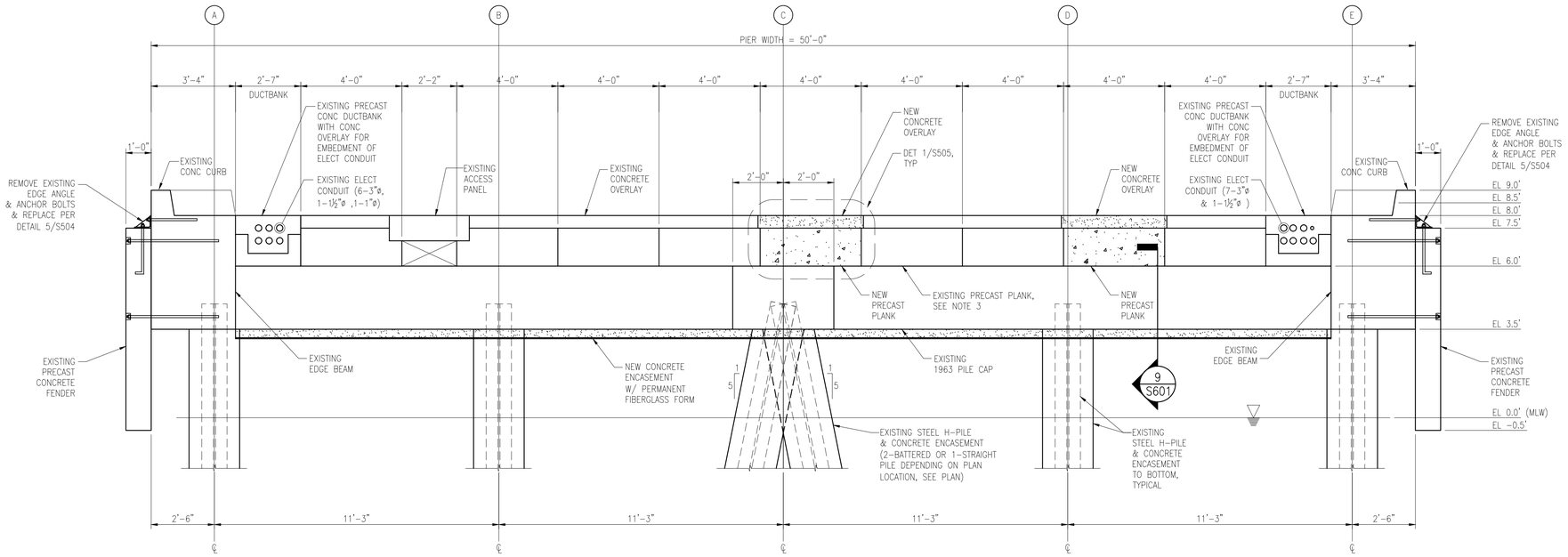

1 REPAIR SECTION
Scale: 3/8" = 1'-0"

REPAIR AT 1963 PILE CAP BENT NOTES:

1. INFORMATION SHOWN IS BASED ON DRAWINGS BY THOMAS B. BOURNE ASSOCIATES, INC. DATED MAY 5, 1963 (BUREAU OF YARDS AND DOCKS DRAWINGS 975739 TO 975739) AND DRAWINGS BY NAVFAC SOUTHERN DIVISION DATED NOVEMBER 1, 1982 (NAVFAC DRAWINGS 5099652 TO 5099671 AND 5135711).

2. SEE SHEET S401 FOR INFORMATION NOT SHOWN.

3. SEE PLANS ON SHEETS S204-S206 FOR ALL REPLACEMENT PLANK LOCATIONS. SEE SHEETS S504 AND S505 FOR PLANK REPLACEMENT SECTIONS AND DETAILS.

4. INDICATES NEW CAST-IN-PLACE CONCRETE.

5. INDICATES NEW PRECAST CONCRETE.

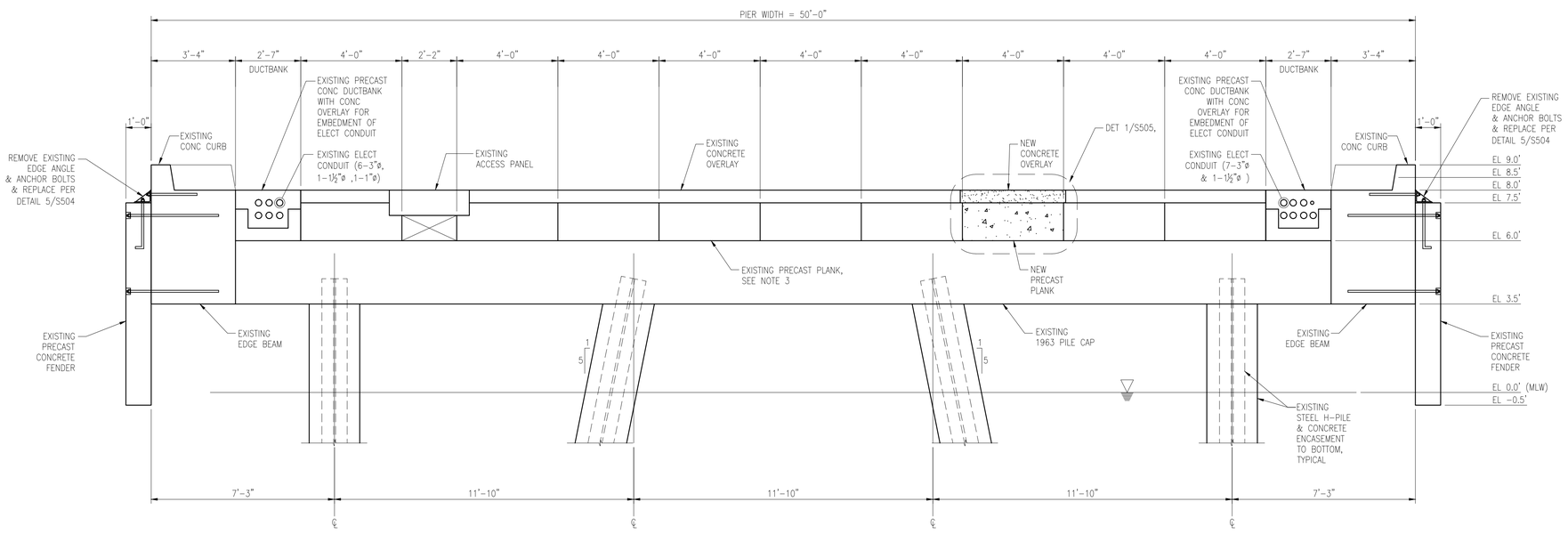

2 REPAIR SECTION
Scale: 3/8" = 1'-0"

REPAIR AT 1982 PILE CAP BENT NOTES:

1. INFORMATION SHOWN IS BASED ON DRAWINGS BY NAVFAC SOUTHERN DIVISION DATED NOVEMBER 1, 1982 (NAVFAC DRAWINGS 5099652 TO 5099671 AND 5135711).

2. SEE SHEET S401 FOR INFORMATION NOT SHOWN.

3. SEE PLANS ON SHEETS S204-S206 FOR ALL REPLACEMENT PLANK LOCATIONS. SEE SHEETS S504 AND S505 FOR PLANK REPLACEMENT SECTIONS AND DETAILS.

4. INDICATES NEW CAST-IN-PLACE CONCRETE.

5. INDICATES NEW PRECAST CONCRETE.

SYM	DESCRIPTION	DATE	APPR
---	---	---	---

NAVFAC

SEAL

A/E INFO

APPROVED

FOR COMMANDER NAVFAC / B.L.T.L.

ACTIVITY

SATISFACTORY TO DATE

DES DAS DRW DAS CHK KW

PROJECT MANAGER H. KING

IPT TECH. BRANCH HEAD S. ZAVOYSKI

CHIEF ENG/ARCH (CORE) KW

DEPARTMENT OF THE NAVY
NAVAL FACILITIES ENGINEERING COMMAND
NAVAL FACILITIES ENGINEERING COMMAND SOUTHEAST
NAVAL AIR STATION JACKSONVILLE
IPT SOUTH ATLANTIC
AUTEC SITE 1
ANDROS ISLAND, BAHAMAS

PIER 1902 REPAIRS

REPAIR SECTIONS AND DETAILS

SCALE: SCALE

EPROJECT NO.: 1302903

CONSTR. CONTR. NO. N69450-XX-C-XXXX

NAVFAC DRAWING NO. 15079068

SHEET 43 OF 56

S502

DRAWFORM REVISION: 7 AUGUST 2009

SHEET FORMAT IS 22" X 34". IF PRINTED SHEET IS NOT 22" X 34", THEN IT IS NOT TO SCALE

FILE NAME: P:\CIBL\project_files\FLORIDA\vos key west ii\hjn00213\autec pier repairs-1302903\working technical files\dwgs\Sheet Files\3 - STRU1902-S-502.dwg LAYOUT NAME: 1902-S-502 PLOTTED: Thursday, February 19, 2015 - 3:46pm USER: douglas.schlegel

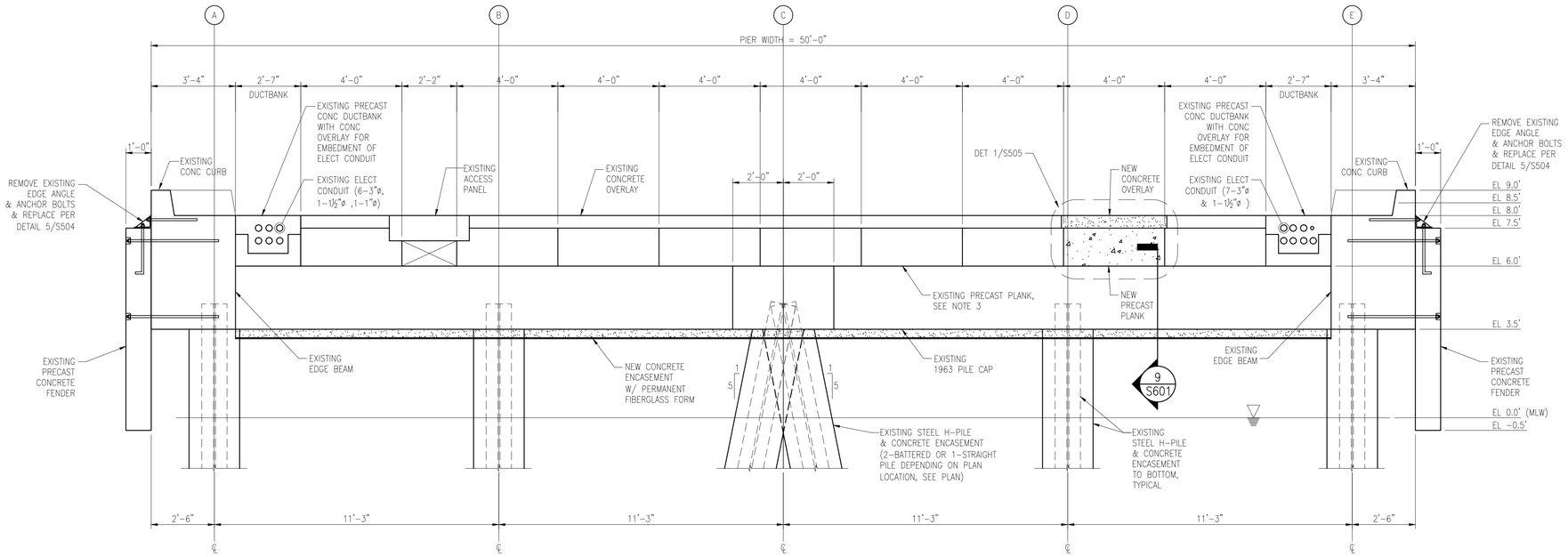

1 REPAIR SECTION
Scale: 3/8" = 1'-0"

REPAIR AT 1963 PILE CAP BENT NOTES:

1. INFORMATION SHOWN IS BASED ON DRAWINGS BY THOMAS B. BOURNE ASSOCIATES, INC. DATED MAY 5, 1963 (BUREAU OF YARDS AND DOCKS DRAWINGS 975739 TO 975739) AND DRAWINGS BY NAVFAC SOUTHERN DIVISION DATED NOVEMBER 1, 1982 (NAVFAC DRAWINGS 5099652 TO 5099671 AND 5135711).

2. SEE SHEET S401 FOR INFORMATION NOT SHOWN.

3. SEE PLANS ON SHEETS S204-S206 FOR ALL REPLACEMENT PLANK LOCATIONS. SEE SHEETS S504 AND S505 FOR PLANK REPLACEMENT SECTIONS AND DETAILS.

4. INDICATES NEW CAST-IN-PLACE CONCRETE.

5. INDICATES NEW PRECAST CONCRETE.

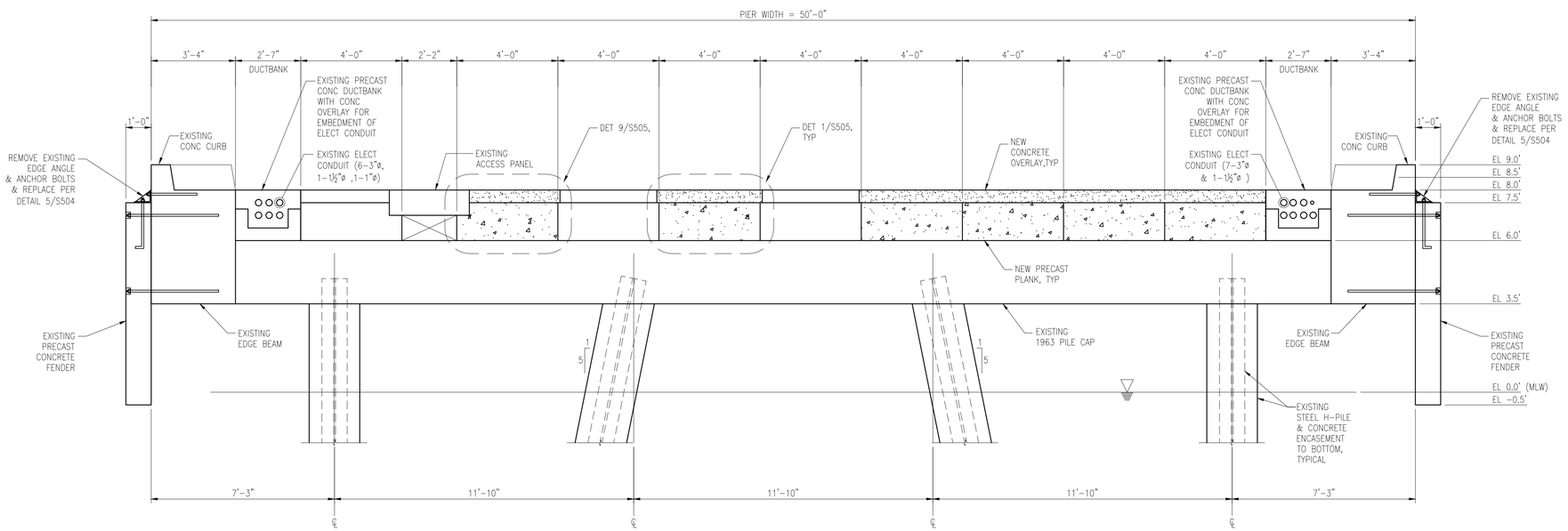

2 REPAIR SECTION
Scale: 3/8" = 1'-0"

REPAIR AT 1982 PILE CAP BENT NOTES:

1. INFORMATION SHOWN IS BASED ON DRAWINGS BY NAVFAC SOUTHERN DIVISION DATED NOVEMBER 1, 1982 (NAVFAC DRAWINGS 5099652 TO 5099671 AND 5135711).

2. SEE SHEET S401 FOR INFORMATION NOT SHOWN.

3. SEE PLANS ON SHEETS S204-S206 FOR ALL REPLACEMENT PLANK LOCATIONS. SEE SHEETS S504 AND S505 FOR PLANK REPLACEMENT SECTIONS AND DETAILS.

4. INDICATES NEW CAST-IN-PLACE CONCRETE.

5. INDICATES NEW PRECAST CONCRETE.

SYM	DESCRIPTION	DATE	APPR
---	---	---	---

SEAL

A/E INFO

APPROVED

FOR COMMANDER NAVFAC / B.L.T.L.

ACTIVITY

SATISFACTORY TO DATE

DES DAS DRW DAS CHK KW

PROJECT MANAGER H. KING

IPT TECH. BRANCH HEAD S. ZAVOYSKI

CHIEF ENG/ARCH (CORE) KW

DEPARTMENT OF THE NAVY
NAVAL FACILITIES ENGINEERING COMMAND
IPT SOUTH ATLANTIC
NAVAL FACILITIES ENGINEERING COMMAND SOUTHEAST
NAVAL AIR STATION JACKSONVILLE
AUTEC SITE 1
ANDROS ISLAND, BAHAMAS

PIER 1902 REPAIRS

REPAIR SECTIONS AND DETAILS

SCALE: SCALE

EPROJECT NO.: 1302903

CONSTR. CONTR. NO. N69450-XX-C-XXXX

NAVFAC DRAWING NO. 15079069

SHEET 44 OF 56

S503

DRAWFORM REVISION: 7 AUGUST 2009

SHEET FORMAT IS 22" X 34". IF PRINTED SHEET IS NOT 22" X 34", THEN IT IS NOT TO SCALE

FILE NAME: P:\CBL\project_files\FLORIDA\vpas key west ll\hjk00213\autec pier repairs-1302903\working technical files\dwgs\Sheet Files\S - STRU1902 -S-503.dwg LAYOUT NAME: 1902 -S-503 PLOTTED: Thursday, February 19, 2015 - 3:46pm USER: douglas.szilagyi

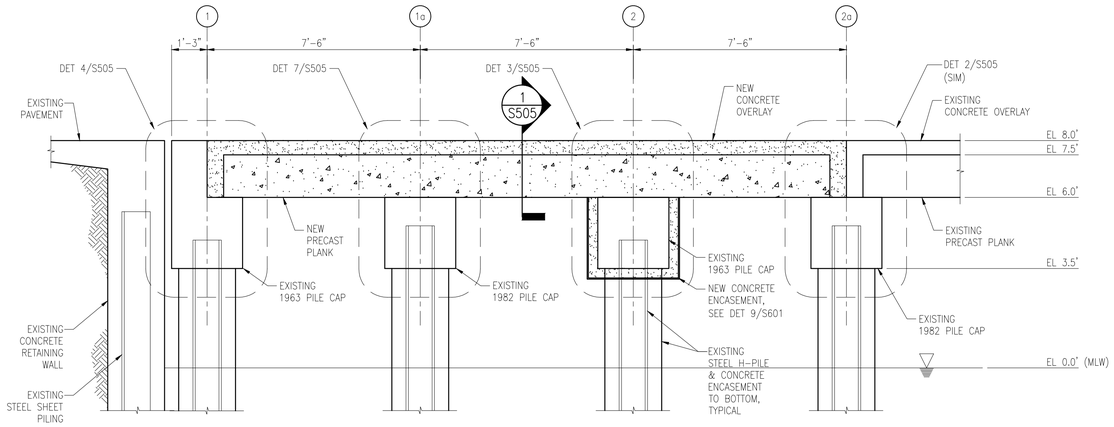

1 PRECAST PLANK REPLACEMENT AT SHORE END
Scale: 3/8" = 1'-0"

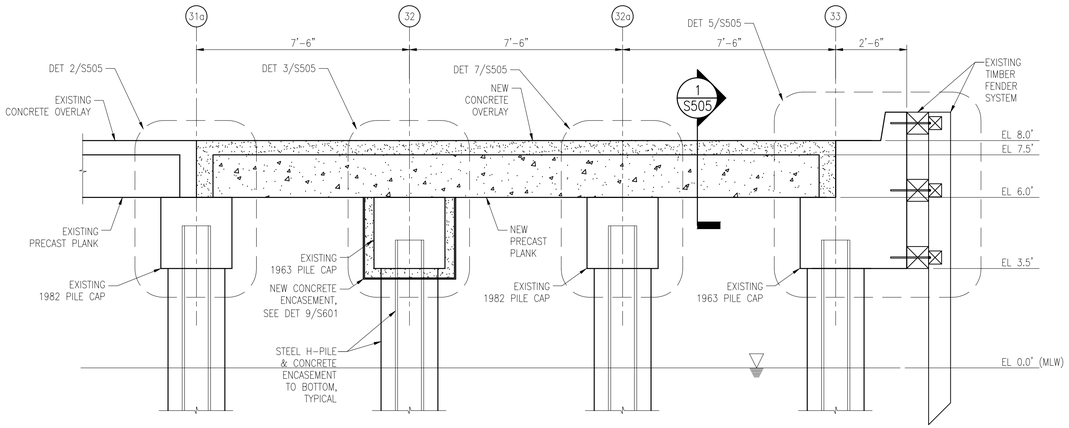

2 PRECAST PLANK REPLACEMENT AT PIER END
Scale: 3/8" = 1'-0"

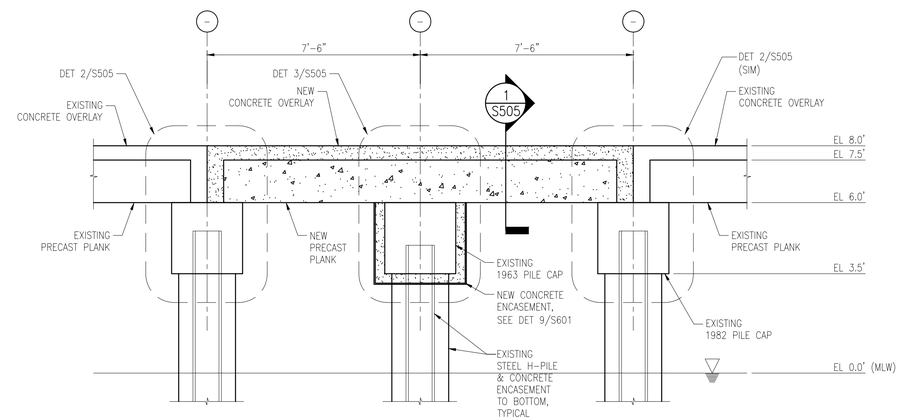

3 PRECAST PLANK REPLACEMENT
Scale: 3/8" = 1'-0"

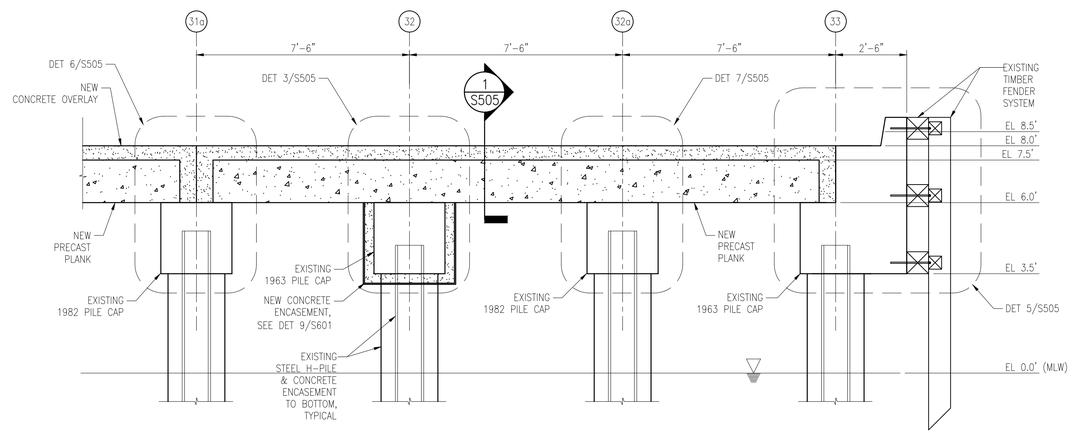

4 PRECAST PLANK REPLACEMENT AT PIER END
Scale: 3/8" = 1'-0"

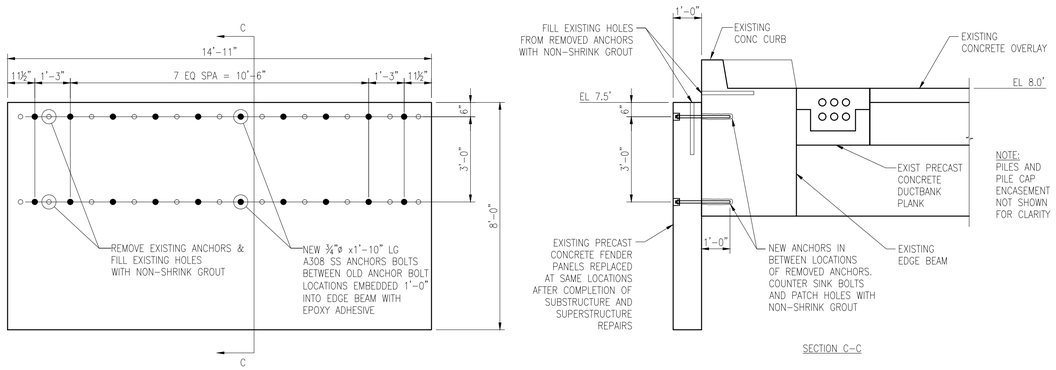

5 EXISTING CONCRETE FENDER REINSTALLATION DETAIL
Scale: 3/8" = 1'-0"

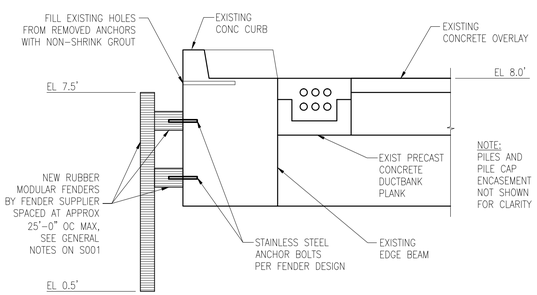

NOTE:
CONTRACTOR OPTION TO PROVIDE NEW RUBBER FENDER SYSTEM IN LIEU OF REINSTALLING THE EXISTING CONCRETE FENDER SYSTEM. RUBBER FENDER SYSTEM SHALL NOT EXCEED THE COST OF REINSTALLING THE EXISTING SYSTEM.

6 TYPICAL RUBBER FENDER DETAIL (OPTION)
Scale: 3/8" = 1'-0"

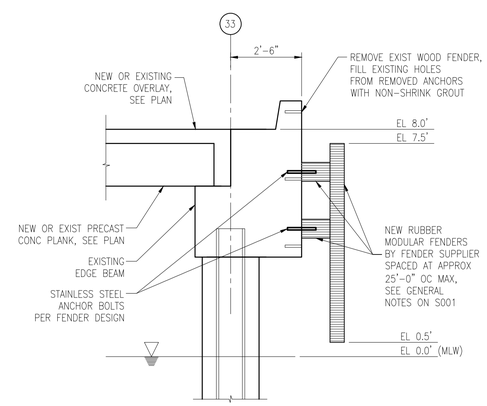

7 RUBBER FENDER DETAIL AT PIER END
Scale: 3/8" = 1'-0"

SYM	DESCRIPTION	DATE	APPR
---	---	---	---

SEAL

A/E INFO

APPROVED

FOR COMMANDER NAVFAC / B.L.T.L.

ACTIVITY

SATISFACTORY TO ENVIR.

DES DAS DRW DAS CHK KW

PROJECT MANAGER H. KING

IPT TECH. BRANCH HEAD S. ZAVOYSKI

CHIEF ENG/ARCH (CORE) KW

DEPARTMENT OF THE NAVY
NAVAL FACILITIES ENGINEERING COMMAND
IPT SOUTH ATLANTIC
AUTEC SITE 1

NAVAL FACILITIES ENGINEERING COMMAND
NAVAL FACILITIES ENGINEERING COMMAND SOUTHEAST
NAVAL AIR STATION JACKSONVILLE
ANDROS ISLAND, BAHAMAS

PIER 1902 REPAIRS

REPAIR SECTIONS AND DETAILS

SCALE: SCALE
EPROJECT NO.: 1302903
CONSTR. CONTR. NO. N69450-XX-C-XXXX
NAVFAC DRAWING NO. 15079070
SHEET 45 OF 56
S504

DRAWFORM REVISION: 7 AUGUST 2009

SHEET FORMAT IS 22" X 34". IF PRINTED SHEET IS NOT 22" X 34", THEN IT IS NOT TO SCALE

FILE NAME: P:\CBL\project_files\FLORIDA\nas key west fl\hj\n00213\autec pier repairs-1302903\working technical files\dwgs\Sheet Files\3 - STRU1902-S-S04.dwg LAYOUT NAME: 1902-S-S04 PLOTTED: Thursday, February 19, 2015 - 3:46pm USER: douglas.szilagyi

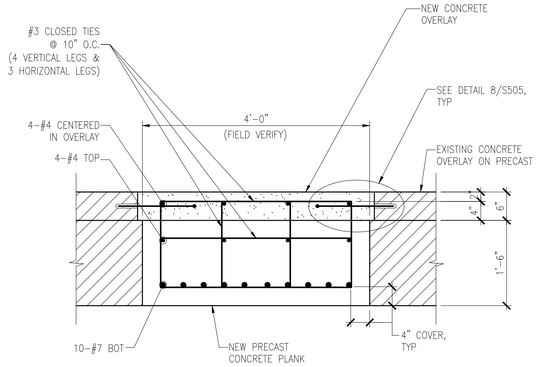

1 PRECAST PLANK DETAIL
Scale: 3/4" = 1'-0"

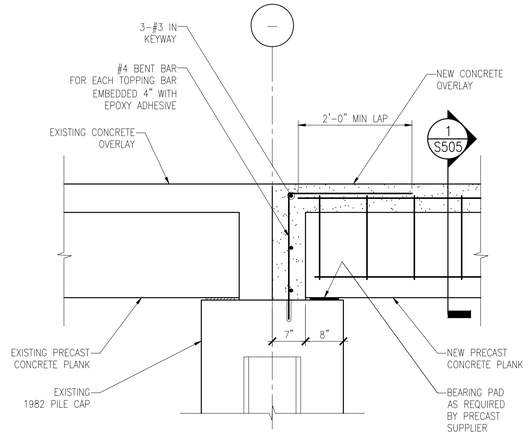

2 PRECAST PLANK END BEARING
Scale: 3/4" = 1'-0"

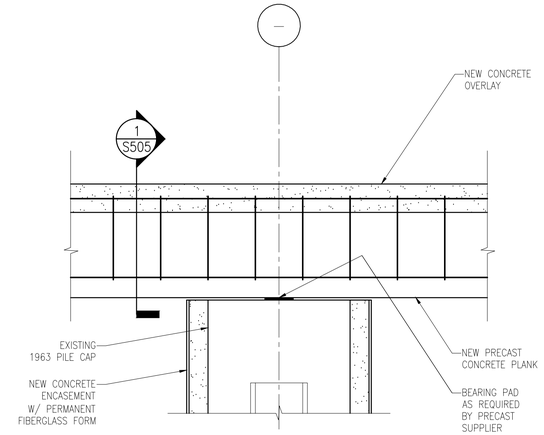

3 PRECAST PLANK MID BEARING
Scale: 3/4" = 1'-0"

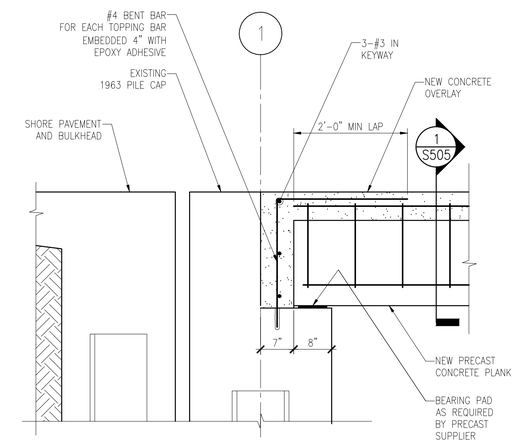

4 PRECAST PLANK AT SHORE END
Scale: 3/4" = 1'-0"

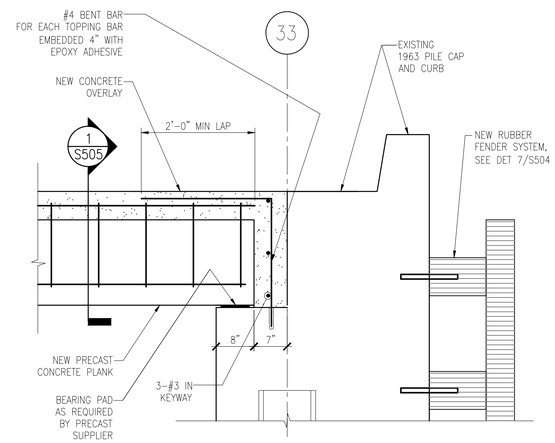

5 INBOARD PRECAST PLANK AT PIER END
Scale: 3/4" = 1'-0"

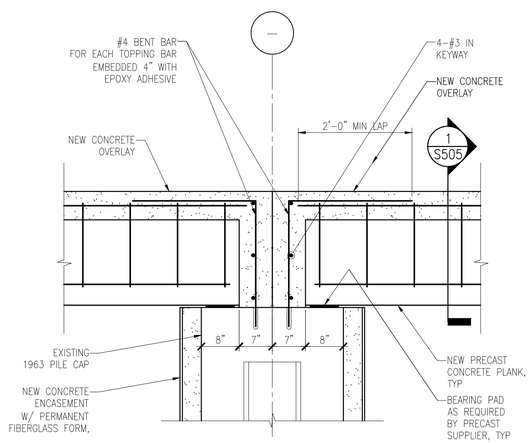

6 PRECAST PLANK AT END BEARING
Scale: 3/4" = 1'-0"

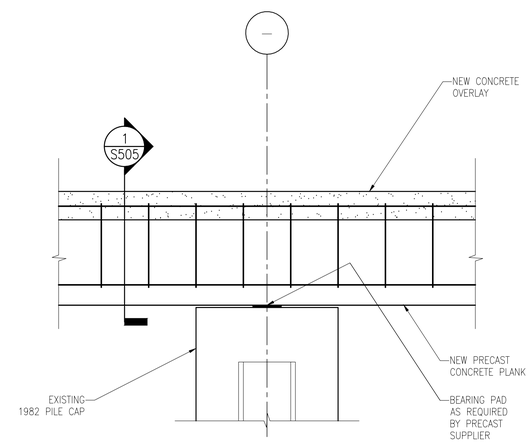

7 PRECAST PLANK AT MID BEARING
Scale: 3/4" = 1'-0"

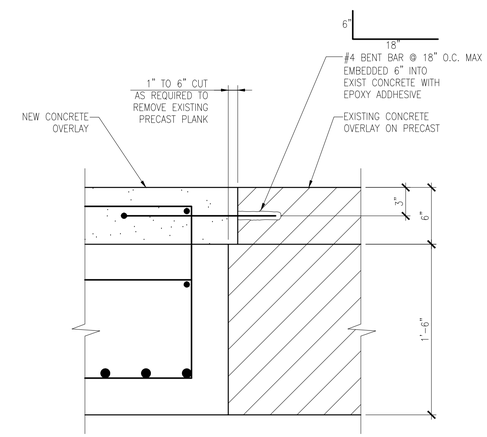

8 PRECAST PLANK JOINT DETAIL
Scale: 3/4" = 1'-0"

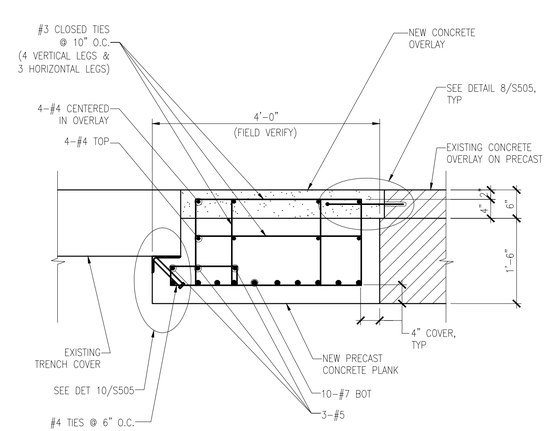

9 PRECAST PLANK AT ACCESS PANEL
Scale: 3/4" = 1'-0"

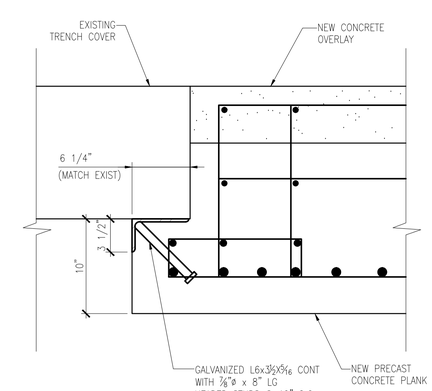

10 PRECAST PLANK DETAIL
Scale: 3/4" = 1'-0"

SYM	DESCRIPTION	DATE	APPR
---	---	---	---

SEAL

A/E INFO

APPROVED

FOR COMMANDER NAVFAC / B.L.T.L.

ACTIVITY

SATISFACTORY TO CODE

DES DAS DRW DAS CHK. KW

PROJECT MANAGER H. KING

IPT TECH. BRANCH HEAD S. ZAVOYSKI

CHIEF ENG/ARCH (CORE) KW

DEPARTMENT OF THE NAVY
NAVAL FACILITIES ENGINEERING COMMAND
IPT SOUTH ATLANTIC
AUTEC SITE 1

NAVAL FACILITIES ENGINEERING COMMAND
NAVAL FACILITIES ENGINEERING COMMAND SOUTHEAST
NAVAL AIR STATION JACKSONVILLE
ANDROS ISLAND, BAHAMAS

PIER 1902 REPAIRS

REPAIR SECTION AND DETAILS

SCALE: SCALE

EPROJECT NO.: 1302903

CONSTR. CONTR. NO. N69450-XX-C-XXXX

NAVFAC DRAWING NO. 15079071

SHEET 46 OF 56

S505

DRAWFORM REVISION: 7 AUGUST 2009

SHEET FORMAT IS 22" X 34". IF PRINTED SHEET IS NOT 22" X 34", THEN IT IS NOT TO SCALE

FILE NAME: P:\CBR\project_files\FLORIDA\yoss key west ff\hj\00213\autec per repairs-1302903\working technical files\Dwgs\Sheet Files\3 - SITU1902-S-505.dwg LAYOUT NAME: 1902-S-505 PLOTTED: Thursday, February 19, 2015 - 3:46pm USER: douglas.szilagyi

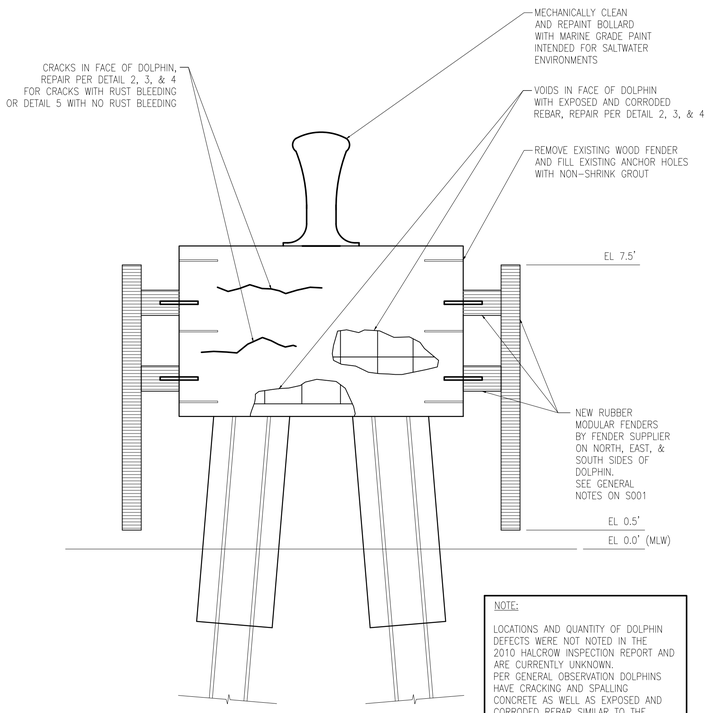

NOTE:

LOCATIONS AND QUANTITY OF DOLPHIN DEFECTS WERE NOT NOTED IN THE 2010 HALCROW INSPECTION REPORT AND ARE CURRENTLY UNKNOWN. PER GENERAL OBSERVATION DOLPHINS HAVE CRACKING AND SPALLING CONCRETE AS WELL AS EXPOSED AND CORRODED REBAR SIMILAR TO THE 1963 PILE CAPS. ASSUME THE FOLLOWING FOR BIDDING PURPOSES:

1. 25% OF THE DOLPHIN SURFACE HAS CONCRETE SPALLING WITH EXPOSED AND CORRODED REBAR.
2. 50% OF THE DOLPHIN SURFACE HAS CRACKED CONCRETE.
3. 50% OF THE CRACKING HAS RUST BLEEDING.

1 TYPICAL DOLPHIN REPAIR ELEVATION
Scale: 1/2" = 1'-0"

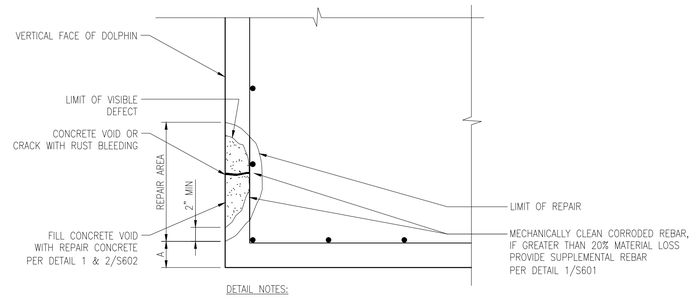

DETAIL NOTES:

1. REMOVE ALL LOOSE AND CRACKED CONCRETE DOWN TO SOUND CONCRETE IN THE AREA OF REPAIR.
2. IF 'A' IS LESS THAN 4" THEN REMOVE CONCRETE DOWN TO BOTTOM OF THE BEAM
3. FOR VOIDS WITH EXPOSED REBAR AND CRACKS WITH RUST BLEEDING REMOVE CONCRETE PAST REBAR AS INDICATED.
4. FOR CRACKS WITHOUT RUST BLEEDING SEE DETAIL 5/S506.
5. FOR VOIDS AND CRACKS W/ RUST BLEEDING AT BOTTOM OF BEAM SEE DETAIL 3 & 4/S506.

2 DOLPHIN VERTICAL FACE REPAIR
Scale: 1" = 1'-0"

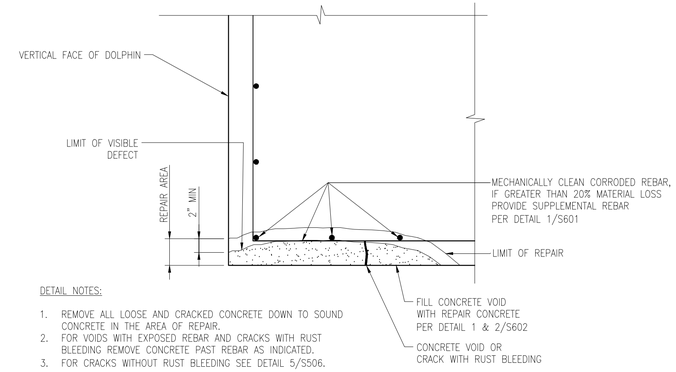

DETAIL NOTES:

1. REMOVE ALL LOOSE AND CRACKED CONCRETE DOWN TO SOUND CONCRETE IN THE AREA OF REPAIR.
2. FOR VOIDS WITH EXPOSED REBAR AND CRACKS WITH RUST BLEEDING REMOVE CONCRETE PAST REBAR AS INDICATED.
3. FOR CRACKS WITHOUT RUST BLEEDING SEE DETAIL 5/S506.

3 DOLPHIN UNDERSIDE REPAIR
Scale: 1" = 1'-0"

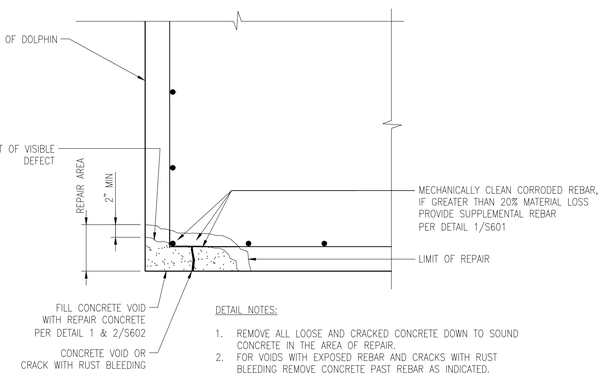

DETAIL NOTES:

1. REMOVE ALL LOOSE AND CRACKED CONCRETE DOWN TO SOUND CONCRETE IN THE AREA OF REPAIR.
2. IF VOIDS WITH EXPOSED REBAR AND CRACKS WITH RUST BLEEDING REMOVE CONCRETE PAST REBAR AS INDICATED.
3. FOR CRACKS WITHOUT RUST BLEEDING SEE DETAIL 5/S506.

4 DOLPHIN CORNER REPAIR
Scale: 1" = 1'-0"

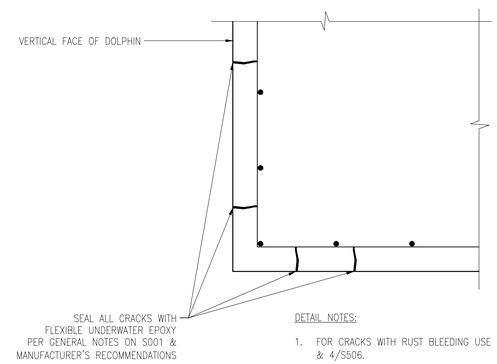

DETAIL NOTES:

1. FOR CRACKS WITH RUST BLEEDING USE DETAILS 2/S506, 3/S506, & 4/S506.
2. USE PRESSURE INJECTION WHEN APPLICABLE PER MANUFACTURER'S RECOMMENDATIONS.
3. CRACKS GREATER THAN 1/16" SHALL BE ROUTED PER MANUFACTURER'S RECOMMENDATIONS.

5 DOLPHIN CRACK REPAIR (NO RUST BLEEDING)
Scale: 1" = 1'-0"

SYM	DESCRIPTION	DATE	APPR
---	---	---	---
---	---	---	---
---	---	---	---
---	---	---	---
---	---	---	---
---	---	---	---
---	---	---	---

NAVFAC

SEAL

A/E INFO

APPROVED

FOR COMMANDER NAVFAC / B.L.T.L.

ACTIVITY

SATISFACTORY TO USE

DES DAS DRW DAS CHK KW

PROJECT MANAGER H. KING

IPT TECH. BRANCH HEAD S. ZAVOYSKI

CHIEF ENG/ARCH (CORE) KW

---- .

DEPARTMENT OF THE NAVY
NAVAL FACILITIES ENGINEERING COMMAND
NAVAL FACILITIES ENGINEERING COMMAND SOUTHEAST
NAVAL AIR STATION JACKSONVILLE
IPT SOUTH ATLANTIC
AUTEC SITE 1
ANDROS ISLAND, BAHAMAS

PIER 1902 REPAIRS

REPAIR SECTIONS AND DETAILS

SCALE: SCALE

EPROJECT NO.: 1302903

CONSTR. CONTR. NO. N69450-XX-C-XXXX

NAVFAC DRAWING NO. 15079072

SHEET 47 OF 56

S506

DRAWFORM REVISION: 7 AUGUST 2009

FILE NAME: P:\CBL\project_files\FLORIDA\vaas key west ll\hjh00213\autec pier repairs-1302903\working technical files\Dwgs\Sheet Files\3 - STRU1902-S-506.dwg LAYOUT NAME: 1902-S-506 PLOTTED: Thursday, February 19, 2015 - 3:46pm USER: douglas.szilagyi

SHEET FORMAT IS 22" X 34". IF PRINTED SHEET IS NOT 22" X 34", THEN IT IS NOT TO SCALE

REBAR LAP SCHEDULE									
BAR NUMBER	#3	#4	#5	#6	#7	#8	#9	#10	#11
BAR DIAMETER	0.38"	0.50"	0.63"	0.75"	0.88"	1.0"	1.13"	1.27"	1.41"
MIN LAP LENGTH	12"	15"	19"	23"	27"	30"	34"	38"	43"

NOTE: MIN LAP LENGTHS BASED ON ACI 318-08, CHAPTER 12

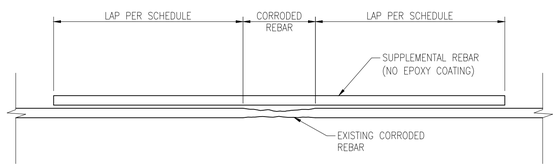

1 REBAR SPLICE
Scale: N.T.S

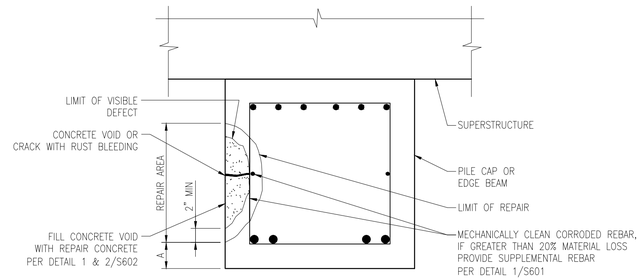

DETAIL NOTES:

1. REMOVE ALL LOOSE AND CRACKED CONCRETE DOWN TO SOUND CONCRETE IN THE AREA OF REPAIR.
2. IF 'A' IS LESS THAN 4" THEN REMOVE CONCRETE DOWN TO BOTTOM OF THE BEAM
3. FOR VOIDS WITH EXPOSED REBAR AND CRACKS WITH RUST BLEEDING REMOVE CONCRETE PAST REBAR AS INDICATED.
4. FOR CRACKS WITHOUT RUST BLEEDING SEE DETAIL 5/S403.
5. FOR VOIDS AND CRACKS W/ RUST BLEEDING AT BOTTOM OF BEAM SEE DETAIL 3 & 4/S601.
6. REPAIR CONCRETE SHALL BE AT LEAST 1" BEHIND REBAR PER DETAIL 1/S602

2 BEAM VERTICAL FACE REPAIR
Scale: 1" = 1'-0"

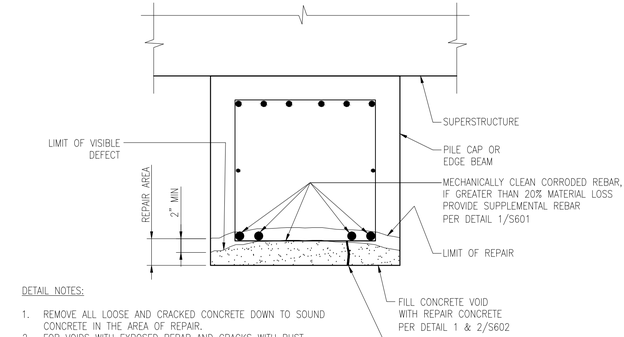

DETAIL NOTES:

1. REMOVE ALL LOOSE AND CRACKED CONCRETE DOWN TO SOUND CONCRETE IN THE AREA OF REPAIR.
2. FOR VOIDS WITH EXPOSED REBAR AND CRACKS WITH RUST BLEEDING REMOVE CONCRETE PAST REBAR AS INDICATED.
4. FOR CRACKS WITHOUT RUST BLEEDING SEE DETAIL 5/S601.
5. REPAIR CONCRETE SHALL BE AT LEAST 1" BEHIND REBAR PER DETAIL 1/S602

3 BEAM UNDERSIDE REPAIR
Scale: 1" = 1'-0"

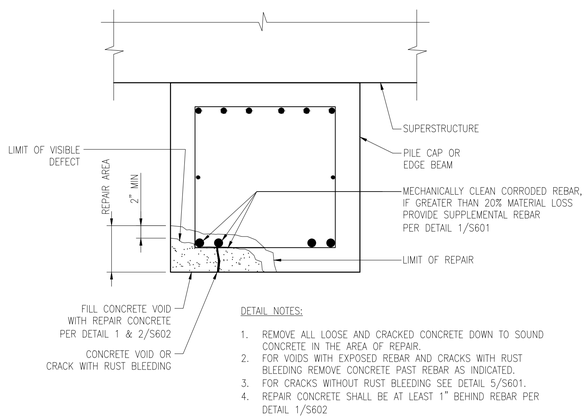

DETAIL NOTES:

1. REMOVE ALL LOOSE AND CRACKED CONCRETE DOWN TO SOUND CONCRETE IN THE AREA OF REPAIR.
2. FOR VOIDS WITH EXPOSED REBAR AND CRACKS WITH RUST BLEEDING REMOVE CONCRETE PAST REBAR AS INDICATED.
3. FOR CRACKS WITHOUT RUST BLEEDING SEE DETAIL 5/S601.
4. REPAIR CONCRETE SHALL BE AT LEAST 1" BEHIND REBAR PER DETAIL 1/S602

4 BEAM CORNER REPAIR
Scale: 1" = 1'-0"

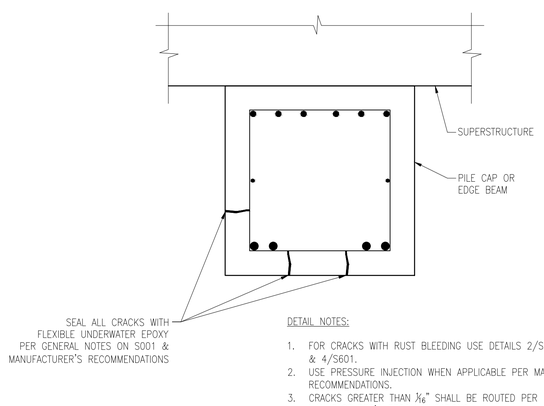

DETAIL NOTES:

1. FOR CRACKS WITH RUST BLEEDING USE DETAILS 2/S601, 3/S601, & 4/S601.
2. USE PRESSURE INJECTION WHEN APPLICABLE PER MANUFACTURER'S RECOMMENDATIONS.
3. CRACKS GREATER THAN 1/16" SHALL BE ROUTED PER MANUFACTURER'S RECOMMENDATIONS.

5 BEAM CRACK REPAIR (NO RUST BLEEDING)
Scale: 1" = 1'-0"

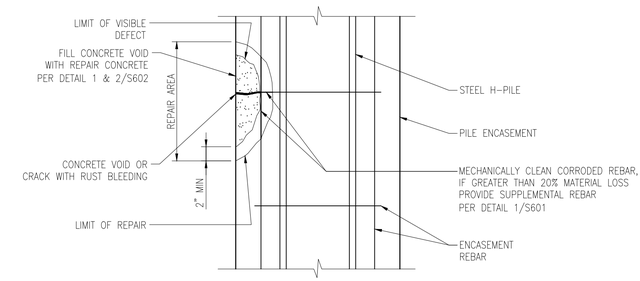

DETAIL NOTES:

1. REMOVE ALL LOOSE AND CRACKED CONCRETE DOWN TO SOUND CONCRETE IN THE AREA OF REPAIR.
2. FOR VOIDS WITH EXPOSED REBAR AND CRACKS WITH RUST BLEEDING REMOVE CONCRETE PAST REBAR AS INDICATED.
4. FOR CRACKS WITHOUT RUST BLEEDING SEE DETAIL 7/S601.
5. REPAIR CONCRETE SHALL BE AT LEAST 1" BEHIND REBAR PER DETAIL 1/S602

6 PILE ENCASEMENT VERTICAL FACE REPAIR
Scale: 1" = 1'-0"

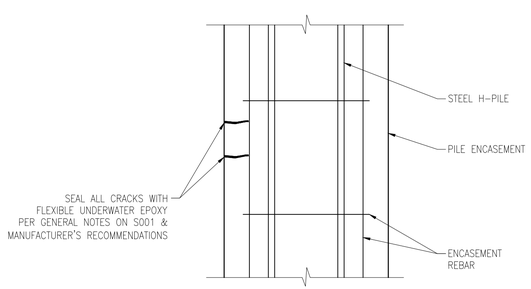

DETAIL NOTES:

1. FOR CRACKS WITH RUST BLEEDING USE DETAILS 6/S601,
2. USE PRESSURE INJECTION WHEN APPLICABLE PER MANUFACTURER'S RECOMMENDATIONS.

7 PILE ENCASEMENT CRACK REPAIR
Scale: 1" = 1'-0"

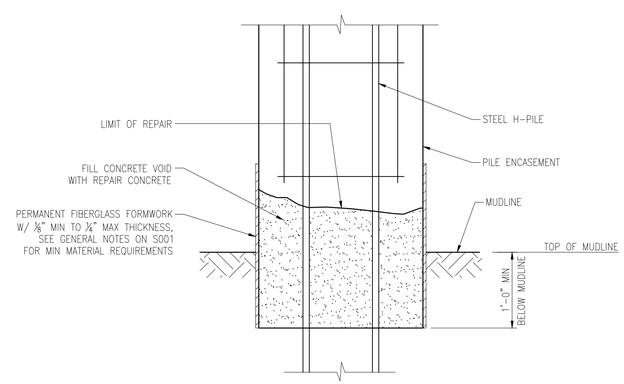

8 PILE ENCASEMENT BASE REPAIR
Scale: 1" = 1'-0"

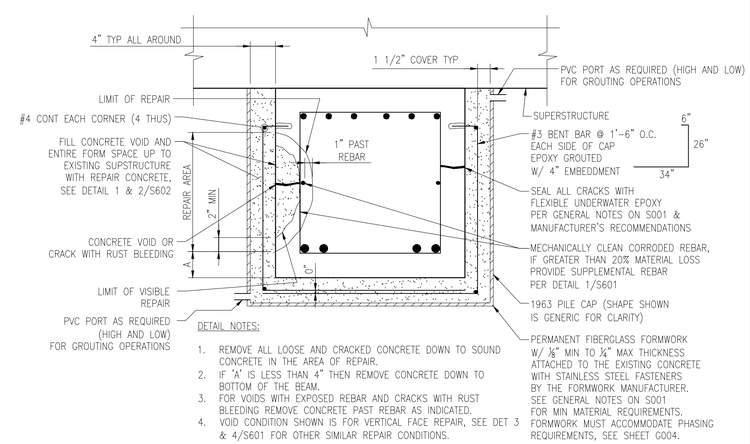

DETAIL NOTES:

1. REMOVE ALL LOOSE AND CRACKED CONCRETE DOWN TO SOUND CONCRETE IN THE AREA OF REPAIR.
2. IF 'A' IS LESS THAN 4" THEN REMOVE CONCRETE DOWN TO BOTTOM OF THE BEAM.
3. FOR VOIDS WITH EXPOSED REBAR AND CRACKS WITH RUST BLEEDING REMOVE CONCRETE PAST REBAR AS INDICATED.
4. VOID CONDITION SHOWN IS FOR VERTICAL FACE REPAIR, SEE DET 3 & 4/S601 FOR OTHER SIMILAR REPAIR CONDITIONS.

9 1963 PILE CAP ENCASEMENT REPAIR
Scale: 1" = 1'-0"

SYM	DESCRIPTION	DATE	APPR
---	---	---	---
---	---	---	---
---	---	---	---
---	---	---	---
---	---	---	---
---	---	---	---
---	---	---	---

NAVFAC

SEAL

A/E INFO

APPROVED

FOR COMMANDER NAVFAC / B.L.T.L.

ACTIVITY

SATISFACTORY TO ENG:

DES DAS DRW DAS CHK KW

PROJECT MANAGER H. KING

IPT TECH. BRANCH HEAD S. ZAVOYSKI

CHIEF ENG/ARCH (CORE) KW

DEPARTMENT OF THE NAVY
NAVAL FACILITIES ENGINEERING COMMAND
NAVAL FACILITIES ENGINEERING COMMAND SOUTHEAST
NAVAL AIR STATION JACKSONVILLE
IPT SOUTH ATLANTIC
AUTEC SITE 1
ANDROS ISLAND, BAHAMAS

PIER 1902 REPAIRS

REPAIR DETAILS

SCALE: SCALE
EPROJECT NO.: 1302903
CONSTR. CONTR. NO. N69450-XX-C-XXXX
NAVFAC DRAWING NO. 15079073
SHEET 48 OF 56

S601

DRAWFORM REVISION: 7 AUGUST 2009

FILE NAME: P:\CBL\project_files\FLORIDA\nas key west f\jhj\h00213\autec pier repairs-1302903\working technical files\dwgs\Sheet Files\3 - STRU1902-S-601.dwg LAYOUT NAME: 1902-S-601 PLOTTED: Thursday, February 19, 2015 - 3:46pm USER: douglas.szilagyi

SHEET FORMAT IS 22" X 34". IF PRINTED SHEET IS NOT 22" X 34", THEN IT IS NOT TO SCALE

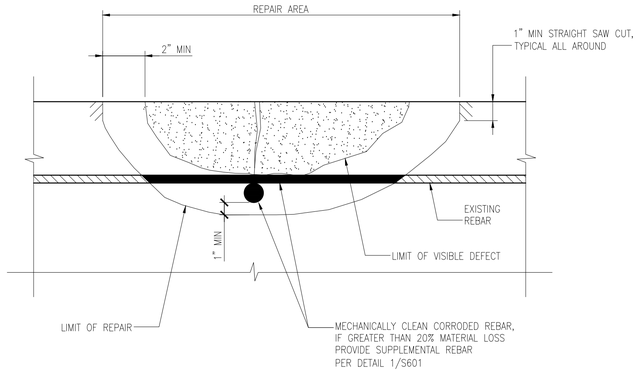

1 REBAR REPAIR DETAIL
Scale: 3" = 1'-0"

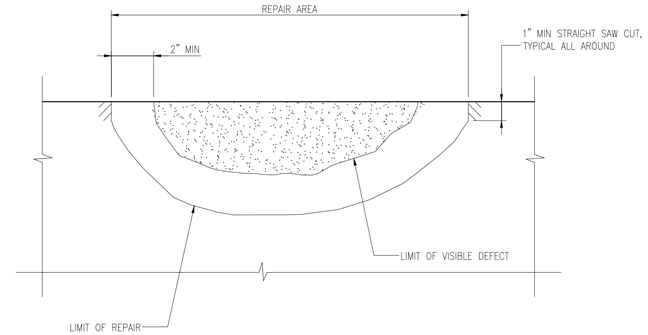

2 SPALL REPAIR DETAIL
Scale: 3" = 1'-0"

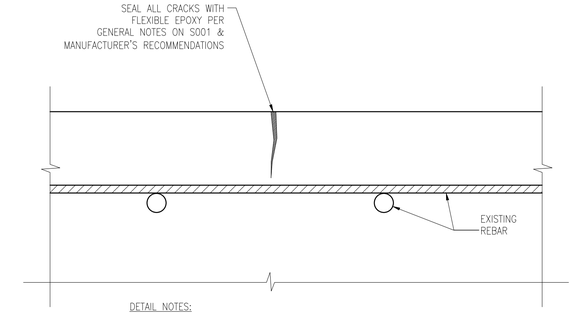

DETAIL NOTES:

1. FOR CRACKS WITH RUST BLEEDING USE DETAILS 1/S602
2. USE PRESSURE INJECTION WHEN APPLICABLE PER MANUFACTURER'S RECOMMENDATIONS.
3. CRACKS GREATER THAN 1/16" SHALL BE ROUTED PER MANUFACTURER'S RECOMMENDATIONS.
4. FOR MULTIPLE INTERCONNECTED CRACKS, SEE CRACK MAPPING REPAIR DETAIL 7/S602.

3 CRACK REPAIR DETAIL
Scale: 3" = 1'-0"

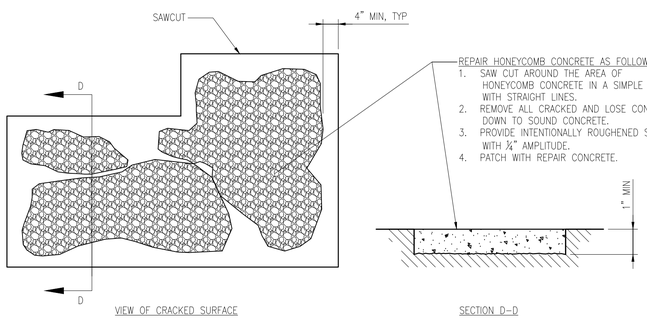

REPAIR HONEYCOMB CONCRETE AS FOLLOWS:

1. SAW CUT AROUND THE AREA OF HONEYCOMB CONCRETE IN A SIMPLE SHAPE WITH STRAIGHT LINES.
2. REMOVE ALL CRACKED AND LOSE CONCRETE DOWN TO SOUND CONCRETE.
3. PROVIDE INTENTIONALLY ROUGHENED SURFACE WITH 1/4" AMPLITUDE.
4. PATCH WITH REPAIR CONCRETE.

4 HONEYCOMB REPAIR DETAIL
Scale: N.T.S

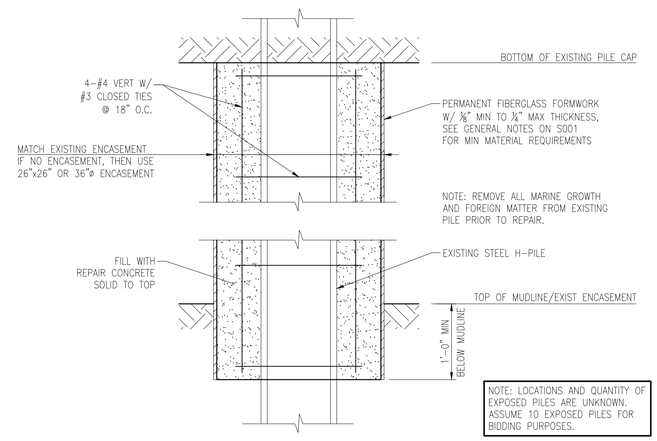

NOTE: LOCATIONS AND QUANTITY OF EXPOSED PILES ARE UNKNOWN. ASSUME 10 EXPOSED PILES FOR BIDDING PURPOSES.

5 PILE ENCASEMENT FOR EXPOSED H-PILE
Scale: 1" = 1'-0"

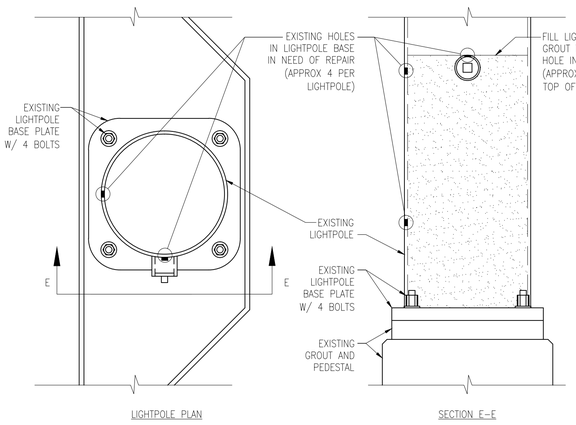

REPAIR NOTES:

1. MECHANICALLY REMOVE ALL CORROSION AND LOOSE MATERIAL AT BASE PLATE, BOLTS AND NUTS, AND FIRST 48" OF LIGHTPOLE PER SSP1.

2. FILL LIGHTPOLE WITH GROUT (5000 PSI MIN) UP TO HIGHEST HOLE OF FIRST 48" FROM BASE.

3. PATCH HOLES WITH 3/8" MIN STEEL PLATES TO MATCH EXIST MIN 1" WIDER THAN HOLE IN EACH DIRECTION MATCHING SHAPE OF POLE. FASTEN PLATE TO POLE WITH 3/16" MIN FILLET WELD ALL AROUND (WATER TIGHT), SEE DET 8/S602

4. PAINT FIRST 48" OF LIGHTPOLE FROM BASE, BASE PLATE, AND BOLTS AND NUTS WITH MARINE GRADE PAINT, SEE GENERAL NOTES.

6 LIGHTPOLE REPAIR DETAIL
Scale: N.T.S

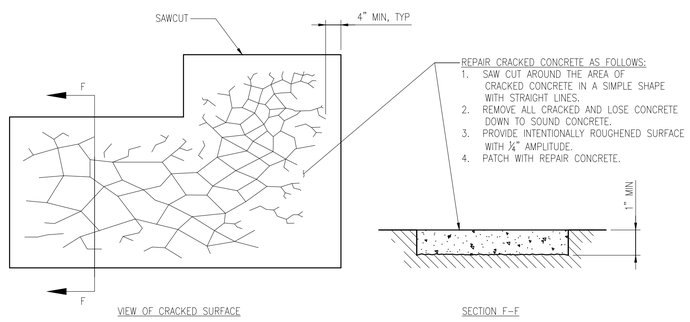

REPAIR CRACKED CONCRETE AS FOLLOWS:

1. SAW CUT AROUND THE AREA OF CRACKED CONCRETE IN A SIMPLE SHAPE WITH STRAIGHT LINES.
2. REMOVE ALL CRACKED AND LOSE CONCRETE DOWN TO SOUND CONCRETE.
3. PROVIDE INTENTIONALLY ROUGHENED SURFACE WITH 1/4" AMPLITUDE.
4. PATCH WITH REPAIR CONCRETE.

7 CRACK MAPPING REPAIR DETAIL
Scale: N.T.S

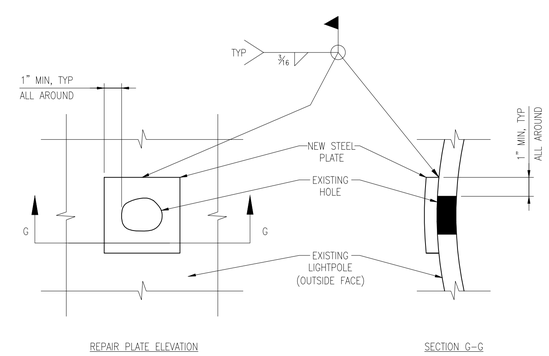

8 STEEL REPAIR PLATE DETAIL
Scale: N.T.S

SYM	DESCRIPTION	DATE	APPR
---	---	---	---
---	---	---	---
---	---	---	---
---	---	---	---
---	---	---	---
---	---	---	---
---	---	---	---

NAVFAC

SEAL

A/E INFO

APPROVED

FOR COMMANDER NAVFAC / B.L.T.L.

ACTIVITY

SATISFACTORY TO USE

DES DAS | DRW DAS | CHK KW

PROJECT MANAGER H. KING

IPT TECH. BRANCH HEAD S. ZAVOYSKI

CHIEF ENG/ARCH (CORE) KW

DEPARTMENT OF THE NAVY
NAVAL FACILITIES ENGINEERING COMMAND
IPT SOUTH ATLANTIC
NAVAL FACILITIES ENGINEERING COMMAND SOUTHEAST
NAVAL AIR STATION JACKSONVILLE
AUTEC SITE 1
ANDROS ISLAND, BAHAMAS

PIER 1902 REPAIRS

REPAIR DETAILS

SCALE: SCALE

EPROJECT NO.: 1302903

CONSTR. CONTR. NO. N69450-XX-C-XXXX

NAVFAC DRAWING NO. 15079074

SHEET 49 OF 56

S602

DRAWFORM REVISION: 7 AUGUST 2009

FILE NAME: P:\CBL\project_files\FLORIDA\vas key west il\hjk00213\autec pier repairs-1302903\working technical files\Dwgs\Sheet Files\S - STRU1902-S-602.dwg LAYOUT NAME: 1902-S-602 PLOTTED: Thursday, February 19, 2015 - 3:47pm USER: douglas.szilagyi

SHEET FORMAT IS 22" X 34". IF PRINTED SHEET IS NOT 22" X 34", THEN IT IS NOT TO SCALE

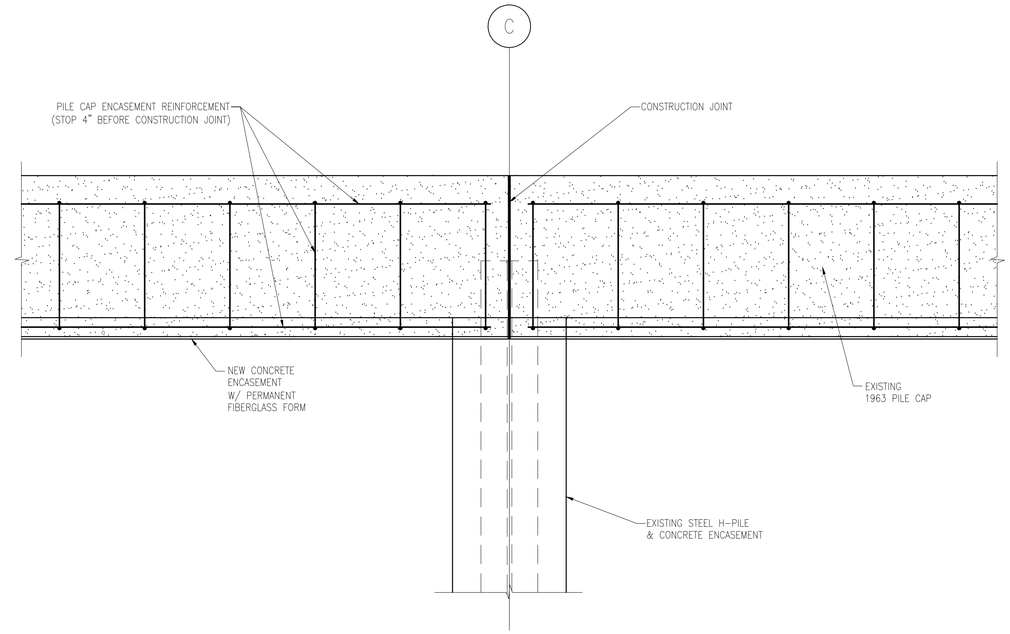

1 1963 PILE CAP ENCASEMENT CONSTRUCTION JOINT – GRID 2–5

Scale: 3/4" = 1'–0"

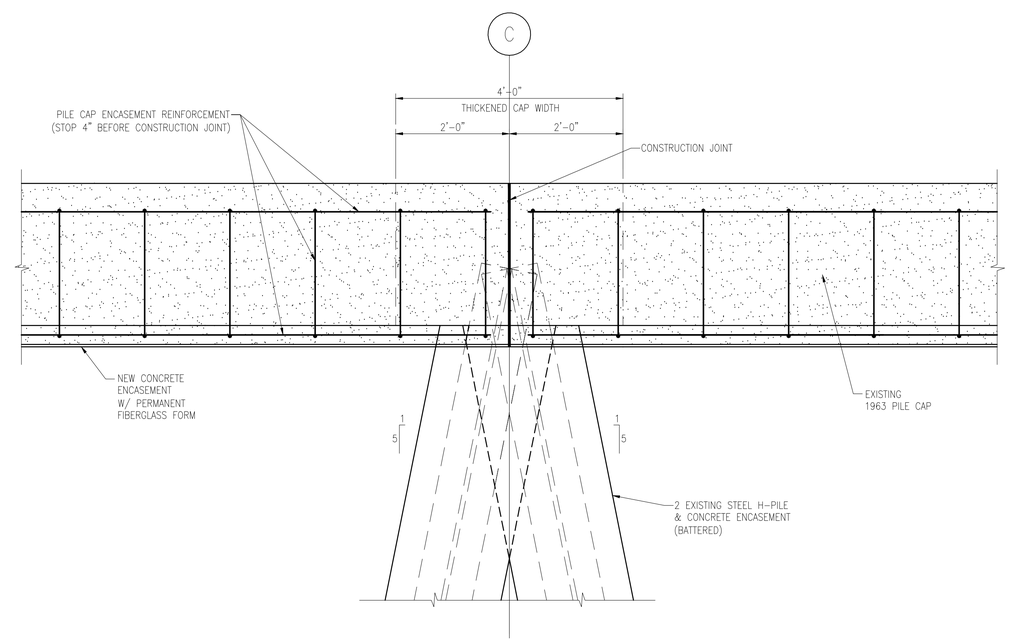

2 1963 PILE CAP ENCASEMENT CONSTRUCTION JOINT – GRID 6–32

Scale: 3/4" = 1'–0"

SYM	DESCRIPTION	DATE	APPR
---	---	---	---
---	---	---	---
---	---	---	---
---	---	---	---
---	---	---	---
---	---	---	---
---	---	---	---

SEAL

A/E INFO

APPROVED

FOR COMMANDER NAVFAC / B.L.T.L.

ACTIVITY

SATISFACTORY TO DATE

DES DAS DRW DAS CHK KW

PROJECT MANAGER H. KING

IPT TECH. BRANCH HEAD S. ZAVOYSKI

CHIEF ENG/ARCH (CORE) KW

DEPARTMENT OF THE NAVY
NAVAL FACILITIES ENGINEERING COMMAND
NAVAL FACILITIES ENGINEERING COMMAND SOUTHEAST
NAVAL AIR STATION JACKSONVILLE
IPT SOUTH ATLANTIC
AUTEC SITE 1
ANDROS ISLAND, BAHAMAS

PIER 1902 REPAIRS

REPAIR DETAILS

SCALE: SCALE

EPROJECT NO.: 1302903

CONSTR. CONTR. NO. N69450–XX–C–XXXX

NAVFAC DRAWING NO. 15079075

SHEET 50 OF 56

S603

DRAWFORM REVISION: 7 AUGUST 2009

SHEET FORMAT IS 22" X 34". IF PRINTED SHEET IS NOT 22" X 34", THEN IT IS NOT TO SCALE

FILE NAME: P:\CIBL\project_files\FLORIDA\vaa key west ii\hjr00213\autec pier repairs~1302903\working technical files\dwgs\Sheet Files\3 – STRU1902-S-603.dwg LAYOUT NAME: 1902-S-603 PLOTTED: Thursday, February 19, 2015 – 3:47pm USER: douglas.szilagyi

ABBREVIATIONS LEGEND

A
A – AMPERE
AC – ALTERNATING CURRENT
ACT – ABOVE COUNTER TOP
ADA – AMERICANS W/ DISABILITIES ACT
ADMIN – ADMINISTRATION
AF – AMP FRAME, AMP FUSE
AFCI – ARC FAULT CIRCUIT INTERRUPTER
AFF – ABOVE FINISH FLOOR
AFG – ABOVE FINISH GRADE
AGU – AUTOMATIC GAIN CONTROL
AHU – AIR HANDLING UNIT
AI – ANALOG INPUT
AL – ALUMINUM
ALT – ALTERNATE
ALM – ALARM
ANN – ANNUNCIATOR
ANSI – AMERICAN NATIONAL STANDARDS INSTITUTE
AO – ANALOG OUTPUT
APPROX – APPROXIMATE
ASTM – AMERICAN SOCIETY FOR TESTING AND MATERIALS
AT – AMP TRIP OR AMP TAP
ATC – AUTOMATIC TEMP. CONTROL
ATS – AUTOMATIC TRANSFER SWITCH
AUTO – AUTOMATIC
AUX – AUXILIARY
AWG – AMERICAN WIRE GAGE

B
BLDG – BUILDING
BLW – BELOW
BM – BEAM
BMS – BUILDING MANAGEMENT SYSTEM
BRG – BEARING

C
C – CONDUIT
CAB – CABINET
CAP – CAPACITY
CATV – COMMUNITY ANTENNA TELEVISION SYSTEM
CB, CKT BKR – CIRCUIT BREAKER
CCTV – CLOSED CIRCUIT TELEVISION
CEF – CEILING EXHAUST FAN
CH – CHILLER
CHWP – CHILLED WATER PUMP
CKT – CIRCUIT
CL – CENTER LINE
CL – CLASS
CLF – CURRENT LIMITING FUSE
CLG – CEILING
CLR – CLEAR
CMU – CONCRETE MASONRY UNIT
COL – COLUMN
CONSTR – CONSTRUCTION
CORR – CORRIDOR
CS – CONTROL SWITCH
CT – CURRENT TRANSFORMER
CTR – CENTER
CU – COPPER
CUH – CABINET UNIT HEATER

D
DC – DIRECT CURRENT
DEMO – DEMOLITION
DEPT – DEPARTMENT
DET – DETECTOR
DI – DIGITAL INPUT
DIA – DIAMETER
DIFF – DIFFUSER
DIM – DIMENSION
DIST PNL – DISTRIBUTION PANEL
DIV – DIVISION
DN – DOWN
DO – DIGITAL OUTPUT
DPDT – DOUBLE POLE DOUBLE THROW
DR – DOOR

E
EA – EACH
EF – EXHAUST FAN
EL – ELEVATION
ELEC – ELECTRIC
ELEV – ELEVATOR
ELU – EMERGENCY LIGHTING UNIT
EM – EMERGENCY
EMCS – ENERGY MANAGEMENT CONTROL SYSTEM
EMT – ELECTRICAL METALLIC TUBING
ENCL – ENCLOSURE
EOL – END OF LINE
EPO – EMERGENCY POWER OFF
EPRF – EXPLOSION PROOF
EQ – EQUAL
EQUIP – EQUIPMENT
ES – ENERGY SAVING
EUH – ELECTRIC UNIT HEATER
EWC – ELECTRIC WATER COOLER
EX, EXTG – EXISTING
EXT – EXTERIOR

F
FACP – FIRE ALARM CONTROL PANEL
FCU – FAN COIL UNIT
FDR – FEEDER
FDTN – FOUNDATION
FHP – FULL HEIGHT PARTITION
FLL – FLOW LINE
FLR – FLOOR
FLEX – FLEXIBLE
FLG – FLANGE
FLUOR – FLUORESCENT
FO – FIBER OPTIC
FP – FIREPROOF
FRMG – FRAMING
FRP – FIBER REINFORCED PLASTIC
FS – FUSIBLE SWITCH
FT – FOOT (or) FEET
FUT – FUTURE

G
GA – GAUGE
GALV – GALVANIZED
GC – GENERAL CONTRACTOR
GEN – GENERATOR
GFCI – GOVERNMENT FURNISHED CONTRACTOR INSTALLED
GFI – GROUND FAULT INTERRUPTER
GRD – GROUND
GWB – GYPSUM WALL BOARD

H
HOA – HAND–OFF–AUTO
HDCP – HANDICAP
HDR – HEADER
HDW – HARDWARE
HID – HIGH INTENSITY DISCHARGE
HORIZ – HORIZONTAL
HP – HORSEPOWER
HPS – HIGH PRESSURE SODIUM
HT – HEIGHT
HUH – HORIZONTAL UNIT HEATER
HVAC – HEATING, VENTILATING, AND AIR CONDITIONING
HWP – HOT WATER PUMP
HZ – FREQUENCY IN CYCLES PER SECOND

I
IC – INTERCOMMUNICATION
ID – INSIDE DIAMETER
IDS – INTRUSION DETECTION SYSTEM
IEEE – IEEE (FORMERLY INSTITUTE OF ELECTRICAL AND ELECTRONICS ENGINEERS)
IMS – INFORMATION MANAGEMENT SYSTEM
INSUL – INSULATION
INT – INTERIOR

J
JB – JUNCTION BOX

K
KCMIL – THOUSAND CIRCULAR MILS
KO – KNOCK OUT
KV – KILOVOLT
KVA – KILOVOLT AMPERES
KVAR – KILOVAR
KW – KILOWATT
KWH – KILOWATT HOURS

L
LAV – LAVATORY
LAN – LOCAL AREA NETWORK
LCD – LINEAR CEILING DIFFUSER
LED – LIGHT EMITTING DIODE
LIN – LINEAR
LM – LUMEN
LOC – LOCATION
LP – LIGHTING PANELBOARD
LSIG – LONG, SHORT, INSTANTANEOUS, GROUND FAULT OPTIONS
LTG – LIGHTING
LVR – LOUVER

M
MAN – MANUAL
MATL – MATERIAL
MAX – MAXIMUM
MC – METAL CLAD CABLE
MCC – MOTOR CONTROL CENTER
MCB – MAIN CIRCUIT BREAKER
MCM – THOUSAND CIRCULAR MILS
MDP – MAIN DISTRIBUTION PANEL
MDS – MAIN DISTRIBUTION SWITCHBOARD
MECH – MECHANICAL
MFR – MANUFACTURER
MIN – MINIMUM
MISC – MISCELLANEOUS
MLO – MAIN LUGS ONLY
MOD – MOTOR OPERATED DAMPER
MSB – MAIN SWITCHBOARD
MSG – MAIN SWITCHGEAR
MTD – MOUNTED

N
NA – NOT APPLICABLE
NAC – NOTIFICATION APPLIANCE CIRCUIT EXTENDER
NDU – NETWORK DISPLAY UNIT
NE – NORMAL EMERGENCY
NEC – NATIONAL ELECTRICAL CODE
NEMA – NATIONAL ELECTRICAL MANUFACTURERS ASSOCIATION
NEUT – NEUTRAL
NF – NON–FUSED
NFS – NON–FUSED SWITCH
NIC – NOT IN CONTRACT
NL – NIGHT LIGHT
NMCI – NAVY MARINE CORPS INTRANET
NO – NUMBER
NPT – NATIONAL PIPE THREAD
NPU – NETWORK PROCESSING UNIT
NTS – NOT TO SCALE

O
OC – ON CENTER
OD – OUTSIDE DIAMETER
OH – OVERHEAD

P
PAP – PRE ACTION PANEL
PB – PULL BOX
PC – PLUMBING CONTRACTOR
PL – PILOT LIGHT
PLC – PROGRAMMABLE LOGIC CONTROLLER
PNL, PANEL – PANELBOARD
PP – POWER PANELBOARD
PR – PAIR
PRI – PRIMARY
PRV – POWER ROOF VENTILATOR
PRESS – PRESSURE
PV – PHOTOVOLTAIC
PVC – POLYVINYL CHLORIDE (SCHED 40 UON)

R
R – RELAY
REC – RECESSED
RECP – RECEPTACLE
REQD – REQUIRED
REV – REVISION
RGS – RIGID GALVANIZED STEEL CONDUIT
PSI – POUNDS PER SQUARE INCH
RTU – ROOF TOP UNIT

S
SAPF – SPECIAL ACCESS PROGRAM FACILITY
SCHED – SCHEDULE
SCC – STATUS COMMAND CENTER
SCIF – SENSITIVE COMPARTMENTED INFORMATION FACILITY
SD – SHUTDOWN
SDMPR – SMOKE DAMPER
SEC – SECONDARY
SECT – SECTION
SF – SQUARE FOOT
SIM – SIMILAR
SLC – SIGNAL LINE CIRCUIT
SMK – SMOKE
SMS – SECURITY MANAGEMENT SYSTEM
SMR – SURFACE MOUNTED RACEWAY
SP – STANDPIPE
SPECS – SPECIFICATIONS
SPD – SURGE PROTECTIVE DEVICE
ST – SHUNT STRIP
STD – STANDARD
STR – STARTER
SUPV – SUPERVISORY
SUSP – SUSPEND
SW – SWITCH
SWBD – SWITCHBOARD
SWGR – SWITCHGEAR

T
T – TREAD
TBD – TO BE DETERMINED
TEL – TELEPHONE
TELECOM – TELECOMMUNICATIONS
TEMP – TEMPORARY
TERM – TERMINAL
TV – TELEVISION
TP – TWISTED PAIR
TSP – TYPICAL SHIELDED PAIR
TYP – TYPICAL

U
UFC – UNIFORM FACILITIES CRITERIA
UG – UNDERGROUND
UHF – ULTRA HIGH FREQUENCY
UL – UNDERWRITERS LABORATORY
UON – UNLESS OTHERWISE NOTED

V
V – VOLT
VFD – VARIABLE FREQUENCY DRIVE

W
W – WATT
W/ – WITH
W/O – WITHOUT
WH – WALL HYDRANT
WP – WATERPROOF

X
XFMR – TRANSFORMER
XP – EXPLOSION PROOF

ELECTRICAL SYMBOLS LEGEND
SCALE: 1/8" = 1'–0"

LIGHTING SYMBOLS LEGEND

NOTE: SEE FIXTURE SCHEDULE FOR MARK REFERENCES, SHEET E701

- FLUORESCENT WRAPAROUND FIXTURE, MARK 'A' SEE FIXTURE SCHEDULE
- INDUSTRIAL FLUORESCENT STRIP FIXTURE, MARK 'B' SEE FIXTURE SCHEDULE
- INDUSTRIAL FLUOR. STRIP FIXTURE, MARK 'B' WITH EMER. BATT. PACK 1100 LUMEN MINIMUM
- PENDANT MOUNTED INDIRECT/OPEN LINEAR FLUOR. FIXTURE, MARK 'C' SEE FIXTURE SCHEDULE
- PENDANT MOUNTED INDIRECT/OPEN LINEAR FLUORESCENT FIXTURE, MARK 'C' WITH EMERGENCY BATTERY PACK 1100 LUMEN MINIMUM
- FIBERGLASS HOUSING DAMP/WET LOCATION FLUOR. FIXTURE, MARK 'D' SEE FIXTURE SCHEDULE
- FIBERGLASS HOUSING DAMP/WET LOCATION FLUORESCENT FIXTURE, MARK 'D' WITH EMERGENCY BATTERY PACK 1100 LUMEN MINIMUM
- INDIRECT WALL MOUNTED FLUORESCENT FIXTURE. MARK 'E' SEE FIXTURE SCHEDULE
- INDIRECT WALL MOUNTED FLUORESCENT FIXTURE. MARK 'E' WITH EMERGENCY BATTERY PACK 1100 LUMEN MINIMUM
- WALL MOUNTED STAIR FLUORESCENT FIXTURE. MARK 'M' WITH EMERGENCY BATTERY PACK 1100 LUMEN MINIMUM, INTEGRAL OCC. SENSOR
- RECESSED LED DOWNLIGHT FIXTURE, MARK 'F' SEE FIXTURE SCHEDULE
- EXIT SIGN, CEILING OR WALL MOUNTED, MARK 'G' FACES ARE SOLID, ARROWS INDICATE EGRESS DIRECTION
- INTERIOR/EXTERIOR EMERGENCY LIGHTING UNIT, MARK 'H'
- LED FULL–CUTOFF WALLPACK FIXTURE, MARK 'J' SEE FIXTURE SCHEDULE
- DECORATIVE FLUORESCENT STRIP FIXTURE MOUNTED VERTICALLY, MARK 'K' WITH EMERGENCY BATTERY PACK 1100 LUMEN MINIMUM, INTEGRAL OCC. SENSOR
- FLUORESCENT VANITY STRIP FIXTURE MOUNTED ABOVE MIRROR, MARK 'L' 2' OR 4' AS INDICATED
- POLE MOUNTED LED SITE AND AREA LIGHT FIXTURE, MARK 'S(DISTRIBUTION)' DISTRIBUTION TYPE IS INDICATED IN (PARENTHESES) SEE FIXTURE SCHEDULE
- LED BOLLARD AREA LIGHT FIXTURE, MARK 'T' SEE FIXTURE SCHEDULE
- LED FLOOD LIGHT FIXTURE, MARK 'U' SEE FIXTURE SCHEDULE
- S – SWITCH, TOGGLE, WALL MOUNTED, 20A., 120/277V RATED (AC ONLY), SINGLE POLE SINGLE THROW. MOUNT 48" AFF TO BOTTOM OF BOX, UON
- S_3 – SWITCH, TOGGLE, WALL MOUNTED, 20A., 120/277V RATED (AC ONLY), THREE–WAY, (SINGLE POLE DOUBLE THROW). MOUNT 48" AFF TO BOTTOM OF BOX, UON
- S_4 – SWITCH, TOGGLE, WALL MOUNTED, 20A., 120/277V RATED (AC ONLY), FOUR–WAY, (SINGLE POLE DOUBLE THROW). MOUNT 48" AFF TO BOTTOM OF BOX, UON
- S_D – SWITCH, DIMMER, 120V, SIZE AND TYPE AS REQUIRED
- S_{3T} – SWITCH, TIMER CONTROLLED, DPDT, 16A, 120–277VAC, SIZE AND TYPE AS REQUIRED
- S_O – OCCUPANCY/VACANCY SENSOR, WALL MOUNTED, DUAL TECHNOLOGY, WITH BUILT–IN PHOTOCELL
- O – OCCUPANCY SENSOR, CEILING MOUNTED, DUAL TECH., WITH OPTIONAL RELAY AND PHOTOCELL
- R – OCCUPANCY SENSOR, RELAY/POWER PACK
- PC – PHOTOELECTRIC CELL
- CEILING MTD FAN, SEE SCHEDULE FOR DETAILS.

ORDNANCE GROUND SYMBOLS LEGEND

- STANDING AIR TERMINAL
- GROUND ROD IN WELL (GROUND WELL)
- GROUND PLATE
- GROUNDING CONDUCTOR; EXPOSED, DOWN, OR ROOF
- — G — GROUND RING (COUNTERPOISE OR GIRDLE); CONCEALED
- EGB – GROUNDING BUS BAR, IDENTIFIED; E–ELECTRICAL, T– COMMUNICATION

POWER SYMBOLS LEGEND

- RECEPTACLE, SIMPLEX, NEMA 5–20R, 18" AFF TO BOTTOM OF BOX, UON
- RECEPTACLE, DUPLEX, NEMA 5–20R, 18" AFF TO BOTTOM OF BOX, UON
- RECEPTACLE, QUADRUPLEX, NEMA 5–20R, 18" AFF TO BOTTOM OF BOX, UON
- X – RECEPTACLE, SINGLE, SPECIAL PURPOSE, MOUNTED 18" AFF TO BOTTOM OF BOX, UON. NUMBER IN POSITION "X" INDICATES NEMA TYPE
- RECEPTACLE, FLOOR MOUNTED DUPLEX OUTLET, NEMA 5–20R
- J – JUNCTION BOX, CEILING MOUNTED
- J – JUNCTION BOX, FLOOR MOUNTED
- J – JUNCTION BOX, WALL MOUNTED
- PUSH BUTTON, WALL MOUNTED
- VFD – VARIABLE FREQUENCY DRIVE
- P/AA/BB/N – SWITCH, NON–FUSED DISCONNECT, 'P' DENOTES NUMBER OF POLES; 'AA' DENOTES DISCONNECT SIZE; 'BB' IS ENCLOSED BREAKER RATING; N IS NEMA ENCLOSURE TYPE (OMIT IF NEMA 1)
- COMBINATION MOTOR STARTER/DISCONNECT SWITCH, SURFACE MOUNTED
- S_M – MOTOR RATED SWITCH, 2–POLE, 20A (WITH OVERLOADS)
- PANELBOARD, 480Y/277V
- PANELBOARD, 208Y/120V
- PANELBOARD, 120/240V
- PANELBOARD, RECESSED WITH COPPER BUS
- SWITCHBOARD, SYMBOL SIZE INDICATES MAXIMUM EQUIPMENT SIZE
- CONDUIT STUB OUT BELOW GROUND, CAPPED, UON
- WIRING IN CONDUIT, RUN CONCEALED IN SLAB OR UNDERGROUND
- WIRING IN CONDUIT, RUN CONCEALED ABOVE CEILING OR IN WALLS
- WIRING IN CONDUIT, RUN EXPOSED
- M X – MOTOR LOAD, HORSEPOWER SHOWN IN POSITION "X"
- S, W–X,Y,Z – CONDUIT AND CONDUCTORS. NO HASH MARKS INDICATE TWO CONDUCTORS PLUS GROUND, 3 HASH MARKS INDICATE THREE CONDUCTORS PLUS GROUND, ETC. GREATER THAN NO 12 AWG ARE NOTED AT POSITION "S" ALL CIRCUITS CONTAIN GROUND PER NEC. ARROW HEAD INDICATES HOME RUN TO PANEL W, CIRCUITS X,Y AND Z

SITE PLAN SYMBOLS LEGEND

- OE – OVERHEAD ELECTRICAL LINE
- UGE – UNDERGROUND ELECTRICAL LINE
- OT – OVERHEAD TELEPHONE LINE
- UGT – UNDERGROUND TELEPHONE LINE
- OF – OVERHEAD FIBER OPTIC LINE
- UGF – UNDERGROUND FIBER OPTIC LINE
- OC – OVERHEAD CATV LINE
- UGC – UNDERGROUND CATV LINE
- WOOD POLE – INDICATE POWER POLE SERVICE FOR PP–POWER POLE, TP–TELPHONE POLE, LP– LIGHTING POLE, CP–CATV POLE
- CONCRETE POLE – INDICATE POWER POLE SERVICE FOR PP–POWER POLE, TP–TELPHONE POLE, LP– LIGHTING POLE, CP–CATV POLE
- METAL LIGHTING POLE
- POLE MOUNTED LUMINAIRE, INDICATE FIXTURE TYPE; MH–METAL HALLIDE, MV– MERCURY VAPOR, HPS– HIGH PRESSURE SODIUM, LD– LED
- DOWN GUY WIRE
- POLE MOUNTED TRANSFORMER, INDICATE PHASE CONFIGURATION, CAPACITY
- T – PAD MOUNTED TRANSFORMER, INDICATE PHASE CONFIGURATION, CAPACITY
- EMH – CONCRETE PRE–CAST MANHOLE, INDICATE EMH– ELECTRICAL MANHOLE, CMH– COMMUNICATION MANHOLE.
- EHH – CONCRETE PRE–CAST HANDHOLE, INDICATE EHH– ELECTRICAL HANDHOLE, CHH– COMMUNICATION HANDHOLE, LHH–LIGHTING HANHOLE, ETC.
- PEDESTAL, INDICATE; EP– ELECTRICAL, CP– COMMUNICATION
- PB – SPLICE OR PULL BOX ABOVE GROUND. INDICATE; PB– PULL BOX, SB– SPLICE BOX
- S – PAD MOUNTED SF6, SWITCHING UNIT INDICATE THE NUMBER OF WAYS

ELECTRICAL GENERAL NOTES
SCALE: NTS

1. ALL ELECTRICAL WORK SHALL BE IN ACCORDANCE WITH THE APPLICABLE EDITION OF THE NATIONAL ELECTRICAL CODE (NFPA 70), UFC 3–550–01, UFC 4–150–02, AND ALL OTHER APPLICABLE CODES.
2. ALL MATERIAL SHALL BE NEW AND SHALL CONFORM TO THE STANDARDS OF THE UNDERWRITER'S LABORATORIES, INC., AND THE NATIONAL ELECTRICAL MANUFACTURERS ASSOCIATION.
3. DRAWINGS ARE DIAGRAMMATIC ONLY AND INDICATE ONLY THE GENERAL ARRANGEMENT. SEE CIVIL DRAWINGS FOR EXACT DIMENSIONS.
4. ELECTRICAL CONTRACTOR SHALL MAKE ALL ELECTRICAL POWER CONNECTIONS TO HVAC, PLUMBING, AND OTHER EQUIPMENT AS REQUIRED.
5. A COMPLETE GROUNDING SYSTEM SHALL BE PROVIDED AND INSTALLED IN ACCORDANCE WITH ARTICLE 250 OF THE NEC, NAVSEA OP5, AND AS SHOWN ON THE DRAWINGS.
6. ALL SPLICE CONNECTIONS TO THE GROUNDING GIRDLE SHALL BE MADE USING EXOTHERMIC WELDS. ALL SPLICE CONNECTIONS TO THE ORDNANCE GROUND ON THE PIER SHALL BE MADE USING MECHANICAL LUGS. SEE NAVSEA OP5, CHAPTER 5 FOR GROUNDING CONNECTIONS AND TESTING PROCEDURES.
7. THE ELECTRICAL CONTRACTOR SHALL BE RESPONSIBLE FOR PROTECTING ALL ELECTRICAL CABLE AND EQUIPMENT FROM DAMAGE AND FOREIGN MATERIAL DURING CONSTRUCTION (PAINT, SPACKLE, ETC.).
8. THE ORDNANCE GROUNDING CONDUCTOR SHALL BE MINIMUM #1/0 COPPER CABLE. THE DOWN CONDUCTOR SHALL BE MINIMUM #1/0 COPPER CONDUCTOR, TYPE RHW–2 INSULATION. ALL ORDNANCE GROUNDING CABLE INSTALLED ALONG THE CURB ON THE PIER SHALL BE STRAPPED PER NEC.
9. ORDNANCE GROUND SHALL BE INSTALLED AS A BARE CONDUCTOR ALONG PIER AND SHALL NOT BE PAINTED.
10. THIS SHEET IS A STANDARD SHEET. CERTAIN SYMBOLS AND ABBREVIATIONS INDICATED ON THIS SHEET MAY NOT APPEAR ON THE DRAWINGS.
11. THE ELECTRICAL CONTRACTOR SHALL COORDINATE ALL WORK WITH THE CONTRACTING OFFICER DURING CONSTRUCTION.

ELECTRICAL DEMOLITION NOTES
SCALE: NTS

1. THE EXISTING PIER ELECTRICAL AND COMMUNICATION SYSTEM IS TO BE MAINTAINED DURING ALL PHASES OF CONSTRUCTION. REFERENCE THE ELECTRICAL DEMOLITION PLANS FOR THE EXTENT OF UTILITY DEMOLITION AS PORTIONS OF THE EXISTING ELECTRICAL AND COMMUNICATIONS UTILITY INFRASTRUCTURE ARE TO REMAIN.
2. DEMOLITION ITEMS ARE BASED ON EXISTING PLANS AND FIELD INVESTIGATION. THE CONTRACTOR SHALL VISIT THE EXISTING PIER AND FACILITIES PRIOR TO BID AND SHALL FAMILIARIZE THEMSELVES WITH THE EXISTING CONDITIONS IN ORDER TO AVOID CONFLICTS. DURING DEMOLITION, THE CONTRACTOR SHALL VERIFY ALL AFFECTED UTILITIES IN ORDER TO ENSURE THE CONTINUITY OF EXISTING UTILITIES THAT SERVE ADJACENT FACILITIES.
3. THE CONTRACTOR SHALL PERFORM LOCK–OUT & TAG–OUT PROCEDURES AS SPECIFIED BY THE CONTRACTING OFFICER DURING CONSTRUCTION. ALL SYSTEMS LOCKED AND TAGGED DURING CONSTRUCTION SHALL BE TESTED TO VERIFY THEY ARE STILL IN PROPER WORKING CONDITION WHEN CONSTRUCTION IS COMPLETE.
4. THE CONTRACTOR SHALL ONLY REMOVE THOSE ELECTRICAL APPURTENANCES (DISCONNECTS, SWITCHES, MOTOR STARTERS, WIRE, CONDUIT, ETC.) SPECIFIED BY THE DEMOLITION PLANS UNDER THIS CONTRACT. COORDINATE WITH OTHER DISCIPLINES AS NEEDED DURING CONSTRUCTION.
5. THE CONTRACTOR SHALL EXERCISE CARE IN THE REMOVAL OF DEMOLISHED ITEMS. THE CONTRACTOR SHALL REPAIR, AT THEIR OWN COST, ANY DAMAGE CAUSED TO EXISTING CONSTRUCTION AND/OR EQUIPMENT TO REMAIN.

PANELBOARD NUMBERING
SCALE: NTS

LP 1 A–1

PANEL PURPOSE
PP – POWER
LP – LIGHTING
E** – EMERGENCY PREFIX
LS** – LIFE SAFETY PREFIX

PANEL LOCATED ON FLOOR NUMBER
1 – FIRST
2 – SECOND
3 – THIRD
ETC

FOR CIRCUITRY INCLUDE BREAKER NUMBER
1
2
3
4
5
ETC

SEQUENCE PANEL NUMBER PER FLR
A – FIRST
B – SECOND
C – THIRD
ETC

SYM | DESCRIPTION | DATE | APPR

SEAL

A/E INFO

APPROVED
FOR COMMANDER NAVFAC / B.L.T.L.
ACTIVITY
SATISFACTORY TO DATE

DES CRD | DRW CRD | CHK RHF
PROJECT MANAGER H. KING
IPT TECH. BRANCH HEAD S. ZAVOYSKI
CHIEF ENG/ARCH (CORE) R. FLORES

DEPARTMENT OF THE NAVY
NAVAL FACILITIES ENGINEERING COMMAND
NAVAL FACILITIES ENGINEERING COMMAND SOUTHEAST
NAVAL AIR STATION JACKSONVILLE
IPT SOUTH ATLANTIC
AUTEC SITE 1 ANDROS ISLAND, BAHAMAS
PIER 1902 REPAIRS
GENERAL NOTES SYMBOLS AND LEGENDS

SCALE: SCALE
EPROJECT NO.: 1302903
CONSTR. CONTR. NO. N69450–XX–C–XXXX
NAVFAC DRAWING NO. 15079076
SHEET 51 OF 56
E001

DRAWFORM REVISION: 7 AUGUST 2009

FILE NAME: P:\CIBL\project_files\FLORIDA\nas key west fl}h}n00213\autec pier repairs~1302903\working technical files\Dwgs\Sheet Files\9 – ELECE001 GENERAL NOTES SYMBOLS AND LEGENDS.dwg LAYOUT NAME: E001 GENERAL NOTES SYMBOLS AND LEGENDS PLOTTED: Monday, March 02, 2015 – 5:51pm USER: christopher.duguid

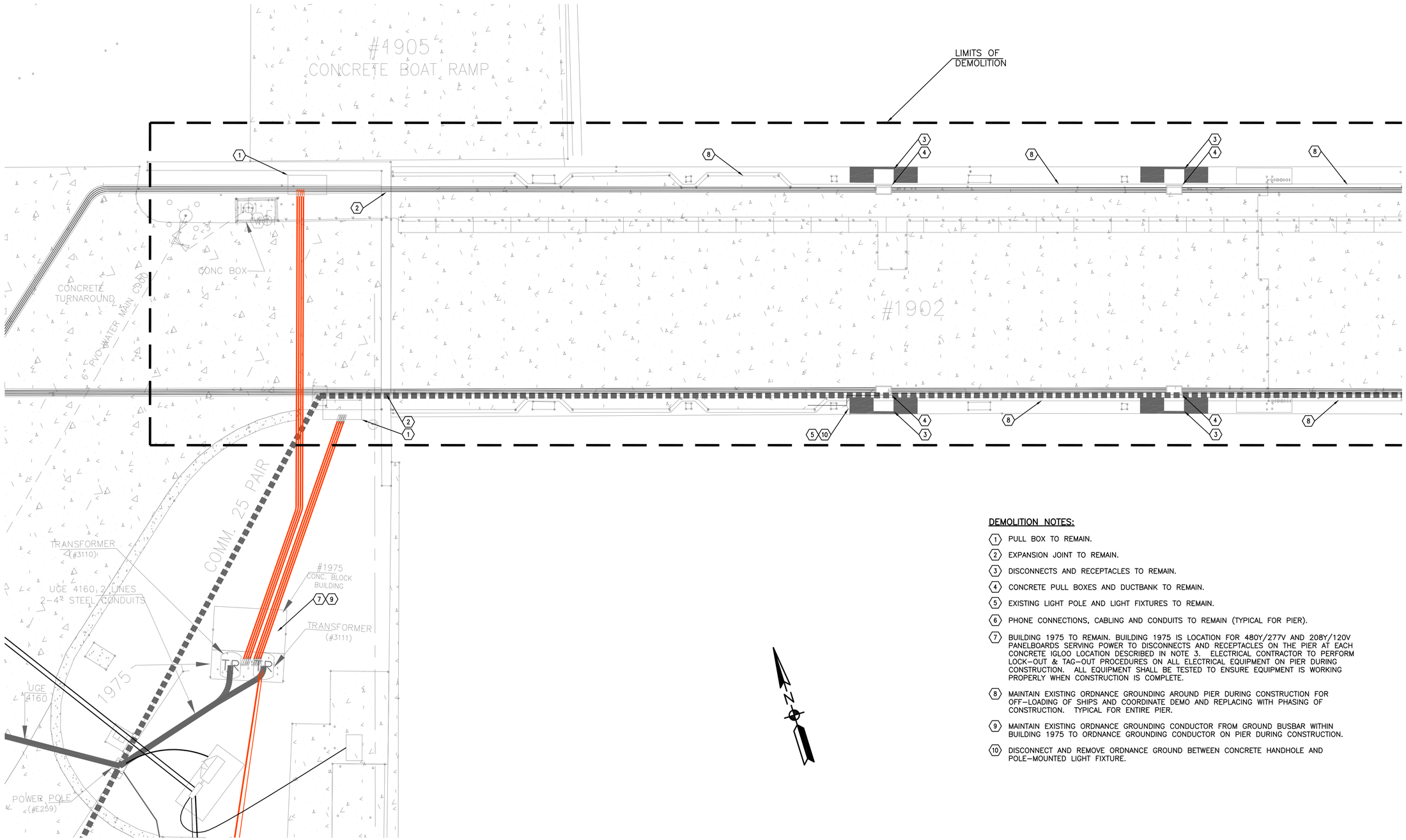

1 DEMOLITION PLAN
Scale: 1" = 10'

DEMOLITION NOTES:

1. PULL BOX TO REMAIN.
2. EXPANSION JOINT TO REMAIN.
3. DISCONNECTS AND RECEPTACLES TO REMAIN.
4. CONCRETE PULL BOXES AND DUCTBANK TO REMAIN.
5. EXISTING LIGHT POLE AND LIGHT FIXTURES TO REMAIN.
6. PHONE CONNECTIONS, CABLING AND CONDUITS TO REMAIN (TYPICAL FOR PIER).
7. BUILDING 1975 TO REMAIN. BUILDING 1975 IS LOCATION FOR 480Y/277V AND 208Y/120V PANELBOARDS SERVING POWER TO DISCONNECTS AND RECEPTACLES ON THE PIER AT EACH CONCRETE IGLOO LOCATION DESCRIBED IN NOTE 3. ELECTRICAL CONTRACTOR TO PERFORM LOCK-OUT & TAG-OUT PROCEDURES ON ALL ELECTRICAL EQUIPMENT ON PIER DURING CONSTRUCTION. ALL EQUIPMENT SHALL BE TESTED TO ENSURE EQUIPMENT IS WORKING PROPERLY WHEN CONSTRUCTION IS COMPLETE.
8. MAINTAIN EXISTING ORDNANCE GROUNDING AROUND PIER DURING CONSTRUCTION FOR OFF-LOADING OF SHIPS AND COORDINATE DEMO AND REPLACING WITH PHASING OF CONSTRUCTION. TYPICAL FOR ENTIRE PIER.
9. MAINTAIN EXISTING ORDNANCE GROUNDING CONDUCTOR FROM GROUND BUSBAR WITHIN BUILDING 1975 TO ORDNANCE GROUNDING CONDUCTOR ON PIER DURING CONSTRUCTION.
10. DISCONNECT AND REMOVE ORDNANCE GROUND BETWEEN CONCRETE HANDHOLE AND POLE-MOUNTED LIGHT FIXTURE.

1"=10' 0' 10' 20' 30' 40' 50'

SYM	DESCRIPTION	DATE	APPR

NAVFAC

SEAL

A/E INFO

APPROVED

FOR COMMANDER NAVFAC / B.L.T.L.

ACTIVITY

SUBJECT TO DATE

DES CRD	DRW CRD	CHK RHF	
PROJECT MANAGER	H. KING		
IPT TECH. BRANCH HEAD	S. ZAVOYSKI		
CHIEF ENG/ARCH (CORE)	R. FLORES		

DEPARTMENT OF THE NAVY
NAVAL FACILITIES ENGINEERING COMMAND
NAVAL FACILITIES ENGINEERING COMMAND SOUTHEAST
IPT SOUTH ATLANTIC
NAVAL AIR STATION JACKSONVILLE
AUTEC SITE 1
ANDROS ISLAND, BAHAMAS

PIER 1902 REPAIRS

DEMOLITION PLAN

SCALE: SCALE
EPROJECT NO.: 1302903
CONSTR. CONTR. NO. N69450-XX-C-XXXX
NAVFAC DRAWING NO. 15079077
SHEET 52 OF 56
ED101

DRAWFORM REVISION: 7 AUGUST 2009

FILE NAME: P:\CIBL\project_files\FLORIDA\nas key west fl\hjn00213\autec pier repairs-1302903\working technical files\Dwgs\Sheet Files\9 - ELECED101 DEMOLITION PLAN.dwg LAYOUT NAME: ED101 DEMOLITION PLAN PLOTTED: Monday, March 02, 2015 - 6:49pm USER: christopher.duguid

SHEET FORMAT IS 22" X 34". IF PRINTED SHEET IS NOT 22" X 34", THEN IT IS NOT TO SCALE

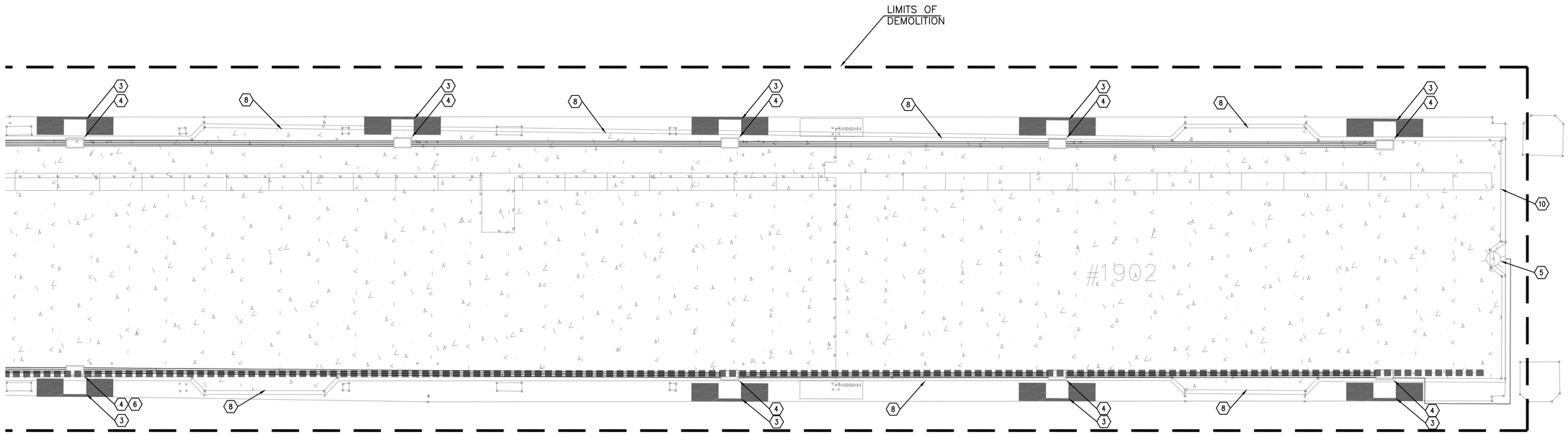

DEMOLITION NOTES:

1. PULL BOX TO REMAIN.
2. EXPANSION JOINT TO REMAIN.
3. DISCONNECTS AND RECEPTACLES TO REMAIN.
4. CONCRETE PULL BOXES AND DUCTBANK TO REMAIN.
5. EXISTING LIGHT POLE AND LIGHT FIXTURES TO REMAIN.
6. PHONE CONNECTIONS, CABLING AND CONDUITS TO REMAIN (TYPICAL FOR PIER).
7. BUILDING 1975 TO REMAIN. BUILDING 1975 IS LOCATION FOR 480Y/277V AND 208Y/120V PANELBOARDS SERVING POWER TO DISCONNECTS AND RECEPTACLES ON THE PIER AT EACH CONCRETE IGLOO LOCATION DESCRIBED IN NOTE 3. ELECTRICAL CONTRACTOR TO PERFORM LOCK-OUT & TAG-OUT PROCEDURES ON ALL ELECTRICAL EQUIPMENT ON PIER DURING CONSTRUCTION. ALL EQUIPMENT SHALL BE TESTED TO ENSURE EQUIPMENT IS WORKING PROPERLY WHEN CONSTRUCTION IS COMPLETE.
8. MAINTAIN EXISTING ORDNANCE GROUNDING AROUND PIER DURING CONSTRUCTION FOR OFF-LOADING OF SHIPS AND COORDINATE DEMO AND REPLACING WITH PHASING OF CONSTRUCTION. TYPICAL FOR ENTIRE PIER.
9. MAINTAIN EXISTING ORDNANCE GROUNDING CONDUCTOR FROM GROUND BUSBAR WITHIN BUILDING 1975 TO ORDNANCE GROUNDING CONDUCTOR ON PIER DURING CONSTRUCTION.
10. DISCONNECT AND REMOVE ORDNANCE GROUND BETWEEN CONCRETE HANDHOLE AND POLE-MOUNTED LIGHT FIXTURE.

2 DEMOLITION PLAN
Scale: 1" = 10'

1"=10' 0' 10' 20' 30' 40' 50'

SYM	DESCRIPTION	DATE	APPR

NAVFAC

SEAL

A/E INFO

APPROVED

FOR COMMANDER NAVFAC / B.L.T.L.

ACTIVITY

CONSTRUCTION TO DATE

DES	CRD	DRW	CRD	CHK	RHF

PROJECT MANAGER H. KING
IPT TECH. BRANCH HEAD S. ZAVOYSKI
CHIEF ENG/ARCH (CORE) R. FLORES

DEPARTMENT OF THE NAVY
NAVAL FACILITIES ENGINEERING COMMAND
IPT SOUTH ATLANTIC
NAVAL FACILITIES ENGINEERING COMMAND SOUTHEAST
NAVAL AIR STATION JACKSONVILLE
AUTEC SITE 1
ANDROS ISLAND, BAHAMAS

PIER 1902 REPAIRS

DEMOLITION PLAN

SCALE: SCALE
EPROJECT NO.: 1302903
CONSTR. CONTR. NO. N69450-XX-C-XXXX
NAVFAC DRAWING NO. 15079078
SHEET 53 OF 56
ED102

DRAWFORM REVISION: 7 AUGUST 2009

FILE NAME: P:\CIBL\project_files\FLORIDA\nas key west fl\hjn00213\autec pier repairs-1302903\working technical files\Dwgs\Sheet Files\9 - ELECED102 DEMOLITION PLAN.dwg LAYOUT NAME: ED102 DEMOLITION PLAN PLOTTED: Monday, March 02, 2015 - 6:51pm USER: christopher.duguid

SHEET FORMAT IS 22" X 34". IF PRINTED SHEET IS NOT 22" X 34", THEN IT IS NOT TO SCALE

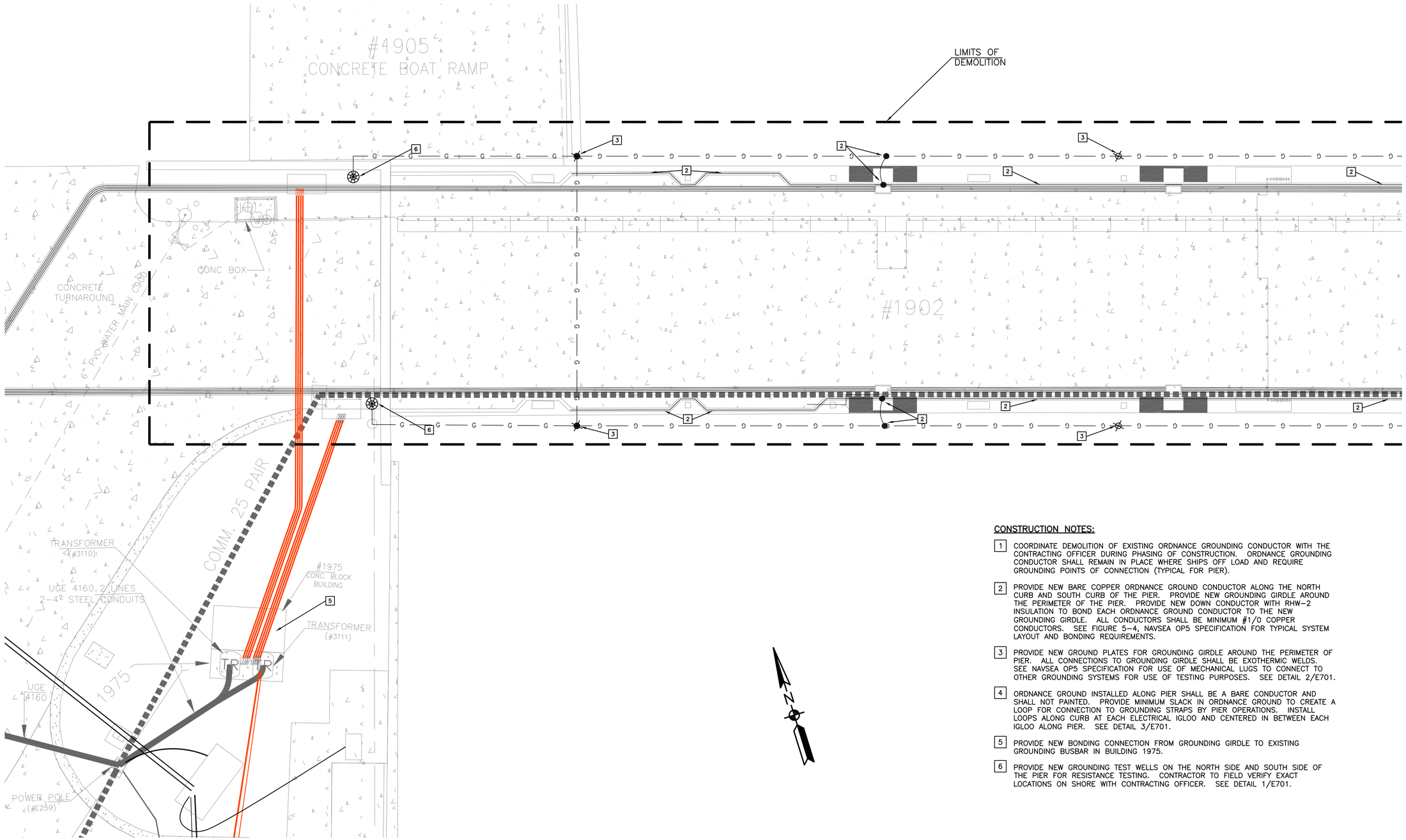

1 SITE PLAN
Scale: 1" = 10'

CONSTRUCTION NOTES:

1. COORDINATE DEMOLITION OF EXISTING ORDNANCE GROUNDING CONDUCTOR WITH THE CONTRACTING OFFICER DURING PHASING OF CONSTRUCTION. ORDNANCE GROUNDING CONDUCTOR SHALL REMAIN IN PLACE WHERE SHIPS OFF LOAD AND REQUIRE GROUNDING POINTS OF CONNECTION (TYPICAL FOR PIER).
2. PROVIDE NEW BARE COPPER ORDNANCE GROUND CONDUCTOR ALONG THE NORTH CURB AND SOUTH CURB OF THE PIER. PROVIDE NEW GROUNDING GIRDLE AROUND THE PERIMETER OF THE PIER. PROVIDE NEW DOWN CONDUCTOR WITH RHW-2 INSULATION TO BOND EACH ORDNANCE GROUND CONDUCTOR TO THE NEW GROUNDING GIRDLE. ALL CONDUCTORS SHALL BE MINIMUM #1/0 COPPER CONDUCTORS. SEE FIGURE 5-4, NAVSEA OP5 SPECIFICATION FOR TYPICAL SYSTEM LAYOUT AND BONDING REQUIREMENTS.
3. PROVIDE NEW GROUND PLATES FOR GROUNDING GIRDLE AROUND THE PERIMETER OF PIER. ALL CONNECTIONS TO GROUNDING GIRDLE SHALL BE EXOTHERMIC WELDS. SEE NAVSEA OP5 SPECIFICATION FOR USE OF MECHANICAL LUGS TO CONNECT TO OTHER GROUNDING SYSTEMS FOR USE OF TESTING PURPOSES. SEE DETAIL 2/E701.
4. ORDNANCE GROUND INSTALLED ALONG PIER SHALL BE A BARE CONDUCTOR AND SHALL NOT PAINTED. PROVIDE MINIMUM SLACK IN ORDNANCE GROUND TO CREATE A LOOP FOR CONNECTION TO GROUNDING STRAPS BY PIER OPERATIONS. INSTALL LOOPS ALONG CURB AT EACH ELECTRICAL IGLOO AND CENTERED IN BETWEEN EACH IGLOO ALONG PIER. SEE DETAIL 3/E701.
5. PROVIDE NEW BONDING CONNECTION FROM GROUNDING GIRDLE TO EXISTING GROUNDING BUSBAR IN BUILDING 1975.
6. PROVIDE NEW GROUNDING TEST WELLS ON THE NORTH SIDE AND SOUTH SIDE OF THE PIER FOR RESISTANCE TESTING. CONTRACTOR TO FIELD VERIFY EXACT LOCATIONS ON SHORE WITH CONTRACTING OFFICER. SEE DETAIL 1/E701.

1"=10' 0' 10' 20' 30' 40' 50'

SYM	DESCRIPTION	DATE	APPR

NAVFAC

SEAL

A/E INFO

APPROVED

FOR COMMANDER NAVFAC / B.L.T.L.

ACTIVITY

CONTRACTOR TO DATE

DES	CRD	DRW CRD	CHK RHF
PROJECT MANAGER	H. KING		
IPT TECH. BRANCH HEAD	S. ZAVOYSKI		
CHIEF ENG/ARCH (CORE)	R. FLORES		

DEPARTMENT OF THE NAVY
NAVAL FACILITIES ENGINEERING COMMAND
NAVAL FACILITIES ENGINEERING COMMAND SOUTHEAST
IPT SOUTH ATLANTIC
NAVAL AIR STATION JACKSONVILLE
AUTEC SITE 1
ANDROS ISLAND, BAHAMAS

PIER 1902 REPAIRS

SITE PLAN

SCALE: SCALE
EPROJECT NO.: 1302903
CONSTR. CONTR. NO. N69450-XX-C-XXXX
NAVFAC DRAWING NO. 15079079
SHEET 54 OF 56
ES101

DRAWFORM REVISION: 7 AUGUST 2009

SHEET FORMAT IS 22" X 34". IF PRINTED SHEET IS NOT 22" X 34", THEN IT IS NOT TO SCALE

FILE NAME: P:\CIBL\project_files\FLORIDA\nas key west fl\hjn00213\autec pier repairs-1302903\working technical files\Dwgs\Sheet Files\9 - ELECES101 SITE PLAN.dwg LAYOUT NAME: ES101 SITE PLAN PLOTTED: Monday, March 02, 2015 - 6:03pm USER: christopher.duguid

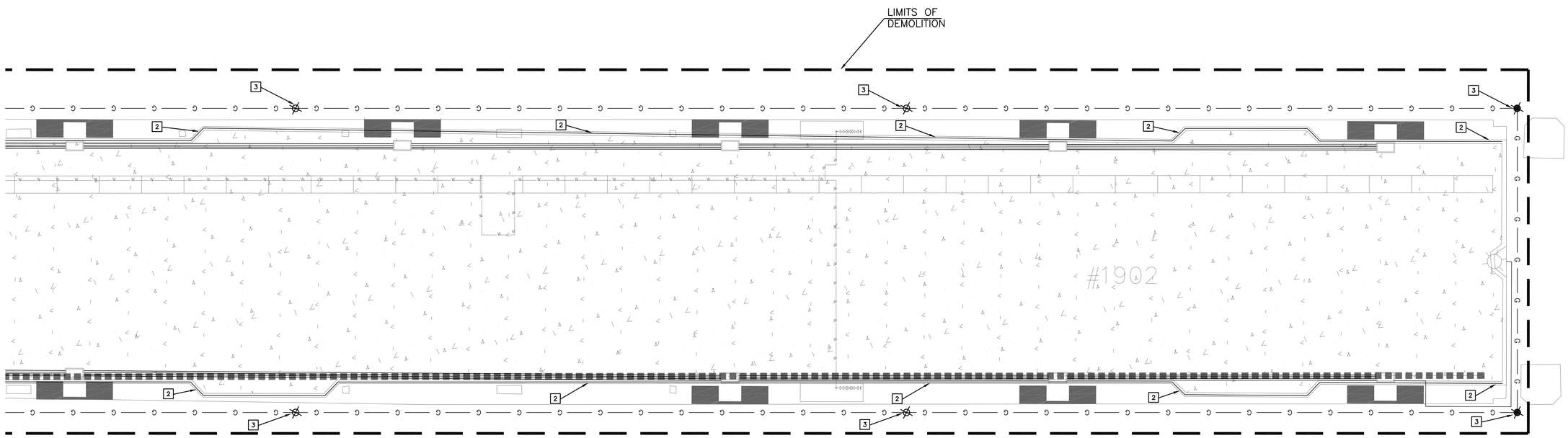

CONSTRUCTION NOTES:

1. COORDINATE DEMOLITION OF EXISTING ORDNANCE GROUNDING CONDUCTOR WITH THE CONTRACTING OFFICER DURING PHASING OF CONSTRUCTION. ORDNANCE GROUNDING CONDUCTOR SHALL REMAIN IN PLACE WHERE SHIPS OFF LOAD AND REQUIRE GROUNDING POINTS OF CONNECTION (TYPICAL FOR PIER).
2. PROVIDE NEW BARE COPPER ORDNANCE GROUND CONDUCTOR ALONG THE NORTH CURB AND SOUTH CURB OF THE PIER. PROVIDE NEW GROUNDING GIRDLE AROUND THE PERIMETER OF THE PIER. PROVIDE NEW DOWN CONDUCTOR WITH RHW-2 INSULATION TO BOND EACH ORDNANCE GROUND CONDUCTOR TO THE NEW GROUNDING GIRDLE. ALL CONDUCTORS SHALL BE MINIMUM #1/0 COPPER CONDUCTORS. SEE FIGURE 5-4, NAVSEA OP5 SPECIFICATION FOR TYPICAL SYSTEM LAYOUT AND BONDING REQUIREMENTS.
3. PROVIDE NEW GROUND PLATES FOR GROUNDING GIRDLE AROUND THE PERIMETER OF PIER. ALL CONNECTIONS TO GROUNDING GIRDLE SHALL BE EXOTHERMIC WELDS. SEE NAVSEA OP5 SPECIFICATION FOR USE OF MECHANICAL LUGS TO CONNECT TO OTHER GROUNDING SYSTEMS FOR USE OF TESTING PURPOSES. SEE DETAIL 2/E701.
4. ORDNANCE GROUND INSTALLED ALONG PIER SHALL BE A BARE CONDUCTOR AND SHALL NOT PAINTED. PROVIDE MINIMUM SLACK IN ORDNANCE GROUND TO CREATE A LOOP FOR CONNECTION TO GROUNDING STRAPS BY PIER OPERATIONS. INSTALL LOOPS ALONG CURB AT EACH ELECTRICAL IGLOO AND CENTERED IN BETWEEN EACH IGLOO ALONG PIER. SEE DETAIL 3/E701.

2 SITE PLAN
Scale: 1" = 10'

1"=10' 0' 10' 20' 30' 40' 50'

SYM	DESCRIPTION	DATE	APPR

NAVFAC

SEAL

A/E INFO

APPROVED

FOR COMMANDER NAVFAC / B.L.T.L.

ACTIVITY

CONTRACTOR TO DATE

DES CRD DRW CRD CHK RHF

PROJECT MANAGER H. KING

IPT TECH. BRANCH HEAD S. ZAVOYSKI

CHIEF ENG/ARCH (CORE) R. FLORES

DEPARTMENT OF THE NAVY
NAVAL FACILITIES ENGINEERING COMMAND
NAVAL FACILITIES ENGINEERING COMMAND SOUTHEAST
NAVAL AIR STATION JACKSONVILLE
IPT SOUTH ATLANTIC
AUTEC SITE 1
ANDROS ISLAND, BAHAMAS

PIER 1902 REPAIRS

SITE PLAN

SCALE: SCALE
EPROJECT NO.: 1302903
CONSTR. CONTR. NO. N69450-XX-C-XXXX
NAVFAC DRAWING NO. 15079080
SHEET 55 OF 56

ES102

DRAWFORM REVISION: 7 AUGUST 2009

FILE NAME: P:\CIBL\project_files\FLORIDA\nas key west fl\hjn00213\autec pier repairs-1302903\working technical files\Dwgs\Sheet Files\9 - ELECES102 SITE PLAN.dwg LAYOUT NAME: ES102 SITE PLAN PLOTTED: Monday, March 02, 2015 - 6:07pm USER: christopher.duguid

SHEET FORMAT IS 22" X 34". IF PRINTED SHEET IS NOT 22" X 34", THEN IT IS NOT TO SCALE

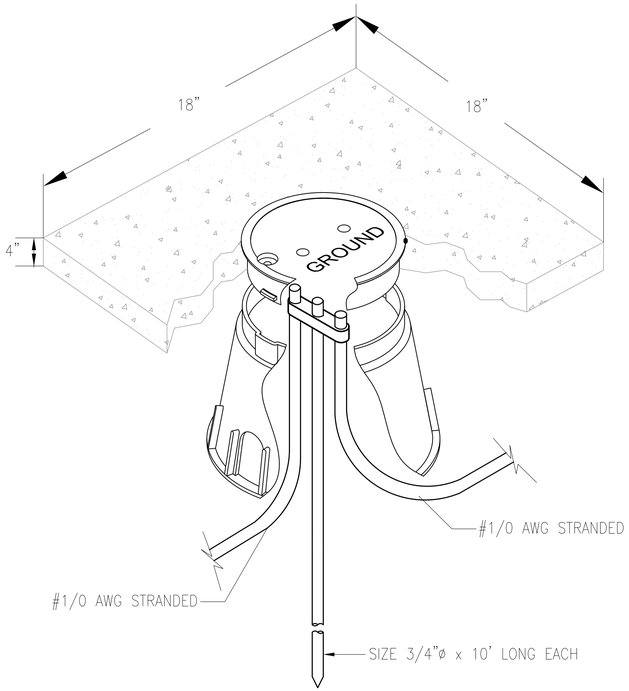

1 GROUND WELL DETAIL
Scale: NOT TO SCALE

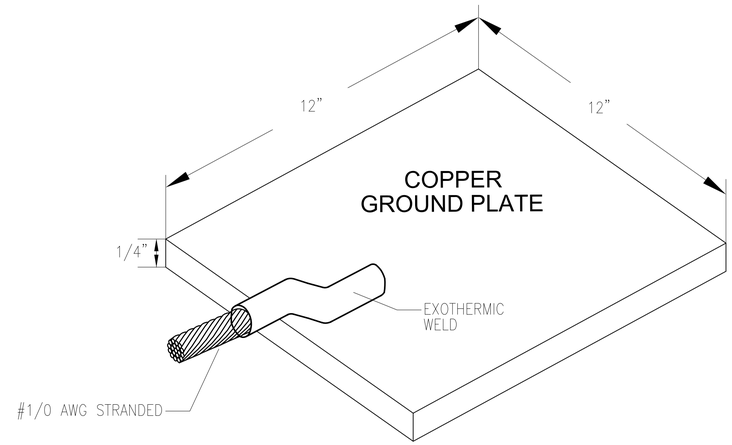

2 GROUND PLATE DETAIL
Scale: NOT TO SCALE

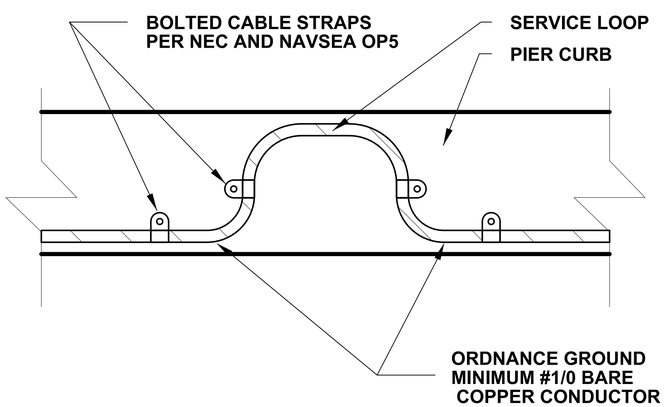

3 ORDNANCE GROUND LOOP DETAIL
Scale: NOT TO SCALE

GENERAL SHEET NOTES

GROUND WELL NOTES:

1. CONTRACTOR TO COORDINATE LOCATION AND INSTALLATION IN FIELD WITH CONTRACTING OFFICER. LOCATIONS TO BE ACCESSIBLE FOR FUTURE TESTING OF GROUNDING GIRDLE.
2. CONTRACTOR SHALL VERIFY INSTALLATION AND GROUND RESISTANCE PER NAVSEA OP5.

GROUND PLATE NOTES:

1. GROUND PLATE SHALL BE MINIMUM SIZE 12 INCH X 12 INCH X 1/4 INCH, AS SHOWN IN DETAIL. CONTRACTOR SHALL PROVIDE FINAL SIZES OF GROUNDING PLATES REQUIRED PER RESISTANCE REQUIREMENTS IN NAVSEA OP5.
2. GROUND PLATES SHALL BE EXOTHERMICALLY WELDED TO DOWN CONDUCTORS AND THE GROUNDING GIRDLE. MECHANICAL LUGS ARE ONLY ALLOWED ON ORDNANCE GROUND ALONG PIER FOR TESTING PURPOSES PER NAVSEA OP5.

ORDNANCE GROUNDING NOTES:

1. ORDNANCE GROUND SHALL BE BARE COPPER AND MINIMUM #1/0 CONDUCTOR.
2. ELECTRICAL CONTRACTOR TO INSTALL ORDNANCE CONDUCTOR ALONG BASE OF EXISTING PIER CURB USING STAINLESS STEEL STRAPS.
3. ELECTRICAL CONTRACTOR TO INSTALL SERVICE LOOPS IN FRONT OF EXISTING ELECTRICAL IGLOOS AND INSTALL SERVICE LOOPS CENTERED IN BETWEEN EACH ELECTRICAL IGLOO. ALL SERVICE LOOPS SHALL HAVE ADDITIONAL STRAPS TO AVOID GROUND CABLE BECOMING A TRIPPING HAZARD.
4. SERVICE LOOPS SHALL BE LARGE ENOUGH TO CONNECT GROUNDING STRAPS AND CLAMPS AS REQUIRED BY PIER OPERATIONS. COORDINATE INSTALLATION WITH PIER OPERATIONS AND CONTRACTING OFFICER FOR MINIMUM SERVICE LOOP SIZE AT EACH LOCATION ALONG PIER.
5. ELECTRICAL CONTRACTOR SHALL COORDINATE REMOVAL AND INSTALLATION OF ORDNANCE GROUNDING SYSTEM WITH CONTRACTING OFFICER DURING PHASES OF CONSTRUCTION ON PIER. ELECTRICAL CONTRACTOR AND CONTRACTING OFFICER TO VERIFY NO DAMAGE TO EXISTING ELECTRICAL SYSTEM DURING ALL PHASES OF CONSTRUCTION.

SYM	DESCRIPTION	DATE	APPR
---	---	---	---
---	---	---	---
---	---	---	---
---	---	---	---
---	---	---	---
---	---	---	---
---	---	---	---

NAVFAC

SEAL

A/E INFO

APPROVED

FOR COMMANDER NAVFAC / B.L.T.L.

ACTIVITY

SATISFACTORY TO

DES CRD DRW CRD CHK RHF

PROJECT MANAGER H. KING

IPT TECH. BRANCH HEAD S. ZAVOYSKI

CHIEF ENG/ARCH (CORE) R. FLORES

DEPARTMENT OF THE NAVY
NAVAL FACILITIES ENGINEERING COMMAND
IPT SOUTH ATLANTIC
NAVAL FACILITIES ENGINEERING COMMAND SOUTHEAST
NAVAL AIR STATION JACKSONVILLE
AUTEC SITE 1
ANDROS ISLAND, BAHAMAS
PIER 1902 REPAIRS
GROUNDING DETAILS

SCALE: SCALE

EPROJECT NO.: 1302903

CONSTR. CONTR. NO. N69450-XX-C-XXXX

NAVFAC DRAWING NO. 15079081

SHEET 56 OF 56

E701

DRAWFORM REVISION: 7 AUGUST 2009

SHEET FORMAT IS 22" X 34". IF PRINTED SHEET IS NOT 22" X 34", THEN IT IS NOT TO SCALE

FILE NAME: P:\CBL\project_files\FLORIDA\nas key west f(b)h00213\autec pier repairs-1302903\working technical files\Dwgs\Sheet Files\9 - ELECE701 GROUNDING DETAILS.dwg LAYOUT NAME: E701 GROUNDING DETAILS PLOTTED: Monday, March 02, 2015 - 5:46pm USER: christopher.duguid