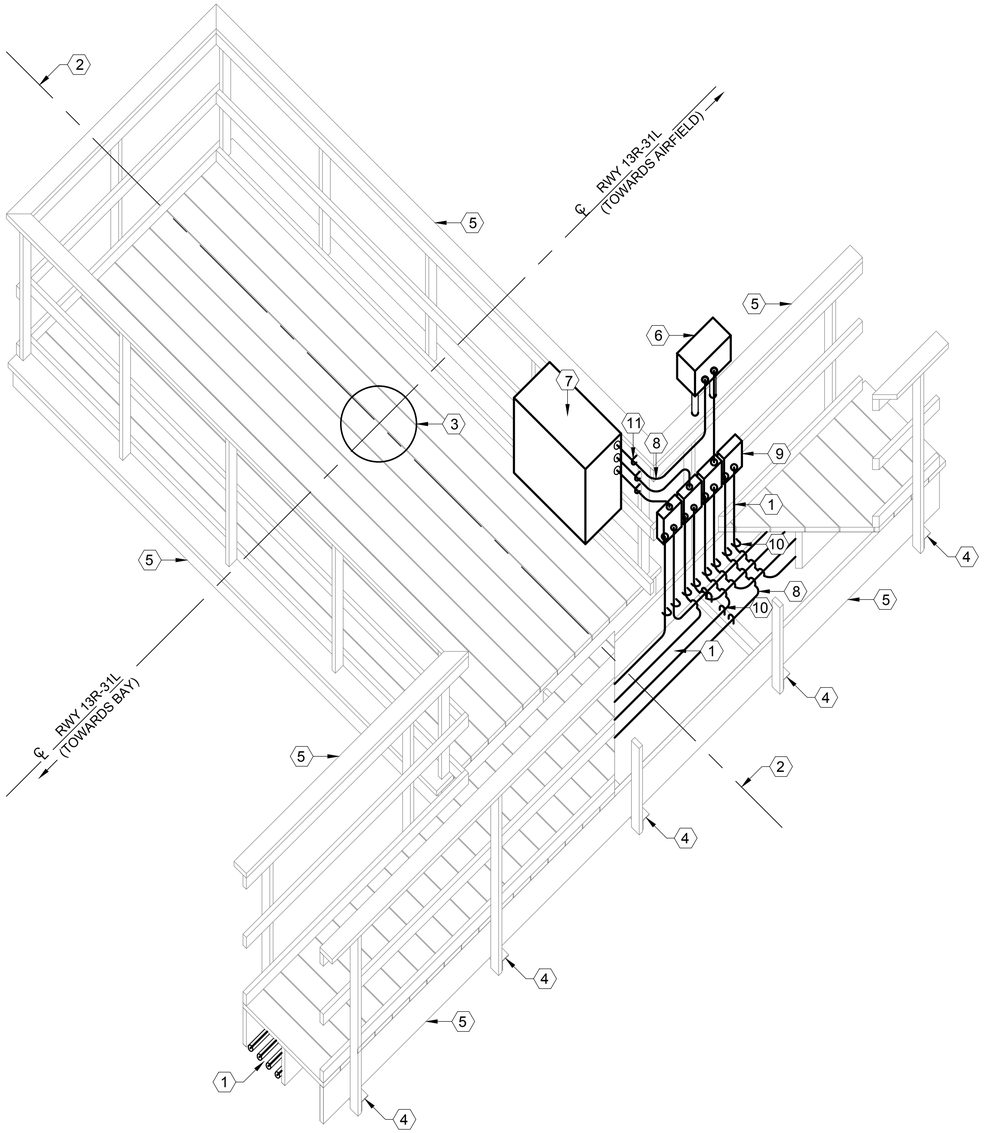

1 PIER INSTALLATION DETAIL

SCALE: 1/2" = 1'0"

1. (2) 1-1/2" & (2) 2" SCHEDULE 80 PVC CONDUITS. REFER TO EA-102 FOR ADDITIONAL INFORMATION.
2. CENTERLINE OF 100' STATION INCREMENT FROM END OF RUNWAY. LOCATION ON PIER SHOWN FOR EXAMPLE ONLY. ADJUST IN FIELD.
3. APPROXIMATE LOCATION OF MOUNTING FOR FRANGIBLE LIGHT MAST. REFER TO ADDITIONAL DETAILS FOR FURTHER INFORMATION ON FRANGIBLE MAST.
4. 3" x 3" x ¼" STAINLESS STEEL ANGLE. REFER TO STRUCTURAL DRAWINGS
5. WOODEN PIER & WALKWAY. REFER TO STRUCTURAL PLANS.
6. STROBE CONTROLLER HOUSING
7. STAINLESS STEEL LOCKING CABINET (WATERTIGHT) FOR HOUSING LIGHTING TRANSFORMERS. NUMBER TO BE DETERMINED IN FIELD.
8. INSTALL BENDS OR FLEXIBLE CONDUIT AS NECESSARY TO PROVIDE WATERTIGHT CONDUIT FROM BOX TO BOX.
9. WATERTIGHT PVC ELECTRICAL JUNCTION BOXES. (LOCKABLE OR SECURABLE)
10. SECURE 1-1/2" PVC CONDUIT TO STRUCTURAL MEMBER USING STAINLESS STEEL U-BOLTS.
11. WHERE STAINLESS STEEL U-BOLTS CANNOT BE INSTALLED SECURE CONDUIT WITH STAINLESS STEEL CONDUIT CLAMPS & FASTENERS.

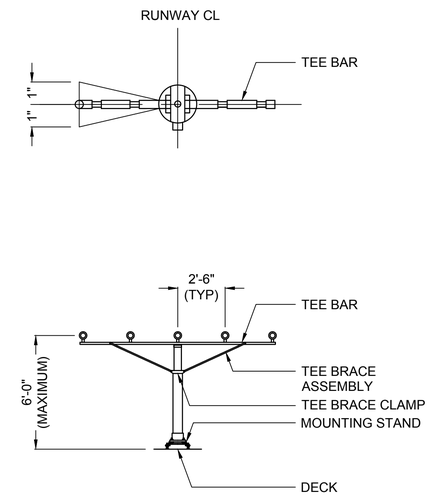

2 MG-20 LIGHT MAST DETAIL

SCALE: 1/4" = 1'0"

NOTE:

FOR WIRING ACCESS TO T-BAR CUT A SMALL HOLE IN THE RUBBER LINER (RL) OR TUBE CAP. DO NOT REMOVE RUBBER LINER.

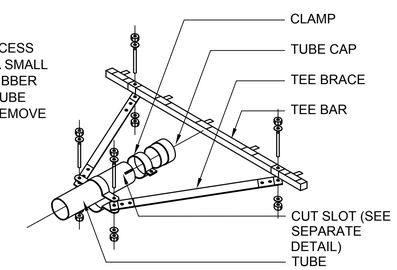

3 T-BAR ASSEMBLY DETAIL

SCALE: 1/4" = 1'0"

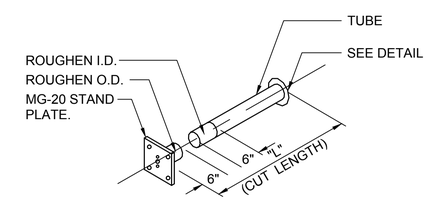

4 MG-20 MAST DETAIL

SCALE: 1/2" = 1'0"

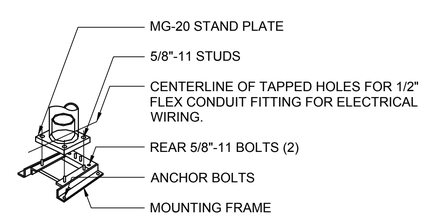

5 MG-20 MOUNTING STAND ASSEMBLY DETAIL

SCALE: 1/2" = 1'0"

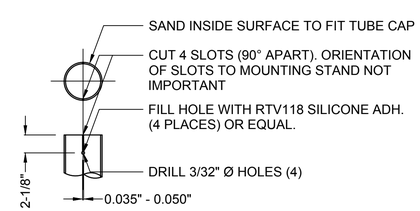

6 FIELD CUT SLOTS AND HOLES DETAIL

SCALE: 1" = 1'0"

ASSEMBLY INSTRUCTIONS:

1. FOR EACH LIR STRUCTURE DETERMINE REQUIRED TUBE LENGTH "L" AS SHOWN .
2. CUTTING & BONDING INSTRUCTIONS: CUT TUBE LENGTHS FROM ITEMS 2 & 3 AS REQUIRED USING A TABLE SAW WITH A DIAMOND OR CARBIDE ABRASIVE BLADE. ALL SAW CUTS SHALL BE AT RIGHT ANGLE TO TUBE AXIS. DEBURR SAW CUT EDGES WITH FILE. FOR BONDING, ROUGHEN SURFACES TO BE BONDED, AS SHOWN IN THE DETAILS USING EMERY CLOTH. CLEAN ROUGHENED SURFACES THOROUGHLY WITH A SOLVENT (TRICHLOROTHYLENE OR ACETONE). MIX EQUAL PART OF CHEMLOC 304-1 EPOXY RESIN AND 304-2 HARDENER, STIR THOROUGHLY BUT AVOID AIR INCLUSION. FOR EACH JOINT TO BE BONDED, SPREAD A LIGHT COAT OF MIXED ADHESIVE ON BOTH THE SURFACES TO BE BONDED.

   FOR MG-20: SLOWLY SLIDE TUBE ONTO STAND PLATE WHILE ROTATING IT TO EXCLUDE AIR. CURE 48 HOURS AT ROOM TEMPERATURE ABOVE 63° F.
3. ASSEMBLY INSTRUCTIONS: IMPORTANT - ALL LIR STRUCTURES ARE TO BE ASSEMBLED IN THE HORIZONTAL POSISTION (SEE DETAILS). ELECTRICAL WORK IS NOT SHOWN HERE

   MG-20: USE MOUNTING STAND ASSEMBLY SHOWN IN DETAILS. SET MTG STAND ON ANCHOR BOLTS AND SHIM TO LEVEL. FASTEN WITH (4) ¾" NUTS. REMOVE (2) ⅝" BOLTS AT REAR OF MOUNTING STAND ASSEMBLY & PIVOT INNER SECTION UP TO VERTICAL POSITION. PLACE STAND PLATE (BOTTOM OF MAST) OVER (4) ⅝" STUDS IN MOUNTING STAND AND FASTEN WITH HEX NUTS. NOTE POSITION OF TAPPED HOLES IN STAND PLATE. FOR ATTACHING TEE-ASSEMBLY REFER TO DETAILS.
4. RAISE EACH LIR STRUCTURE TO VERTICAL POSITION. LEVEL AND PLUMB EACH LIR STRUCTURE BASE AND MAST.

ASSEMBLY NOTES:

1. EACH LIR STRUCTURE SHALL BE CUT ACCORDINGLY, BONDED AND CURED PROPERLY IN A SUITABLE WORK ROOM.
2. BASE OF EACH LIR STRUCTURE SHALL BE ELECTRONICALLY GROUNDED IN THE FIELD
3. EACH LIR STRUCTURE SHALL BE MAINTAINED PER MANUFACTURER'S INSTRUCTIONS

SYM	DESCRIPTION	DATE	APPR
1	REVISED NOTE	13 NOV 2016	
0	ISSUED FOR BID	6 NOV 2015	

NAVFAC

REGISTERED PROFESSIONAL ENGINEER JOHN G. BEAN 19207 OKLAHOMA 13 JAN 16

SEAL

leidos
LEIDOS ENGINEERING, LLC
ONE WEST 3RD ST.
TULSA, OK 74103

DELTA AIRPORT CONSULTANTS, INC.
6711 Farrar Court, Suite 100
Richmond, Virginia 23236
phone: (804) 275-8301 • fax: (804) 275-8371
www.deltaairport.com

Delta Project No. 14072 A/E INFO

APPROVED

FOR COMMANDER NAVFAC

ACTIVITY

SATISFACTORY TO DATE

DES JBB | DRW JGP | CHK HWM

PM / DM

BRANCH MANAGER

CHIEF ENG / ARCH

FIRE PROTECTION

DEPARTMENT OF THE NAVY
NAVAL FACILITIES ENGINEERING COMMAND
CIBIL CORE
NAVAL FACILITIES ENGINEERING COMMAND SOUTHEAST
NAVAL AIR STATION JACKSONVILLE
NAS CORPUS CHRISTI
CORPUS CHRISTI, TEXAS
NAS CORPUS CHRISTI AIRFIELD REPAIRS
RUNWAY 13R APPROACH LIGHTS
APPROACH LIGHTS DETAILS

SCALE: AS NOTED

EPROJECT NO.:

CONSTR. CONTR. NO.

NAVFAC DRAWING NO. 15095291

SHEET 14 OF 33

C-503

DRAWFORM REVISION: 5 APRIL 2012

FILE NAME: P:\FDB\1641-OKC\AE\2051134800_nas_corpus_christi_airfield_repair\20_DESIGN\40_CAD\C\134800-04x-C-503.dwg LAYOUT NAME: Layout PLOTTED: Wednesday, January 13, 2016 - 9:08am USER: tiberm