STRUCTURAL ABBREVIATIONS

A.B.	ANCHOR BOLT(S)
ABV.	ABOVE
ACCEL.	ACCELERATION
ACI	AMERICAN CONCRETE INSTITUTE
ADDNL.	ADDITIONAL
ADJ.	ADJACENT
AESS	ARCHITECTURAL EXPOSED STRUCTURAL STEEL
A.F.F.	ABOVE FINISH FLOOR
AHU	AIR HANDLING UNIT
AISC	AMERICAN INSTITUTE OF STEEL CONSTRUCTION
AISI	AMERICAN IRON AND STEEL INSTITUTE
ALT.	ALTERNATE
ALUM.	ALUMINUM
ANC.	ANCHOR
ANSI	AMERICAN NATIONAL STANDARDS INSTITUTE
APPROX.	APPROXIMATE OR APPROXIMATELY
A.R.	ANCHOR ROD(S)
ARCH.	ARCHITECTURAL
ASCE	AMERICAN SOCIETY OF CIVIL ENGINEERS
ASD	ALLOWABLE STRENGTH DESIGN OR ALLOWABLE STRESS DESIGN
ASTM	AMERICAN SOCIETY FOR TESTING MATERIALS
AVG.	AVERAGE
AWS	AMERICAN WELDING SOCIETY
B	BOTTOM
BAL.	BALANCE
BD	BOARD
BEJ	BRICK OR BLOCK EXPANSION JOINT
BEL.	BELOW
BETW.	BETWEEN
B.E.W.	BOTTOM EACH WAY
B.F.	BOTTOM FACE
B.F.F.	BELOW FINISHED FLOOR
BF	BRACED FRAME
B.L.	BOTTOM LAYER
BL.	BRICK LEDGE OR BLOCK LEDGE
BLDG.	BUILDING
BLK.	BLOCK OR BLOCKING
BM.(S)	BEAM(S)
B.O.	BOTTOM OF
B.O.F.	BOTTOM OF FOOTING
B.O.P.	BOTTOM OF PIER OR PEDESTAL
B.O.S.	BOTTOM OF STEEL
BOT.	BOTTOM
BP	BASE PLATE
BPL	BEARING PLATE
BRCG.	BRACING
BRDG.	BRIDGING
BRG.	BEARING
BRK.	BRICK
B.S.	BOTH SIDES
BT.	BENT
BTM.	BOTTOM
B. TO B.	BACK TO BACK
C	COMPRESSION
C#	COLUMN NUMBER
C.C.	CENTER TO CENTER
CANT.	CANTILEVER
CAT.	CATEGORY
CF	CONTRACTOR FURNISHED
CFMF	COLD-FORMED METAL FRAMING CONTRACTOR INSTALLED
CIP	CAST-IN-PLACE
C.J.	CONSTRUCTION JOINT OR CONTROL JOINT
CL.	CENTERLINE
CLR.	CLEAR
CMU	CONCRETE MASONRY UNIT
COEFF.	COEFFICIENT
COL.	COLUMN
COMP.	COMPOSITE
CONC.	CONCRETE
CONN.	CONNECTION
CONSTR.	CONSTRUCTION
CONT.	CONTINUOUS
COORD.	COORDINATE
CTR.	CENTER
CU.	CUBIC
CWB	CAPILLARY WATER BARRIER
D	DEPTH
D.B.	DECK BEARING
D.B.A.	DEFORMED BAR ANCHOR
DBL.	DOUBLE
DEFL.	DEFLECTION
DEG.	DEGREE
DEM.	DEMOLISH
DET.	DETAIL
DIA.	DIAMETER
DIAG.	DIAGONAL
DIM.	DIMENSIONS
DK.	DECK
D.L.	DEAD LOAD
DN	DOWN
DO	DITTO
DoD	DEPARTMENT OF DEFENSE
DP	DEEP OR DRILLED PIER
DRN.	DRAIN
D.S.J.	DOWELED SAW JOINT
D.T.I.	DIRECT TENSION INDICATOR
DWG.(S)	DRAWING(S)
DWL.(S)	DOWEL(S)
E	EAST
EA.	EACH
ECC	ECCENTRICITY
ED.	EDITION
E.E.	EACH END
E.F.	EACH FACE
EIFS	EXTERIOR INSULATED FINISH SYSTEM
E.J.	EXPANSION JOINT
EL.	ELEVATION
ELEC.	ELECTRICAL
ELEV.	ELEVATION
EMBED.	EMBEDDED, EMBEDMENT
ENGR.	ENGINEER
ENT.	ENTRAINMENT
EOS	EDGE OF SLAB
EQ.	EQUAL
EQUIP.	EQUIPMENT
EQUIV.	EQUIVALENT
E.W.	EACH WAY
EXCAV.	EXCAVATE OR EXCAVATION
EXIST.	EXISTING
EXP.	EXPANSION
EXT.	EXTERIOR
F#	FOOTING NUMBER
Fb	ALLOWABLE BENDING STRESS
Fc	ALLOWABLE COMPRESSIVE STRESS
FD	FLOOR DRAIN
FDN.	FOUNDATION
FIG.	FIGURE
F TO F	FACE TO FACE
F.F.	FINISHED FLOOR OR FAR FACE
FIN.	FINISH(ED)
FLEX.	FLEXIBLE
FLR.	FLOOR
FP	FIREPROOF OR FIREPROOFING
F.S.	FAR SIDE
FT.	FEET OR FOOT
FTG.	FOOTING
Fu	SPECIFIED MINIMUM TENSILE STRENGTH
FY	SPECIFIED MINIMUM YIELD STRENGTH
F'c	SPECIFIED COMPRESSIVE STRENGTH OF CONCRETE
F'cr	REQUIRED COMPRESSIVE STRENGTH OF CONCRETE
F'm	COMPRESSIVE STRENGTH OF MASONRY
GA.	GAGE
GALV.	GALVANIZED
GB	GRADE BEAM
GB#	GRADE BEAM NUMBER
GC	GENERAL CONTRACTOR
GEN.	GENERAL
GEO	GEOTECHNICAL
GF	GOVERNMENT FURNISHED
GI	GOVERNMENT INSTALLED
GOVT	GOVERNMENT
GR.	GRADE
GRTG.	GRATING
H	HIGH
HD. ST.	HEADED STUD
HK.	HOOK
HORIZ.	HORIZONTAL
HP	HIGH POINT
H.S.	HIGH STRENGTH
HT.	HEIGHT
I	MOMENT OF INERTIA
In	MOMENT OF INERTIA (NEGATIVE)
Ip	MOMENT OF INERTIA (POSITIVE)
Ix	MOMENT OF INERTIA ABOUT X-AXIS
IBC	INTERNATIONAL BUILDING CODE
I.D.	INSIDE DIAMETER
I.F.	INSIDE FACE
IN.	INCH(ES)
INCL.	INCLUDE(D)(ING)
INFO.	INFORMATION
INT.	INTERIOR OR INTERMEDIATE
J.B.	JOIST BEARING
JST.	JOIST
JT.	JOINT
K	KIP(S)
KCF	KIPS PER CUBIC FOOT
Kg	KILOGRAM
KLF	KIPS PER LINEAL FOOT
kN	KILONEWTON
kPa	KILOPASCAL
KSF	KIPS PER SQUARE FOOT
KSI	KIPS PER SQUARE INCH
L	LENGTH, LONG
LB.(S)	POUND(S)
LIN.	LINEAR
L.L.	LIVE LOAD
LLBB	LONG LEG BACK-TO-BACK
LLH	LONG LEG HORIZONTAL
LLV	LONG LEG VERTICAL
LONG.	LONGITUDINAL
LP	LOW POINT
LRFD	LOAD AND RESISTANCE FACTOR DESIGN
LSH	LONG SIDE HORIZONTAL
LSV	LONG SIDE VERTICAL
LT.	LIGHT
L.W.	LIGHT-WEIGHT
LWC	LIGHT-WEIGHT CONCRETE
M	METER(S)
MANUF.	MANUFACTURER(S)
MATL.	MATERIAL
MAX.	MAXIMUM
MBM	METAL BUILDING SYSTEM MANUFACTURER
MBR.	MEMBER
MBS	METAL BUILDING SYSTEM
M.C.	MOMENT CONNECTION
MCJ	MASONRY CONTROL JOINT
MECH.	MECHANICAL
MEP	MECHANICAL, ELECTRICAL, PLUMBING, FIRE PROTECTION
MEZZ.	MEZZANINE
MID.	MIDDLE
MIN.	MINIMUM
MISC.	MISCELLANEOUS
MK	MARK
ML	MASONRY LEDGE
mm	MILLIMETER(S)
M.O.	MASONRY OPENING
MPH	MILES PER HOUR
MTL	METAL
MPa	MEGAPASCAL
N	NORTH OR NEWTON
N.A.	NOT APPLICABLE
NDT	NON-DESTRUCTIVE TESTING
N.F.	NEAR FACE
N.I.C.	NOT IN CONTRACT
NO.	NUMBER
NOM.	NOMINAL
N.R.	NOT REQUIRED
N.S.	NEAR SIDE
N.T.S.	NOT TO SCALE
N.W.	NORMAL WEIGHT
NWC	NORMAL WEIGHT CONCRETE
O.C.	ON CENTER
O.D.	OUTSIDE DIAMETER
O.F.	OUTSIDE FACE
O.H.	OPPOSITE HAND OR OVERHEAD
OPER.	OPERATING
OPNG.	OPENING
OPP	OPPOSITE
OZ	OUNCE
PARA.	PARAGRAPH
PC	PILE CAP OR PIER CAP
P.C.	PRECAST CONCRETE
PCI	PRECAST/PRESTRESSED CONCRETE INSTITUTE
PCF	POUNDS PER CUBIC FOOT
PCY	POUNDS PER CUBIC YARD
PED.	PEDESTAL
PERF.	PERFORATED
PERP.	PERPENDICULAR
PL.	PLATE
PLF	POUNDS PER LINEAL FOOT
PLUMB.	PLUMBING
PLYWD.	PLYWOOD
PREFAB.	PREFABRICATED
PROJ.	PROJECT
PSF	POUNDS PER SQUARE FOOT
PSI	POUNDS PER SQUARE INCH
PT.	POINT
PVC	POLYVINYL CHLORIDE
P/T	POST-TENSIONED
QTY.	QUANTITY
R	RISER(S)
RAD.	RADIUS
RAF	RAISED ACCESS FLOOR (ING)
RCSC	RESEARCH COUNCIL ON STRUCTURAL CONNECTIONS
R.D.	ROOF DRAIN
REF.	REFER TO, REFERENCE
REINF.	REINFORCING OR REINFORCEMENT
REQ'D.	REQUIRED
REQ'MT(S)	REQUIREMENT(S)
REV.	REVISION
RND.	ROUND
RTU	ROOF TOP UNIT
S	SOUTH OR SECTION MODULUS
S.C.	SHEAR CONNECTOR
SCHED.	SCHEDULE
SDI	STEEL DECK INSTITUTE
SDL	SUPERIMPOSED DEAD LOAD
SECT.	SECTION
SER	STRUCTURAL ENGINEER OF RECORD
SF	SQUARE FOOT (FEET)
SHT.	SHEET
SIM.	SIMILAR
S.J.	SAWED JOINT
SJI	STEEL JOIST INSTITUTE
SLBB	SHORT LEG BACK-TO-BACK
SLH	SHORT LEG HORIZONTAL
SLV	SHORT LEG VERTICAL
Sn	SECTION MODULUS (NEGATIVE)
S.O.G.	SLAB ON GRADE
Sp	SECTION MODULUS (POSITIVE)
SP.	SPACE(S), SPACING
SPEC.	SPECIFICATION(S)
SQ.	SQUARE
SS	STAINLESS STEEL
STD.	STANDARD
STGR.	STRINGER
STIFF.	STIFFENER
STL.	STEEL
STRUCT.	STRUCTURAL
SUBSTR.	SUBSTRUCTURE
SUSP.	SUSPEND (ED)
Sx	SECTION MODULUS ABOUT X-AXIS
SYM.	SYMMETRICAL
SYS.	SYSTEM
T.L.	TOP LAYER
T.O.	TOP OF
T.O.C.	TOP OF CONCRETE
T.O.F.	TOP OF FOOTING
T.O.G.B.	TOP OF GRADE BEAM
T.O.M.	TOP OF MASONRY
T.O.P.	TOP OF PIER, PEDESTAL, OR PARAPET
T.O.S.	TOP OF STEEL
T.O.W.	TOP OF WALL
TRANS.	TRANSVERSE
TYP.	TYPICAL
T&B	TOP & BOTTOM
UFC	UNIFIED FACILITIES CRITERIA (DoD)
U.N.O.	UNLESS NOTED OTHERWISE
USACE	UNITED STATES ARMY CORPS OF ENGINEERS
U.O.N.	UNLESS OTHERWISE NOTED
VAR.	VARIES OR VARIABLE
VERT.	VERTICAL
V.I.F.	VERIFY IN FIELD
VOL.	VOLUME
V.R.	VAPOR RETARDER SYSTEM
VS	VERSUS
VSC	VERTICAL SLIP CLIP
VST	VERTICAL SLIP TRACK
W.C.	WEB CONNECTION
WD.	WOOD
WF	WIDE FLANGE
WP	WORKING POINT
W.P.J.	WEAKENED PLANE JOINT
W.S.	WATERSTOP
WSFC.	WEB SHEAR FRAMING CONNECTION
WT.	WEIGHT
WWF	WELDED WIRE FABRIC
W/	WITH
W/C	WATER/CEMENT
W/O	WITHOUT
X	BY
YD.	YARD
&	AND
@	AT
Ø	DIAMETER
#	NUMBER
%	PERCENT
±	PLUS OR MINUS

STATEMENT OF SPECIAL INSPECTIONS

STATEMENT OF SPECIAL INSPECTIONS -

1. THE "STATEMENT OF SPECIAL INSPECTIONS" HAS BEEN PREPARED IN ACCORDANCE WITH THE SPECIAL INSPECTION AND STRUCTURAL TESTING REQUIREMENTS OF THE IBC 2012, SECTION 1705.

2. THIS "STATEMENT OF SPECIAL INSPECTIONS" ENCOMPASSES THE FOLLOWING DISCIPLINE: STRUCTURAL

3. IN ACCORDANCE WITH UFC 1-200-01 SECTION 2-17, THE CONTRACTOR SHALL RETAIN APPROVED THIRD-PARTY QUALITY ASSURANCE AGENCIES TO CONDUCT THE SPECIAL INSPECTIONS REQUIRED BY THE IBC 2012 FOR THE TYPE OF WORK INDICATED.

4. THE SPECIAL INSPECTOR SHALL BE A QUALIFIED PERSON(S) WHO SHALL DEMONSTRATE COMPETENCE TO THE SATISFACTION OF THE CONTRACTING OFFICER FOR INSPECTION OF THE PARTICULAR TYPE OF CONSTRUCTION OR OPERATION REQUIRING SPECIAL INSPECTION.

5. SPECIAL INSPECTIONS PERFORMED SHALL BE IN COORDINATION WITH IBC 2012, SECTIONS 1704 AND 1705.

6. THE SPECIAL INSPECTOR SHALL SUBMIT SPECIAL INSPECTION REPORTS TO THE CONTRACTING OFFICER AND TO THE REGISTERED DESIGN PROFESSIONAL IN RESPONSIBLE CHARGE (STRUCTURAL ENGINEER OF RECORD) DURING CONSTRUCTION FOR VERIFICATION, INCLUDING FINAL REPORTS IN ACCORDANCE WITH IBC 2012, SECTION 1704.2.4.

7. SPECIAL INSPECTIONS FOR WIND RESISTANCE SHALL BE IN ACCORDANCE WITH IBC 2012, SECTION 1705.10.

8. THE SPECIAL INSPECTOR SHALL USE THE LATEST ISSUE OF THE STRUCTURAL DRAWINGS AND SPECIFICATIONS FOR THE INSPECTION OF THIS STRUCTURE. SHOP FABRICATION DRAWINGS SHALL NOT BE USED FOR INSPECTION PURPOSES.

9. THESE INSPECTIONS ARE IN ADDITION TO THE INSPECTIONS SPECIFIED IN SECTION 109 OF THE IBC 2012.

10. IN ACCORDANCE WITH IBC 2012, SECTION 1704.4, EACH CONTRACTOR RESPONSIBLE FOR THE CONSTRUCTION OF A MAIN WIND FORCE RESISTING SYSTEM (MWFRS) OR A WIND-RESISTING COMPONENT LISTED IN THE STATEMENT OF SPECIAL INSPECTION SHALL SUBMIT A WRITTEN STATEMENT OF RESPONSIBILITY TO THE CONTRACTING OFFICER PRIOR TO THE COMMENCEMENT OF WORK ON THE SYSTEM OR COMPONENT. THE CONTRACTOR'S STATEMENT OF RESPONSIBILITY SHALL SHALL CONTAIN ACKNOWLEDGEMENT OF AWARENESS OF THE SPECIAL REQUIREMENTS CONTAINED IN THE STATEMENT OF SPECIAL INSPECTION.

11. SPECIAL INSPECTION FOR WOOD CONSTRUCTION SHALL BE IN ACCORDANCE WITH IBC 2012, SECTION 1705.5.

12. SPECIAL INSPECTIONS FOR STRUCTURAL WOOD SHALL BE IN ACCORDANCE WITH IBC 2012, SECTION 1705.10.1.

SYM	DESCRIPTION	DATE	APPR.
0	ISSUED FOR BID	6 NOV 2015	

NAVFAC

LICENSED PROFESSIONAL ENGINEER DAVID P. SWYDEN 25815 OKLAHOMA — SEAL

leidos
LEIDOS ENGINEERING, LLC
ONE WEST 3RD ST.
TULSA, OK 74103

DELTA AIRPORT CONSULTANTS, INC.
9711 Farrar Court, Suite 100
Richmond, Virginia 23236
phone: (804) 275-6301 • fax: (804) 275-6371
www.deltaairport.com
Delta Project No. 14072 A/E INFO

APPROVED
FOR COMMANDER NAVFAC
ACTIVITY
SATISFACTORY TO DATE
DES DPS DRW JGF CHK STW
PM / DM
BRANCH MANAGER
CHIEF ENG / ARCH
FIRE PROTECTION

DEPARTMENT OF THE NAVY
NAVAL FACILITIES ENGINEERING COMMAND
CIBL CORE
NAVAL FACILITIES ENGINEERING COMMAND SOUTHEAST
NAVAL AIR STATION JACKSONVILLE
NAS CORPUS CHRISTI
CORPUS CHRISTI, TEXAS
NAS CORPUS CHRISTI AIRFIELD REPAIRS
RUNWAY 13R APPROACH LIGHTS
STRUCTURAL ABBREVIATIONS & SPECIAL INSPECTIONS

SCALE: NTS
EPROJECT NO.:
CONSTR. CONTR. NO.
NAVFAC DRAWING NO. 15095293
SHEET 16 OF 33
S-002
DRAWFORM REVISION: 5 APRIL 2012

FILE NAME: P:\FDB\1641-OKC\VE\205113480_NAS_Corpus_Christi_Airfield_Repair\20_DESIGN\40_CAD\S\134800-04x-S-002.dwg LAYOUT NAME: 134800-04x-S-002 PLOTTED: Wednesday, November 04, 2015 - 8:44am USER: fountlorj

SHEET FORMAT IS 22" X 34". IF PRINTED SHEET IS NOT 22" X 34", THEN IT IS NOT TO SCALE

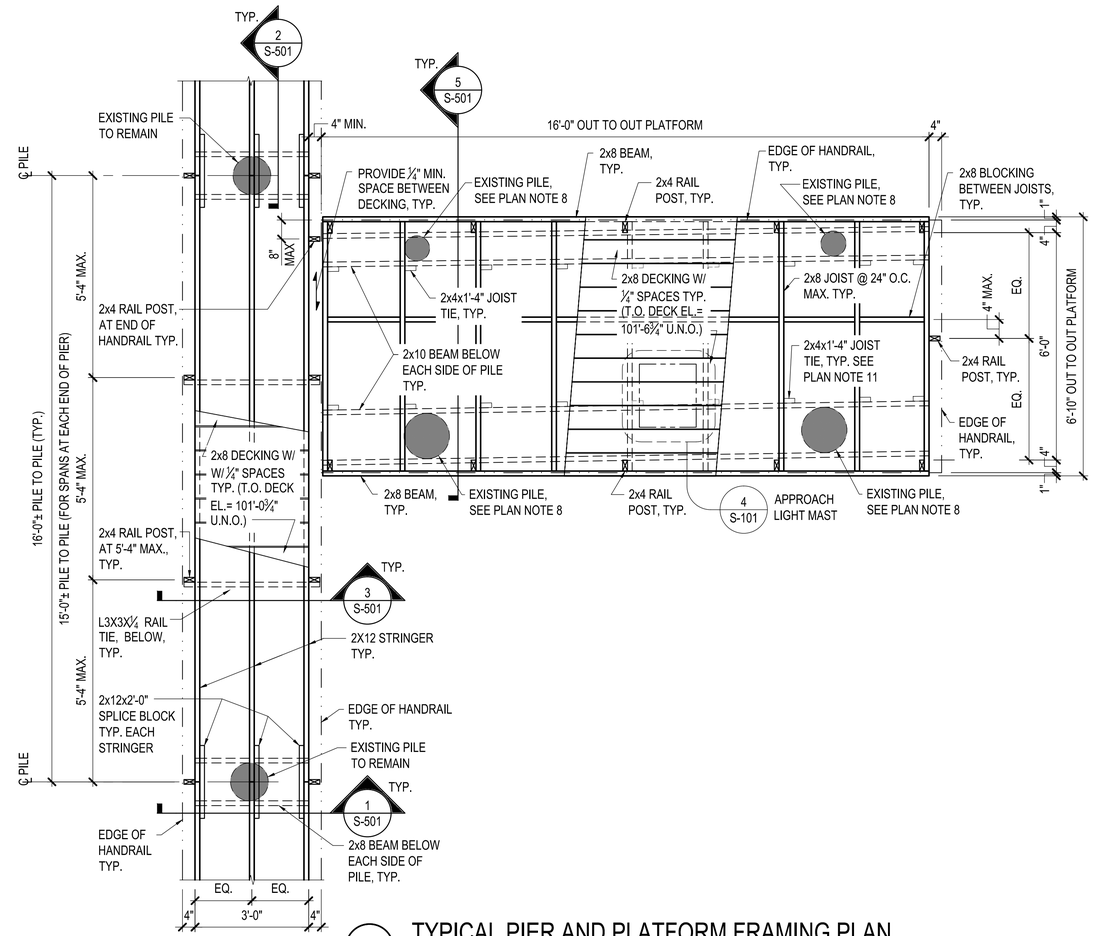

1 TYPICAL PIER AND PLATFORM FRAMING PLAN
1/2"=1'-0"

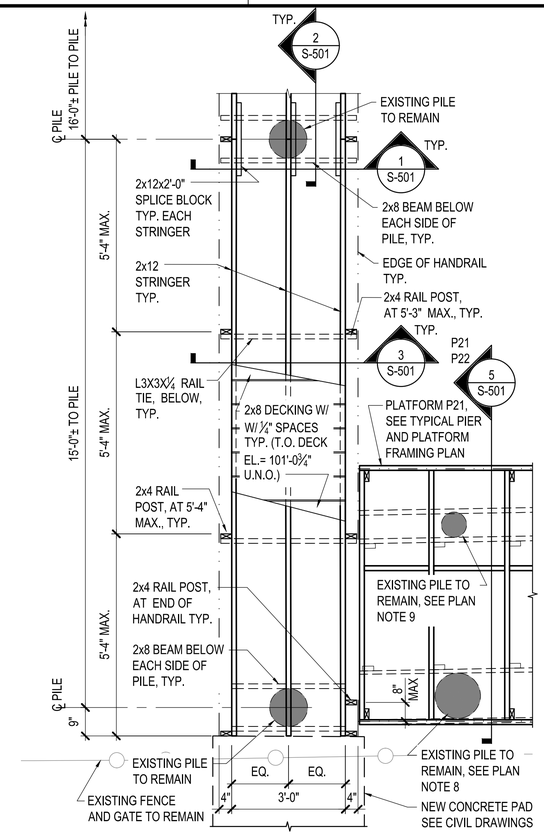

2 PIER FRAMING PLAN - SHORE END
1/2"=1'-0"

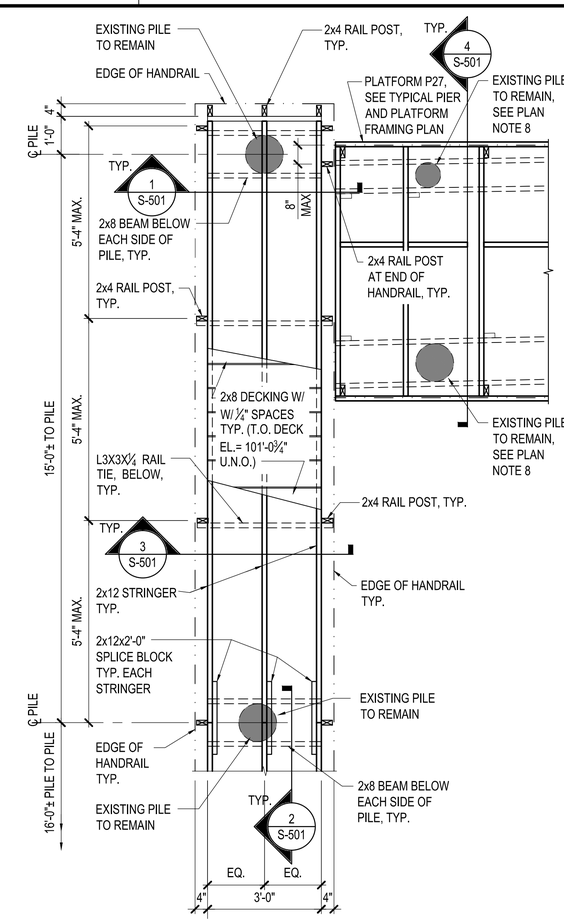

3 PIER FRAMING PLAN - END OF PIER
1/2"=1'-0"

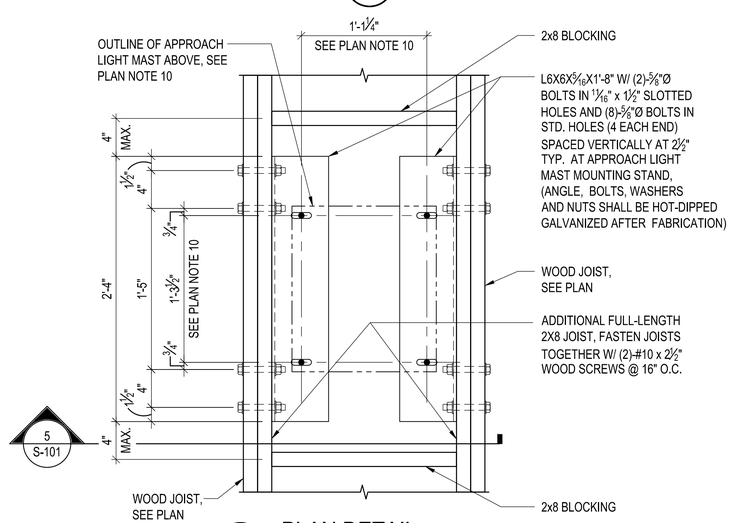

4 PLAN DETAIL
1 1/2"=1'-0"

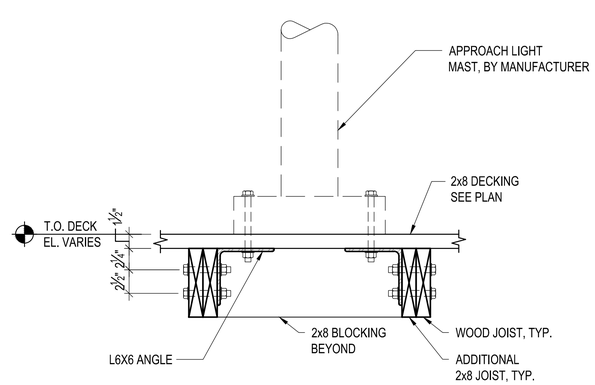

5 SECTION
1 1/2"=1'-0"

PLAN NOTES:

1. SEE SHEET CS101 FOR LOCATION AND EXTENTS OF APPROACH LIGHTING PIER AND PLATFORMS.
2. SEE GENERAL STRUCTURAL NOTES FOR ADDITIONAL INFORMATION AND REQUIREMENTS.
3. FIELD VERIFY ALL DIMENSIONS AND EXISTING CONDITION PRIOR TO FABRICATION OR CONSTRUCTION.
4. ELEVATION 100'-0"± = ACTUAL ELEVATION 2.04'± ABOVE MEAN SEA LEVEL. (FIELD VERIFY AND MATCH THE ELEVATION OF THE EXISTING PILE)
5. TOP OF PILE ELEVATION AT EXISTING PIER = 100'-0" U.N.O.
6. EXISTING TIMBER PILES SHALL REMAIN U.N.O.
7. EXISTING TIMBER PILES SUPPORTING NEW PIER ARE SPACED AT 16'-0"± O.C. TYPICAL, END SPANS ARE 15'-0"±. (FIELD VERIFY)
8. TOP OF EXISTING PILES SHALL BE CUT TO ELEVATION 101'-2 1/2" AT LOCATIONS SHOWN. TREAT TOP OF PILE AND INSTALL PILING CAP IN ACCORDANCE WITH GENERAL STRUCTURAL NOTES B.11 AND B.12. SEE DETAILS 4/S-501 AND 5/S-501 FOR ADDITIONAL INFORMATION.
9. TOP OF EXISTING PILES BELOW ELEVATION 100'-6 3/4" SHALL BE USED AT EXISTING ELEVATION. SEE DETAIL 5/S-501 FOR ADDITIONAL INFORMATION.
10. CONTRACTOR SHALL FIELD VERIFY DIMENSIONS WITH SELECTED APPROACH LIGHT MAST MOUNTING STAND. (BASIS OF THIS DESIGN IS TYPE MG-20 L.I.R. FRANGIBLE APPROACH MAST WITH GALVANIZED STEEL MOUNTING STAND BY JAQUITH INDUSTRIES, INC.).
11. JOIST TIES SHALL BE FASTENED TO SUPPORTING MEMBERS WITH A MINIMUM OF (8)-#10 WOOD SCREWS, TYPICAL.
12. PROVIDE 2x12 BLOCKING BETWEEN PIER STRINGERS AT EACH HANDRAIL POST LOCATION. OFFSET BLOCKING 4" TO ONE SIDE OF POST, TYPICAL.
13. ALL CONNECTION HARDWARE SHALL BE STAINLESS STEEL (TYPE 316) IN ACCORDANCE WITH ASTM F593 U.N.O.

0 1' 2' 4'
1/2" = 1'-0"

0 6" 1' 1'-6"
1-1/2" = 1'-0"

SYM	DESCRIPTION	DATE	APPR.
0	ISSUED FOR BID	6 NOV 2015	

NAVFAC

LICENSED PROFESSIONAL ENGINEER DAVID L. SWYDEN 25815 OKLAHOMA
SEAL

leidos
LEIDOS ENGINEERING, LLC
ONE WEST 3RD ST.
TULSA, OK 74103

DELTA AIRPORT CONSULTANTS, INC.
9711 Farrar Court, Suite 100
Richmond, Virginia 23236
phone: (804) 275-6301 • fax: (804) 275-6371
www.deltaairport.com
Delta Project No. 14072 A/E INFO

APPROVED
FOR COMMANDER NAVFAC
ACTIVITY
SATISFACTORY TO DATE
DES DPS DRW JGF CHK STW
PM / DM
BRANCH MANAGER
CHIEF ENG / ARCH
FIRE PROTECTION

DEPARTMENT OF THE NAVY
NAVAL FACILITIES ENGINEERING COMMAND
CIBIL CORE
NAVAL FACILITIES ENGINEERING COMMAND SOUTHEAST
NAVAL AIR STATION JACKSONVILLE
NAS CORPUS CHRISTI
CORPUS CHRISTI, TEXAS
NAS CORPUS CHRISTI AIRFIELD REPAIRS
RUNWAY 13R APPROACH LIGHTS
TYPICAL PIER AND PLATFORM FRAMING PLANS

SCALE: AS NOTED
EPROJECT NO.:
CONSTR. CONTR. NO.
NAVFAC DRAWING NO. 15095294
SHEET 17 OF 33
S-101
DRAWFORM REVISION: 5 APRIL 2012

FILE NAME: P:\FDB\1641-OKC\AE\205113480G_NAS_Corpus_Christi_Airfield_Repair\20_DESIGN\40_CAD\S\134800-04x-S-101.dwg LAYOUT NAME: 134800-04x-S-101 PLOTTED: Wednesday, November 04, 2015 - 8:44am USER: fountolnj

SHEET FORMAT IS 22" X 34". IF PRINTED SHEET IS NOT 22" X 34", THEN IT IS NOT TO SCALE

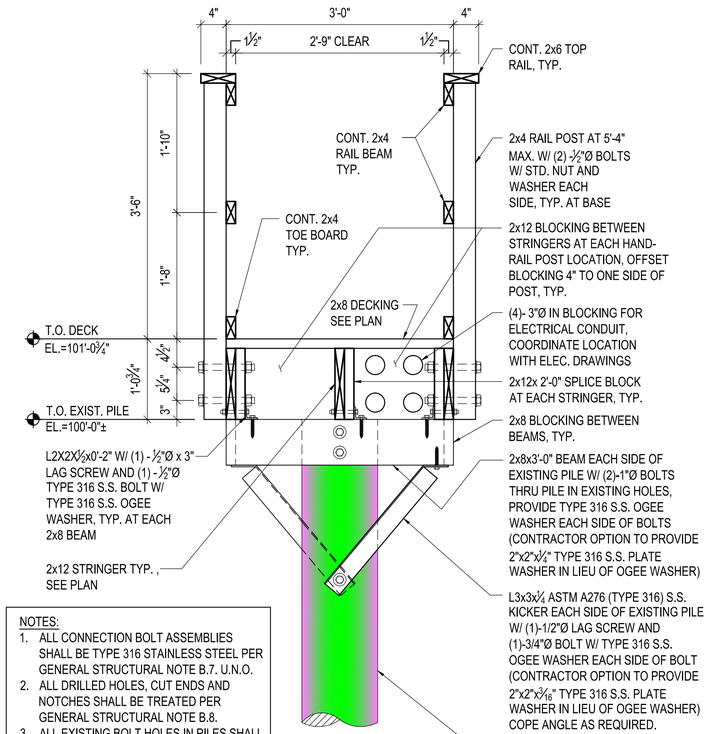

NOTES:
1. ALL CONNECTION BOLT ASSEMBLIES SHALL BE TYPE 316 STAINLESS STEEL PER GENERAL STRUCTURAL NOTE B.7. U.N.O.
2. ALL DRILLED HOLES, CUT ENDS AND NOTCHES SHALL BE TREATED PER GENERAL STRUCTURAL NOTE B.8.
3. ALL EXISTING BOLT HOLES IN PILES SHALL BE OVERDRILLED AND TREATED PER GENERAL STRUCTURAL NOTE B.10.

1 SECTION AT PIER
1"=1'-0"

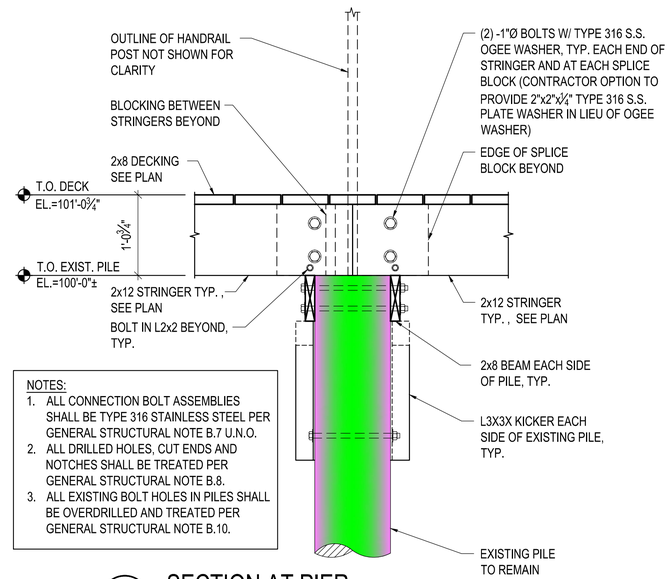

NOTES:
1. ALL CONNECTION BOLT ASSEMBLIES SHALL BE TYPE 316 STAINLESS STEEL PER GENERAL STRUCTURAL NOTE B.7 U.N.O.
2. ALL DRILLED HOLES, CUT ENDS AND NOTCHES SHALL BE TREATED PER GENERAL STRUCTURAL NOTE B.8.
3. ALL EXISTING BOLT HOLES IN PILES SHALL BE OVERDRILLED AND TREATED PER GENERAL STRUCTURAL NOTE B.10.

2 SECTION AT PIER
1"=1'-0"

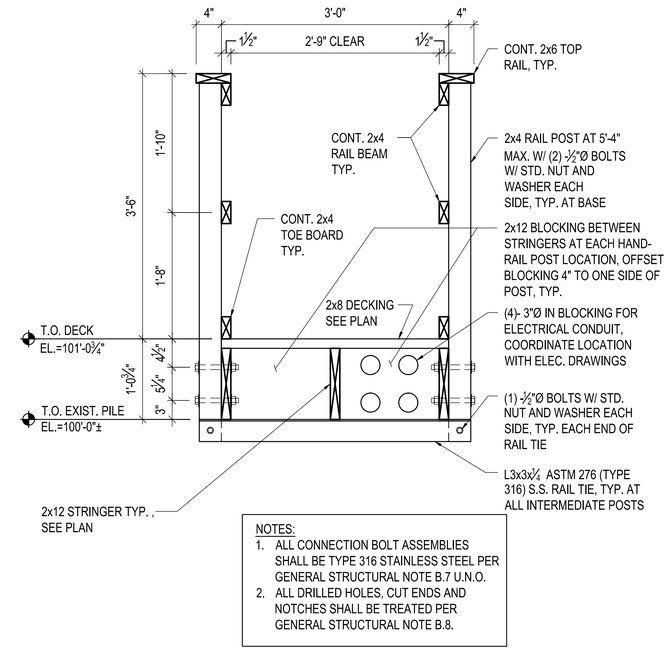

NOTES:
1. ALL CONNECTION BOLT ASSEMBLIES SHALL BE TYPE 316 STAINLESS STEEL PER GENERAL STRUCTURAL NOTE B.7 U.N.O.
2. ALL DRILLED HOLES, CUT ENDS AND NOTCHES SHALL BE TREATED PER GENERAL STRUCTURAL NOTE B.8.

3 SECTION AT PIER
1"=1'-0"

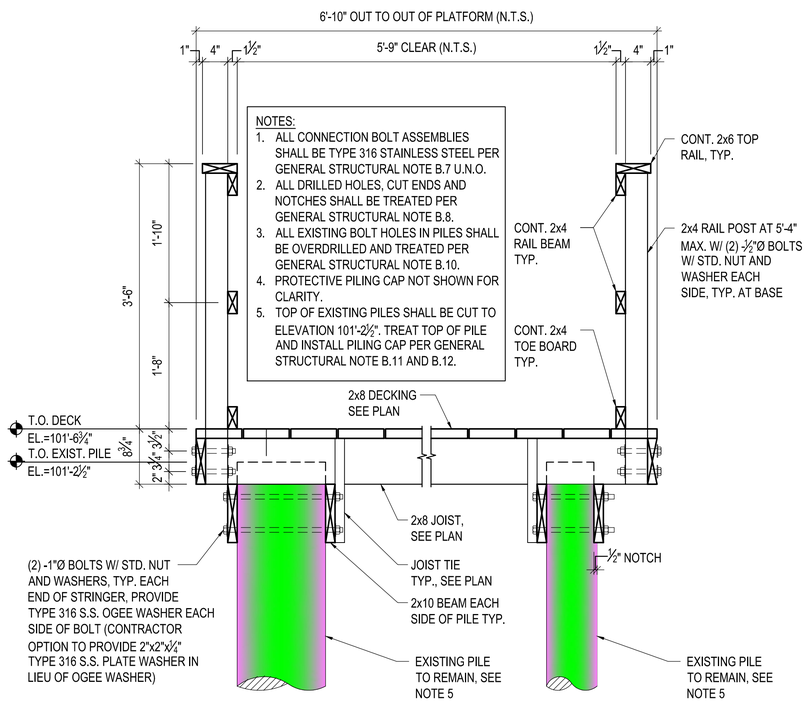

NOTES:
1. ALL CONNECTION BOLT ASSEMBLIES SHALL BE TYPE 316 STAINLESS STEEL PER GENERAL STRUCTURAL NOTE B.7 U.N.O.
2. ALL DRILLED HOLES, CUT ENDS AND NOTCHES SHALL BE TREATED PER GENERAL STRUCTURAL NOTE B.8.
3. ALL EXISTING BOLT HOLES IN PILES SHALL BE OVERDRILLED AND TREATED PER GENERAL STRUCTURAL NOTE B.10.
4. PROTECTIVE PILING CAP NOT SHOWN FOR CLARITY.
5. TOP OF EXISTING PILES SHALL BE CUT TO ELEVATION 101'-2½". TREAT TOP OF PILE AND INSTALL PILING CAP PER GENERAL STRUCTURAL NOTE B.11 AND B.12.

4 TYPICAL PLATFORM SECTION
1"=1'-0"

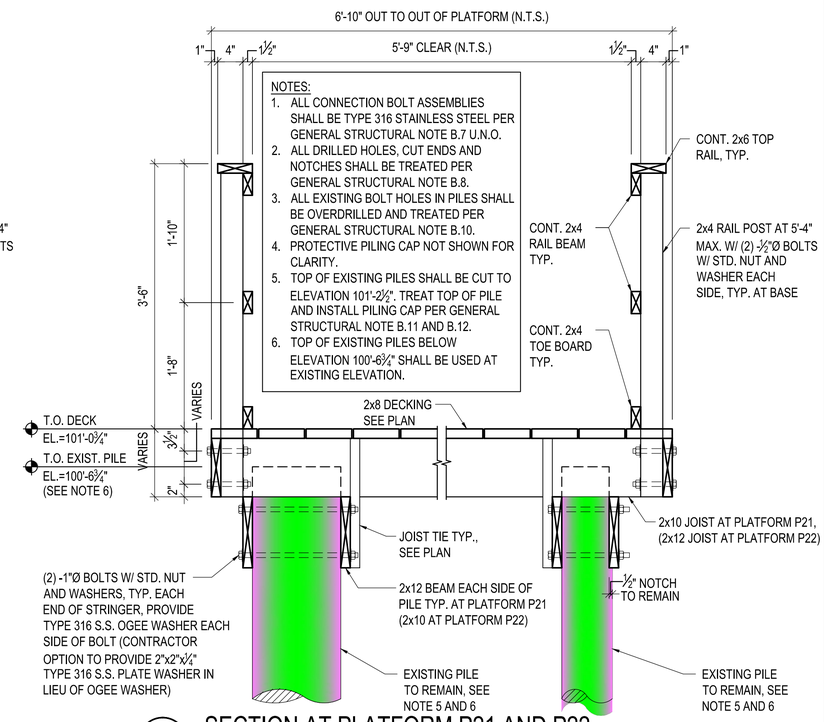

NOTES:
1. ALL CONNECTION BOLT ASSEMBLIES SHALL BE TYPE 316 STAINLESS STEEL PER GENERAL STRUCTURAL NOTE B.7 U.N.O.
2. ALL DRILLED HOLES, CUT ENDS AND NOTCHES SHALL BE TREATED PER GENERAL STRUCTURAL NOTE B.8.
3. ALL EXISTING BOLT HOLES IN PILES SHALL BE OVERDRILLED AND TREATED PER GENERAL STRUCTURAL NOTE B.10.
4. PROTECTIVE PILING CAP NOT SHOWN FOR CLARITY.
5. TOP OF EXISTING PILES SHALL BE CUT TO ELEVATION 101'-2½". TREAT TOP OF PILE AND INSTALL PILING CAP PER GENERAL STRUCTURAL NOTE B.11 AND B.12.
6. TOP OF EXISTING PILES BELOW ELEVATION 100'-6¾" SHALL BE USED AT EXISTING ELEVATION.

5 SECTION AT PLATFORM P21 AND P22
1"=1'-0"

0 6" 1' 2'
1" = 1'-0"

SYM	DESCRIPTION	DATE	APPR.
0	ISSUED FOR BID	6 NOV 2015	

NAVFAC

LICENSED PROFESSIONAL ENGINEER DAVID T. SWYDEN 25815 OKLAHOMA
SEAL

leidos
LEIDOS ENGINEERING, LLC
ONE WEST 3RD ST.
TULSA, OK 74103

DELTA AIRPORT CONSULTANTS, INC.
9711 Farrar Court, Suite 100
Richmond, Virginia 23236
phone: (804) 275-6301 • fax: (804) 275-6371
www.deltaairport.com
Delta Project No. 14072 A/E INFO

APPROVED
FOR COMMANDER NAVFAC
ACTIVITY
SATISFACTORY TO DATE
DES DPS DRW JGF CHK STW
PM / DM
BRANCH MANAGER
CHIEF ENG / ARCH
FIRE PROTECTION

DEPARTMENT OF THE NAVY
NAVAL FACILITIES ENGINEERING COMMAND
CIBIL CORE
NAVAL FACILITIES ENGINEERING COMMAND SOUTHEAST
NAS CORPUS CHRISTI
CORPUS CHRISTI, TEXAS
NAVAL AIR STATION JACKSONVILLE
NAS CORPUS CHRISTI AIRFIELD REPAIRS
RUNWAY 13R APPROACH LIGHTS
SECTIONS AND DETAILS

SCALE: AS NOTED
EPROJECT NO.:
CONSTR. CONTR. NO.
NAVFAC DRAWING NO. 15095295
SHEET 18 OF 33
S-501

DRAWFORM REVISION: 5 APRIL 2012

FILE NAME: P:\FDB\1641-GKC\AE\205113480_NAS_Corpus_Christi_Airfield_Repair\20_DESIGN\40_CAD\S\134800-04x-S-501.dwg LAYOUT NAME: 134800-04x-S-501 PLOTTED: Wednesday, November 04, 2015 - 8:44am USER: fountlorij

SHEET FORMAT IS 22" X 34". IF PRINTED SHEET IS NOT 22" X 34", THEN IT IS NOT TO SCALE

FROM RUNWAY 13R THRESHOLD TO EXISTING AIRFIELD VAULT BLDG 1241. SEE DUCT BANK & CIRCUIT SCHEDULE ON SHEET EA101

2-6	2A	2B
2C	D	E	*

PROVIDE ONE (1) FLA UNIT ON EACH RUNWAY 13R APPROACH LIGHT 5kV CABLE IN THE APPLICABLE PULLCAN. PROVIDE A TOTAL OF FOUR FLA UNITS.

PROVIDE ONE (1) FLA UNIT ON EACH RUNWAY 13R APPROACH LIGHT 5kV CABLE IN THE APPLICABLE PULLCAN. PROVIDE A TOTAL OF FOUR FLA UNITS.

RUNWAY 13R APPROACH LIGHTS

EXISTING DUCT

EXISTING DUCT

AIRFIELD LIGHTING VAULT BLDG 1241

FUTURE CONDUITS

FUTURE CONDUIT

FUTURE CONDUIT

6W-2"

7W-2"

50' TYP

100' TYP

TAXIWAY C

TAXIWAY Y

TAXIWAY Y

TAXIWAY B

TAXIWAY A

TAXIWAY E (EAST)

TAXIWAY E (MIDFIELD)

TAXIWAY E (WEST)

RUNWAY 17-35

RUNWAY 13L-31R

RUNWAY 04-22

RUNWAY 13R-31L

PAR

TWY Z

ELECTRICAL SYMBOL LEGEND

SYMBOL STATUS

EXISTING	REMOVE	PROVIDE	RELOCATE	ADJUST
			R	A

LEGEND

- EXISTING L-867 ELECTRICAL PULLCAN PLAZA (# INDICATES NUMBER OF CANS)
- L-867 ELECTRICAL PULLCAN PLAZA (# INDICATES NUMBER OF CANS) (A & B DESIGNATES TYPE OF PLAZA
- WIND CONE
- AIRFIELD PAPI
- CONDUIT TRENCHED IN PAVEMENT
- CONDUIT TRENCHED IN TURF
- CONDUIT BORED UNDER PAVEMENT
- FUTURE ELECTRICAL TRENCH

300 0 300 600

SCALE: 1"=300' FEET

SYM	DESCRIPTION	DATE	APPR
0	ISSUED FOR BID	6 NOV 15	

NAVFAC

STATE OF TEXAS
JON M. McCALMONT
100633
LICENSED PROFESSIONAL ENGINEER
6 NOV 15
SEAL

leidos
LEIDOS ENGINEERING, LLC
ONE WEST 3RD ST.
TULSA, OK 74103

DELTA AIRPORT CONSULTANTS, INC.
9711 Forest Court, Suite 100
Richmond, Virginia 23236
phone: (804) 275-8301 • fax: (804) 275-8371
www.deltaairport.com

Delta Project No. 14072 A/E INFO

APPROVED

FOR COMMANDER NAVFAC

ACTIVITY

SATISFACTORY TO DATE

DES EFC DRW MRM CHK MWK

PROJECT MANAGER

IPT TECH. BRANCH HEAD

CHIEF ENG/ARCH (CORE)

DEPARTMENT OF THE NAVY
NAVAL FACILITIES ENGINEERING COMMAND
CIBL CORE

NAVAL FACILITIES ENGINEERING COMMAND SOUTHEAST
NAVAL AIR STATION JACKSONVILLE

NAS CORPUS CHRISTI
CORPUS CHRISTI, TEXAS

NAS CORPUS CHRISTI AIRFIELD REPAIRS
RUNWAY 13R APPROACH LIGHTS

HOMERUN PLAN

SCALE: 1"=300'

EPROJECT NO.:

CONSTR. CONTR. NO.

NAVFAC DRAWING NO.
15095296

SHEET 19 OF 33

ES101

DRAWFORM REVISION: 5 APRIL 2012

FILE NAME: N:\14072\04 CAD\04-Approach Lights\1302443-5-ES101.dwg, ES101, 11/6/2015 1:24:04 PM, mmm

N:\14072\04 CAD\04-Approach Lights\1302443-5-ES101.dwg LAYOUT NAME: ES101 PLOTTED: Friday, November 06, 2015 - 1:24pm USER: mmm

MATCHLINE SHEET ED102

REMOVE EXISTING LIGHTS AND FOUNDATIONS, TYPICAL FOR ALL EXISTING APPROACH LIGHT FOUNDATIONS

EXISTING THRESHOLD LIGHT BAR TO REMAIN, PROTECT/MAINTAIN THE EXISTING THRESHOLD LIGHT BAR CIRCUITS AND CONDUITS.

TAXIWAY "Y"

8+00 7+00 6+00 5+00 4+00 3+00 2+00 1+00 0+00

EXISTING RUNWAY 13R-31L

REMOVE THE EXISTING AIRFIELD CABLES AND CUT-OFF/ ABANDON THE EXISTING CONDUITS BETWEEN LIGHTS. TYPICAL FOR ALL EXISTING IN-PAVMENT LIGHTING

REMOVE EXISTING IN-PAVEMENT STRUCTURES. TYPICAL FOR ALL EXISTING IN-PAVEMENT LIGHTING. OVER-CUT AS REQUIRED FOR NEW IN PAVEMENT APPROACH LIGHTS. FILL OVER-CUT WITH CONCRETE. SEE DETAIL

DEMOLITION NOTES:

1. REMOVE EXISTING WIRE, FIXTURE, FOUNDATION AND ABANDON/CUT-OFF EXISTING CONDUITS TO A MINIMUM DEPTH OF 18" BELOW FINISH GRADE PLUG CONDUIT OPENINGS AND BACKFILL PER DEMOLITION REPAIR IN-SHOULDER PAVEMENT & TURF AREA.

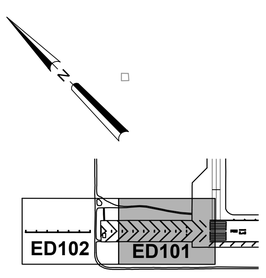

KEY MAP
N.T.S.

30 0 30 60
SCALE: 1"=30' FEET

SYM	DESCRIPTION	DATE	APPR
0	ISSUED FOR BID	6 NOV 15	

NAVFAC

STATE OF TEXAS
JON M. McCALMONT
100633
LICENSED PROFESSIONAL ENGINEER
6 NOV 15
SEAL

leidos
LEIDOS ENGINEERING, LLC
ONE WEST 3RD ST.
TULSA, OK 74103

DELTA AIRPORT CONSULTANTS, INC.
9711 Forrer Court, Suite 100
Richmond, Virginia 23236
phone: (804) 275-8301 • fax: (804) 275-8371
www.deltaairport.com

Delta Project No. 14072 A/E INFO

APPROVED
FOR COMMANDER NAVFAC
ACTIVITY
SATISFACTORY TO DATE
DES EFC DRW MRM CHK MWK
PROJECT MANAGER
IPT TECH. BRANCH HEAD
CHIEF ENG/ARCH (CORE)

DEPARTMENT OF THE NAVY
NAVAL FACILITIES ENGINEERING COMMAND
CIBL CORE
NAVAL FACILITIES ENGINEERING COMMAND SOUTHEAST
NAVAL AIR STATION JACKSONVILLE
NAS CORPUS CHRISTI
CORPUS CHRISTI, TEXAS
NAS CORPUS CHRISTI AIRFIELD REPAIRS
RUNWAY 13R APPROACH LIGHTS
DEMOLITION PLAN

SCALE: 1"=30'
EPROJECT NO.:
CONSTR. CONTR. NO.
NAVFAC DRAWING NO. 15095297
SHEET 20 OF 33
ED101
DRAWFORM REVISION: 5 APRIL 2012

N:\14072\04 CAD\04-Approach Lights\1302443-ED101.dwg, EA101, 11/6/2015 1:24:12 PM, mrm
FILE NAME: N:\14072\04 CAD\04-Approach Lights\1302443-ED101.dwg LAYOUT NAME: EA101 PLOTTED: Friday, November 06, 2015 - 1:24pm USER: mrm

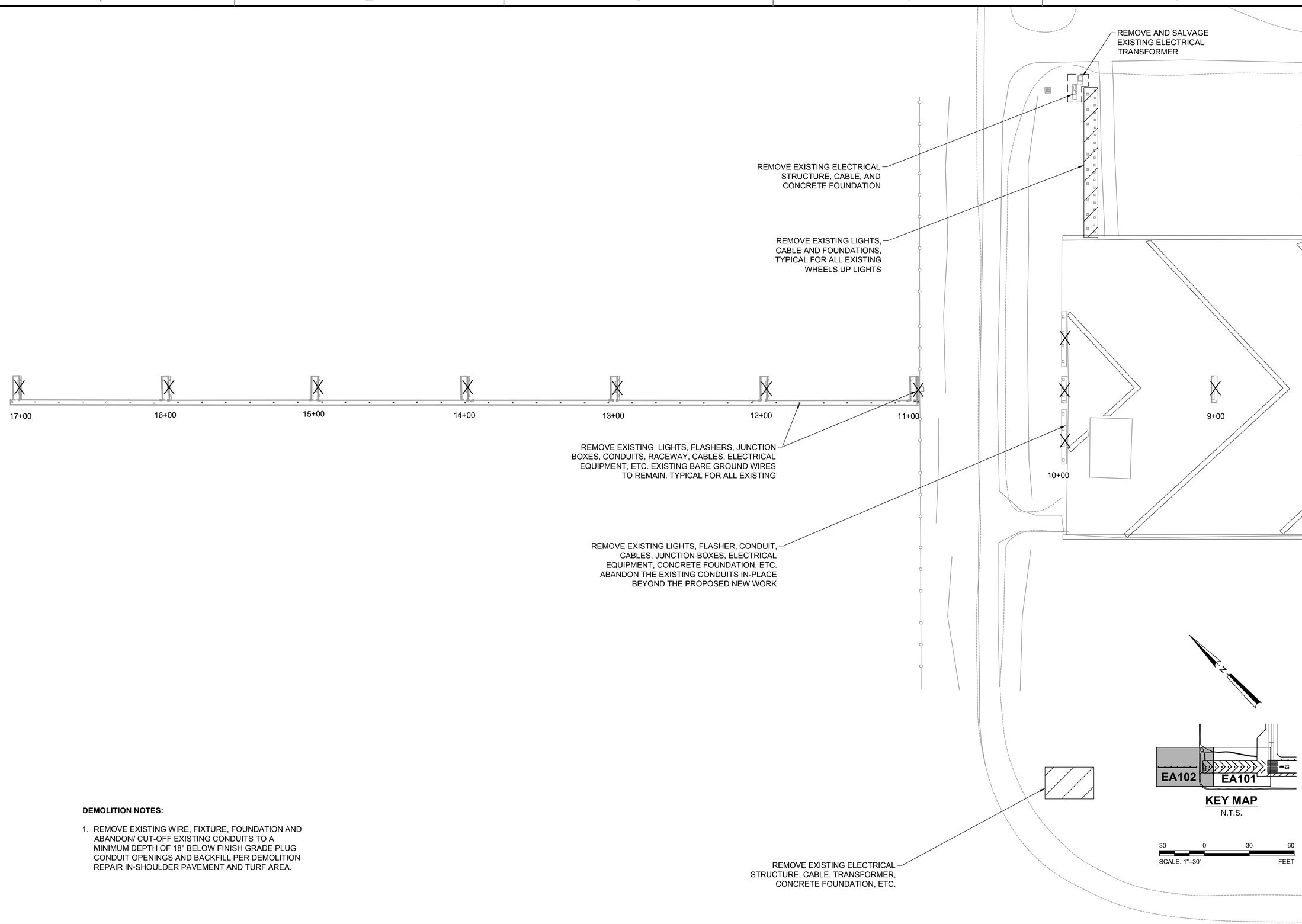

DEMOLITION NOTES:

1. REMOVE EXISTING WIRE, FIXTURE, FOUNDATION AND ABANDON/ CUT-OFF EXISTING CONDUITS TO A MINIMUM DEPTH OF 18" BELOW FINISH GRADE PLUG CONDUIT OPENINGS AND BACKFILL PER DEMOLITION REPAIR IN-SHOULDER PAVEMENT AND TURF AREA.

SYM	DESCRIPTION	DATE	APPR
0	ISSUED FOR BID	6 NOV 15	

NAVFAC

STATE OF TEXAS
JON M. McCALMONT
100633
LICENSED PROFESSIONAL ENGINEER
6 NOV 15
SEAL

leidos
LEIDOS ENGINEERING, LLC
ONE WEST 3RD ST.
TULSA, OK 74103

DELTA AIRPORT CONSULTANTS, INC.
9711 Forrer Court, Suite 100
Richmond, Virginia 23236
phone: (804) 275-8301 • fax: (804) 275-8371
www.deltaairport.com

Delta Project No. 14072 A/E INFO

APPROVED
FOR COMMANDER NAVFAC
ACTIVITY
SATISFACTORY TO DATE
DES EFC DRW MRM CHK MWK
PROJECT MANAGER
IPT TECH. BRANCH HEAD
CHIEF ENG/ARCH (CORE)

DEPARTMENT OF THE NAVY
NAVAL FACILITIES ENGINEERING COMMAND
CIBIL CORE
NAVAL FACILITIES ENGINEERING COMMAND SOUTHEAST
NAVAL AIR STATION JACKSONVILLE
NAS CORPUS CHRISTI
CORPUS CHRISTI, TEXAS
NAS CORPUS CHRISTI AIRFIELD REPAIRS
RUNWAY 13R APPROACH LIGHTS
DEMOLITION PLAN

SCALE: 1"=30'
EPROJECT NO.:
CONSTR. CONTR. NO.
NAVFAC DRAWING NO.
15095298
SHEET 21 OF 33
ED102

DRAWFORM REVISION: 5 APRIL 2012

FILE NAME: N:\14072\04 CAD\04-Approach Lights\1302443-ED102.dwg, EA102, 11/6/2015 1:24:20 PM, mrm
N:\14072\04 CAD\04-Approach Lights\1302443-ED102.dwg LAYOUT NAME: EA102 PLOTTED: Friday, November 06, 2015 - 1:24pm USER: mrm

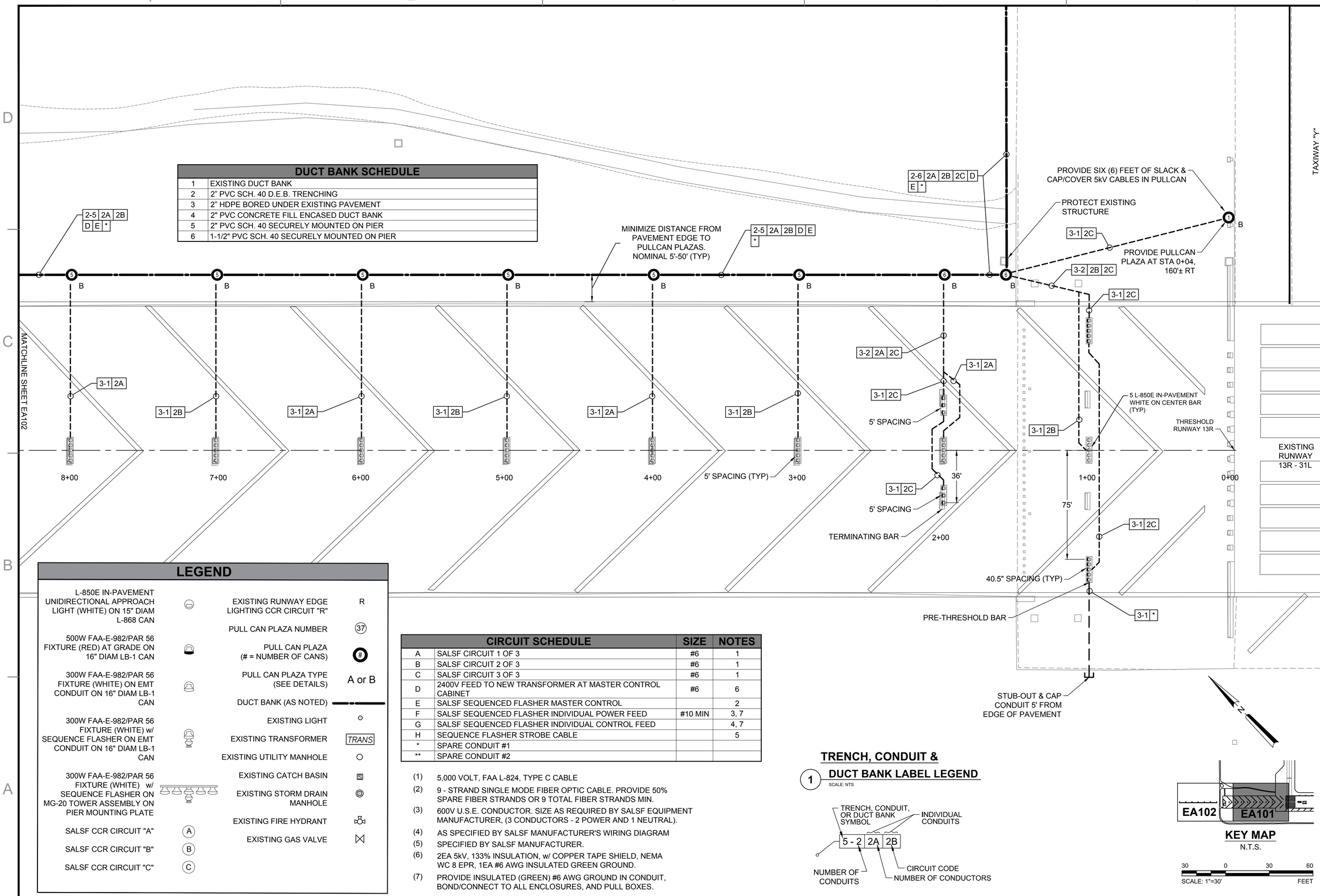

DUCT BANK SCHEDULE

1	EXISTING DUCT BANK
2	2" PVC SCH. 40 D.E.B. TRENCHING
3	2" HDPE BORED UNDER EXISTING PAVEMENT
4	2" PVC CONCRETE FILL ENCASED DUCT BANK
5	2" PVC SCH. 40 SECURELY MOUNTED ON PIER
6	1-1/2" PVC SCH. 40 SECURELY MOUNTED ON PIER

LEGEND

L-850E IN-PAVEMENT UNIDIRECTIONAL APPROACH LIGHT (WHITE) ON 15" DIAM L-868 CAN	EXISTING RUNWAY EDGE LIGHTING CCR CIRCUIT "R" — R
	PULL CAN PLAZA NUMBER — 37
500W FAA-E-982/PAR 56 FIXTURE (RED) AT GRADE ON 16" DIAM LB-1 CAN	PULL CAN PLAZA (# = NUMBER OF CANS) — #
300W FAA-E-982/PAR 56 FIXTURE (WHITE) ON EMT CONDUIT ON 16" DIAM LB-1 CAN	PULL CAN PLAZA TYPE (SEE DETAILS) — A or B
	DUCT BANK (AS NOTED)
300W FAA-E-982/PAR 56 FIXTURE (WHITE) w/ SEQUENCE FLASHER ON EMT CONDUIT ON 16" DIAM LB-1 CAN	EXISTING LIGHT
	EXISTING TRANSFORMER — TRANS
	EXISTING UTILITY MANHOLE
300W FAA-E-982/PAR 56 FIXTURE (WHITE) w/ SEQUENCE FLASHER ON MG-20 TOWER ASSEMBLY ON PIER MOUNTING PLATE	EXISTING CATCH BASIN
	EXISTING STORM DRAIN MANHOLE
	EXISTING FIRE HYDRANT
SALSF CCR CIRCUIT "A" — A	EXISTING GAS VALVE
SALSF CCR CIRCUIT "B" — B	
SALSF CCR CIRCUIT "C" — C	

CIRCUIT SCHEDULE

		SIZE	NOTES
A	SALSF CIRCUIT 1 OF 3	#6	1
B	SALSF CIRCUIT 2 OF 3	#6	1
C	SALSF CIRCUIT 3 OF 3	#6	1
D	2400V FEED TO NEW TRANSFORMER AT MASTER CONTROL CABINET	#6	6
E	SALSF SEQUENCED FLASHER MASTER CONTROL		2
F	SALSF SEQUENCED FLASHER INDIVIDUAL POWER FEED	#10 MIN	3, 7
G	SALSF SEQUENCED FLASHER INDIVIDUAL CONTROL FEED		4, 7
H	SEQUENCE FLASHER STROBE CABLE		5
*	SPARE CONDUIT #1		
**	SPARE CONDUIT #2		

(1) 5,000 VOLT, FAA L-824, TYPE C CABLE

(2) 9 - STRAND SINGLE MODE FIBER OPTIC CABLE. PROVIDE 50% SPARE FIBER STRANDS OR 9 TOTAL FIBER STRANDS MIN.

(3) 600V U.S.E. CONDUCTOR. SIZE AS REQUIRED BY SALSF EQUIPMENT MANUFACTURER, (3 CONDUCTORS - 2 POWER AND 1 NEUTRAL).

(4) AS SPECIFIED BY SALSF MANUFACTURER'S WIRING DIAGRAM

(5) SPECIFIED BY SALSF MANUFACTURER.

(6) 2EA 5kV, 133% INSULATION, w/ COPPER TAPE SHIELD, NEMA WC 8 EPR, 1EA #6 AWG INSULATED GREEN GROUND.

(7) PROVIDE INSULATED (GREEN) #6 AWG GROUND IN CONDUIT, BOND/CONNECT TO ALL ENCLOSURES, AND PULL BOXES.

1 TRENCH, CONDUIT & DUCT BANK LABEL LEGEND

SCALE: NTS

KEY MAP
N.T.S.

30 0 30 60
SCALE: 1"=30' FEET

0	ISSUED FOR BID	6 NOV 15	
SYM	DESCRIPTION	DATE	APPR

NAVFAC

STATE OF TEXAS — JON M. McCALMONT — 100633 — LICENSED PROFESSIONAL ENGINEER — 6 NOV 15 — SEAL

leidos
LEIDOS ENGINEERING, LLC
ONE WEST 3RD ST.
TULSA, OK 74103

DELTA AIRPORT CONSULTANTS, INC.
9711 Forror Court, Suite 100
Richmond, Virginia 23236
phone: (804) 275-8301 • fax: (804) 275-8371
www.deltaairport.com
Delta Project No. 14072 A/E INFO

APPROVED
FOR COMMANDER NAVFAC
ACTIVITY
SATISFACTORY TO DATE
DES EFC DRW MRM CHK MWK
PROJECT MANAGER
IPT TECH. BRANCH HEAD
CHIEF ENG/ARCH (CORE)

DEPARTMENT OF THE NAVY
NAVAL FACILITIES ENGINEERING COMMAND
CIBLI CORE
NAVAL FACILITIES ENGINEERING COMMAND SOUTHEAST
NAVAL AIR STATION JACKSONVILLE
NAS CORPUS CHRISTI
CORPUS CHRISTI, TEXAS

NAS CORPUS CHRISTI AIRFIELD REPAIRS
RUNWAY 13R APPROACH LIGHTS
ELECTRICAL LAYOUT

SCALE: 1"=30'
EPROJECT NO.:
CONSTR. CONTR. NO.
NAVFAC DRAWING NO. 15095299
SHEET 22 OF 33

EA101

DRAWFORM REVISION: 5 APRIL 2012

N:\14072\04 CAD\04-Approach Lights\1302443-EA101.dwg, EA101, 11/6/2015 1:24:28 PM, mrm
FILE NAME: N:\14072\04 CAD\04-Approach Lights\1302443-EA101.dwg LAYOUT NAME: EA101 PLOTTED: Friday, November 06, 2015 - 1:24pm USER: mrm

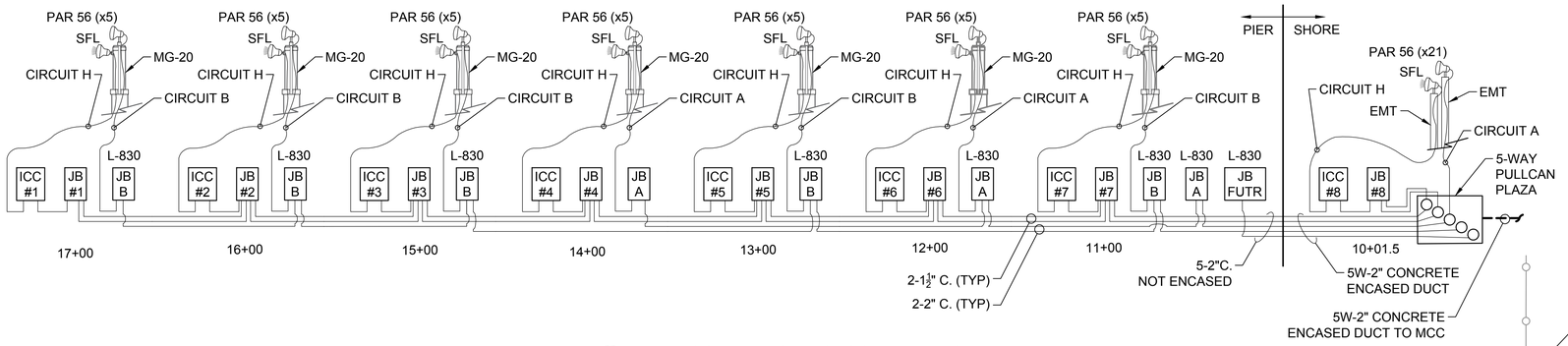

2 PIER CONDUIT & ENCLOSURE LAYOUT DETAIL

SCALE: NTS

1 TRENCH, CONDUIT & DUCT BANK LABEL LEGEND

SCALE: NTS

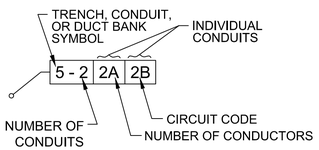

NOTES:

1. PROVIDE EXPANSION COUPLING AT MID-POINT OF EACH CONDUIT RUN BETWEEN ENCLOSURES ON THE PIER.
2. PIER ENCLOSURES MUST BE NEMA 4X, 316 STAINLESS STEEL WITH WELDED THREADED HUBS AND CONTINUOUS HINGES. PROVIDE A PAD LOCK HASP ON THE DOOR. PROVIDE AN ALUMINUM MOUNTING BACK BOARD IN THE L-830 JUNCTION BOXES ONLY. NEATLY TRAIN AND SECURE ALL CABLES WITH AN APPROVED NYLON CABLE CLAMP ON THE BACKBOARD.
   - ICC - SIZE PER MANUFACTURER REQUIREMENTS
   - JB FOR 1-1,500 WATT L-830 TRANSFORMER - 24" x 24" x 12" (MIN)
   - JB FOR 2-500 WATT L-830 TRANSFORMER - 24" x 24" x 10" (MIN)
   - JB FOR 3-500 WATT L-830 TRANSFORMER - 30" x 30" x 10" (MIN)
   - JB FOR ICC POWER AND CONTROL - SIZE PER MANUFACTURER REQUIREMENTS.
3. PROVIDE 3/4" - 316 STAINLESS STEEL BARE OR PVC COATED FLEXIBLE CONDUIT WITH 316 STAINLESS STEEL CONNECTORS FROM ENCLOSURES TO MG-20 LIGHT BASE ASSEMBLY. SECURE FLEXIBLE CONDUIT WITH 316 STAINLESS STEEL STRAPS/HANGAERS AND HARDWARE AT 18" MAX. SPACING.
4. MOUNT INDIVIDUAL CONTROL CABINET (ICC) 12" ABOVE PIER HANDRAIL SIMILAR TO EXISTING ICC UNITS. PROVIDE 2-2" MIN. 316 STAINLESS STEEL PIPE AND FLOOR FLANGE SUPPORTS PER UNIT. FASTEN FLOOR FLANGES TO HAND RAIL WITH 316 S.S. BOLTS. GROUND/BOND THE EXTERIOR AND INTERIOR OF EACH ICC ENCLOSURE WITH THE BARE AND INSULATED #6 CU. WIRE.

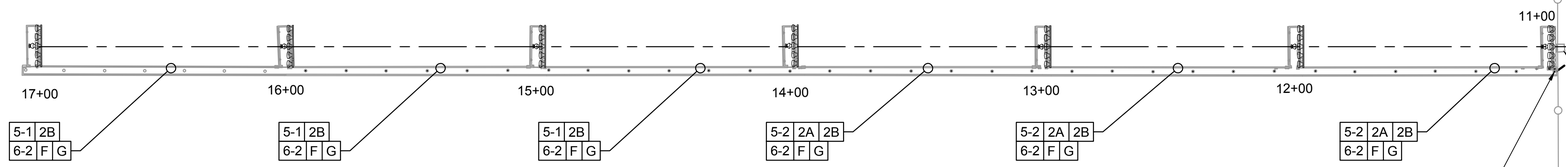

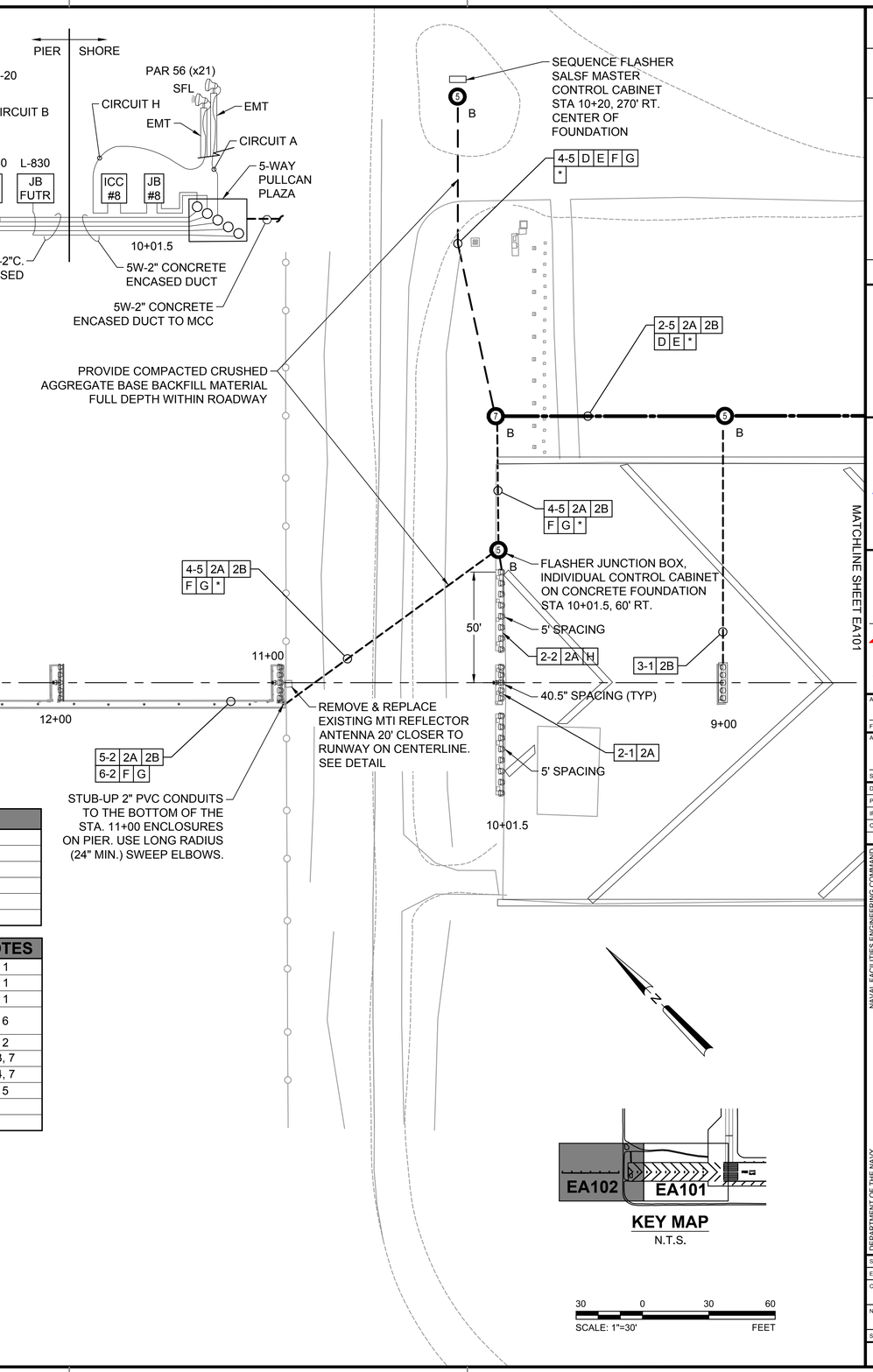

LEGEND

L-850E IN-PAVEMENT UNIDIRECTIONAL APPROACH LIGHT (WHITE) ON 15" DIAM L-868 CAN	EXISTING RUNWAY EDGE LIGHTING CCR CIRCUIT "R" — R
500W FAA-E-982/PAR 56 FIXTURE (RED) AT GRADE ON 16" DIAM LB-1 CAN	PULL CAN PLAZA NUMBER — 37
300W FAA-E-982/PAR 56 FIXTURE (WHITE) ON EMT CONDUIT ON 16" DIAM LB-1 CAN	PULL CAN PLAZA (# = NUMBER OF CANS) — #
300W FAA-E-982/PAR 56 FIXTURE (WHITE) w/ SEQUENCE FLASHER ON EMT CONDUIT ON 16" DIAM LB-1 CAN	PULL CAN PLAZA TYPE (SEE DETAILS) — A or B
300W FAA-E-982/PAR 56 FIXTURE (WHITE) w/ SEQUENCE FLASHER ON MG-20 TOWER ASSEMBLY ON PIER MOUNTING PLATE	DUCT BANK (AS NOTED)
SALSF CCR CIRCUIT "A" — A	EXISTING LIGHT
SALSF CCR CIRCUIT "B" — B	EXISTING TRANSFORMER — TRANS
SALSF CCR CIRCUIT "C" — C	EXISTING UTILITY MANHOLE
	EXISTING CATCH BASIN
	EXISTING STORM DRAIN MANHOLE
	EXISTING FIRE HYDRANT
	EXISTING GAS VALVE

DUCT BANK SCHEDULE

1	EXISTING DUCT BANK
2	2" PVC SCH. 40 D.E.B. TRENCHING
3	2" HDPE BORED UNDER EXISTING PAVEMENT
4	2" PVC CONCRETE FILL ENCASED DUCT BANK
5	2" PVC SCH. 40 SECURELY MOUNTED ON PIER
6	1-1/2" PVC SCH. 40 SECURELY MOUNTED ON PIER

CIRCUIT SCHEDULE

		SIZE	NOTES
A	SALSF CIRCUIT 1 OF 3	#6	1
B	SALSF CIRCUIT 2 OF 3	#6	1
C	SALSF CIRCUIT 3 OF 3	#6	1
D	2400V FEED TO NEW TRANSFORMER AT MASTER CONTROL CABINET	#6	6
E	SALSF SEQUENCED FLASHER MASTER CONTROL		2
F	SALSF SEQUENCED FLASHER INDIVIDUAL POWER FEED	#10 MIN	3, 7
G	SALSF SEQUENCED FLASHER INDIVIDUAL CONTROL FEED		4, 7
H	SEQUENCE FLASHER STROBE CABLE		5
*	SPARE CONDUIT #1		
**	SPARE CONDUIT #2		

(1) 5,000 VOLT, FAA L-824, TYPE C CABLE

(2) 9 - STRAND SINGLE MODE FIBER OPTIC CABLE. PROVIDE 50% SPARE FIBER STRANDS OR 9 TOTAL FIBER STRANDS MIN.

(3) 600V U.S.E. CONDUCTOR. SIZE AS REQUIRED BY SALSF EQUIPMENT MANUFACTURER, (3 CONDUCTORS - 2 POWER AND 1 NEUTRAL).

(4) AS SPECIFIED BY SALSF MANUFACTURER'S WIRING DIAGRAM

(5) SPECIFIED BY SALSF MANUFACTURER.

(6) 2EA 5kV, 133% INSULATION, w/ COPPER TAPE SHIELD, NEMA WC 8 EPR, 1EA #6 AWG INSULATED GREEN GROUND.

(7) PROVIDE INSULATED (GREEN) #6 AWG GROUND IN CONDUIT, BOND/CONNECT TO ALL ENCLOSURES, AND PULL BOXES.

KEY MAP
N.T.S.

30 0 30 60
SCALE: 1"=30' FEET

SYM	DESCRIPTION	DATE	APPR
0	ISSUED FOR BID	6 NOV 15	

NAVFAC

STATE OF TEXAS — JON M. McCALMONT — 100633 — LICENSED PROFESSIONAL ENGINEER — 6 NOV 15 — SEAL

leidos — LEIDOS ENGINEERING, LLC, ONE WEST 3RD ST., TULSA, OK 74103

DELTA AIRPORT CONSULTANTS, INC. — 9711 Ferror Court, Suite 100, Richmond, Virginia 23236 — phone: (804) 275-8301 • fax: (804) 275-8371 — www.deltaairport.com — Delta Project No. 14072 A/E INFO

APPROVED
FOR COMMANDER NAVFAC
ACTIVITY
SATISFACTORY TO DATE
DES EFC DRW MRM CHK MWK
PROJECT MANAGER
IPT TECH. BRANCH HEAD
CHIEF ENG/ARCH (CORE)

DEPARTMENT OF THE NAVY — NAVAL FACILITIES ENGINEERING COMMAND — NAVAL FACILITIES ENGINEERING COMMAND SOUTHEAST — NAVAL AIR STATION JACKSONVILLE — CIBIL CORE

NAS CORPUS CHRISTI — CORPUS CHRISTI, TEXAS

NAS CORPUS CHRISTI AIRFIELD REPAIRS RUNWAY 13R APPROACH LIGHTS

ELECTRICAL LAYOUT

SCALE: 1"=30'
EPROJECT NO.:
CONSTR. CONTR. NO.
NAVFAC DRAWING NO. 15095300
SHEET 23 OF 33
EA102

DRAWFORM REVISION: 5 APRIL 2012

FILE NAME: N:\14072\04 CAD\04-Approach Lights\1302443-EA102.dwg, EA102, 11/6/2015 1:24:37 PM, mrm
N:\14072\04 CAD\04-Approach Lights\1302443-EA102.dwg LAYOUT NAME: EA102 PLOTTED: Friday, November 06, 2015 - 1:24pm USER: mrm

TAXIWAY Y

OBSCURE EXISTING RUNWAY STRIPING BY USE OF COVERING WITH A PAINT COLOR-MATCHED TO THE SURROUNDING PAVEMENT UPON COMPLETION OF WORK ASSOCIATED WITH REQUIRING TEMPORARY RELOCATED THRESHOLD, THE RUNWAY STRIPING SHALL BE PAINTED TO PRE-CONSTRUCTION CONFIGURATION USING RETROREFLECTIVE AVIATION WHITE PAINT.

CONVERT EXISTING RUNWAY EDGE LIGHTS TO R/R DURING TEMPORARY THRESHOLD PERIOD R●R (TYP)

DEACTIVATE EXISTING PAPI

INSTALL EIGHT TEMPORARY THRESHOLD LIGHTS WITH G/R LENS. EACH SIDE. SEE DETAIL. G◑R (TYP)

CONVERT EXISTING RUNWAY EDGE LIGHT TO G/R (TYP).

TEMPORARY RUNWAY 13R DESIGNATION STRIPES. SEE DETAIL.

20'

RUNWAY 31L-13R

TEMPORARY ARROW STRIPES. SEE DETAILS.

TEMPORARY RUNWAY 13R LANDING THRESHOLD. SEE DETAILS.

5' (TYP)

10' (TYP)

TEMPORARY THRESHOLD SHALL BE INSTALLED IN LOCATION ADJACENT TO EXISTING RUNWAY EDGE LIGHTS, APPROX 1,200' FROM EXISTING RUNWAY END

GLIDE SLOPE EQUIPMENT

GLIDE SLOPE SHELTER

TEMPORARY ARROWHEAD STRIPES. SEE DETAILS.

CONVERT 10 RUNWAY END LIGHTS TO RED UNIDIRECTIONAL DURING TEMP THRESHOLD PERIOD. DEACTIVATE REMAINING THRESHOLD, APPROACH, AND RUNWAY END LIGHTS.

50 0 50 100

SCALE: 1"=50' FEET

SYM	DESCRIPTION	DATE	APPR
0	ISSUED FOR BID	6 NOV 15	

NAVFAC

STATE OF TEXAS
JON M. McCALMONT
100633
LICENSED PROFESSIONAL ENGINEER
6 NOV 15
SEAL

leidos
LEIDOS ENGINEERING, LLC
ONE WEST 3RD ST.
TULSA, OK 74103

DELTA AIRPORT CONSULTANTS, INC.
9711 Forror Court, Suite 100
Richmond, Virginia 23236
phone: (804) 275-8301 • fax: (804) 275-8371
www.deltaairport.com

Delta Project No. 14072 A/E INFO

APPROVED

FOR COMMANDER NAVFAC

ACTIVITY

SATISFACTORY TO DATE

DES EFC DRW MJH CHK

PROJECT MANAGER

IPT TECH. BRANCH HEAD

CHIEF ENG/ARCH (CORE)

DEPARTMENT OF THE NAVY
NAVAL FACILITIES ENGINEERING COMMAND
CIBIL CORE

NAVAL FACILITIES ENGINEERING COMMAND SOUTHEAST
NAVAL AIR STATION JACKSONVILLE

NAS CORPUS CHRISTI

CORPUS CHRISTI, TEXAS

NAS CORPUS CHRISTI AIRFIELD REPAIRS
RUNWAY 13R APPROACH LIGHTS

TEMPORARY THRESHOLD LAYOUT

SCALE: 1" = 50'

EPROJECT NO.:

CONSTR. CONTR. NO.

NAVFAC DRAWING NO.
15095301

SHEET 24 OF 33

EA103

DRAWFORM REVISION: 5 APRIL 2012

N:\14072\04 CAD\04-Approach Lights\1302443-EA103.dwg, EA103, 11/6/2015 1:24:47 PM, mrm

FILE NAME: N:\14072\04 CAD\04-Approach Lights\1302443-EA103.dwg LAYOUT NAME: EA103 PLOTTED: Friday, November 06, 2015 - 1:24pm USER: mrm