REVISIONS			
SYM.	DESCRIPTION	DATE	APPROVED
A	AS BUILT REVISIONS	6-23-80	RJO

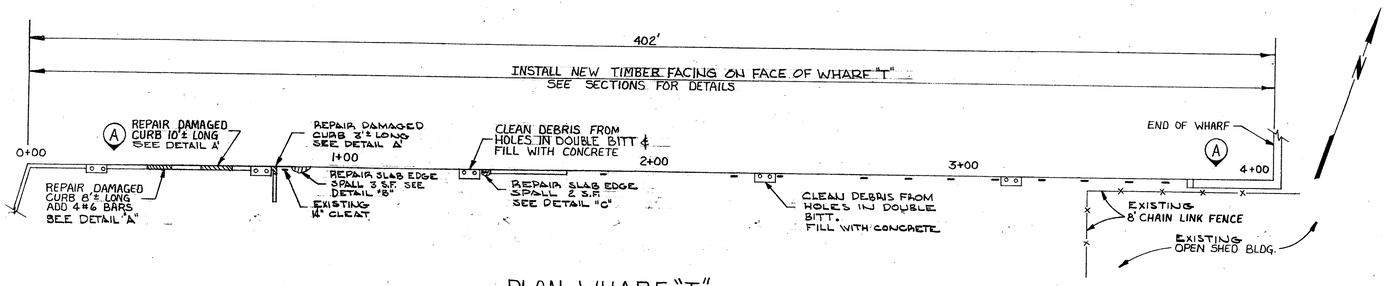

PLAN-WHARF "T"

SCALE: 1" = 20'

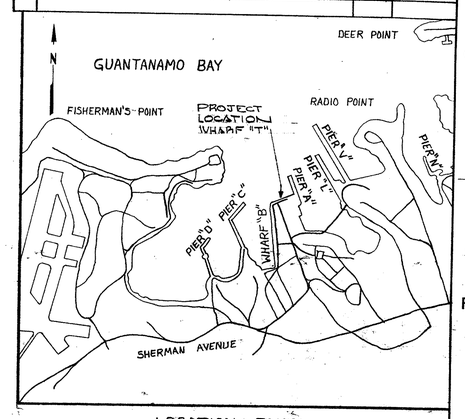

LOCATION PLAN

SCALE: 1" = 1000'

GENERAL NOTES:

1. INSTALL NEW TREATED TIMBER FACING ON WHARF FACE USING NEW GALVANIZED T HEAD BOLTS, NUTS AND CAST IRON OGEE WASHERS. RE-USE EXISTING T HEAD BOLT INSERTS WHERE POSSIBLE. ASSUME 70% OF EXISTING INSERTS ARE RE-USEABLE.
2. INSTALL NEW GALVANIZED 1" Ø EXPANSION BOLTS AND CAST IRON OGEE WASHERS FOR CONNECTIONS WHERE "T" HEAD BOLTS DO NOT EXIST, OR WHERE INSERTS HAVE DETERIORATED BEYOND USEFULNESS.
3. ALL TIMBER FACING SHALL BE TREATED SOUTHERN PINE.
4. COUNTERBORE FACING TIMBERS AT ALL CONNECTIONS TO OBTAIN 1" MIN. CLEARANCE BETWEEN BOLT HEAD AND FACE OF TIMBER
5. PATCHING CONCRETE SHALL HAVE A MINIMUM COMPRESSIVE STRENGTH OF 3,000 PSI AT 28 DAYS.
6. REINFORCING STEEL SHALL BE ASTM A-615 GRADE 40.
7. SANDBLAST AND PAINT ALL DOUBLE BITTS WITH A COAL TAR BASE COATING, 30 MIL THICKNESS, IN ACCORDANCE WITH MIL-C-18480A "COATING COMPOUND, BITUMINOUS, COAL TAR BASE".

DETAIL A

REMOVE DAMAGED CONC. AND REINF. EXPOSE AN ADDITIONAL 1'-0" OF EXISTING REINF AT EACH END. PROVIDE 4 #6 BARS AND LAP 1'-0" WITH EXISTING EXPOSED REINF. PROVIDE #4 ⊡ AT 1'-0". PATCH WITH CONCRETE.

DETAIL A'

REMOVE DAMAGED CONCRETE TO EXPOSE EXISTING REINF. TAKE CARE NOT TO DAMAGE EXISTING REINF. PATCH W/ CONCRETE

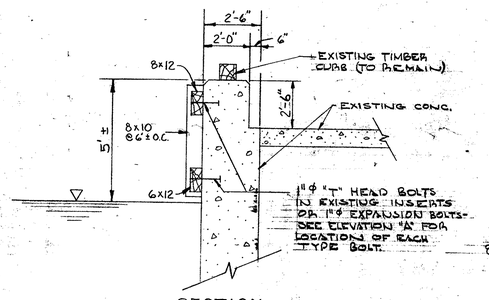

SECTION
STA. 0+00 to 0+80
SCALE: 3/8" = 1'-0"

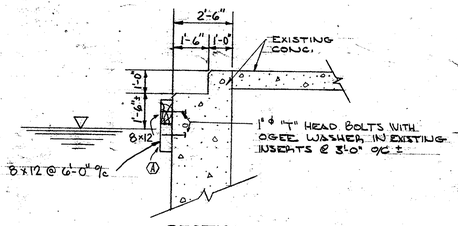

SECTION
STA. 1+48 to 1+74
SCALE: 3/8" = 1'-0"

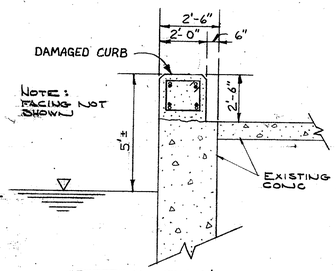

DETAIL A & A'
REPAIR OF DAMAGED CURB
SCALE: 3/8" = 1'-0"

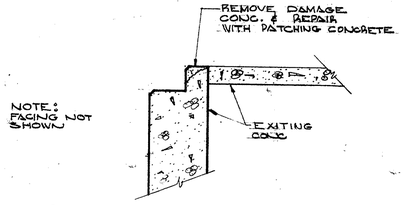

DETAIL "C"
REPAIR OF SLAB EDGE SPALL
SCALE 3/8" = 1'-0"

NOTE: SPACING OF TIMBER AND CONNECTIONS MAY VARY TO MATCH SPACING OF BOLT INSERTS.

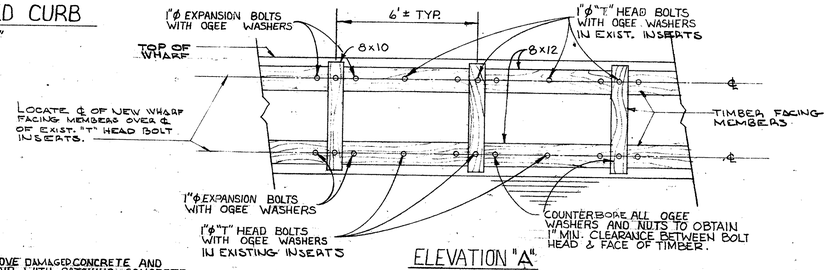

ELEVATION "A"
SCALE: 3/8" = 1'-0"

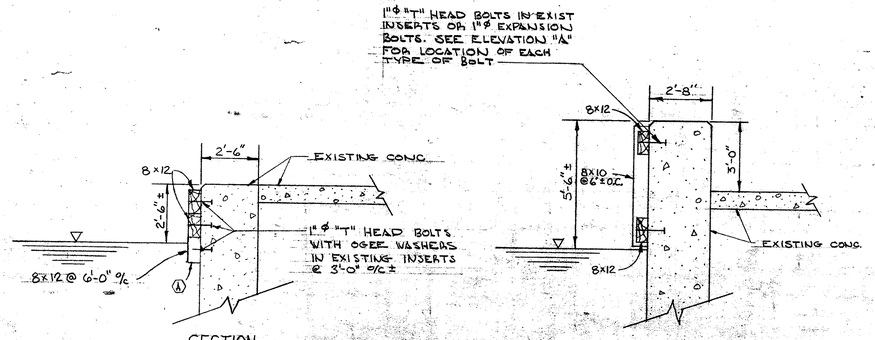

SECTION
STA. 0+80 to 1+48 AND 1+74 to 3+73
SCALE: 3/8" = 1'-0"

SECTION
STA. 3+73 to 4+02
SCALE: 3/8" = 1'-0"

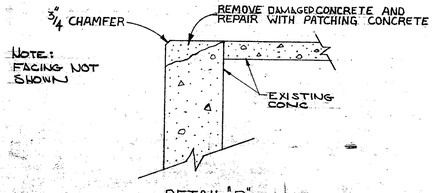

DETAIL "B"
REPAIR OF SLAB EDGE SPALLS
SCALE: 3/8" = 1'-0"

GRAPHIC SCALES

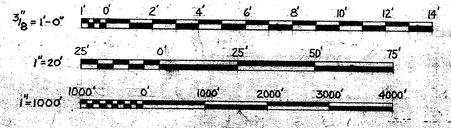

EFD DWG. NO.	1201666
WORK REQ. NO.	34304568
DES.	Richard J. Olsen, P.E.
DRWN.	ELMORE
TR.	
CHK.	J. Thomas, P.E. F.P.
BR. MGR.	F.P. Nicholas P.E.
DES. DIR.	
SATISFACTORY TO	DATE
APPROVED	DATE 2 MAR 1977
	FOR EFD FOR COMMANDER NAVFAC

DEPARTMENT OF THE NAVY — NAVAL FACILITIES ENGINEERING COMMAND
ATLANTIC DIVISION
NAVAL STATION — NORFOLK, VA.

U.S. NAVAL STATION GUANTANAMO BAY, CUBA

REPAIRS TO WHARF "T"

SIZE	CODE IDENT. NO.	NAVFAC DRAWING NO.
F	80091	4020166
		CONTR. CONTR. NO. N62470-74-B-1799
SCALE NOTED	SPEC. 05-74-1799	SHEET 1 OF 1

OILY WASTE/WASTE OIL COLLECTION
PIER A AND WHARVES B, T, AND U
NAVAL STATION GUANTANAMO BAY, CUBA

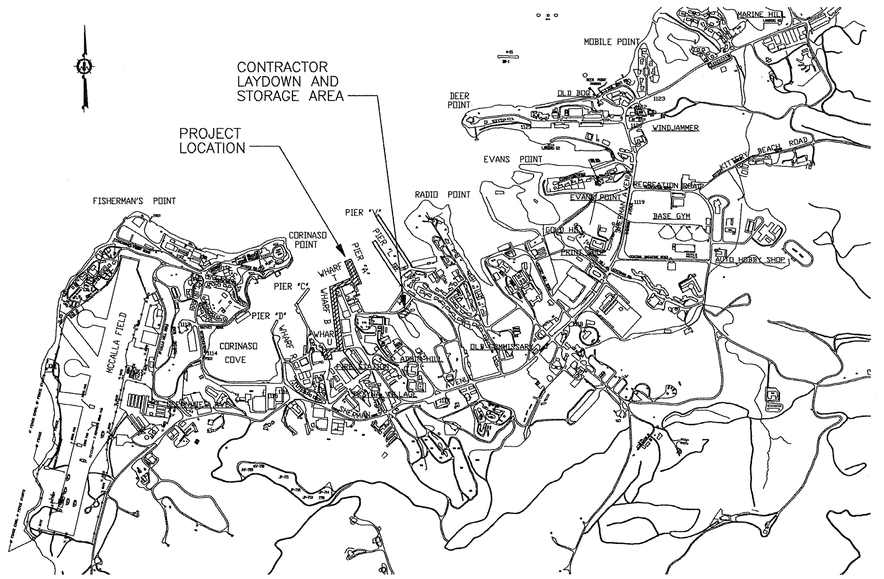

VICINITY MAP

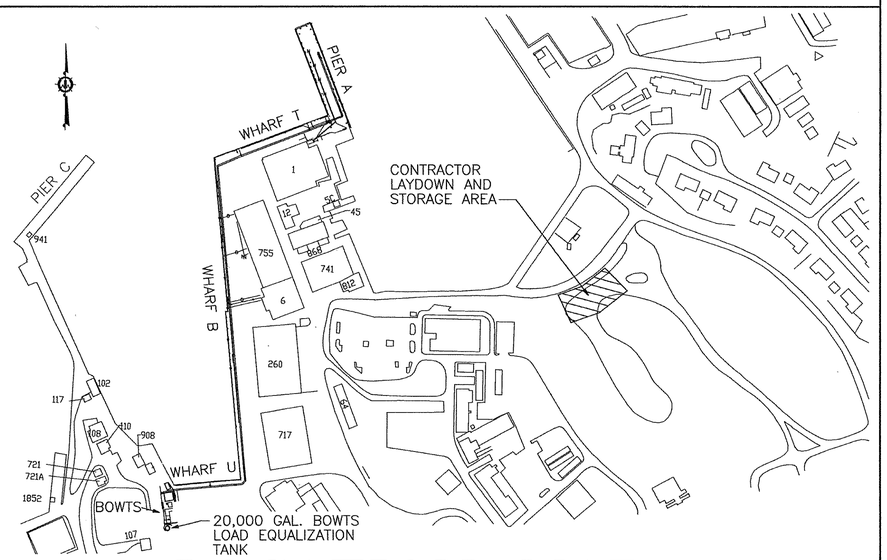

LOCATION MAP

DRAWING INDEX		
SHEET No.	NAVFAC No.	SHEET TITLE
T-1	4407592	TITLE SHEET AND DRAWING INDEX
T-2	4407593	LEGEND, ABBREVIATIONS, AND SCHEDULES
S-1	4407594	SITE PLAN
C-1	4407595	123.15' OF OW/WO ABOVEGROUND PIPING
C-2	4407596	STA. 0+04.00 TO STA. 2+70.00
C-3	4407597	STA. 2+70.00 TO STA. 5+40.00
C-4	4407598	STA. 5+40.00 TO STA. 8+10.00
C-5	4407599	STA. 8+10.00 TO STA. 10+80.00
C-6	4407600	STA. 10+80.00 TO STA. 13+50.00
C-7	4407601	STA. 13+50.00 TO STA. 16+20.00
C-8	4407602	STA. 16+20.00 TO STA. 18+40.00
C-9	4407603	STA. 18+40.00 TO STA. 19+93.00
C-10	4407604	SECTIONS
C-11	4407605	SECTIONS
C-12	4407606	SECTIONS
C-13	4407607	TRANSFER PUMP STA. DETAILS

DRAWING INDEX		
SHEET No.	NAVFAC No.	SHEET TITLE
C-14	4407608	DETAILS
C-15	4407609	SOIL BORINGS
C-16	4407610	SOIL BORINGS
C-17	4407611	SOIL BORINGS
S-2	4407612	ELECTRICAL SITE PLAN
E-1	4407613	LEGEND AND ABBREVIATIONS
E-2	4407614	ELECTRICAL SITE PLAN BOWTS AREA
E-3	4407615	STA. 0+04.00 TO STA. 2+70.00
E-4	4407616	STA. 2+70.00 TO STA. 5+40.00
E-5	4407617	STA. 5+40.00 TO STA. 8+10.00
E-6	4407618	STA. 8+10.00 TO STA. 10+80.00
E-7	4407619	STA. 10+80.00 TO STA. 13+50.00
E-8	4407620	STA. 13+50.00 TO STA. 16+20.00
E-9	4407621	STA. 16+20.00 TO STA. 18+40.00
E-10	4407622	STA. 18+40.00 TO STA. 19+93.00
E-11	4407623	PANEL SCHEDULES

GENERAL NOTES

1. ALL DISTANCES AND ELEVATIONS ARE IN FEET.
2. ELEVATIONS ARE BASED ON U.S. NAVAL BASE GUANTANAMO BAY, CUBA BENCH MARK SYSTEM, AS INDICATED ON THE DRAWINGS.
3. THE LOCATION AND ELEVATION OF EXISTING STRUCTURES, PIPING, AND UTILITIES SHOWN ARE BASED ON BEST AVAILABLE DATA. FIELD VERIFY ALL UTILITIES, PIPING AND STRUCTURES PRIOR TO CONSTRUCTION OF NEW PIPING AND UTILITIES.
4. LOCATE BASED ON SURVEY PERFORMED BY MR. TOM GUFFEY, CLS FROM WILEY AND WILSON ON FEBRUARY (4 TO 9), 1998.
5. THE EXISTING DIESEL FUEL MARINE SYSTEM AND POTABLE WATER SUPPLY SYSTEM SHALL REMAIN IN OPERATION DURING CONSTRUCTION. PERFORM ALL WORK TO ENSURE CONTINUOUS OPERATION OF THESE FACILITIES.
6. OBTAIN APPROVAL OF THE CONTRACTING OFFICER BEFORE BEGINNING ANY EXCAVATIONS ON THE PIER AND WHARVES.
7. DURING CONSTRUCTION PIER A, WHARVES B, T, U, ACCESSWAYS AND ROADWAYS SHALL REMAIN IN OPERATION. ONE HALF OF WHARF B WILL BE MADE AVAILABLE FOR THE CONTRACTOR TO PERFORM WORK. AT NO TIME CAN WHARF B BE COMPLETELY SHUT DOWN FOR CONSTRUCTION. THE NAVY WILL REQUIRE ACCESS TO THE SOUTH HALF OF WHARF B EVERY OTHER WEEK FOR THREE DAYS. COORDINATE CONSTRUCTION WORK IN THIS AREA WITH THE CONTRACTING OFFICER.
8. PROVIDE PAINTED LABEL (STENCILED) ON STEEL AND CONCRETE TRENCH COVERS TO IDENTIFY LOCATION OF ALL AIR RELEASE VALVES AND SUMP PUMPS. LETTERS WILL BE 1.5 INCHES HIGH (MINIMUM), BLACK IN COLOR.
9. CONTRACTOR CANNOT WORK IN TRENCH UNTIL CONCURRENT WATER LINE WORK PERFORMED UNDER CONSTRUCTION CONTRACT NUMBER N62470-99-B-9146 IS COMPLETE. TIME OF COMPLETION IS ESTIMATED TO BE 3 MONTHS. COORDINATE WITH CONTRACTING OFFICER.

REVISIONS

STA.	DESCRIPTION	DATE	APPROVED

A/E DESIGN C.H. DRAWN C.H. REVIEW J.H.
CHIEF ARCH./ ENGR.
PROJECT MANAGER
FIRE PROTECTION
BRANCH MANAGER
DESIGN DIRECTOR

GEE & JENSON
Engineers•Architects•Planners, Inc.
Florida 3345 – Tx 0003534 – AA C00056
A/E CONTRACT NO. 69-92-3001

APPROVED ACTIVITY – SATISFACTORY TO
APPROVED TOE EFD TOE COMMANDER NAVFAC

SEAL

DEPARTMENT OF THE NAVY
NAVAL STATION
NAVAL FACILITIES ENGINEERING COMMAND
ATLANTIC DIVISION
NORFOLK, VIRGINIA
U.S. NAVAL STATION GUANTANAMO BAY, CUBA
OILY WASTE/WASTE OIL COLLECTION
PIER A AND WHARVES B, T, AND U
Title Sheet and Drawing Index

CODE ID. NO. 80091 SIZE D
SCALE:
EFD NO.
STA. PROJ. NO.
SPEC. NO. 05-00-4505
CONSTR. CONTR. NO. N62470-00-C-4505
NAVFAC DRAWING NO. 4407592
SHEET OF
T-1

8805T001
DRAWFORM REVISION 25 SEPT 96

P:\Mech\8805T001.DWG Last Update: 8/4/2000 Plotted: 8/4/2000 1:25 pm By: hammond Plot Scale: 1=1.0 Xref Dwg's:

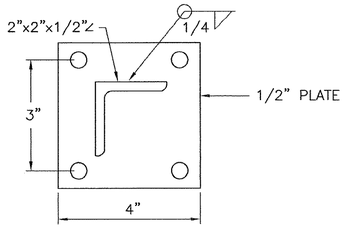

SECTION A
NOT TO SCALE

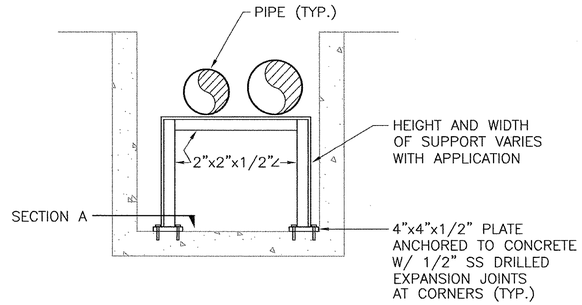

STANDARD TRENCH BOX PIPE SUPPORT (1)
NOT TO SCALE — AS REQUIRED T2

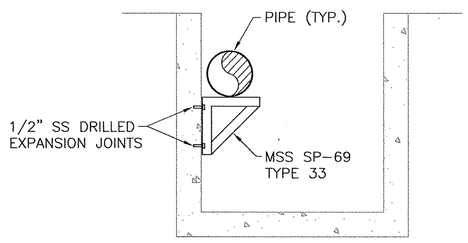

STANDARD TRENCH WALL BRACKET (2)
NOT TO SCALE — AS REQUIRED T2

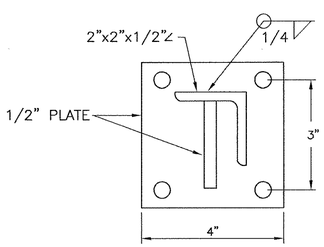

SECTION B
NOT TO SCALE

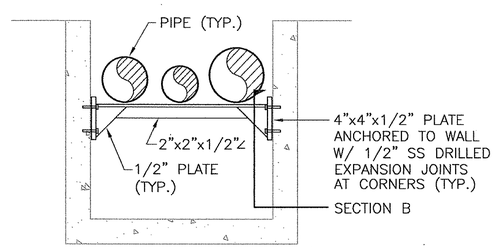

STANDARD TRENCH TRAPEZE SUPPORT (3)
NOT TO SCALE — AS REQUIRED T2

LEGEND

EXISTING	DESCRIPTION	NEW
NONE	TPFM	
	PIPING BELOWGRADE	
	SPFM	
	SUMP PUMP	
	VALVE	
	REDUCER	
	PUMP CONNECTION	
	MANHOLE	
	DROP INLET	
2A	SOIL BORING	
	UNDERGROUND UTILITY	
	AREA OF CONCRETE REMOVAL AND REPAIR	
NONE	OW/WO	

LEGEND REVISION:
SHEET C10-C12 DARK SHADE DENOTES NEW WORK

ABBREVIATIONS

BLDG	BUILDING
BM	BENCH MARK
BOTT	BOTTOM
DFM	DIESEL FUEL MARINE
DIA	DIAMETER
EL	ELEVATION
GAL	GALLON
LT	LEFT
MJ	MECHANICAL JOINT
OW/WO	OILY WASTE/WASTE OIL
RT	RIGHT
SP	SUMP PUMP
SPFM	SUMP PUMP FORCE MAIN
STA	STATION
TPFM	TRANSFER PUMP FORCE MAIN
TYP	TYPICAL
VERT	VERTICAL

PUMP SCHEDULE

MARK	TPS-1	TPS-1
GPM	500	300
HEAD (FT)	58	27
HORSEPOWER	15	5
RPM	1750	1750
MOTOR	208V/3PH/60HZ	208V/3PH/60HZ

PUMP SEQUENCE OF OPERATION

EACH PUMP STATION SHALL OPERATE IN RESPONSE TO LOCAL FLOAT SWITCH CONTROL SYSTEM AS SPECIFIED. IN ADDITION, SIGNAL FROM BOWTS LOAD EQUALIZATION TANK HIGH LEVEL FLOAT SWITCH OR MANUAL EMERGENCY STOP PUSHBUTTON SWITCH SHALL SHUT DOWN PUMP STATIONS.

REVISIONS

DATE	DESCRIPTION	STAL
8/16/00	LEGEND REVISION	

APPROVED

DESIGN DIRECTOR: STAL
DESIGN MANAGER: DATE
PROJECT MANAGER: PMP
PROJECT ENGINEER: ARCH/ ENGR.
DESIGN: CJH
DRAWN: CJH
REVIEW: JJH
QC: PMP

GEE & JENSON
Engineers • Architects • Planners, Inc.
Orlando, Tampa, Jacksonville, Fort Myers, Florida
Florida 32803 — EB 0000264 — A/E 00C0000
A/E CONTRACT NO. 89-D-5021
APPROVED: DATE
ACTIVITY – SATISFACTORY TO: DATE 19 AUG 00
APPROVED: (Tel)
TO: JOB COORDINATOR NAVFAC

NAVAL FACILITIES ENGINEERING COMMAND
DEPARTMENT OF THE NAVY — ATLANTIC DIVISION — NORFOLK, VIRGINIA
NAVAL STATION
U.S. NAVAL STATION GUANTANAMO BAY, CUBA
OILY WASTE/WASTE OIL COLLECTION
PIER A AND WHARVES B, T, AND U
LEGEND, ABBREVIATIONS, AND SCHEDULES

CODE ID. NO. 80091 — SIZE D
SCALE: AS NOTED
EFD NO.
STA. PROJ. NO.
SPEC. NO. 05-00-4505
CONSTR. CONTR. NO. N62470-00-C-4505
NAVFAC DRAWING NO. 4407593
SHEET — OF
T-2

8805T002
DRAWFORM REVISION 25 SEPT 96

P:\Mech\8805T002.DWG Last Update: 8/4/2000 Plotted: 8/14/2000 1:26 pm By: Hammond Plot Scale: 1=10.0 Xref Dwg's:

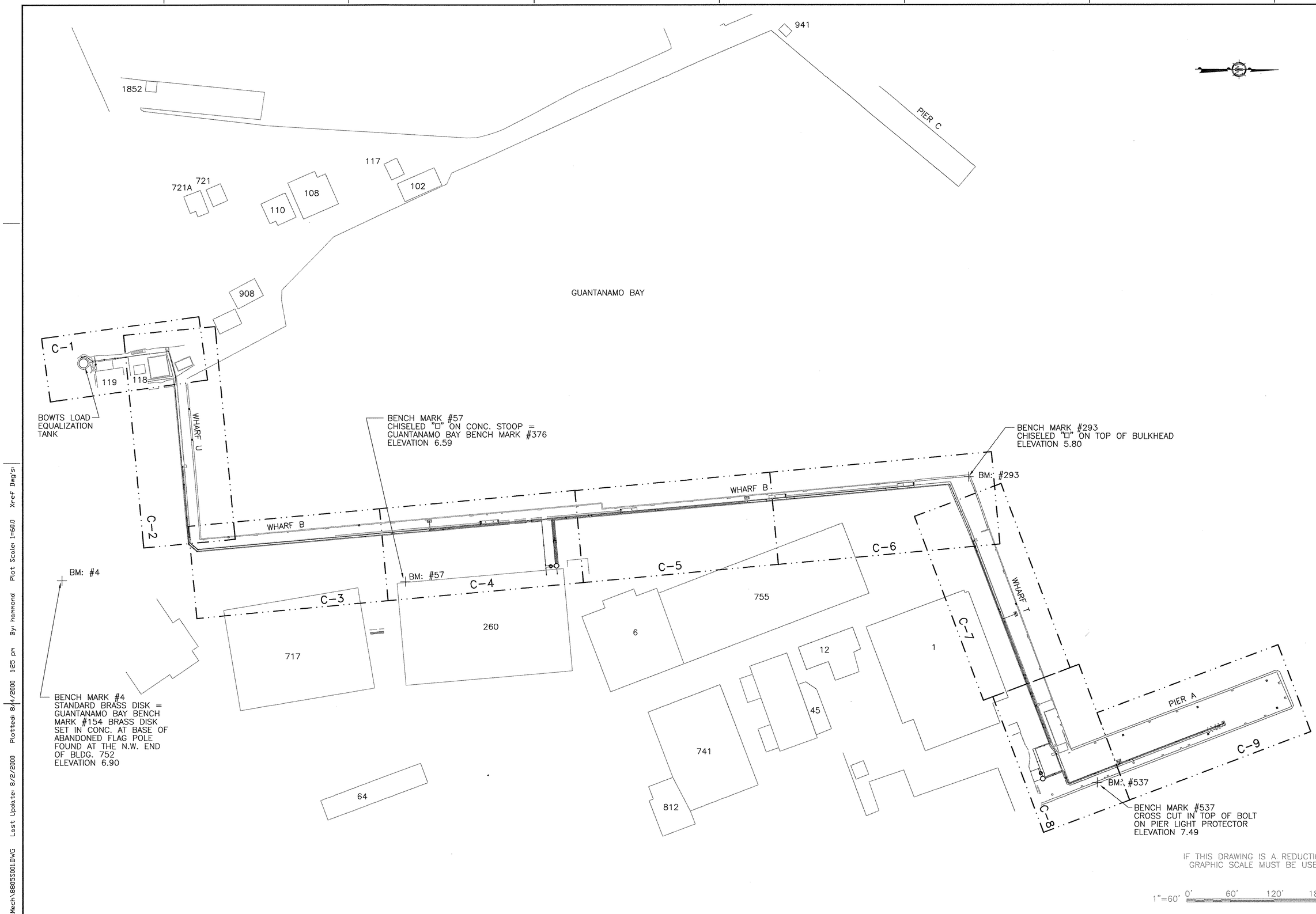

REVISIONS			
SYM.	DESCRIPTION	DATE	APPROVED

A/E CH DESIGN
CH DRAWN
JH REVIEW
QC
CHIEF ARCH./ ENGR.
PROJECT MANAGER
FIRE PROTECTION
BRANCH MANAGER
DESIGN DIRECTOR

GEE & JENSON
Engineers • Architects • Planners, Inc.
Southern Division: Charleston, SC
FLORIDA 32605 - TB 0003934 - AA C000886

A/E CONTRACT NO. 92-E-2091
APPROVED
ACTIVITY - SATISFACTORY TO
APPROVED
FOR EFD FOR COMMANDER NAVFAC
DATE 18 AUG 00

SEAL

DEPARTMENT OF THE NAVY
NAVAL STATION
NAVAL FACILITIES ENGINEERING COMMAND
ATLANTIC DIVISION
NORFOLK, VIRGINIA

U.S. NAVAL STATION
GUANTANAMO BAY, CUBA
OILY WASTE/WASTE OIL COLLECTION
PIER A AND WHARVES B, T, AND U
SITE PLAN

CODE ID. NO. 80091	SIZE D
SCALE:	
EFD NO.	
STA. PROJ. NO.	
SPEC. NO. 05-00-4505	
CONSTR. CONTR. NO. N62470-00-C-4505	
NAVFAC DRAWING NO. 4407594	
SHEET S-1	OF

88055001

DRAWFORM REVISION 25 SEPT. 96

REVDATE

P:\Mech\88055001.DWG Last Update: 8/2/2000 Plotted: 8/4/2000 1:25 pm By: hammond Plot Scale: 1=60.0 Xref Dwg's:

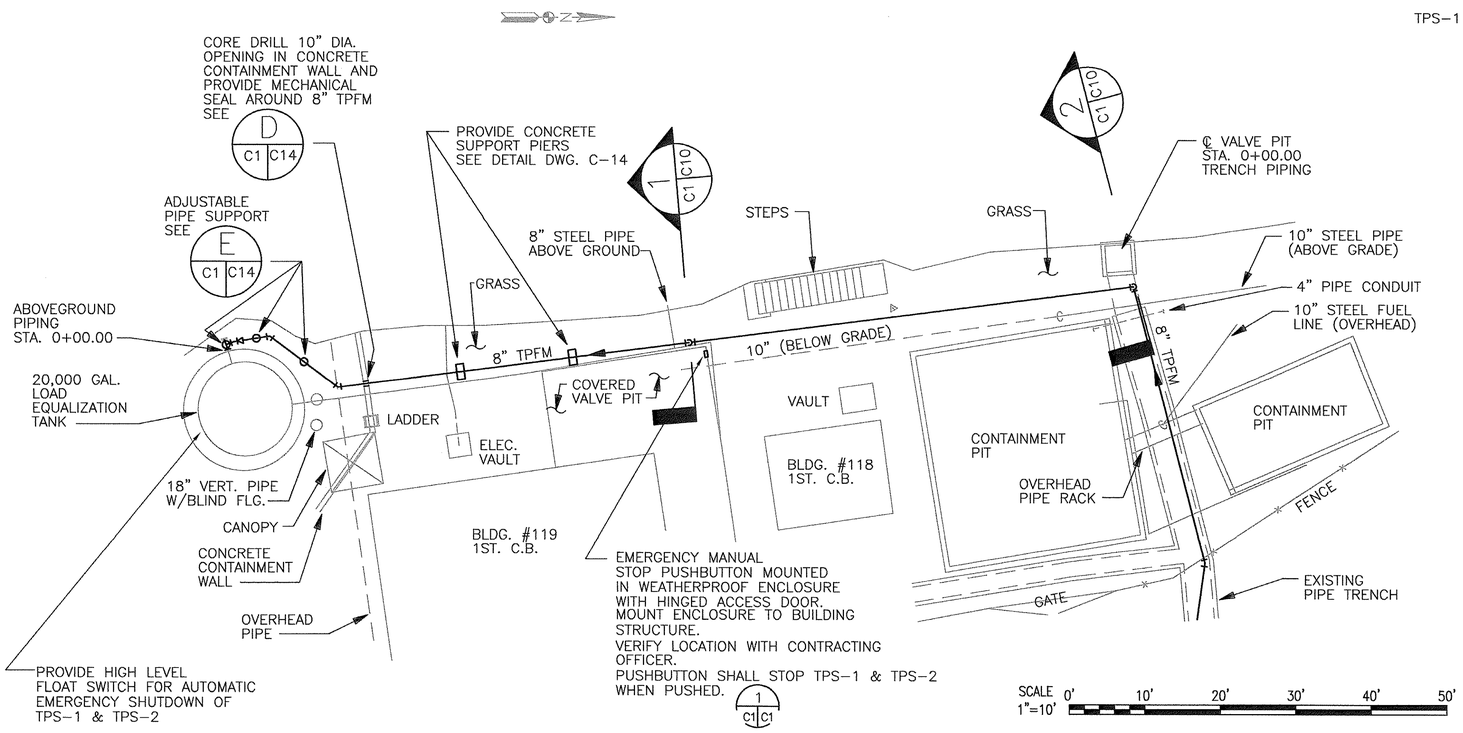

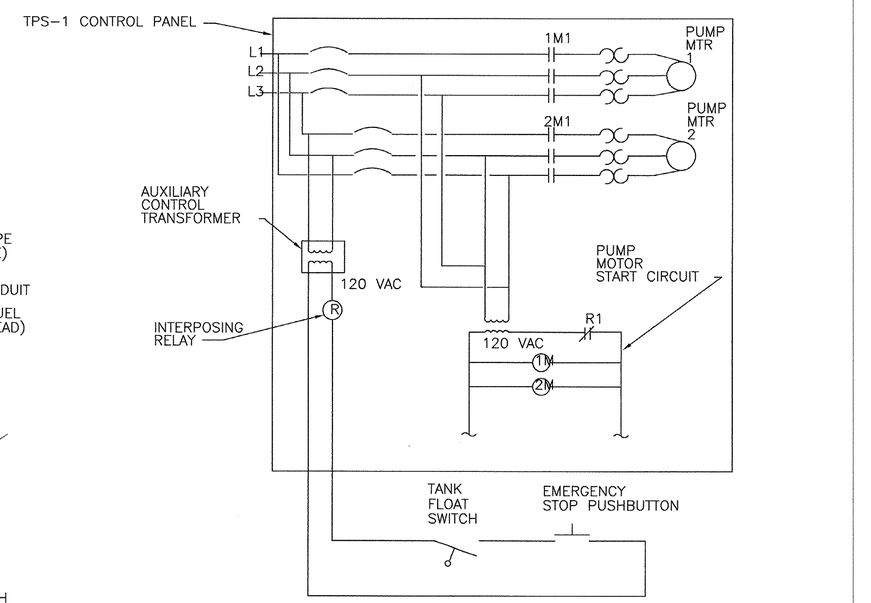

THIS SCHEMATIC IS NOT TO BE USED AS A POIINT TO POINT WIRING DIAGRAM. CONTRACTOR SHALL PROVIDE COMPLETE WIRING DIAGRAM TO SHOW ALL WIRING AND EQUIPMENT NECESSARY TO ACCOMPLISH SEQUENCE AS DESCRIBED ELSEWHERE IN DOCUMENTS.

1 C1 C1 TRANSFER PUMP EMERGENCY STOP CONTROL SCHEMATIC

NO SCALE

STA. 0+00.00
ABOVEGROUND PIPING
REMOVE EXISTING 3" – 90° BEND, 3" NIPPLE AND REDUCING FLANGE.
PROVIDE:
1 – 4" TEE
1 – 4" BLIND FLANGE
1 – 4" 11 1/4° BEND
1 – 4"X8" INCREASER

STA. 0+05.91
PROVIDE:
1 – 8" 45° BEND

STA. 0+17.10
PROVIDE:
1 – 8" 45° BEND

STA. 0+64.00
PROVIDE:
2 – 8" 90° BENDS
1 – 1" GATE VALVE (AIR RELEASE)

STA. 1+23.15 ABOVEGROUND PIPING=
STA. 0+04.00, 0.80' LT. TRENCH PIPING
PROVIDE:
2 – 8" 90° BENDS
1 – CORE DRILL 14" DIA. OPENING IN TOP OF TUNNEL
1 – MECHANICAL SEAL

BENCH MARK #4
STANDARD BRASS DISK =
GUANTANAMO BAY BENCH MARK #154
BRASS DISK SET IN CONC. AT BASE OF ABANDONED FLAG POLE FOUND AT THE N.W. END OF BLDG. 752
ELEVATION 6.90
FOR LOCATION OF BENCH MARK #4 SEE SHEET T-2

NOTE:

STATIONING IS MEASURED ALONG CENTERLINE OF ABOVEGROUND PIPE.

IF THIS DRAWING IS A REDUCTION, GRAPHIC SCALE MUST BE USED.

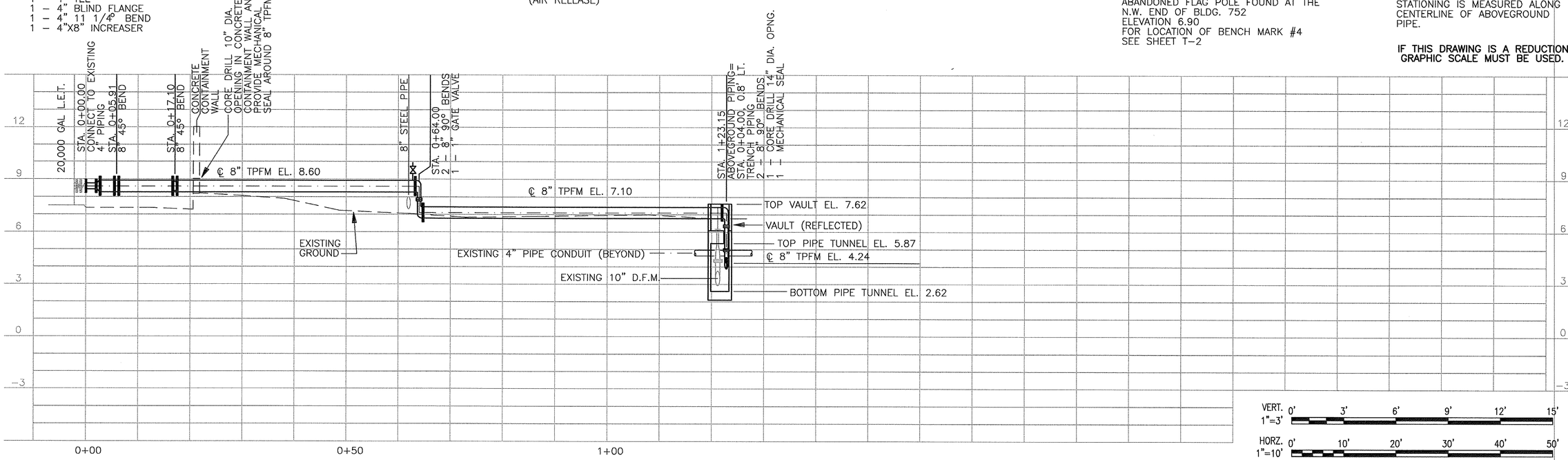

REVISIONS			
SYM.	DESCRIPTION	DATE	APPROVED

A/E CONTRACT NO. 62470-00-C-4505

GEE & JENSON Engineers-Architects-Planners, Inc.
Tampa, Orlando, Ft. Myers, Ft. Pierce, Jacksonville, Tallahassee
FL Corp. 5300 – EB 9400394 – AA 0000666

DESIGN: C.H. DRAWN: C.H. REVIEW: J.H.
CC CHIEF ARCH./ ENGR.
PROJECT MANAGER
FIRE PROTECTION
BRANCH MANAGER
DESIGN DIRECTOR

APPROVED: ACTIVITY – SATISFACTORY TO DATE
APPROVED: CDR, LAT, THE COMMANDER NAVFAC DATE

DEPARTMENT OF THE NAVY
NAVAL FACILITIES ENGINEERING COMMAND
ATLANTIC DIVISION
NORFOLK, VIRGINIA
NAVAL STATION
U.S. NAVAL STATION
GUANTANAMO BAY, CUBA
OILY WASTE/WASTE OIL COLLECTION
PIER A AND WHARVES B, T, AND U
123.15' OF OW/WO ABOVEGROUND PIPING

CODE ID. NO. 80091	SIZE D
SCALE: AS NOTED	
EFD NO.	
STA. PROJ. NO.	
SPEC. NO. 05-00-4505	
CONSTR. CONTR. NO. N62470-00-C-4505	
NAVFAC DRAWING NO. 4407595	
SHEET C-1	OF

8805C001
DRAWFORM REVISION 25 SEPT 96

P:\Mech\8805C001.DWG Last Update: 8/4/2000 Plotted: 8/4/2000 1:24 pm By: hammond Plot Scale: 1=10.0 Xref Dwg's:

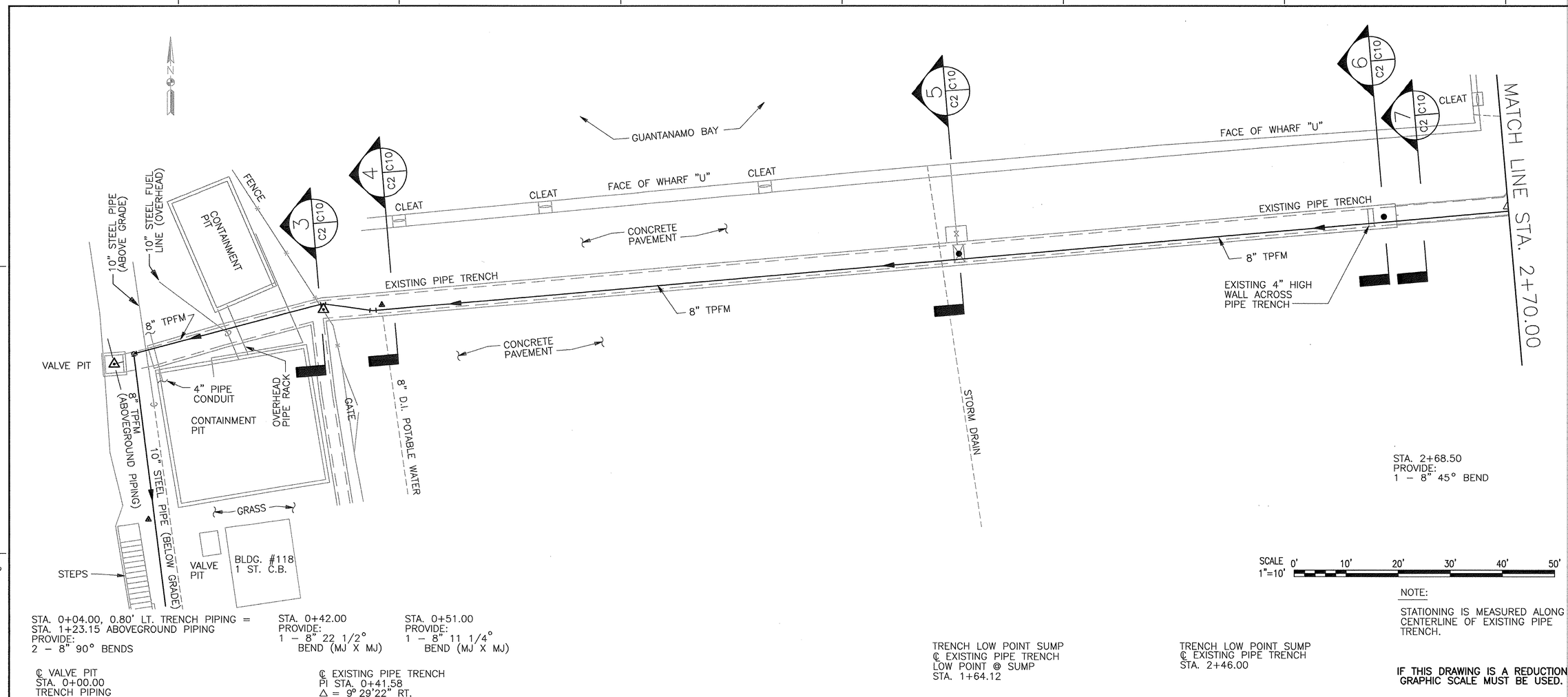

REVISIONS			
STM.	DESCRIPTION	DATE	APPROVED

A/E CONTRACT NO. 92-C-0043 – TO 0020 – A/E CODE 0006

GEE & JENSON Engineers • Architects • Planners, Inc.

ACTIVITY – SATISFACTORY TO

APPROVED

FOR EFD FOR COMMANDER NAVFAC

DEPARTMENT OF THE NAVY — NAVAL FACILITIES ENGINEERING COMMAND — NORFOLK, VIRGINIA

NAVAL STATION — ATLANTIC DIVISION

U.S. NAVAL STATION GUANTANAMO BAY, CUBA

OILY WASTE/WASTE OIL COLLECTION PIER A AND WHARVES B, T, AND U

STA. 0+04.00 TO STA. 2+70.00

CODE ID. NO. 80091	SIZE D
SCALE: AS NOTED	
EFD NO.	
STA. PROJ. NO.	
SPEC. NO. 05-00-4505	
CONSTR. CONTR. NO. N62470-00-C-4505	
NAVFAC DRAWING NO. 4407596	
SHEET C-2	OF

8805C002

DRAWFORM REVISION 25 SEPT 96

P:\Mech\8805C002.DVG Last Update: 8/2/2000 Plotted: 8/4/2000 1:24 pm By: hammond Plot Scale: 1=10.0 Xref Dwg's:

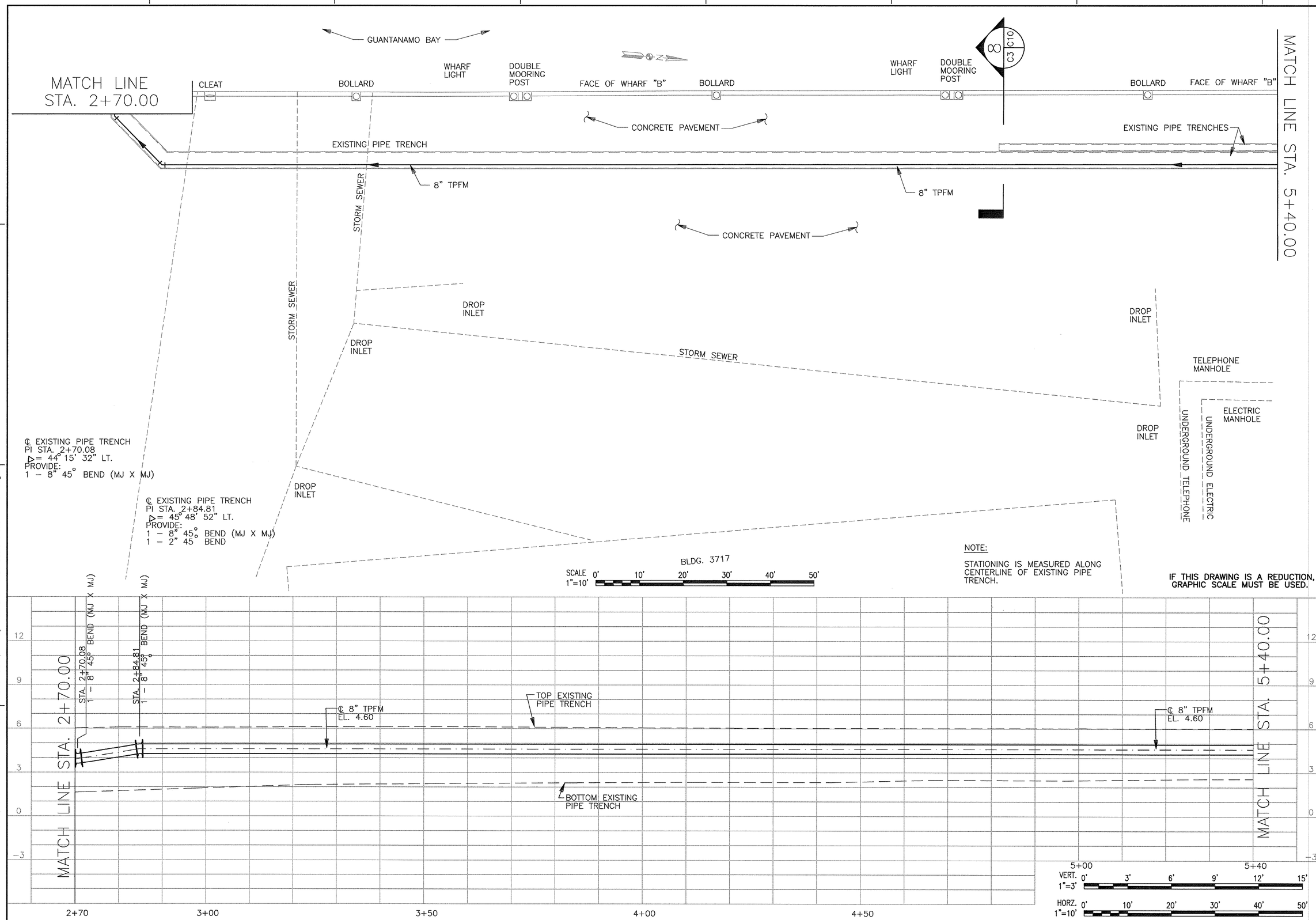

REVISIONS			
STM.	DESCRIPTION	DATE	APPROVED

A/E C.H. DESIGN C.H. DRAWN J.H. REVIEW
Cpt3 CHIEF ARCH./ ENGR.
QC
PROJECT MANAGER
FIRE PROTECTION
BRANCH MANAGER
DESIGN DIRECTOR

GEE & JENSON
Engineers • Architects • Planners, Inc.
Florida 3300 — GB 000254 — A.E. 000066
A/E CONTRACT NO. 281-D-5281
APPROVED DATE
ACTIVITY – SATISFACTORY TO
APPROVED DATE
USE SPD FOR COMMAND NAVFAC

SEAL

DEPARTMENT OF THE NAVY
NAVAL FACILITIES ENGINEERING COMMAND
NORFOLK, VIRGINIA
NAVAL STATION
ATLANTIC DIVISION
U.S. NAVAL STATION
GUANTANAMO BAY, CUBA
OILY WASTE/WASTE OIL COLLECTION
PIER A AND WHARVES B, T, AND U
STA. 2+70.00 TO STA. 5+40.00

CODE ID. NO. 80091	SIZE D
SCALE: AS NOTED	
EFD NO.	
STA. PROJ. NO.	
SPEC. NO. 05-00-4505	
CONSTR. CONTR. NO. N62470-00-C-4505	
NAVFAC DRAWING NO. 4407597	
SHEET C-3	OF

8805C003
DRAWFORM REVISION 25 SEPT 96

P:\Mech\8805C003.DVG Last Update: 8/2/2000 Plotted: 8/4/2000 1:24 pm By: hammond Plot Scale: 1=10.0 Xref Dwg's:

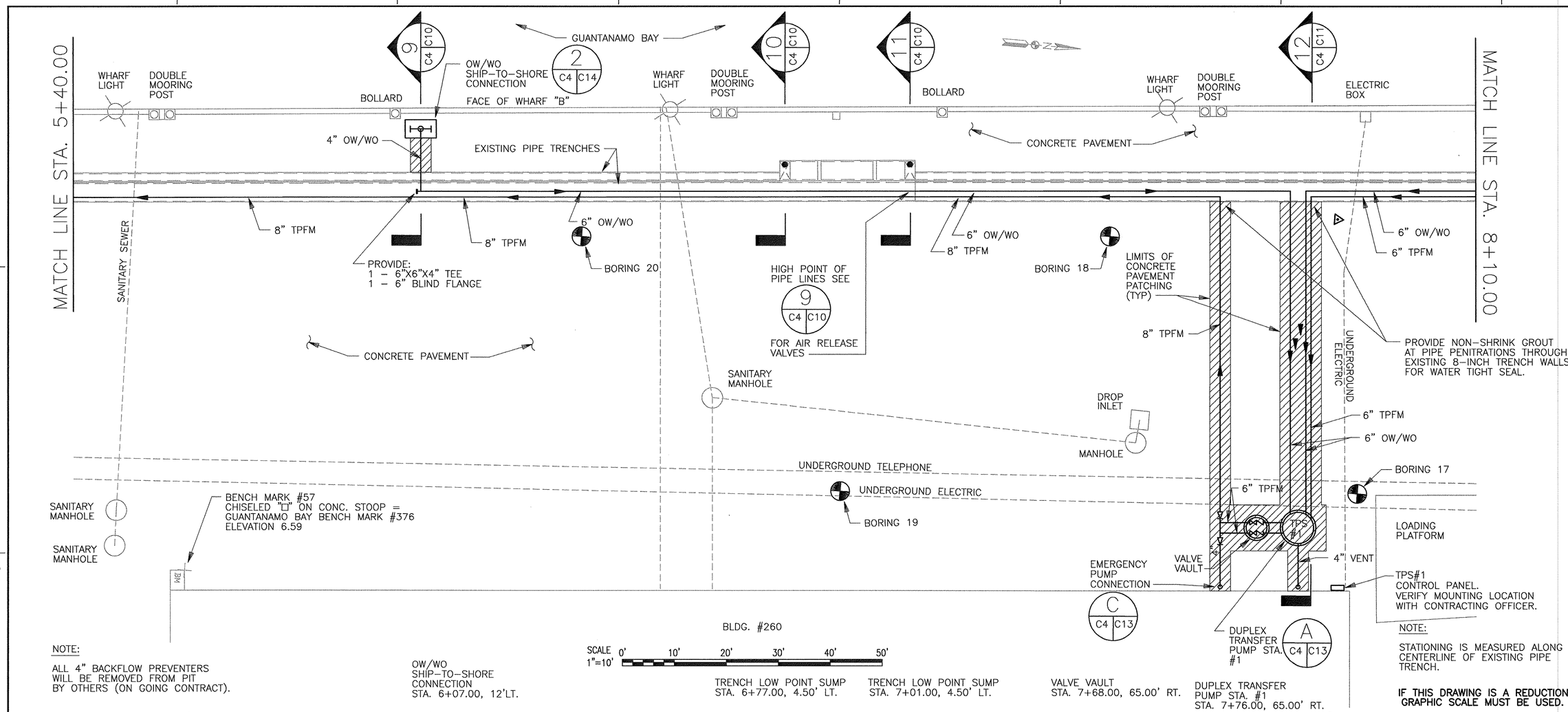

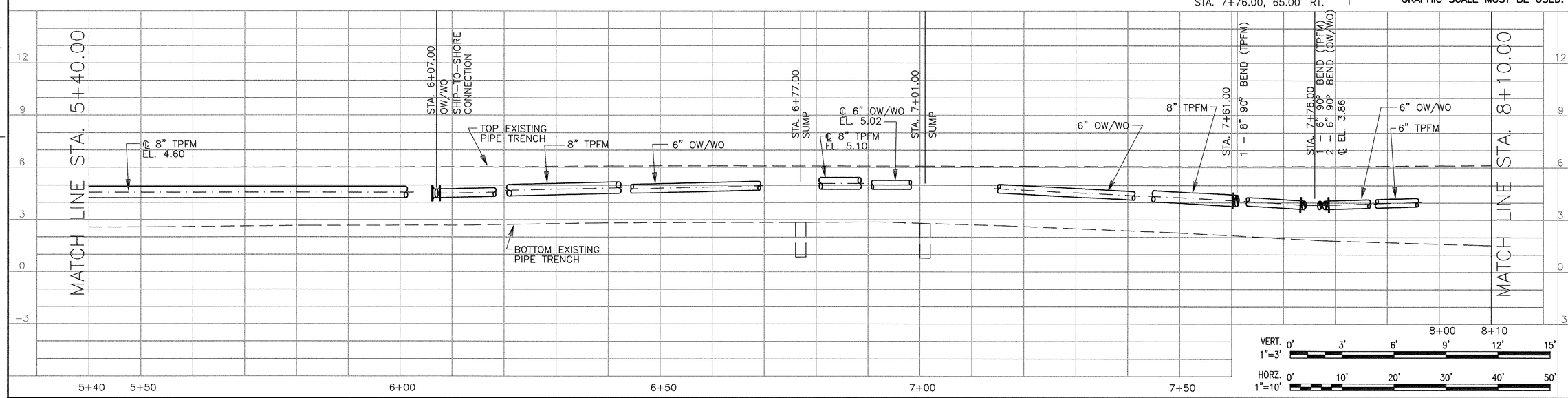

REVISIONS

SYM.	DESCRIPTION	DATE	APPROVED

A/E C.H. DESIGN; C.H. DRAWN; J.H. REVIEW; CC CHIEF; MOD/ ENGR.; PROJECT MANAGER; FIRE PROTECTION; BRANCH MANAGER; DESIGN DIRECTOR; EFD

GEE & JENSON
Engineers · Architects · Planners, Inc.
Gee & Jenson Plaza, 400 E. Mallard Drive, Suite 400, Palm Beach Gardens, FL 33410-4511
Phone: 561-626-7000 · Fax: 561-626-7070
A/E CONTRACT NO. 93-C-5091 · FIRM NO. 00008 · FIRM NO. 00006 · FIRM NO. 00006

APPROVED: DATE
ACTIVITY – SATISFACTORY TO
APPROVED: DATE
FOR EFD FOR COMMANDER NAVFAC

DEPARTMENT OF THE NAVY
NAVAL STATION
ATLANTIC DIVISION
NAVAL FACILITIES ENGINEERING COMMAND
NORFOLK, VIRGINIA

U.S. NAVAL STATION
GUANTANAMO BAY, CUBA
OILY WASTE/WASTE OIL COLLECTION
PIER A AND WHARVES B, T, AND U
STA. 5+40.00 TO STA. 8+10.00

CODE ID. NO. 80091 | SIZE D
SCALE: AS NOTED
EFD NO.
STA. PROJ. NO.
SPEC. NO. 05-00-4505
CONSTR. CONTR. NO. N62470-00-C-4505
NAVFAC DRAWING NO. 4407598
SHEET C-4 OF

8805C004
DRAWFORM REVISION 25 SEPT 96

P:\Mech\8805C004.DWG Last Update: 8/4/2000 Plotted: 8/14/2000 1:24 pm By: hammond Plot Scale: 1=10.0 Xref Dwg's:

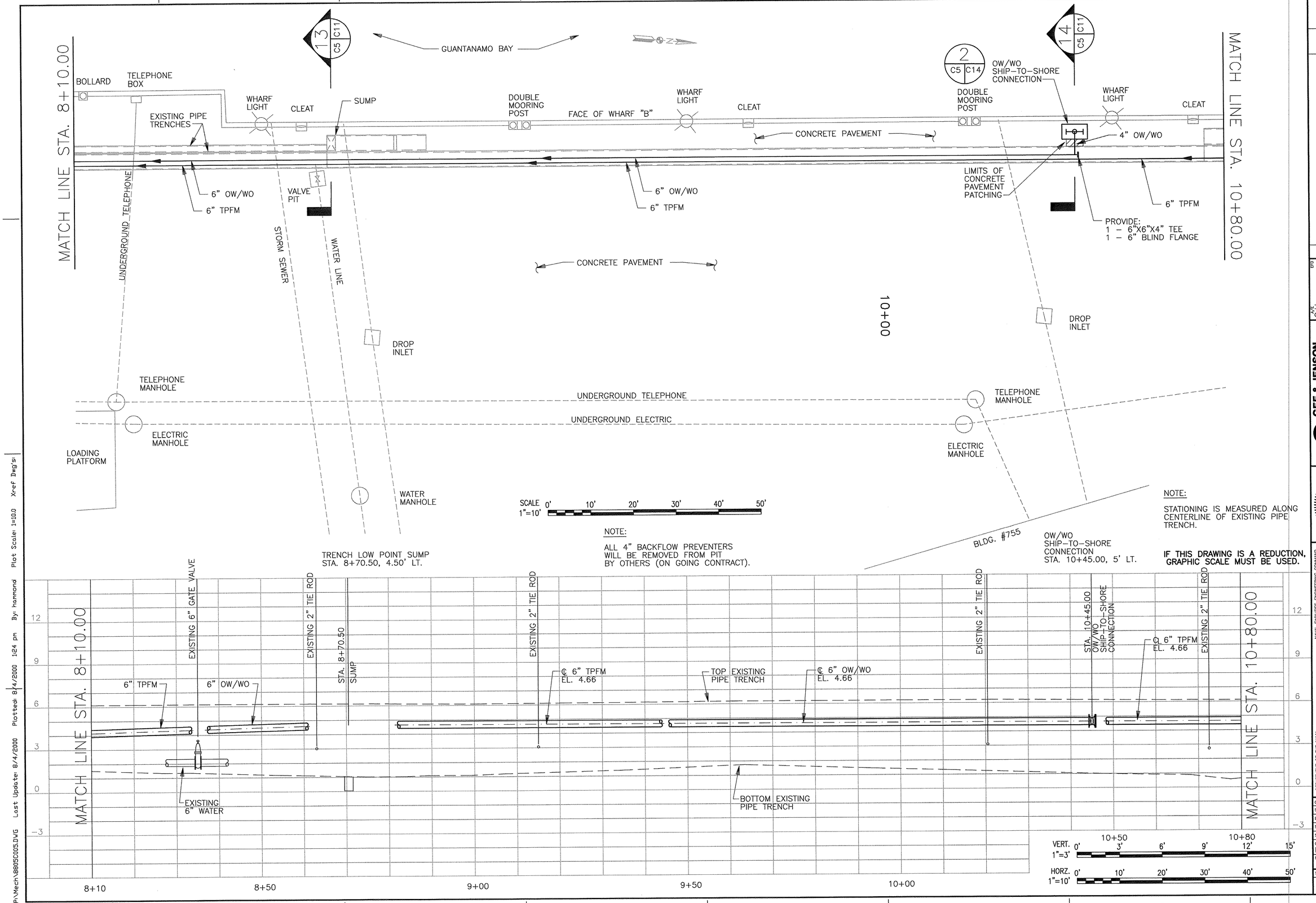

NOTE:

ALL 4" BACKFLOW PREVENTERS WILL BE REMOVED FROM PIT BY OTHERS (ON GOING CONTRACT).

NOTE:

STATIONING IS MEASURED ALONG CENTERLINE OF EXISTING PIPE TRENCH.

IF THIS DRAWING IS A REDUCTION, GRAPHIC SCALE MUST BE USED.

REVISIONS

DESCRIPTION	DATE	APPROVED

A/E C.H. DESIGN; C.H. DRAWN; J.H. REVIEW; QC; CHIEF ARCH./ ENGR.; PROJECT MANAGER; FIRE PROTECTION; BRANCH MANAGER; DESIGN DIRECTOR

GEE & JENSON
Engineers • Architects • Planners, Inc.
Florida 32809 — GS 000293 — AA 0000846

A/E CONTRACT NO. 99-D-5021 DATE
APPROVED
ACTIVITY – SATISFACTORY TO
APPROVED DATE

NAVAL FACILITIES ENGINEERING COMMAND
ATLANTIC DIVISION
NORFOLK, VIRGINIA
DEPARTMENT OF THE NAVY
NAVAL STATION
U.S. NAVAL STATION
GUANTANAMO BAY, CUBA
OILY WASTE/WASTE OIL COLLECTION
PIER A AND WHARVES B, T, AND U
STA. 8+10.00 TO STA. 10+80.00

CODE ID. NO. 80091	SIZE D
SCALE: AS NOTED	
EFD NO.	
STA. PROJ. NO.	
SPEC. NO. 05-00-4505	
CONSTR. CONTR. NO. N62470-00-C-4505	
NAVFAC DRAWING NO. 4407599	
SHEET C-5	OF

8805C005

DRAWFORM REVISION 25 SEPT 96

P:\Mech\8805C005.DWG Last Update: 8/4/2000 Plotted: 8/4/2000 1:24 pm By: hammond Plot Scale: 1=10.0 Xref Dwg's:

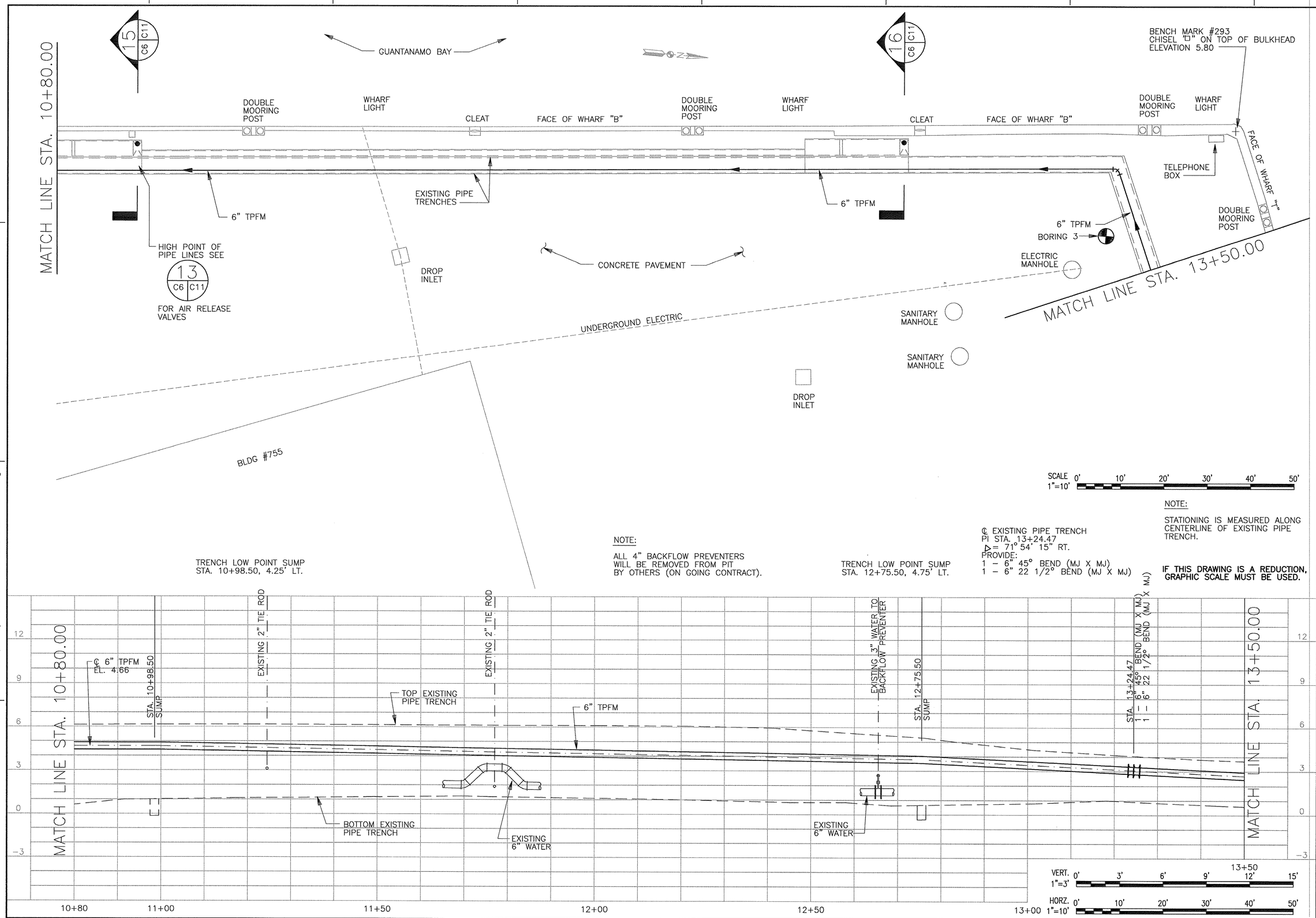

REVISIONS			
SYM.	DESCRIPTION	DATE	APPROVED

A/E DESIGN C.H. DRAWN J.H. REVIEW QC CHIEF ARCH/ ENGR. PROJECT MANAGER FIRE PROTECTION BRANCH MANAGER DESIGN DIRECTOR

GEE & JENSON
Engineers • Architects • Planners, Inc.
Norfolk, Virginia • Tampa, Florida
A/E CONTRACT NO. 39-90-C-3001 – TO 0023SA – JJ 0006ns

APPROVED DATE
ACTIVITY – SATISFACTORY TO
APPROVED DATE
FOR STD FOR COMMANDER NAVFAC

DEPARTMENT OF THE NAVY
NAVAL STATION
NAVAL FACILITIES ENGINEERING COMMAND
NORFOLK, VIRGINIA
ATLANTIC DIVISION
U.S. NAVAL STATION GUANTANAMO BAY, CUBA
OILY WASTE/WASTE OIL COLLECTION
PIER A AND WHARVES B, T, AND U
STA. 10+80.00 TO STA. 13+50.00

CODE ID. NO. 80091 SIZE D
SCALE: AS NOTED
EFD NO.
STA. PROJ. NO.
SPEC. NO. 05-00-4505
CONSTR. CONTR. NO. N62470-00-C-4505
NAVFAC DRAWING NO. 4407600
SHEET OF
C-6

8805C006

DRAWFORM REVISION 25 SEPT 96

REVDATE

P:\Mech\8805C006.DWG Last Update: 8/2/2000 Plotted: 8/4/2000 1:24 pm By: hammond Plot Scale: 1=10.0 Xref Dwg's:

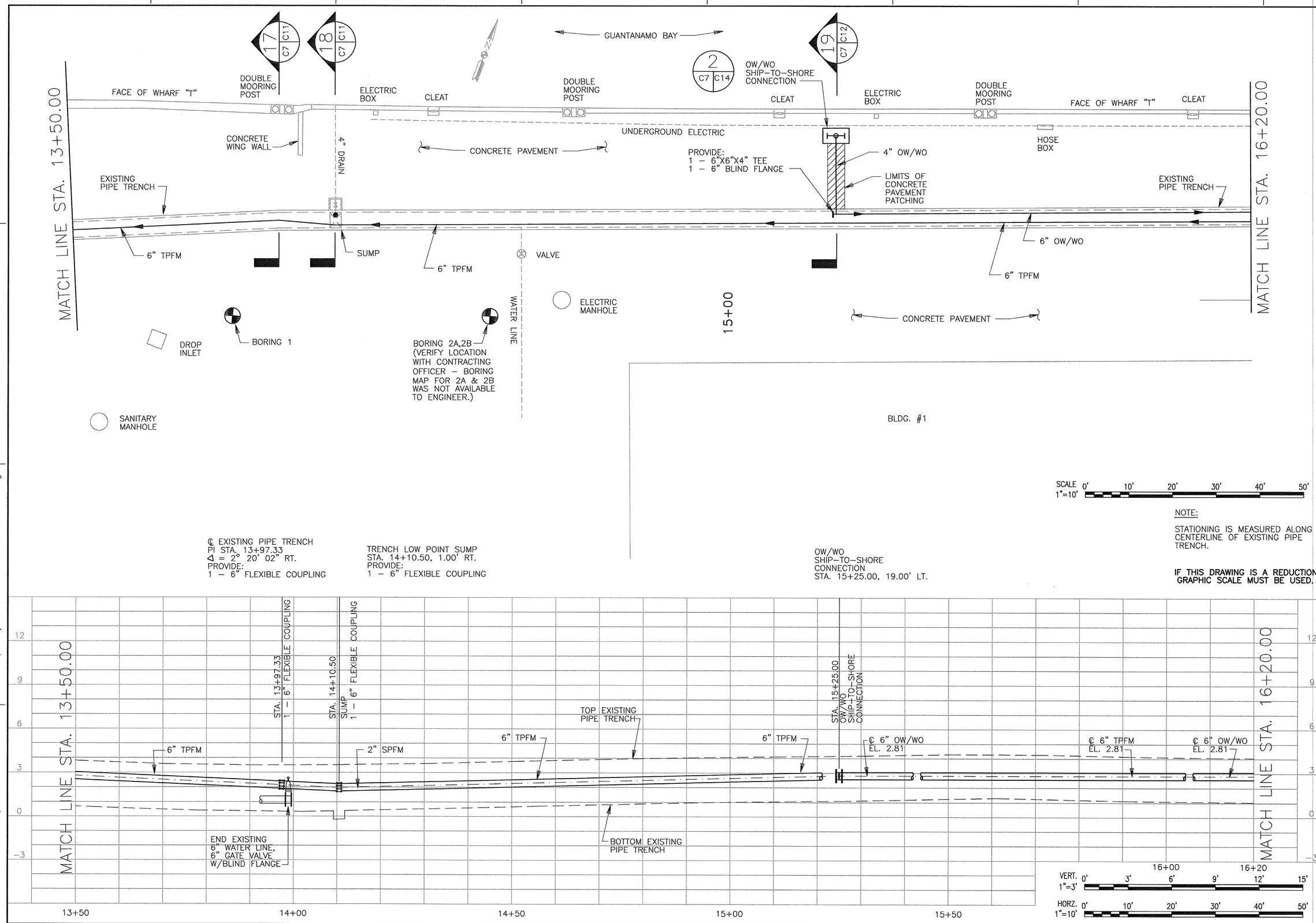

REVISIONS			
STM.	DESCRIPTION	DATE	APPROVED

A/E CH DESIGN
CH DRAWN
JH REVIEW
QC CHIEF ARCH./ ENGR.
PROJECT MANAGER
FIRE PROTECTION
BRANCH MANAGER
DESIGN DIRECTOR

GEE & JENSON
Engineers-Architects-Planners, Inc.
FLORIDA 33045 - GA 000 - TX F-2009 - PR 00-00 - LA 000566
A/E CONTRACT NO. 62742-99-D-0001

APPROVED DATE
ACTIVITY - SATISFACTORY TO DATE
APPROVED

FOR ATLANTIC CHESAPEAKE NAVFAC

SEAL

DEPARTMENT OF THE NAVY
NAVAL STATION
ATLANTIC DIVISION
NAVAL FACILITIES ENGINEERING COMMAND
NORFOLK, VIRGINIA

U.S. NAVAL STATION
GUANTANAMO BAY, CUBA
OILY WASTE/WASTE OIL COLLECTION
PIER A AND WHARVES B, T, AND U
STA. 13+50.00 TO STA. 16+20.00

CODE ID. NO. 80091	SIZE D
SCALE: AS NOTED	
EFD NO.	
STA. PROJ. NO.	
SPEC. NO. 05-00-4505	
CONSTR. CONTR. NO. N62470-00-C-4505	
NAVFAC DRAWING NO. 4407601	
SHEET C-7	OF

8805C007
DRAWFORM REVISION 25 SEPT 96

REVDATE

P:\Mech\8805C007.DWG Last Update: 8/4/2000 Plotted: 8/4/2000 1:24 pm By: hammond Plot Scale: 1=10.0 Xref Dwg's:

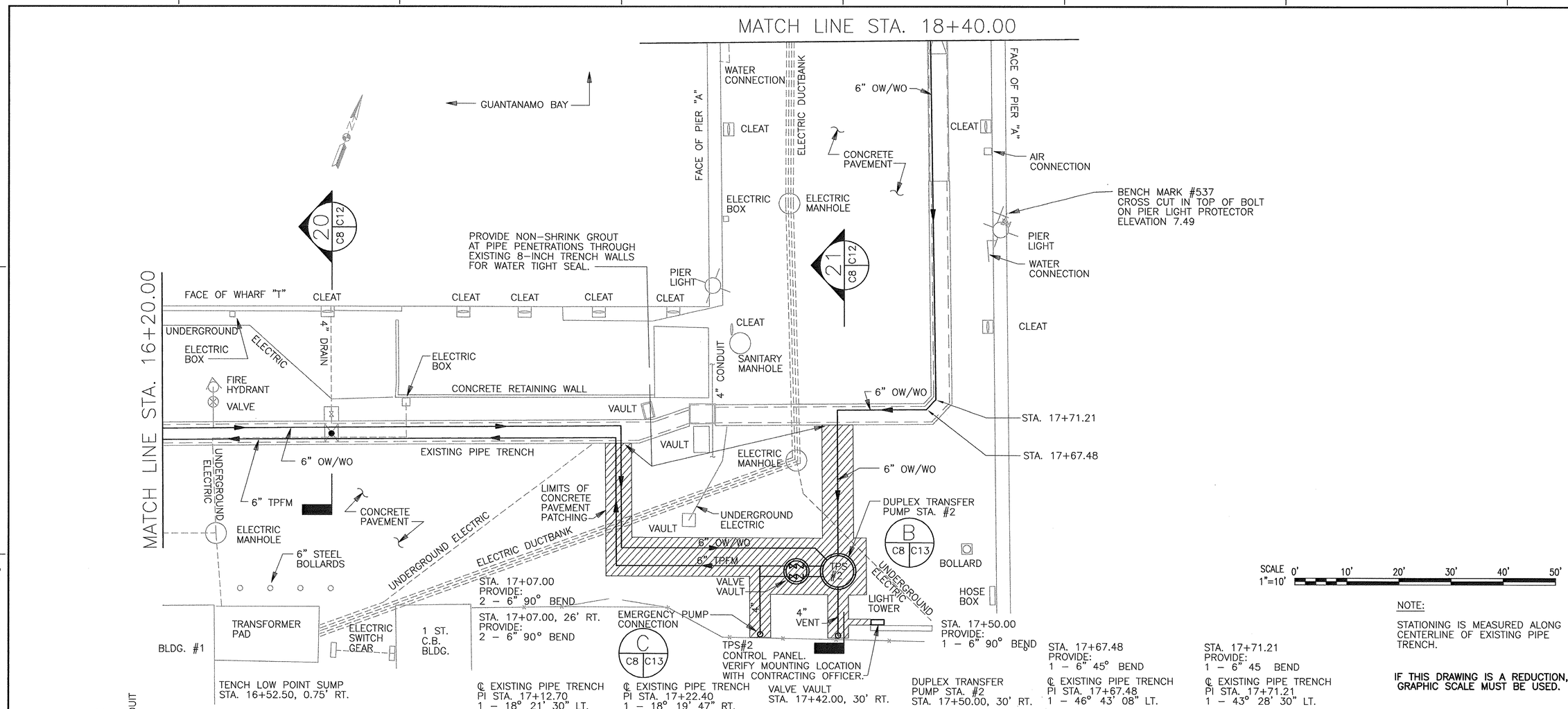

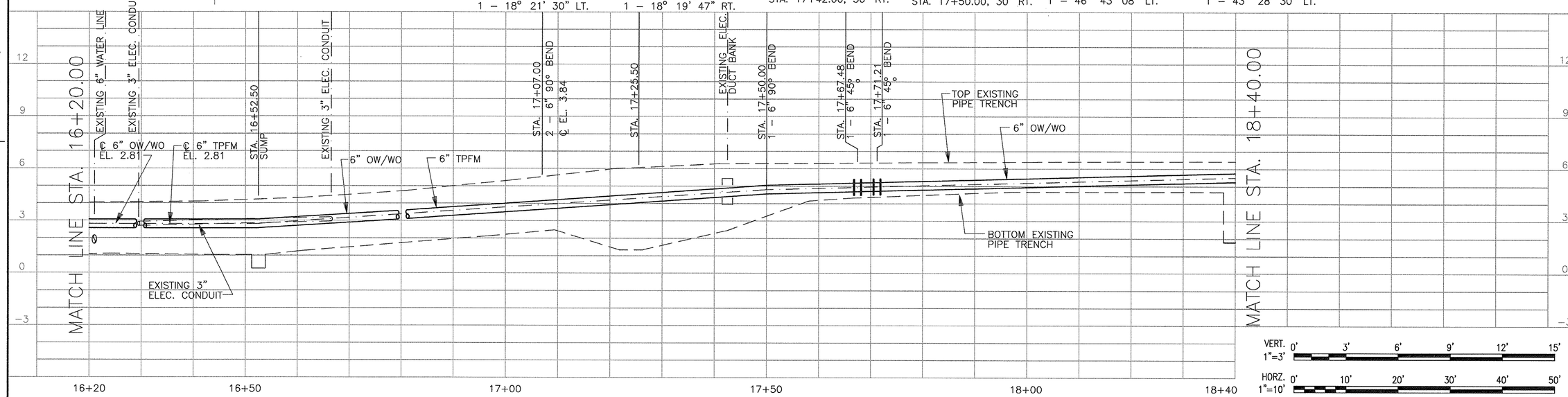

REVISIONS

SYM.	DESCRIPTION	DATE	APPROVED

A/E CONTRACT NO. 89-D-5931 — GEE & JENSON Engineers • Architects • Planners, Inc. Florida 32803 • TB 0003934 • AA 0200044

ACTIVITY – SATISFACTORY TO — DATE
APPROVED — DATE

DESIGN C.H. — DRAWN C.H. — REVIEW J.H. — QC — CHIEF ARCH./ ENGR. — PROJECT MANAGER — FIRE PROTECTION — BRANCH MANAGER — DESIGN DIRECTOR

DEPARTMENT OF THE NAVY — NAVAL FACILITIES ENGINEERING COMMAND — NORFOLK, VIRGINIA
NAVAL STATION — ATLANTIC DIVISION
U.S. NAVAL STATION — GUANTANAMO BAY, CUBA
OILY WASTE/WASTE OIL COLLECTION
PIER A AND WHARVES B, T, AND U
STA. 16+20.00 TO STA. 18+40.00

CODE ID. NO. 80091 — SIZE D
SCALE: AS NOTED
EFD NO.
STA. PROJ. NO.
SPEC. NO. 05-00-4505
CONSTR. CONTR. NO. N62470-00-C-4505
NAVFAC DRAWING NO. 4407602
SHEET — OF
C-8

8805C008

DRAWFORM REVISION 25 SEPT 98

P:\Mech\8805C008.DWG Last Update: 8/2/2000 Plotted: 8/4/2000 1:24 pm By: hammond Plot Scale: 1=10.0 Xref Dwg's: Xref: CUP COLLANDER MAPTAC

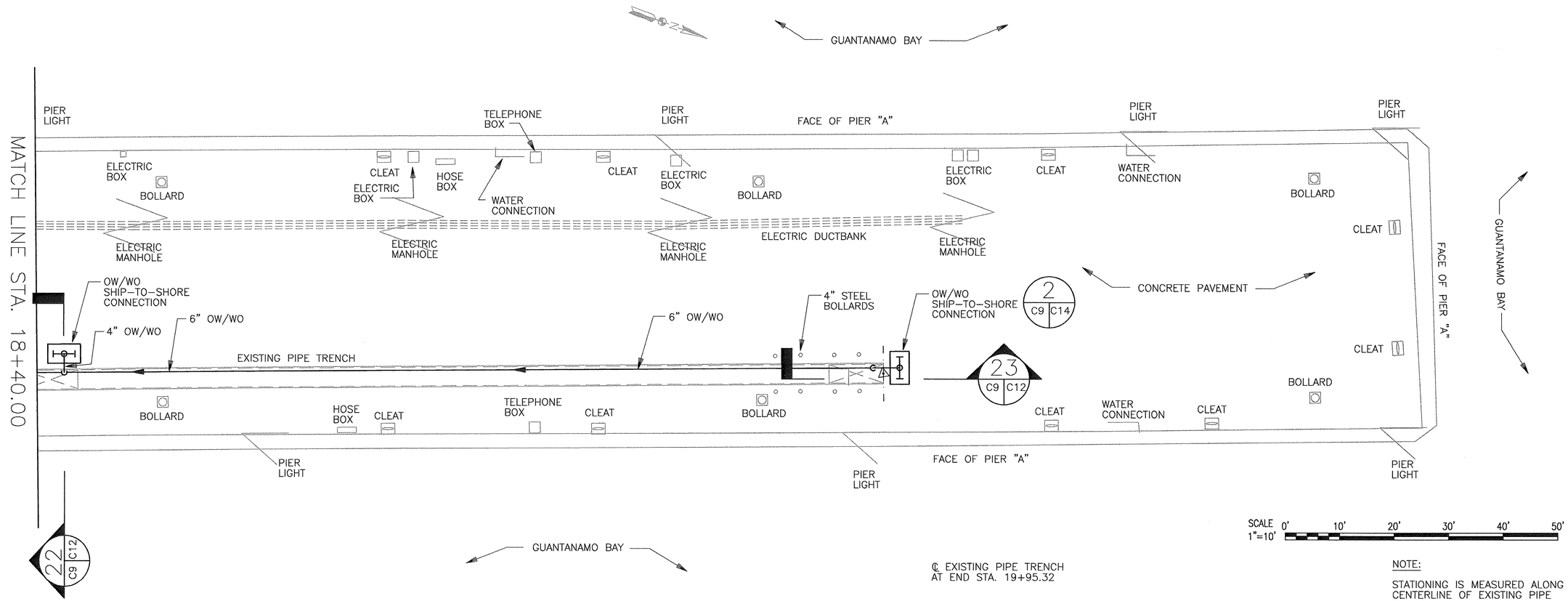

SCALE 1"=10' 0' 10' 20' 30' 40' 50'

NOTE:

STATIONING IS MEASURED ALONG CENTERLINE OF EXISTING PIPE TRENCH.

IF THIS DRAWING IS A REDUCTION, GRAPHIC SCALE MUST BE USED.

TRENCH LOW POINT SUMP
STA. 18+42.50, 0.50' LT.

OW/WO
SHIP-TO-SHORE
CONNECTION
STA. 18+45.00, 5.00' LT.

℄ EXISTING PIPE TRENCH
AT END STA. 19+95.32

TRENCH LOW POINT SUMP
STA. 19+91.50, 0.50' LT.

OW/WO
SHIP-TO-SHORE
CONNECTION
STA. 19+98.57, 1.20' LT.

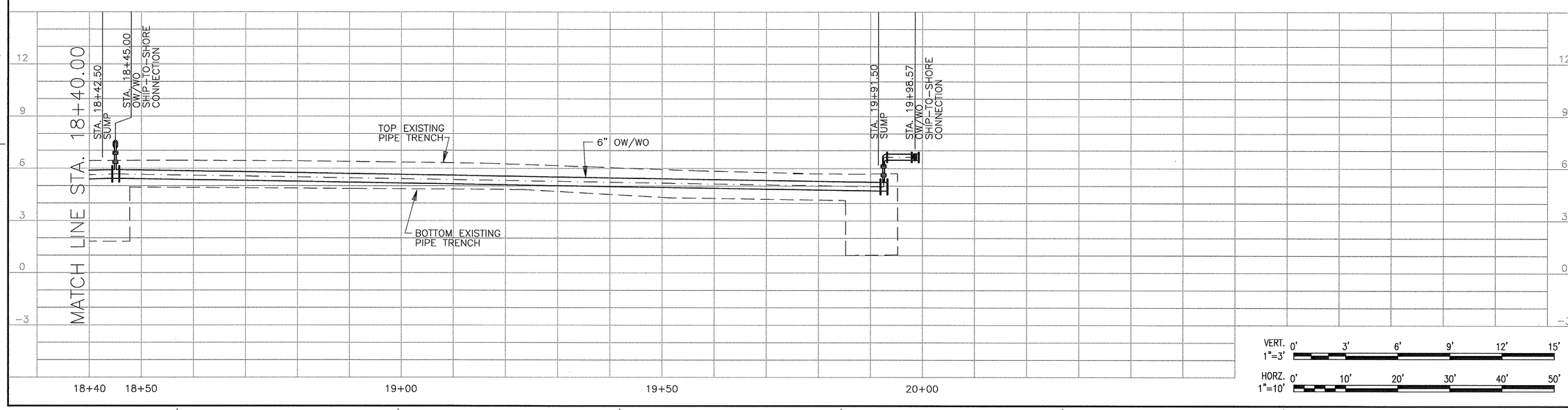

VERT. 1"=3' 0' 3' 6' 9' 12' 15'

HORZ. 1"=10' 0' 10' 20' 30' 40' 50'

REVISIONS

REV	DESCRIPTION	DATE	APPROVED

A/E CONTRACT NO. 92-D-2081

GEE & JENSON Engineers-Architects-Planners, Inc.
Florida 32455 • VA 22046 • VA 000666

ACTIVITY – SATISFACTORY TO
APPROVED DATE
FOR RFP FOR COMMANDER NAVFAC
APPROVED DATE

DESIGN CH
DRAWN CH
REVIEW HC
CHIEF ARCH/ ENGR. DD
PROJECT MANAGER
FIRE PROTECTION
BRANCH MANAGER
DESIGN DIRECTOR

DEPARTMENT OF THE NAVY
NAVAL STATION
NAVAL FACILITIES ENGINEERING COMMAND
ATLANTIC DIVISION
NORFOLK, VIRGINIA

U.S. NAVAL STATION
GUANTANAMO BAY, CUBA
OILY WASTE/WASTE OIL COLLECTION
PIER A AND WHARVES B, T, AND U
STA. 18+40.00 TO STA. 20.00

CODE ID. NO. 80091 SIZE D
SCALE: AS NOTED
EFD NO.
STA. PROJ. NO.
SPEC. NO. 05-00-4505
CONSTR. CONTR. NO. N62470-00-C-4505
NAVFAC DRAWING NO. 4407603
SHEET OF
C-9

8805C009
DRAWFORM REVISION 25 SEPT 96

REVDATE

P:\Mech\9805C009.DWG Last Update: 8/4/2000 Plotted: 8/4/2000 1:24 pm By: hammond Plot Scale: 1=10.0 Xref Dwg's:

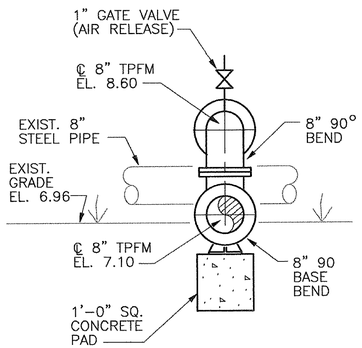

SECTION 1 (C1|C10)
SCALE: 3/4 = 1'-0"

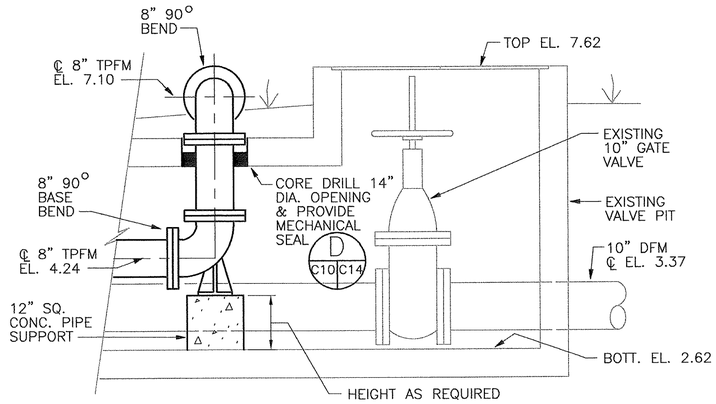

SECTION 2 (C1|C10)
SCALE: 3/4" = 1'-0"

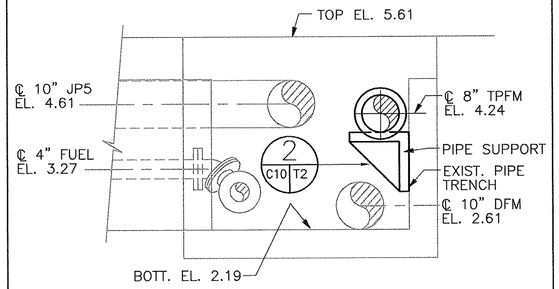

SECTION 3 (C2|C10)
SCALE: 3/4" = 1'-0"

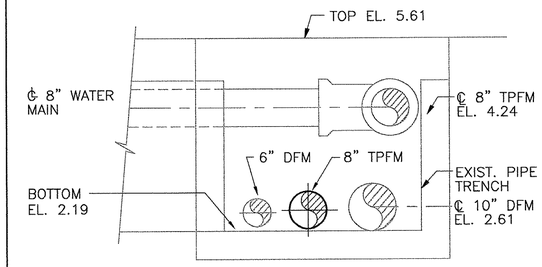

SECTION 4 (C2|C10)
SCALE: 3/4" = 1'-0"

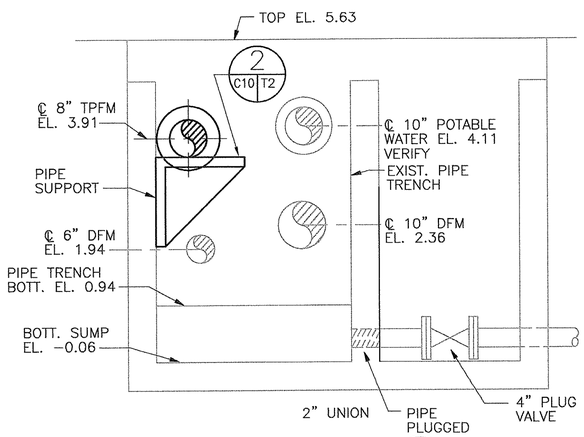

SECTION 5 (C2|C10)
SCALE: 3/4" = 1'-0"

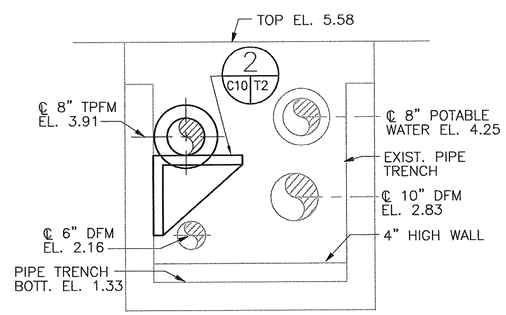

SECTION 6 (C2|C10)
SCALE: 3/4" = 1'-0"

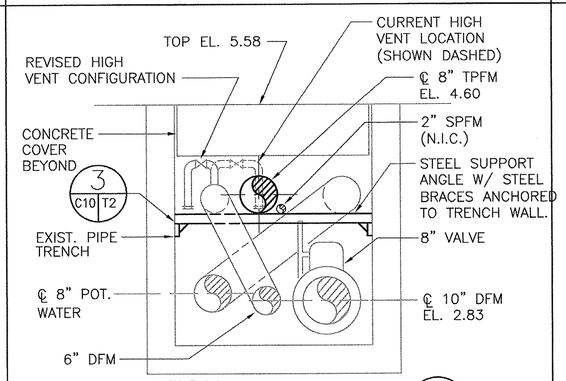

SECTION 7 (C2|C10)
SCALE: 3/4" = 1'-0"

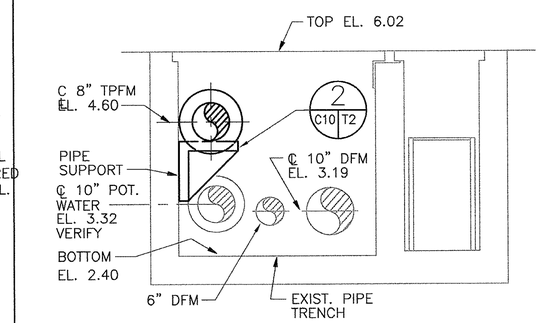

SECTION 8 (C3|C10)
SCALE: 3/4" = 1'-0"

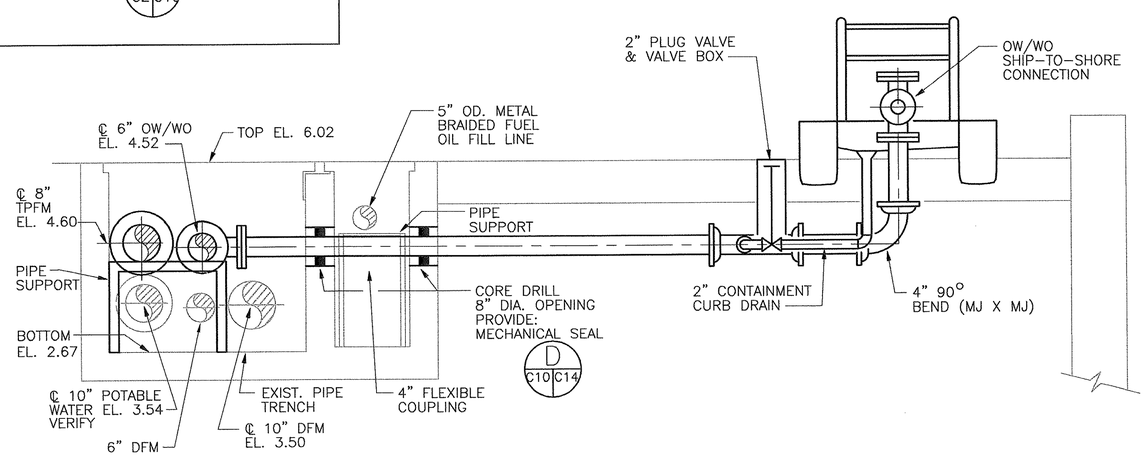

SECTION 9 (C4|C10)
SCALE: 3/4" = 1'-0"

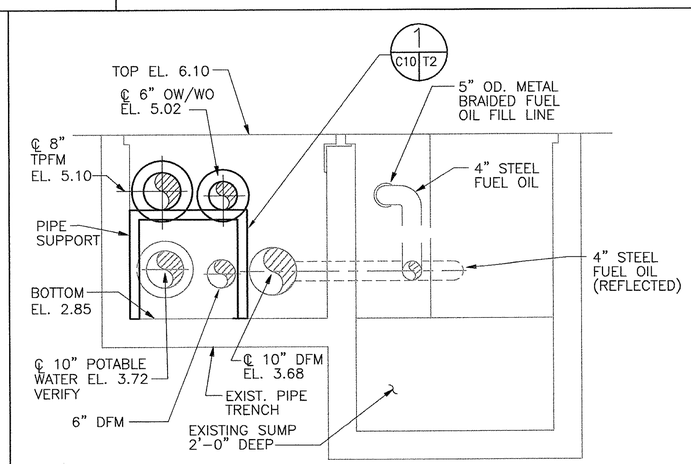

SECTION 10 (C4|C10)
SCALE: 3/4" = 1'-0"

IF THIS DRAWING IS A REDUCTION, GRAPHIC SCALE MUST BE USED

3/4"=1'-0" 4' 0 4'

REVISIONS

SYM.	DESCRIPTION	DATE	APPROVED

EFD
A/E DESIGN CHL
CHL DRAWN
JHL REVIEW
QC
CHIEF
PROJECT MANAGER
FIRE PROTECTION
BRANCH MANAGER
DESIGN DIRECTOR

GEE & JENSON
Engineers • Architects • Planners, Inc.
900 Jackson Street, Suite 780, Dallas, Texas 75202
Phone: (214) 742-3476 Fax: (214) 748-1696

A/E CONTRACT NO. 69-D-5931
APPROVED DATE
ACTIVITY - SATISFACTORY TO DATE
APPROVED
FOR: BTA POW COMMANDER MARINE

SEAL

DEPARTMENT OF THE NAVY
NAVAL FACILITIES ENGINEERING COMMAND
NAVAL STATION ATLANTIC DIVISION
NORFOLK, VIRGINIA

U.S. NAVAL STATION GUANTANAMO BAY, CUBA
OILY WASTE/WASTE OIL COLLECTION
PIER A AND WHARVES B, T, AND U
SECTIONS

CODE ID. NO. 80091 SIZE D
SCALE: AS NOTED
EFD NO.
STA. PROJ. NO.
SPEC. NO. 05-00-4505
CONSTR. CONTR. NO. N62470-00-C-4505
NAVFAC DRAWING NO. 4407604
SHEET OF
C-10
8805C010
DRAWFORM REVISION 25 SEPT 96

REV/DATE

P:\Mech\8805C010.DWG Last Update: 8/4/2000 Plotted: 8/4/2000 1:24 pm By: hammond Plot Scale: 1=10 Xref Dwg's:

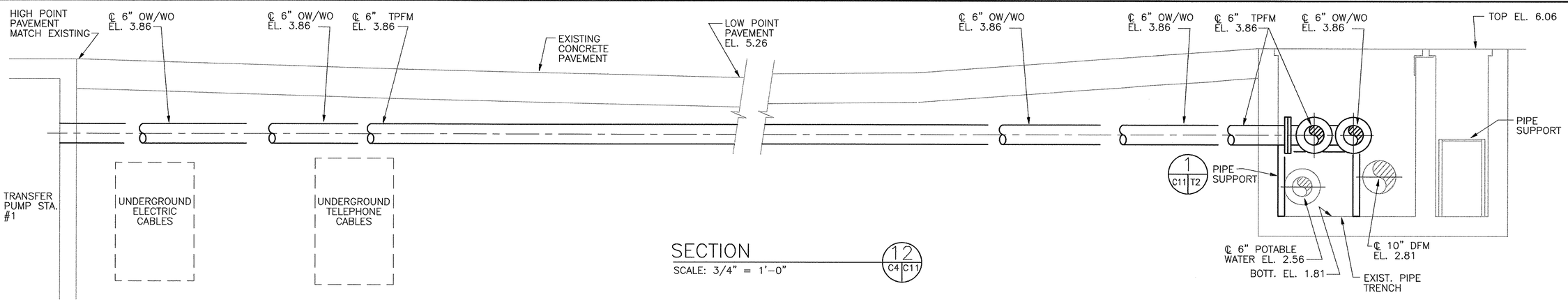

SECTION 12 (C4 C11)
SCALE: 3/4" = 1'-0"

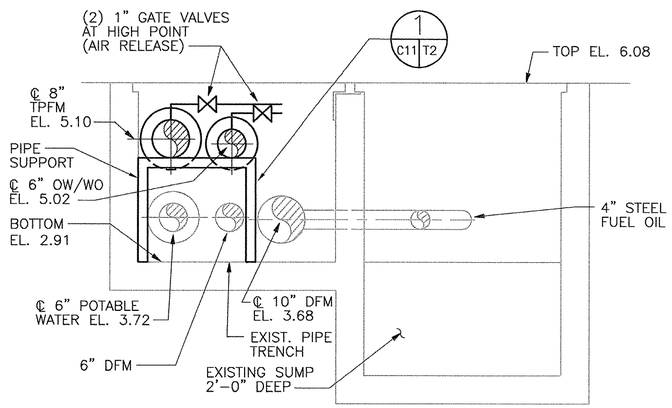

SECTION 11 (C4 C10)
SCALE: 3/4" = 1'-0"

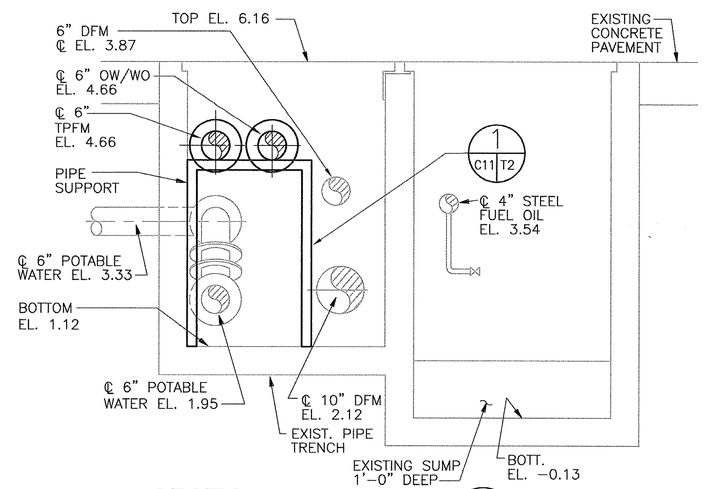

SECTION 13 (C5 C10)
SCALE: 3/4" = 1'-0"

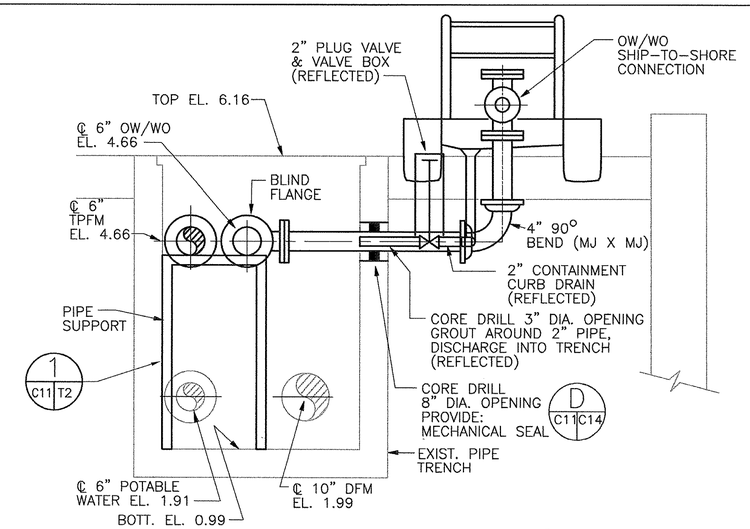

SECTION 14 (C5 C11)
SCALE: 3/4" = 1'-0"

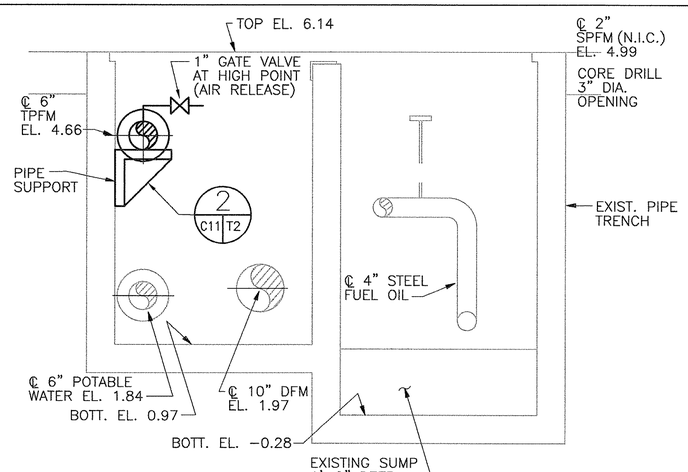

SECTION 15 (C6 C11)
SCALE: 3/4" = 1'-0"

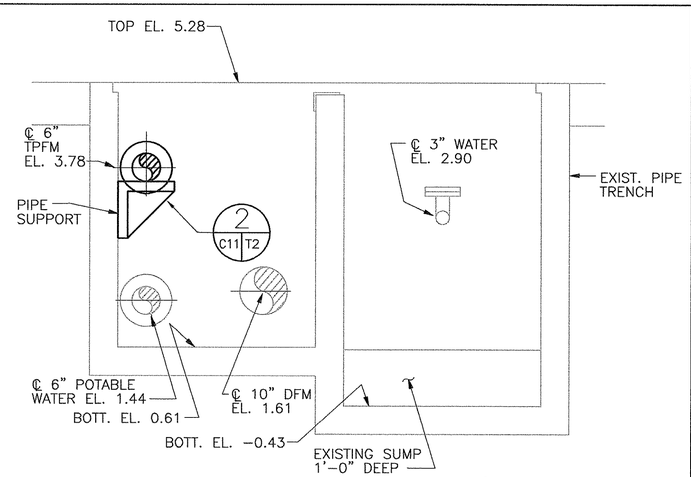

SECTION 16 (C6 C11)
SCALE: 3/4" = 1'-0"

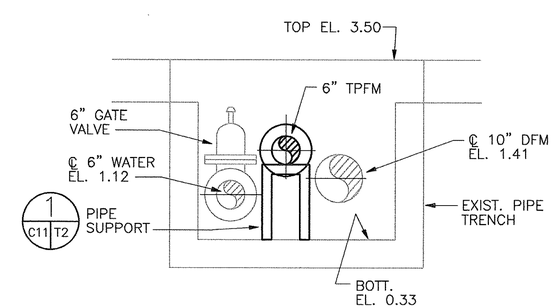

SECTION 17 (C7 C11)
SCALE: 3/4" = 1'-0"

IF THIS DRAWING IS A REDUCTION, GRAPHIC SCALE MUST BE USED

3/4"=1'-0" 4' 0 4'

REVISIONS				
STA.	DESCRIPTION	DATE	APPROVED	

A/E CONTRACT NO. 39-D-5001 — GEE & JENSON Engineers • Architects • Planners, Inc. Orlando, Florida 32801 — Florida 3005 — EB 0000254 — AA 0000644

APPROVED — ACTIVITY — SATISFACTORY TO — APPROVED — ACTIVITY — APPROVED

A/E DESIGN C.H. — DRAWN C.H. — REVIEW J.H. — QC — CHIEF ARCH./ ENGR. — PROJECT MANAGER — FIRE PROTECTION — BRANCH MANAGER — DESIGN DIRECTOR

SEAL — FOR GFD FOR COMMANDER (NAVFAC)

DEPARTMENT OF THE NAVY — NAVAL FACILITIES ENGINEERING COMMAND — ATLANTIC DIVISION — NORFOLK, VIRGINIA — NAVAL STATION — U.S. NAVAL STATION — GUANTANAMO BAY, CUBA — OILY WASTE/WASTE OIL COLLECTION — PIER A AND WHARVES B, T, AND U — SECTIONS

CODE ID. NO. 80091	SIZE D
SCALE: AS NOTED	
EFD NO.	
STA. PROJ. NO.	
SPEC. NO. 05-00-4505	
CONSTR. CONTR. NO. N62470-00-C-4505	
NAVFAC DRAWING NO. 4407605	
SHEET C-11	OF

8805C011

DRAWFORM REVISION 25 SEPT 96

P:\Mech\8805C011.DWG Last Update: 8/4/2000 Plotted: 8/4/2000 1:24 pm By: hammond Plot Scale: 1=1.0 Xref Dwg's:

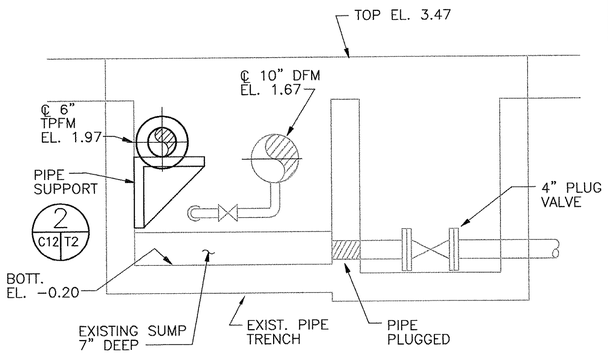

SECTION 18 (C7 | C12)
SCALE: 3/4" = 1'-0"

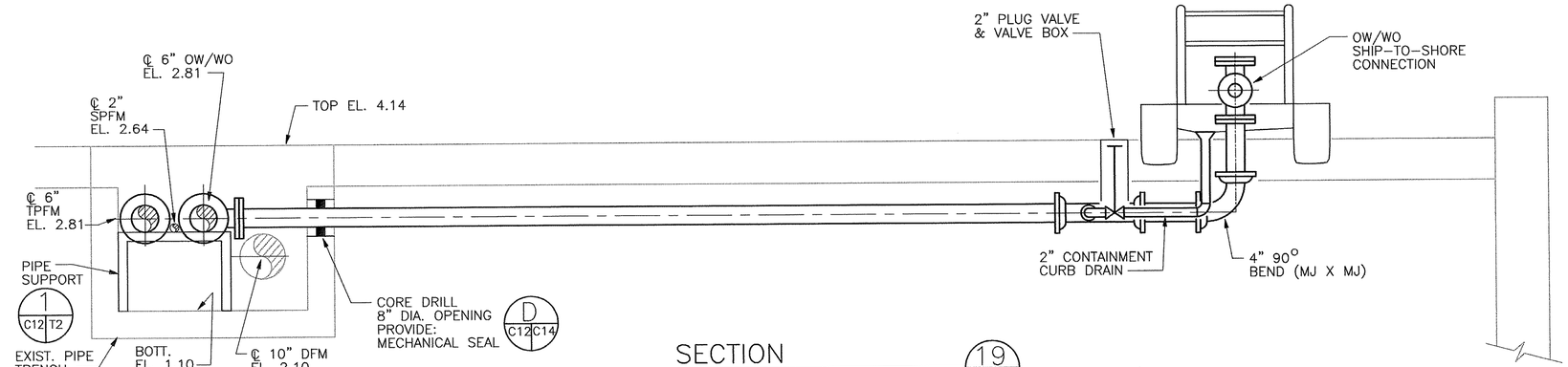

SECTION 19 (C7 | C12)
SCALE: 3/4" = 1'-0"

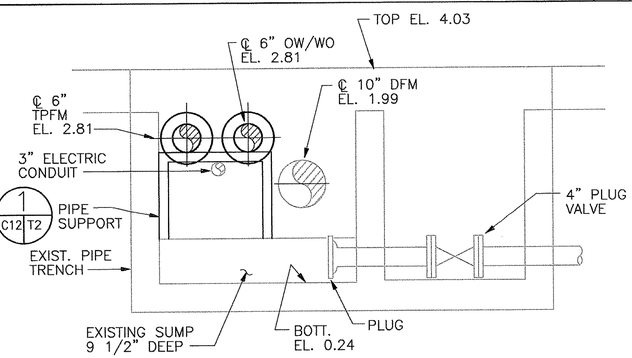

SECTION 20 (C8 | C12)
SCALE: 3/4" = 1'-0"

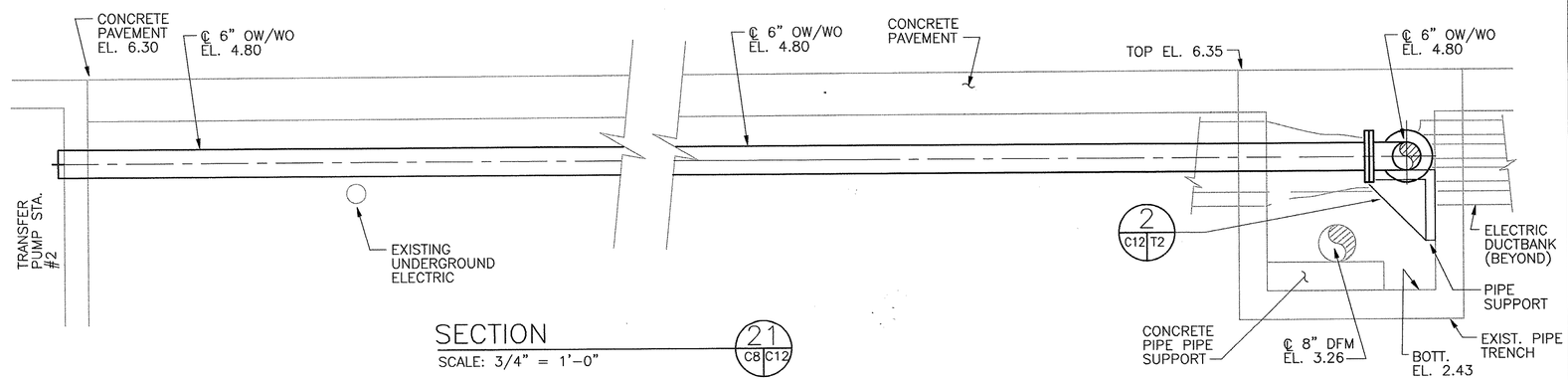

SECTION 21 (C8 | C12)
SCALE: 3/4" = 1'-0"

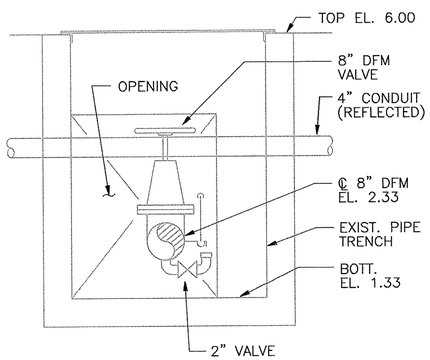

SECTION 21 (C8 | C12)
SCALE: 3/4" = 1'-0"

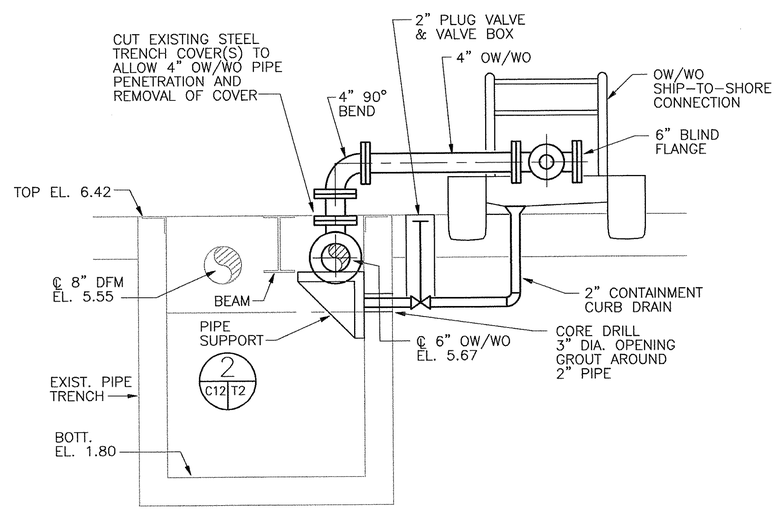

SECTION 22 (C9 | C12)
SCALE: 3/4" = 1'-0"

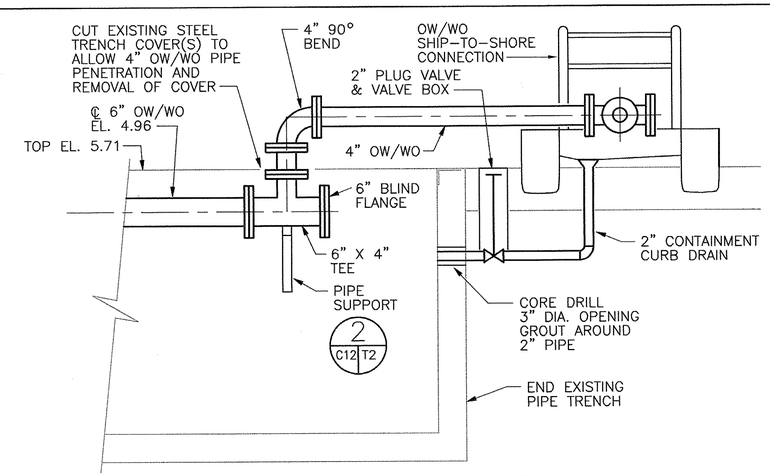

SECTION 23 (C9 | C12)
SCALE: 3/4" = 1'-0"

IF THIS DRAWING IS A REDUCTION, GRAPHIC SCALE MUST BE USED

3/4"=1'-0" 4' 0 4'

REVISIONS			
STAL	DESCRIPTION	DATE	APPROVED

DESIGN CH
DRAWN CH
REVIEW JH
APPV'L OIC
PROJECT MANAGER
FIRE PROTECTION
BRANCH MANAGER
DESIGN DIRECTOR

GEE & JENSON
Engineers • Architects • Planners, Inc.
PR, MARYLAND, CHICO, FORT PIERCE, & ORLANDO

A/E CONTRACT NO. 98-D-5081
ACTIVITY – SATISFACTORY TO
APPROVED
APPROVED
DATE
DATE
FOR: EFD FOR COMMENTS MAPAC

SEAL

DEPARTMENT OF THE NAVY
NAVAL STATION
NAVAL FACILITIES ENGINEERING COMMAND
NORFOLK, VIRGINIA
ATLANTIC DIVISION
U.S. NAVAL STATION GUANTANAMO BAY, CUBA
OILY WASTE/WASTE OIL COLLECTION
PIER A AND WHARVES B, T, AND U
SECTIONS

CODE ID. NO. 80091 | SIZE D
SCALE: AS NOTED
EFD NO.
STA. PROJ. NO.
SPEC. NO. 05-00-4505
CONSTR. CONTR. NO. N62470-00-C-4505
NAVFAC DRAWING NO. 4407606
SHEET C-12 OF

8805C012
DRAWFORM REVISION 25 SEPT 96

P:\Mech\8805C012.DWG Last Update: 8/4/2000 Plotted: 8/4/2000 1:25 pm By: hammond Plot Scale: 1=1.0 Xref Dwg's:

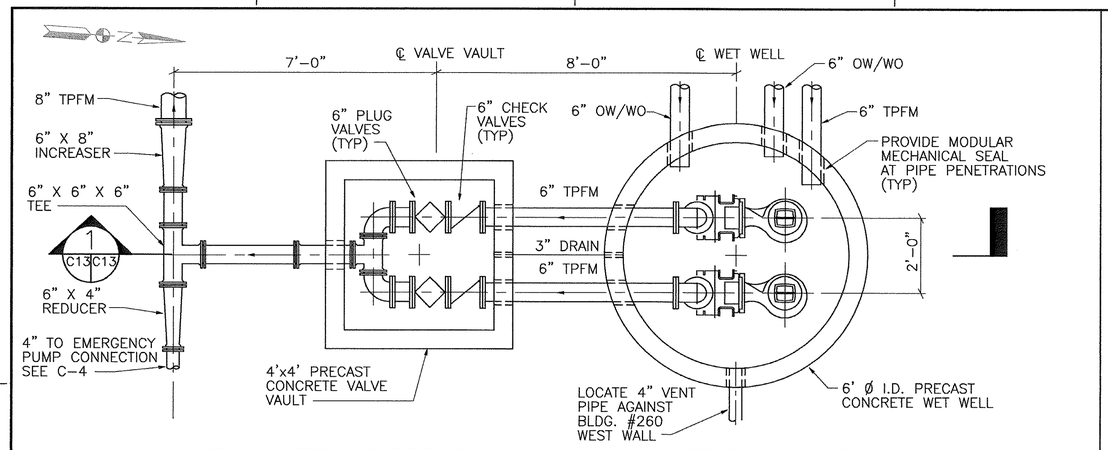

PLAN TRANSFER PUMP STATION, TPS-1

A C4 C13

SCALE: 1/2" = 1'-0"

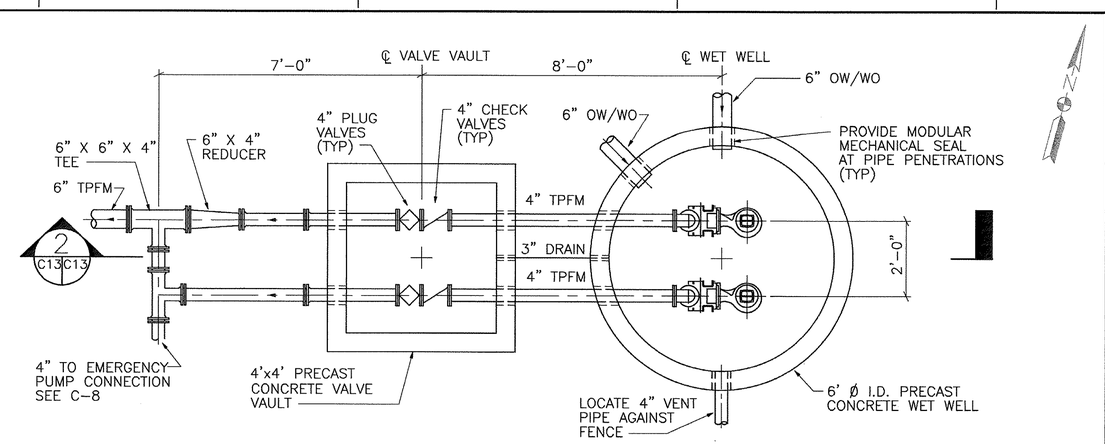

PLAN TRANSFER PUMP STATION, TPS-2

B C8 C13

SCALE: 1/2" = 1'-0"

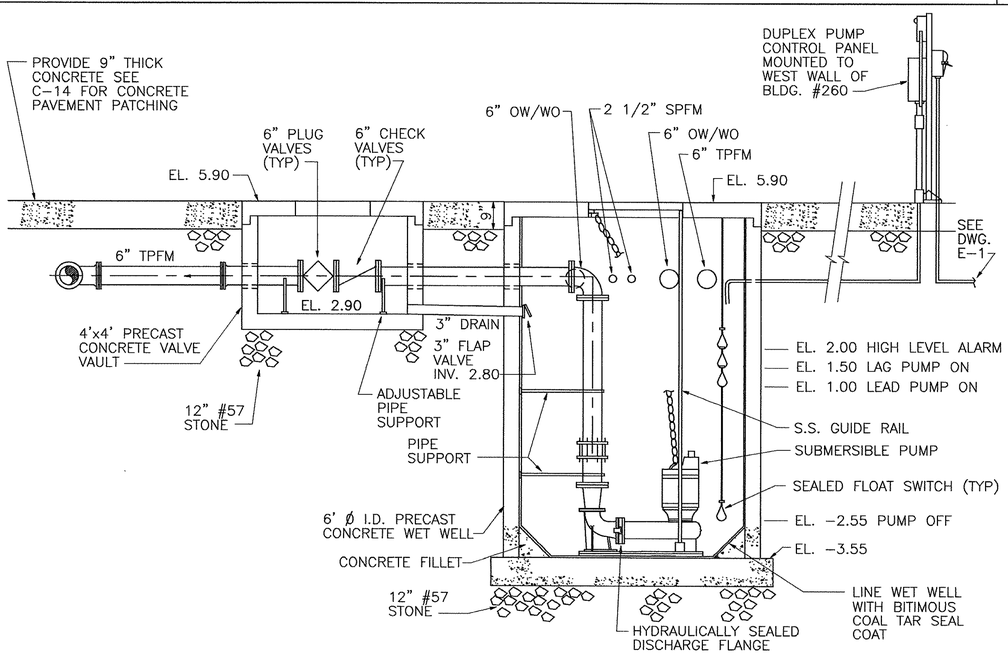

SECTION

1 C13 C13

SCALE: 1/2" = 1'-0"

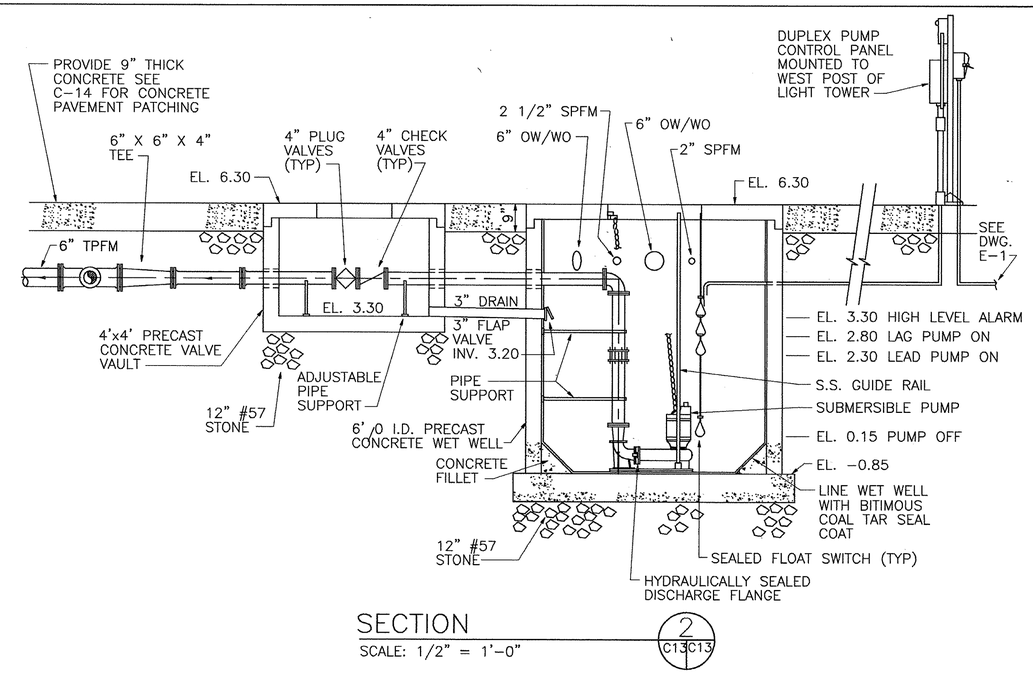

SECTION

2 C13 C13

SCALE: 1/2" = 1'-0"

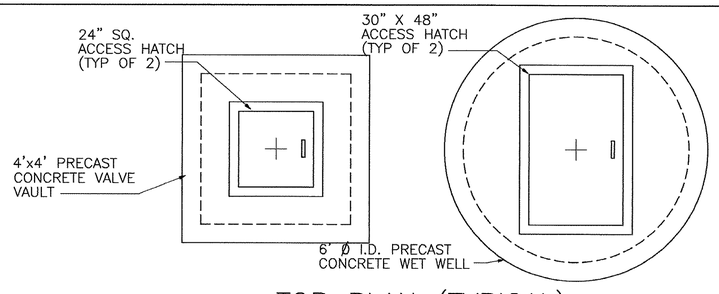

TOP PLAN (TYPICAL)

SCALE: 1/2" = 1'-0"

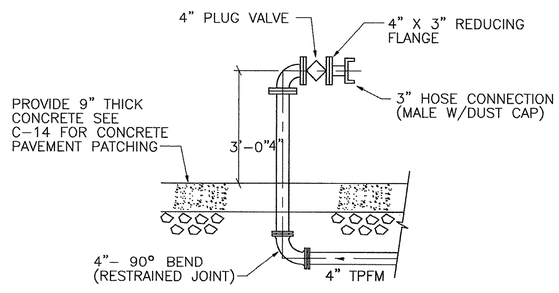

EMERGENCY PUMP CONNECTION

C C13

C4,C8

SCALE: 1/2" = 1'-0"

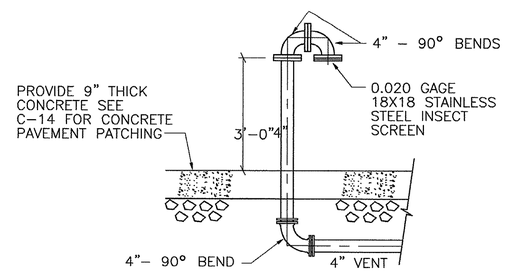

WETWELL VENT TYPICAL

SCALE: 1/2" = 1'-0"

IF THIS DRAWING IS A REDUCTION, GRAPHIC SCALE MUST BE USED

1/2"=1'-0" 4' 0 4'

REVISIONS

SYM.	DESCRIPTION	DATE	APPROVED

A/E CH DESIGN; CH DRAWN; JH REVIEW; QC; CHIEF ARCH./ ENGR.; PROJECT MANAGER; FIRE PROTECTION; BRANCH MANAGER; DESIGN DIRECTOR

GEE & JENSON Engineers • Architects • Planners, Inc. Florida 32445 • Tel 850/234-3341 • Fax 850/234-2629

A/E CONTRACT NO. 89-D-5081 DATE

ACTIVITY – SATISFACTORY TO DATE

APPROVED

APPROVED

FOR EFD FOR COMMANDER NAVFAC

SEAL

DEPARTMENT OF THE NAVY NAVAL FACILITIES ENGINEERING COMMAND

NAVAL STATION ATLANTIC DIVISION NORFOLK, VIRGINIA

U.S. NAVAL STATION GUANTANAMO BAY, CUBA

OILY WASTE/WASTE OIL COLLECTION PIER A AND WHARVES B, T, AND U

TRANSFER PUMP STA. DETAILS

CODE ID. NO. 80091	SIZE D
SCALE: AS NOTED	
EFD NO.	
STA. PROJ. NO.	
SPEC. NO. 05-00-4505	
CONSTR. CONTR. NO. N62470-00-C-4505	
NAVFAC DRAWING NO. 4407607	
SHEET C-13	OF

8805C013

DRAWFORM REVISION 25 SEPT 96

REVDATE 16

P:\Mech\8805C013.DWG Last Update: 8/4/2000 Plotted: 8/4/2000 1:25 pm By: hammond Plot Scale: 1=1.0 Xref Dwg's:

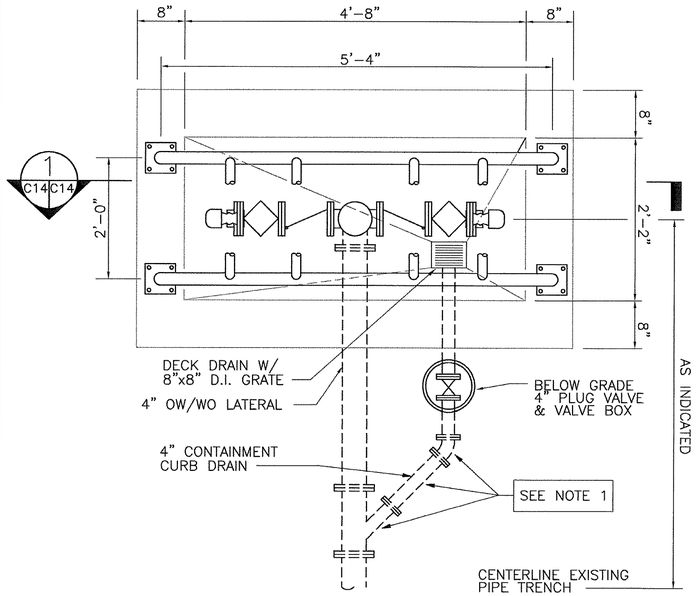

PLAN

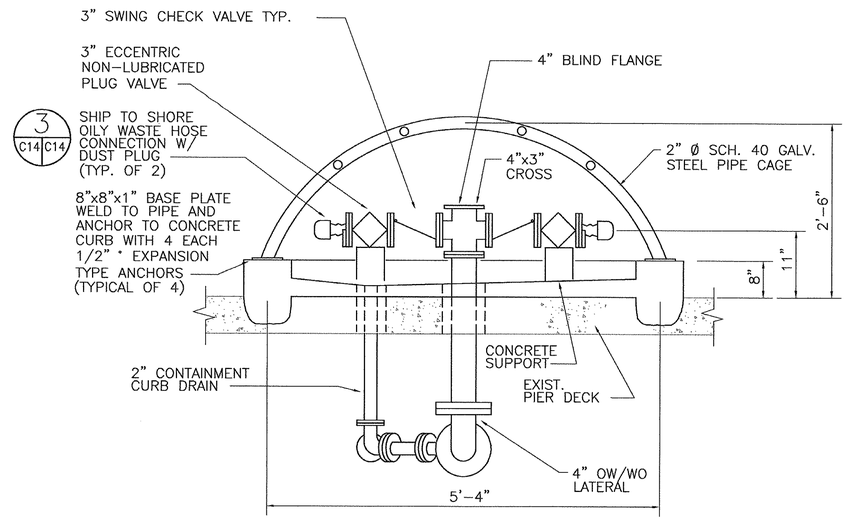

SECTION 1 C14 C14

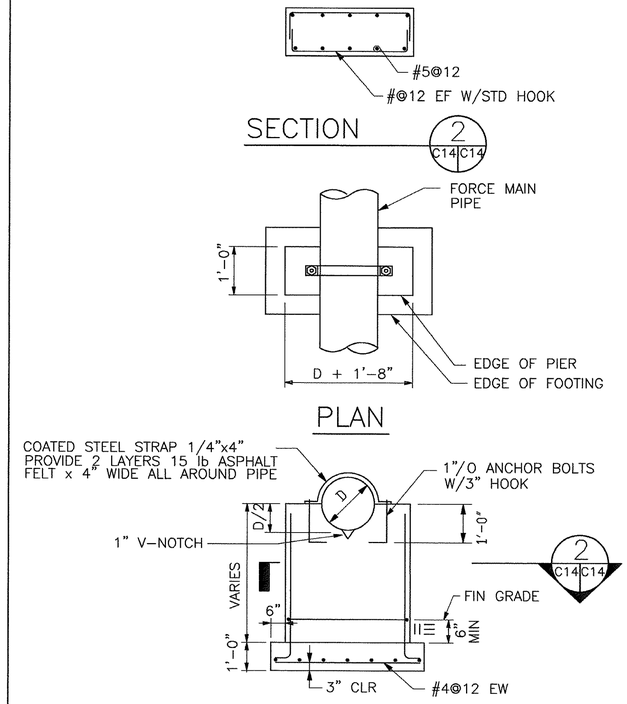

ELEVATION

STANDARD DRY LAND PIPE SUPPORT PIER

NOT TO SCALE

NOTE 1: THIS ARRANGEMENT APPLIES TO SECTION 7/C4/C10 AND 17/C7/C12 ONLY. OTHER ARRANGEMENT AS INDICATED IN SECTION 12/C5/C11, 21/C9/C12 AND 22/C9/C12.

PIER/WHARF SHIP-TO-SHORE CONNECTION 2 C4,C5,C7,C9 C14

NOT TO SCALE

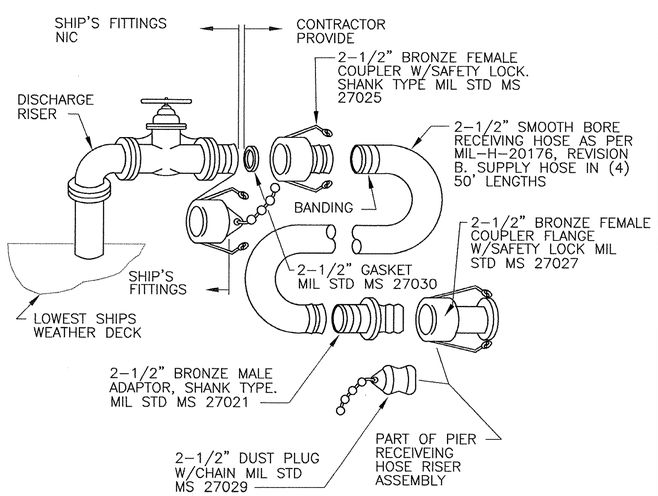

SHIP TO SHORE CONNECTION 3 C14 C14

NOT TO SCALE

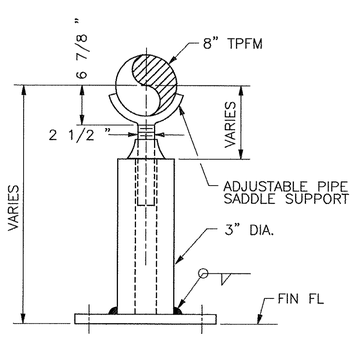

ADJUSTABLE PIPE SUPPORT E C1 C14

NOT TO SCALE

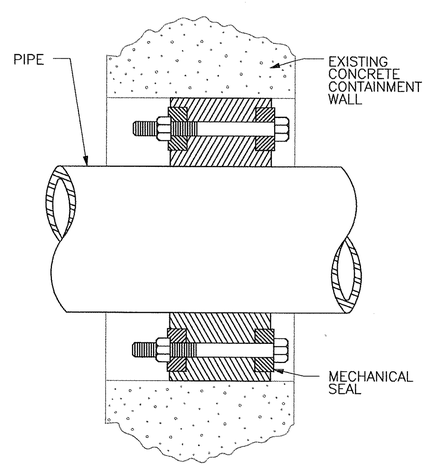

PIPE PENETRATION DETAIL D C1 C14

NOT TO SCALE

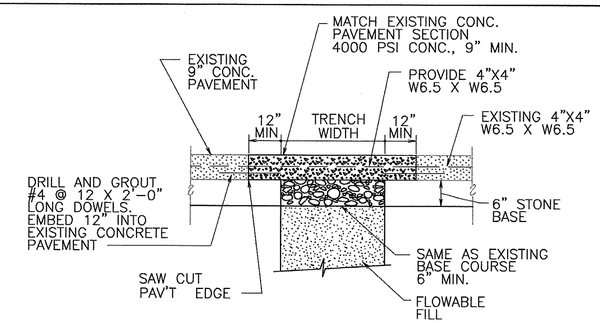

CONCRETE PAVEMENT PATCHING

NOT TO SCALE

NOTE: NEW PAVEMENT JOINTS SHALL MATCH EXISTING PAVEMENT JOINT PATTERN

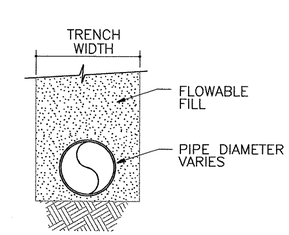

PIPE BEDDING

NOT TO SCALE

REVISIONS

DESCRIPTION	DATE	APPROVED

A/E CH DESIGN
CH DRAWN
JH REVIEW
QC CHIEF ARCH/ ENGR.
PROJECT MANAGER
FIRE PROTECTION
BRANCH MANAGER
DESIGN DIRECTOR

GEE & JENSON
ENGINEERS-ARCHITECTS-PLANNERS, INC.
SUITE 400, 650 POYDRAS STREET, NEW ORLEANS, LA 70130
CERTIFICATE OF AUTHORITY NO. 00026 - TB 00026A - LA 00026B

A/E CONTRACT NO. 99-D-5091 DATE
APPROVED
ACTIVITY — SATISFACTORY TO DATE
APPROVED
FOR BPO PWD COMMANDER NAVFAC

DEPARTMENT OF THE NAVY
NAVAL STATION
NAVAL FACILITIES ENGINEERING COMMAND
ATLANTIC DIVISION
NORFOLK, VIRGINIA

U.S. NAVAL STATION GUANTANAMO BAY, CUBA
OILY WASTE/WASTE OIL COLLECTION
PIER A AND WHARVES B, T, AND U
SECTIONS

CODE ID. NO. 80091 SIZE D
SCALE: AS NOTED
EFD NO.
STA. PROJ. NO.
SPEC. NO. 05-00-4505
CONSTR. CONTR. NO. N62470-00-C-4505
NAVFAC DRAWING NO. 4407608
SHEET OF
C-14

8805C014
DRAWFORM REVISION 25 SEPT 96

P:\Mech\8805C014.DWG Last Update: 8/4/2000 Plotted: 8/4/2000 1:25 pm By: hammond Plot Scale: 1=1.0 Xref Dwg's:

REVDATE

GENERAL NOTES FOR SUBSURFACE EXPLORATION LOGS

1. NUMBERS IN SAMPLING DATA COLUMN (3+6+27) INDICATE BLOWS REQUIRED TO DRIVE A 2 INCH O.D., 1 3/8 INCH I.D. SAMPLING SPOON 6 INCHES USING A 140 POUND HAMMER FALLING 30 INCHES, ACCORDING TO ASTM D-1586.
2. VISUAL CLASSIFICATION OF SOIL IS IN ACCORDANCE WITH TERMINOLOGY SET FORTH IN "IDENTIFICATION OF SOILS." THE GROUP CLASSIFICATION SYMBOLS SHOWN IN THE CLASSIFICATION COLUMN ARE BASED ON VISUAL INSPECTION AND AVAILABLE LABORATORY DATA.
3. GROUNDWATER OBSERVATIONS: THE DEPTH OF WATER BELOWGRADE WAS MEASURED AT THE TIMES INDICATED. THE DEPTHS MAY VARY WITH PRECIPITATION, POROSITY OF THE SOIL, SITE TOPOGRAPHY, ETC.
4. REFUSAL AT THE SURFACE OF ROCK, BOULDER, OR OBSTRUCTION IS DEFINED AS AN SPT RESISTANCE OF 100 BLOWS FOR 2 INCHES OR LESS OF PENETRATION.
5. THE BORING LOGS AND RELATED INFORMATION DEPICT SUBSURFACE CONDITIONS ONLY AT THE SPECIFIC LOCATIONS AND AT THE PARTICULAR TIME WHEN DRILLED. SOIL CONDITIONS AT OTHER LOCATIONS MAY DIFFER FROM CONDITIONS OCCURRING AT THESE BORING LOCATIONS. ALSO, THE PASSAGE OF TIME MAY RESULT IN A CHANGE IN THE SUBSURFACE SOIL AND GROUNDWATER CONDITIONS AT THESE BORING LOCATIONS.
6. THE STRATIFICATION LINES REPRESENT THE APPROXIMATE BOUNDARY BETWEEN SOIL AND ROCK TYPES AS DETERMINED FROM THE SUBSURFACE EXPLORATION. SOME VARIATION MAY ALSO BE EXPECTED VERTICALLY BETWEEN SAMPLES TAKEN. THE SOIL PROFILE, WATER LEVEL OBSERVATIONS AND PENETRATION RESISTANCES PRESENTED ON THESE LOGS HAVE BEEN MADE WITH REASONABLE CARE AND ACCURACY AND MUST BE CONSIDERED ONLY AN APPROXIMATE REPRESENTATION OF SUBSURFACE CONDITIONS TO BE ENCOUNTERED AT THE PARTICULAR LOCATION.
7. TEST BORING DRILLED BY ATEC ASSOCIATES, 11/87.
8. KEY TO SYMBOLS AND ABBREVIATIONS:

☒	5+10+15	STANDARD PENETRATION TEST, ASTM D1586 DESIGNATION
■	3T 24/18	2" OR 3" UNDISTURBED TUBE SAMPLE, ASTM D1586 (LENGTH PUSHED/RECOVERY IN INCHES)
⧅	REC RQD	NQZ, NX OR 2 INCH O.D. ROCK CORE RUN, ASTM D2113 (RECOVERY AND RQD AS SHOWN)
	DO	DITTO
	RQD	ROCK QUALITY DESIGNATION
	W	WATER CONTENT (% OF DRY WEIGHT)
	REC	RECOVERY IN PERCENT FOR EACH SUCCESSIVE RUN
	*	NO SAMPLE RECOVERY

I. DEFINITION OF SOIL GROUP NAMES (ASTM D-2487-83)

			SYMBOL	GROUP NAME
COARSE-GRAINED SOILS MORE THAN 50% RETAINED ON No. 200 SIEVE	GRAVELS – MORE THAN 50% OF COARSE FRACTION RETAINED ON No. 4 SIEVE COARSE, 3/4 " TO 3" FINE, No. 4 TO 3/4 "	CLEAN GRAVELS LESS THAN 5% FINES	GW	WELL GRADED GRAVEL
			GP	POORLY GRADED GRAVEL
		GRAVELS WITH FINES MORE THAN 12% FINES	GM	SILTY GRAVEL
			GC	CLAYEY GRAVEL
	SANDS – 50% OR MORE OF COARSE FRACTION PASSES No. 4 SIEVE COARSE, No. 10 TO No. 4 MEDIUM, No. 40 TO No. 10 FINE, No. 200 TO No. 40	CLEAN SANDS LESS THAN 5% FINES	SW	WELL-GRADED SAND
			SP	POORLY GRADED SAND
		SANDS WITH FINES MORE THAN 12% FINES	SM	SILTY SAND
			SC	CLAYEY SAND
FINE-GRAINED SOILS 50% OR MORE PASSES THE No. 200 SIEVE	SILTS AND CLAYS – LIQUID LIMIT LESS THAN 50 LOW TO MEDIUM PLASTICITY	INORGANIC	CL	LEAN CLAY
			ML	SILT
		ORGANIC	OL	ORGANIC CLAY ORGANIC SILT
	SILTS AND CLAYS – LIQUID LIMIT 50 OR MORE MEDIUM TO HIGH PLASTICITY	INORGANIC	CH	FAT CLAY
			MH	ELASTIC SILT
		ORGANIC	OH	ORGANIC CLAY ORGANIC SILT
HIGHLY ORGANIC SOILS	PRIMARILY ORGANIC MATTER, DARK IN COLOR AND ORGANIC ODOR		PT	PEAT

II. DEFINITION OF MINOR COMPONENT PROPORTIONS

MINOR COMPONENT	APPROXIMATE PERCENTAGE OF FRACTION BY WEIGHT
ADJECTIVE FORM GRAVELLY, SAND WITH SAND, GRAVEL SILTY, CLAY TRACE SAND, GRAVEL SILTY, CLAY	30% OR MORE COARSE GRAINED 15% OR MORE COARSE GRAINED 5% TO 12% FINE GRAINED LESS THAN 15% COARSE GRAINED LESS THAN 5% FINE GRAINED

LOG OF BORING NO. 1

CLIENT: U.S. Navy
PROJECT NAME: Wharf Bravo
PROJECT LOCATION: Guantanamo Bay, Cuba
BORING LOCATION:
FOREMAN: Benson
INSPECTOR: Kattan

JOB NO.: 26-71558
DATE: 10/31/87
BORING METHOD: HSA
ROCK CORE DIA.: IN.
SHELBY TUBE DIA.: IN.

Page 1 of 2

MATERIAL DESCRIPTION	STRATUM DEPTH, FT.	DEPTH, FT.	SAMPLE NO.	STD. PENETRATION BLOWS/6 IN: THREE 6 IN. INCREMENTS	RECOVERY	SHELBY TUBE NO.	BORING AND SAMPLING NOTES
CONCRETE 8"							x: Denotes concrete
Light gray, moist, stiff to very stiff, fine to coarse Sandy CLAY (CL), some coral fragments			1	x/9 8/6 6/7	14		
(Fill)	4.0		2	8/12	20		
Light gray, very moist to saturated, loose to medium dense, Silty fine to coarse SAND (SM) and coral fragments		5	3	3/2 3/3 5/7	20		
(Fill)	8.0		4	7/10	14		
Light greenish gray, very moist to saturated, very soft to medium stiff, fine to medium Sandy CLAY (CL-SC), some coral fragments, trace Silt, marine shell fragments and roots			5	2/2 1/1	14		Although the material is generally the same, SAND and CLAY proportions vary from sample to sample
		10	6	1/2 2/1	20		
				2			
		15	7	4/1	18		
				2			
		20	8	2/2	18		
(Fill)							
				1			
		25	9	1/1	18		
				2			
		30	10	2/2	18		
				2			
		35	11	3/2	18		

WATER LEVEL OBSERVATION
NOTED ON RODS ____ FT.
AT COMPLETION ____ FT.
AFTER ____ HRS. ____ FT.

BORING METHOD
HAS -HOLLOW STEM AUGER
CFA -CONTINUOUS FLIGHT AUGER
DC - DRIVEN CASING
MD - MUD DRILLING
RC - ROCK CORING

THESE SHELBY TUBE SAMPLES OBTAINED IN AN AUXILIARY BORING DRILLED A FEW FEET FROM THIS BORING

LOG OF BORING NO. 1

CLIENT: U.S Navy
PROJECT NAME: Wharf Bravo
PROJECT LOCATION: Guantanamo Bay, Cuba
BORING LOCATION:
FOREMAN: Benson
INSPECTOR: Kattan

JOB NO.: 26-71558
DATE: 10/31/87
BORING METHOD: HSA
ROCK CORE DIA.:
SHELBY TUBE DIA.:

Page 2 of 2

MATERIAL DESCRIPTION	STRATUM DEPTH, FT.	DEPTH, FT.	SAMPLE NO.	STD. PENETRATION BLOWS/6 IN: THREE 6 IN. INCREMENTS	RECOVERY	SHELBY TUBE NO.	BORING AND SAMPLING NOTES
Light greenish gray, very moist to saturated, very soft to medium stiff, fine to medium Sandy CLAY (CL-SC), some coral fragments, trace Silt, marine shell fragments and roots							Although the material is generally the same, SAND and CLAY proportions vary from sample to sample
		40	12	2 2/2	18		
	45.0	45	13	3 3/3	18		
Bottom of boring 45.0'							
							* Caved in @ 4.0'

WATER LEVEL OBSERVATION
NOTED ON RODS 4.0 FT.
AT COMPLETION 3.5 FT. *
AFTER ____ HRS. ____ FT.

BORING METHOD
HAS -HOLLOW STEM AUGER
CFA -CONTINUOUS FLIGHT AUGER
DC - DRIVEN CASING
MD - MUD DRILLING
RC - ROCK CORING

THESE SHELBY TUBE SAMPLES OBTAINED IN AN AUXILIARY BORING DRILLED A FEW FEET FROM THIS BORING

REVISIONS

SYM.	DESCRIPTION	DATE	APPROVED

A/E C.H. DESIGN
C.H. DRAWN
J.H. REVIEW
QC CHIEF ARCH/ ENGR.
PROJECT MANAGER
FIRE PROTECTION
BRANCH MANAGER
DESIGN DIRECTOR

GEE & JENSON
ENGINEERS-ARCHITECTS-PLANNERS, INC.
PROF. ENGINEERS, ARCHITECTS, PLANNERS
PIER 38, NORTH RIVER
NEW YORK, N.Y. 10282-1111

A/E CONTRACT NO. 88-D-5091
APPROVED DATE
ACTIVITY APPROVED DATE

DEPARTMENT OF THE NAVY
NAVAL STATION
ATLANTIC DIVISION
NAVAL FACILITIES ENGINEERING COMMAND
NORFOLK, VIRGINIA

U.S. NAVAL STATION GUANTANAMO BAY, CUBA
OILY WASTE/WASTE OIL COLLECTION
PIER A AND WHARVES B, T, AND U
SOIL BORINGS

CODE ID. NO. 80091 SIZE D
SCALE: NONE
EFD NO.
STA. PROJ. NO.
SPEC. NO. 05-00-4505
CONSTR. CONTR. NO. N62470-00-C-4505
NAVFAC DRAWING NO. 4407609
SHEET OF
C-15

8805C015
DRAWFORM REVISION 25 SEPT 96

REV/DATE

P:\Mech\8805C015.DWG Last Update: 8/2/2000 Plotted: 8/4/2000 1:25 pm By: hammond Plot Scale: 1=1.0 Xref Dwg's:

LOG OF BORING NO.: 2A

CLIENT: U.S. Navy
PROJECT NAME: Wharf Bravo
PROJECT LOCATION: Guantanamo Bay, Cuba
BORING LOCATION:
FOREMAN: Benson
INSPECTOR: Kattan

JOB NO.: 26-71558
DATE: 11/4/87
BORING METHOD: HSA
ROCK CORE DIA.:
SHELBY TUBE DIA.:

Page 1

MATERIAL DESCRIPTION	STRATUM DEPTH, FT.	DEPTH, FT.	STD. PENETRATION SAMPLE NO.	BLOWS/6 IN: THREE 6 IN. INCREMENTS	RECOVERY	SHELBY TUBE NO.	BORING AND SAMPLING NOTES
CONCRETE 8"			1				Refusal at 8"
							No recovery
		5	3				
			4				
			5				
		10	6				
		15	7				
		20	8				
		25	9				
		30	10				
		35	11				

WATER LEVEL OBSERVATION
NOTED ON RODS _____ FT.
AT COMPLETION _____ FT.
AFTER ____ HRS. _____ FT.

BORING METHOD
HAS -HOLLOW STEM AUGER
CFA -CONTINUOUS FLIGHT AUGER
DC - DRIVEN CASING
MD - MUD DRILLING
RC - ROCK CORING

THESE SHELBY TUBE SAMPLES OBTAINED IN AN AUXILIARY BORING DRILLED A FEW FEET FROM THIS BORING

LOG OF BORING NO.: 3

CLIENT: U.S. Navy
PROJECT NAME: Wharf Bravo
PROJECT LOCATION: Guantanamo Bay, Cuba
BORING LOCATION:
FOREMAN: Benson
INSPECTOR: Kattan

JOB NO.: 26-71558
DATE: 10/31/87
BORING METHOD: HSA
ROCK CORE DIA.:
SHELBY TUBE DIA.:

Page 1 of 2

MATERIAL DESCRIPTION	STRATUM DEPTH, FT.	DEPTH, FT.	STD. PENETRATION SAMPLE NO.	BLOWS/6 IN: THREE 6 IN. INCREMENTS	RECOVERY	NO.	BORING AND SAMPLING NOTES
CONCRETE 9.5"							
Dark brown, dry to moist, very soft to medium stiff, fine to medium Sandy CLAY (CL_SC), some gravel, marine shell fragments, coral fragments			1	x/x 2/2 3/2	10		Although the material is generally the same, SAND and CLAY proportions vary from sample to sample
				1/1 3/1	16		
		5	3	1/1 3/3	14		
			4	2/3 3/1	15		
		10	5	3/3 3/2	12		
			6	2/2 3	16		
		15	7	4/4	16		
(Fill)	18.0						
Dark gray, very moist, medium stiff, fine Sandy CLAY (CL), coral fragments, and marine shell fragments		20	8	4 4/4	18		
(Fill)	23.0						
Gray and brown, very moist to saturated, very soft to medium stiff, fine to medium Sandy CLAY (CL-SC), some marine shell fragments, gravel and coral fragments (Fill)		25	9	1 1/1	18		Although the material is generally the same, SAND and CLAY proportions vary from sample to sample
		30	10	1 2/1	18		
		35	11	4 3/3	16		

WATER LEVEL OBSERVATION
NOTED ON RODS _____ FT.
AT COMPLETION _____ FT.
AFTER ____ HRS. _____ FT.

BORING METHOD
HAS -HOLLOW STEM AUGER
CFA -CONTINUOUS FLIGHT AUGER
DC - DRIVEN CASING
MD - MUD DRILLING
RC - ROCK CORING

THESE SHELBY TUBE SAMPLES OBTAINED IN AN AUXILIARY BORING DRILLED A FEW FEET FROM THIS BORING

LOG OF BORING NO.: 17

CLIENT: U.S. Navy
PROJECT NAME: Wharf Bravo
PROJECT LOCATION: Guantanamo Bay, Cuba
BORING LOCATION:
FOREMAN: Benson
INSPECTOR: Kattan

JOB NO.: 26-71558
DATE: 11/3/87
BORING METHOD: HSA
ROCK CORE DIA.:
SHELBY TUBE DIA.:

Page 1 of 2

MATERIAL DESCRIPTION	STRATUM DEPTH, FT.	DEPTH, FT.	STD. PENETRATION SAMPLE NO.	BLOWS/6 IN: THREE 6 IN. INCREMENTS	RECOVERY	SHELBY TUBE NO.	BORING AND SAMPLING NOTES
CONCRETE 8"							
Light gray, moist, very soft to stiff, find Sandy CLAY (CL), some coral fragments, trace Silt			1	x/3 7/7 10/9	12		
				6/5	20		
(Fill)	6.0	5	3	2/2 2/1	19		
Light greenish gray, very moist, medium stiff to stiff, CLAY (CL-CH), some coral fragments, trace fine to coarse Sand, trace Silt			4	3/3 4/3	20		
		10	5	3/10 14/10	12		
(Fill)	13.0		6	5/6 6/7	19		
Light brown and tan, very moist, medium stiff to stiff, CLAY (CH), some coral fragments		15	7	4 5/6	18		
		20	8	8 4/5	18		
	23.0						
Light gray and tan, very moist, very stiff to hard, find Sandy CLAY (CL-CH), little coral fragments and gravel		25	9	5 12/14	18		
		30	10	12 17/22	18		
(Fill)	33.0						
Brown, moist to very moist, very dense, GRAVEL (GP), and Clayey fine to coarse SAND (SC), trace coral fragments		35	11	24 31/39	18		

WATER LEVEL OBSERVATION
NOTED ON RODS _____
AT COMPLETION _____
AFTER ____ HRS. _____

BORING METHOD
HAS -HOLLOW STEM AUGER
CFA -CONTINUOUS FLIGHT AUGER
DC - DRIVEN CASING
MD - MUD DRILLING
RC - ROCK CORING

THESE SHELBY TUBE SAMPLES OBTAINED IN AN AUXILIARY BORING DRILLED A FEW FEET FROM THIS BORING

LOG OF BORING NO.: 2B

CLIENT: U.S. Navy
PROJECT NAME: Wharf Bravo
PROJECT LOCATION: Guantanamo Bay, Cuba
BORING LOCATION:
FOREMAN: Benson
INSPECTOR: Kattan

JOB NO.: 26-71558
DATE: 11/6/87
BORING METHOD: HSA
ROCK CORE DIA.:
SHELBY TUBE DIA.:

Page 1

MATERIAL DESCRIPTION	STRATUM DEPTH, FT.	DEPTH, FT.	STD. PENETRATION SAMPLE NO.	BLOWS/6 IN: THREE 6 IN. INCREMENTS	RECOVERY	SHELBY TUBE NO.	BORING AND SAMPLING NOTES
CONCRETE 8.5"							
Greenish brown, very moist, medium dense to very loose, Clayey fine to coarse SAND (SP) and gravel			1	x/4 6/8 3/2	10		Refusal at 6.5'
				3/5 1/3	12		No recovery - Concrete
		5	3	3/3 1	14		
(Fill)	6.5		4	100/0	0		
Bottom of boring 6.5'			5				
		10	6				
		15	7				
		20	8				
		25	9				
		30	10				
		35	11				

WATER LEVEL OBSERVATION
NOTED ON RODS 5.5 FT.
AT COMPLETION _____ FT.
AFTER ____ HRS. _____ FT.

BORING METHOD
HAS -HOLLOW STEM AUGER
CFA -CONTINUOUS FLIGHT AUGER
DC - DRIVEN CASING
MD - MUD DRILLING
RC - ROCK CORING

THESE SHELBY TUBE SAMPLES OBTAINED IN AN AUXILIARY BORING DRILLED A FEW FEET FROM THIS BORING

LOG OF BORING NO.: 3

CLIENT: U.S. Navy
PROJECT NAME: Wharf Bravo
PROJECT LOCATION: Guantanamo Bay, Cuba
BORING LOCATION:
FOREMAN: Benson
INSPECTOR: Kattan

JOB NO.: 26-71558
DATE: 10/31/87
BORING METHOD: HSA
ROCK CORE DIA.:
SHELBY TUBE DIA.:

Page 2 of 2

MATERIAL DESCRIPTION	STRATUM DEPTH, FT.	DEPTH, FT.	STD. PENETRATION SAMPLE NO.	BLOWS/6 IN: THREE 6 IN. INCREMENTS	RECOVERY	SHELBY TUBE NO.	BORING AND SAMPLING NOTES
Gray and brown, very moist to saturated, very soft to medium stiff, fine to medium Sandy CLAY (CL-SC), some marine shell fragments, gravel and coral fragments		40	12				Although the material is generally the same, SAND and CLAY proportions vary from sample to sample
(Fill)		45	13				
Bottom of boring 45.0'							Caved in @ 6.5'

WATER LEVEL OBSERVATION
NOTED ON RODS 4.5 FT.
AT COMPLETION 4.0 FT.
AFTER ____ HRS. _____ FT.

BORING METHOD
HAS -HOLLOW STEM AUGER
CFA -CONTINUOUS FLIGHT AUGER
DC - DRIVEN CASING
MD - MUD DRILLING
RC - ROCK CORING

THESE SHELBY TUBE SAMPLES OBTAINED IN AN AUXILIARY BORING DRILLED A FEW FEET FROM THIS BORING

LOG OF BORING NO.: 17

CLIENT: U.S. Navy
PROJECT NAME: Wharf Bravo
PROJECT LOCATION: Guantanamo Bay, Cuba
BORING LOCATION:
FOREMAN: Benson
INSPECTOR: Kattan

JOB NO.: 26-71558
DATE: 11/3/87
BORING METHOD: HSA
ROCK CORE DIA.:
SHELBY TUBE DIA.:

Page 2 of 2

MATERIAL DESCRIPTION	STRATUM DEPTH, FT.	DEPTH, FT.	STD. PENETRATION SAMPLE NO.	BLOWS/6 IN: THREE 6 IN. INCREMENTS	RECOVERY	SHELBY TUBE NO.	BORING AND SAMPLING NOTES
Brown, moist to very moist, very dense, GRAVEL (GP), and Clayey fine to coarse SAND (SC), trace coral fragments		40	12	26 39/43	18		
	45.0	45	13	21 37/39	18		
Bottom of boring 45.0'							* Caved in @ 21.0'

WATER LEVEL OBSERVATION
NOTED ON RODS 4.5 FT.
AT COMPLETION 5.0 FT. *
AFTER ____ HRS. _____ FT.

BORING METHOD
HAS -HOLLOW STEM AUGER
CFA -CONTINUOUS FLIGHT AUGER
DC - DRIVEN CASING
MD - MUD DRILLING
RC - ROCK CORING

THESE SHELBY TUBE SAMPLES OBTAINED IN AN AUXILIARY BORING DRILLED A FEW FEET FROM THIS BORING

REVISIONS

DESCRIPTION	DATE	APPROVED

A/E C.H. DESIGN
C.H. DRAWN
J.H. REVIEW
QC
CHIEF ARCH/ ENGR.
PROJECT MANAGER
FIRE PROTECTION
BRANCH MANAGER
DESIGN DIRECTOR

GEE & JENSON
PROFESSIONAL ENGINEERS, INC.
PIER AVENUE SUITE 1 POST PALM BEACH, FLORIDA 33404 (305) 845-1 FAX (305)845-1 A.E. CONTRACT NO. 83-D-5801

APPROVED
ACTIVITY - SATISFACTORY TO
APPROVED
DATE
FOR OFFICIAL USE OF COMMANDER NAVFAC

DEPARTMENT OF THE NAVY
NAVAL STATION
ATLANTIC DIVISION
NAVAL FACILITIES ENGINEERING COMMAND
NORFOLK, VIRGINIA

U.S. NAVAL STATION
GUANTANAMO BAY, CUBA
OILY WASTE/WASTE OIL COLLECTION
PIER A AND WHARVES B, T, AND U

SOIL BORING LOGS

CODE ID. NO. 80091 SIZE D
SCALE: AS NOTED
EFD NO.
STA. PROJ. NO.
SPEC. NO. 05-00-4505
CONSTR. CONTR. NO. N62470-00-C-4505
NAVFAC DRAWING NO. 4407610
SHEET OF
C-16

8805C016
DRAWFORM REVISION 25 SEPT 96

REVDATE 19

P:\Mech\8805C016.DWG Last Update: 8/2/2000 Plotted: 8/4/2000 1:25 pm By: hammond Plot Scale: 1=10.0 Xref Dwg's:

LOG OF BORING NO.: 18

CLIENT: U.S. Navy
PROJECT NAME: Wharf Bravo
PROJECT LOCATION: Guantanamo Bay, Cuba
BORING LOCATION:
FOREMAN: Benson
INSPECTOR: Kattan

JOB NO.: 26-71558
DATE: 11/4/87
BORING METHOD: HSA
ROCK CORE DIA.:
SHELBY TUBE DIA.:

Page 1 of 2

CONCRETE 8.5"

MATERIAL DESCRIPTION	STRATUM DEPTH, FT.	DEPTH, FT.	SAMPLE NO.	BLOWS/6 IN: THREE 6 IN. INCREMENTS	RECOVERY	SHELBY TUBE NO.	BORING AND SAMPLING NOTES
Tan, moist, stiff, find Sandy CLAY (CL) trace fine gravel (Fill)	2.0		1	7/1 5/10	14		
Tan very moist, medium dense to very loose, Clayey fine SAND (SC), and gravel, trace marine shell fragments				8/6 6/6	19		
		5	3	3/2 4/5	20		
(Fill)	8.0		4	4/4 3/4	19		
Dark gray, very moist, very soft, fine Sandy CLAY (CL), and marine shell fragments, some coral fragments		10	5	3/1 2/1	22		
			6	2/1 1/1	19		
(Fill)	13.0						
Light greenish gray, very moist, stiff to hard, find Sandy CLAY (CL-CH) and coral fragments		15	7	4 6/5	18		
		20	8	9 19/15	18		
(Fill)		25	9	7 14/18	18		
		30	10	6 5/6	18		
		35	11	6 7/10	18		

WATER LEVEL OBSERVATION
NOTED ON RODS _____ FT.
AT COMPLETION _____ FT.
AFTER ____ HRS. _____ FT.

BORING METHOD
HAS -HOLLOW STEM AUGER
CFA -CONTINUOUS FLIGHT AUGER
DC - DRIVEN CASING
MD - MUD DRILLING
RC - ROCK CORING

THESE SHELBY TUBE SAMPLES OBTAINED IN AN AUXILIARY BORING DRILLED A FEW FEET FROM THIS BORING

LOG OF BORING NO.: 19

CLIENT: U.S. Navy
PROJECT NAME: Wharf Bravo
PROJECT LOCATION: Guantanamo Bay, Cuba
BORING LOCATION:
FOREMAN: Benson
INSPECTOR: Kattan

JOB NO.: 26-71558
DATE: 11/4/87
BORING METHOD: HSA
ROCK CORE DIA.:
SHELBY TUBE DIA.:

Page 1

CONCRETE 10.5"

MATERIAL DESCRIPTION	STRATUM DEPTH, FT.	DEPTH, FT.	SAMPLE NO.	BLOWS/6 IN: THREE 6 IN. INCREMENTS	RECOVERY	SHELBY TUBE NO.	BORING AND SAMPLING NOTES
Brown, moist, loose to medium dense, Clayey fine to coarse SAND (SC) and gravel			1	4/4 8/9	6		
				12/16 0	10		
(Fill)	4.5	5	3	100/0			Refusal at 4.5'
Bottom of boring 4.5'			4				
		10	5				
			6				
		15	7				
		20	8				
		25	9				
		30	10				
		35	11				

WATER LEVEL OBSERVATION
NOTED ON RODS _____ FT.
AT COMPLETION 4.0 FT.
AFTER ____ HRS. _____ FT.

BORING METHOD
HAS -HOLLOW STEM AUGER
CFA -CONTINUOUS FLIGHT AUGER
DC - DRIVEN CASING
MD - MUD DRILLING
RC - ROCK CORING

THESE SHELBY TUBE SAMPLES OBTAINED IN AN AUXILIARY BORING DRILLED A FEW FEET FROM THIS BORING

LOG OF BORING NO.: 20

CLIENT: U.S. Navy
PROJECT NAME: Wharf Bravo
PROJECT LOCATION: Guantanamo Bay, Cuba
BORING LOCATION:
FOREMAN: Benson
INSPECTOR: Kattan

JOB NO.: 26-71558
DATE: 11/4/87
BORING METHOD: HSA
ROCK CORE DIA.:
SHELBY TUBE DIA.:

Page 2 of 2

MATERIAL DESCRIPTION	STRATUM DEPTH, FT.	DEPTH, FT.	SAMPLE NO.	BLOWS/6 IN: THREE 6 IN. INCREMENTS	RECOVERY	SHELBY TUBE NO.	BORING AND SAMPLING NOTES
Dark brown, saturated, medium dense, Clayey coarse SAND (SC), trace to little Gravel							
		40	12	7 9/8	16		
Dark brown, very moist, hard, fine Sandy CLAY (CL), trace coarse Sand	45.0	45	13	21 36/45	18		
Bottom of boring 45.0'							* Caved in @ 16.5'

WATER LEVEL OBSERVATION
NOTED ON RODS 5.5 FT.
AT COMPLETION 5.5 FT.
AFTER ____ HRS. _____ FT.

BORING METHOD
HAS -HOLLOW STEM AUGER
CFA -CONTINUOUS FLIGHT AUGER
DC - DRIVEN CASING
MD - MUD DRILLING
RC - ROCK CORING

THESE SHELBY TUBE SAMPLES OBTAINED IN AN AUXILIARY BORING DRILLED A FEW FEET FROM THIS BORING

LOG OF BORING NO.: 18

CLIENT: U. S. Navy
PROJECT NAME: Wharf Bravo
PROJECT LOCATION: Guantanamo Bay, Cuba
BORING LOCATION:
FOREMAN: Benson
INSPECTOR: Kattan

JOB NO.: 26-71558
DATE: 11/4/87
BORING METHOD: HSA
ROCK CORE DIA.:
SHELBY TUBE DIA.:

Page 2 of 2

MATERIAL DESCRIPTION	STRATUM DEPTH, FT.	DEPTH, FT.	SAMPLE NO.	BLOWS/6 IN: THREE 6 IN. INCREMENTS	RECOVERY	SHELBY TUBE NO.	BORING AND SAMPLING NOTES
Light greenish gray, very moist, stiff to hard, fine Sandy CLAY (CL-CH), and coral fragments	38.0						
Dark brown, very moist, very dense, Clayey fine to coarse SAND (SC)		40	12	22 31/46	18		
	45.0	45	13	9 36/49	18		
Bottom of boring 45.0'							* Caved in @ 16.5'

WATER LEVEL OBSERVATION
NOTED ON RODS 5.0 FT.
AT COMPLETION 5.5 FT. *
AFTER ____ HRS. _____ FT.

BORING METHOD
HAS -HOLLOW STEM AUGER
CFA -CONTINUOUS FLIGHT AUGER
DC - DRIVEN CASING
MD - MUD DRILLING

THESE SHELBY TUBE SAMPLES OBTAINED IN AN AUXILIARY BORING DRILLED A FEW FEET FROM THIS BORING

LOG OF BORING NO.: 20

CLIENT: U.S. Navy
PROJECT NAME: Wharf Bravo
PROJECT LOCATION: Guantanamo Bay, Cuba
BORING LOCATION:
FOREMAN: Benson
INSPECTOR: Kattan

JOB NO.: 26-71558
DATE: 11/4/87
BORING METHOD: HSA
ROCK CORE DIA.:
SHELBY TUBE DIA.:

Page 1 of 2

CONCRETE 10"

MATERIAL DESCRIPTION	STRATUM DEPTH, FT.	DEPTH, FT.	SAMPLE NO.	BLOWS/6 IN: THREE 6 IN. INCREMENTS	RECOVERY	SHELBY TUBE NO.	BORING AND SAMPLING NOTES
Light brown and gray, moist, stiff to very stiff, fine Sandy CLAY (CL), some marine shell fragments and gravel			1	7/7 6/9 7/9	14		
(Fill)	4.0			10/10	16		
Light brown and gray, very moist to saturated, very loose to medium dense to dense, Clayey fine to coarse SAND (SC), some marine shell fragmetns, coral fragments, and gravel, little wood chips		5	3	3/4 4/6	19		
			4	3/3 2/3	19		
		10	5	3/2 3/4	18		
			6	4/4 9/9	14		
		15	7	5 7/11	18		
		20	8	13 19/23	18		
(Fill)	23.0						
Light greenish gray, very stiff, fine Sandy CLAY (CL-CH), some marine shell fragments, gravel and coral fragments		25	9	6 12/16	18		
(Fill)	29.0						
Dark brown, saturated, medium dense, Clayey coarse SAND (SC), trace to little Gravel		30	10	12 11/17	18		
		35	11	9 14/12	16		

WATER LEVEL OBSERVATION
NOTED ON RODS 5.5 FT.
AT COMPLETION _____ FT.
AFTER ____ HRS. _____ FT.

BORING METHOD
HAS -HOLLOW STEM AUGER
CFA -CONTINUOUS FLIGHT AUGER
DC - DRIVEN CASING
MD - MUD DRILLING
RC - ROCK CORING

THESE SHELBY TUBE SAMPLES OBTAINED IN AN AUXILIARY BORING DRILLED A FEW FEET FROM THIS BORING

REVISIONS

REV	DESCRIPTION	DATE	APPROVED

EFD
C.H. DESIGN
C.H. DRAWN
J.H. REVIEW
CCS QC CHIEF ARCH/ ENGR.
PROJECT MANAGER
FIRE PROTECTION
BRANCH MANAGER
DESIGN DIRECTOR

A/E
SYM.

GEE & JENSON
Engineers • Architects • Planners, Inc.
Marine Science Consultants
Florida: 32004 • Texas: 77027 • Virginia: 23462
A/E CONTRACT NO. 62-C-3501

APPROVED
ACTIVITY - SATISFACTORY TO DATE
APPROVED DATE 10 Aug 00
FOR CO FOR COMMANDER, NAVFAC

SEAL

DEPARTMENT OF THE NAVY
NAVAL STATION
NAVAL FACILITIES ENGINEERING COMMAND
ATLANTIC DIVISION
NORFOLK, VIRGINIA
U.S. NAVAL STATION
GUANTANAMO BAY, CUBA
OILY WASTE/WASTE OIL COLLECTION
PIER A AND WHARVES B, T, AND U
SOIL BORING LOGS

CODE ID. NO. 80091 | SIZE D
SCALE: AS NOTED
EFD NO.
STA. PROJ. NO.
SPEC. NO. 05-00-4505
CONSTR. CONTR. NO. N62470-00-C-4505
NAVFAC DRAWING NO. 4407611
SHEET C-17 OF

8805C017

DRAWFORM REVISION 25 SEPT 96

REV/DATE

P:\Mech\8805C017.DWG Last Update: 8/2/2000 Plotted: 8/4/2000 1:25 pm By: hammond Plot Scale: 1=10.0 Xref Dwg's:

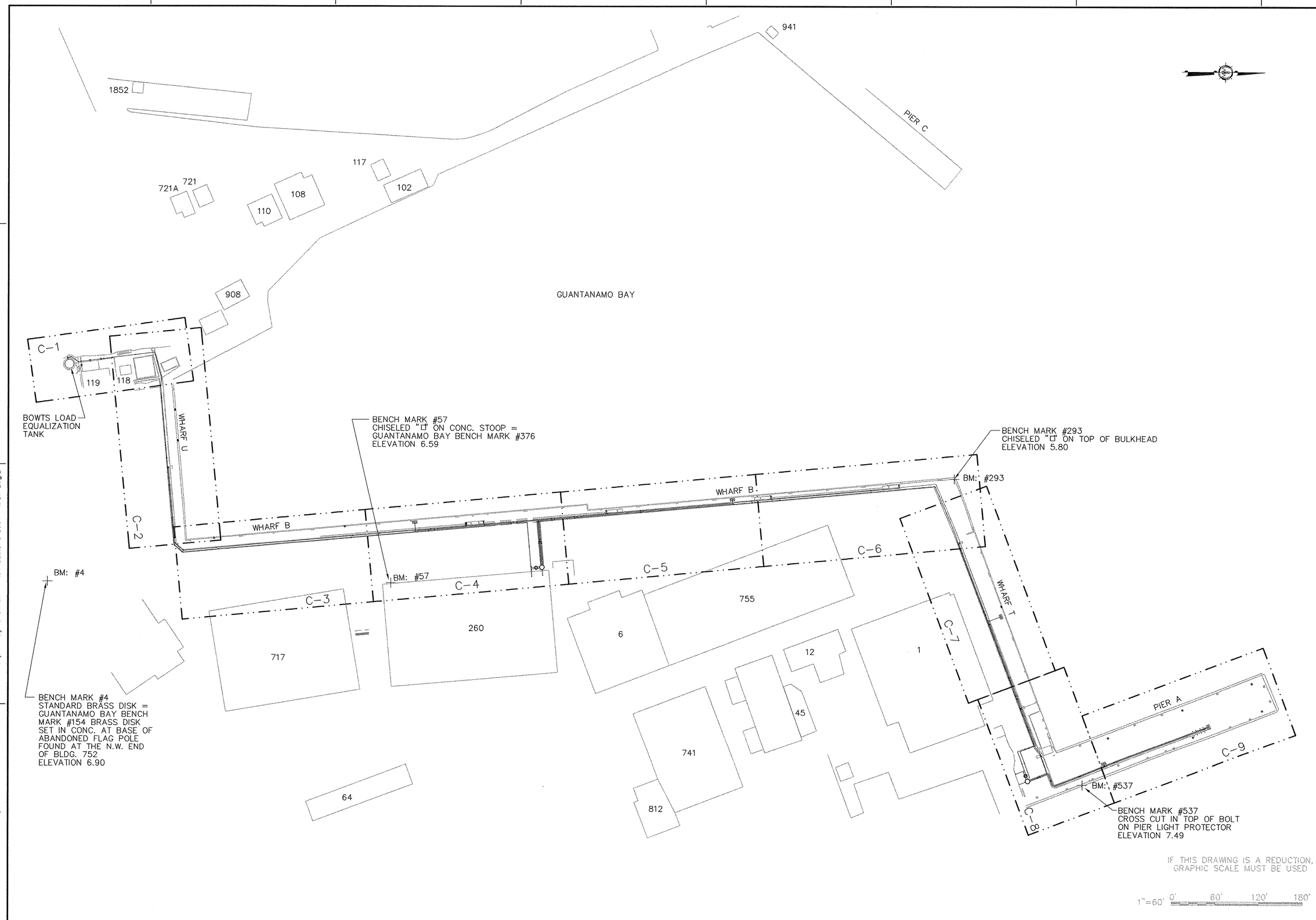

REVISIONS			
SYM.	DESCRIPTION	DATE	APPROVED

A/E EFD
DESIGN
DRAWN
REVIEW
QC
CHIEF ARCH./ ENGR.
PROJECT MANAGER
FIRE PROTECTION
BRANCH MANAGER
DESIGN DIRECTOR

GEE & JENSON
Engineers • Architects • Planners, Inc.
Florida 33445 – EB 0002234 – AA 0200666

A/E CONTRACT NO. 89-62-5-0001

ACTIVITY – SATISFACTORY TO
APPROVED
DATE
APPROVED
FOR EFD COMMANDER HVAC

DEPARTMENT OF THE NAVY
NAVAL FACILITIES ENGINEERING COMMAND
ATLANTIC DIVISION
NORFOLK, VIRGINIA
NAVAL STATION
U.S. NAVAL STATION
GUANTANAMO BAY, CUBA
OILY WASTE/WASTE OIL COLLECTION
PIER A AND WHARVES B, T, AND U
SITE PLAN

CODE ID. NO. 80091	SIZE D
SCALE:	
EFD NO.	
STA. PROJ. NO.	
SPEC. NO. 05-00-4505	
CONSTR. CONTR. NO. N62470-00-C-4505	
NAVFAC DRAWING NO. 4407612	
SHEET S-2	OF

8805S002
DRAWFORM REVISION 25 SEPT 96

M:\Elec\8805S002.DWG Last Update: 8/7/2000 Plotted: 8/8/2000 1:40 pm By: Shewman Plot Scale: 1=60.0 Xref Dwg's:

REVDATE

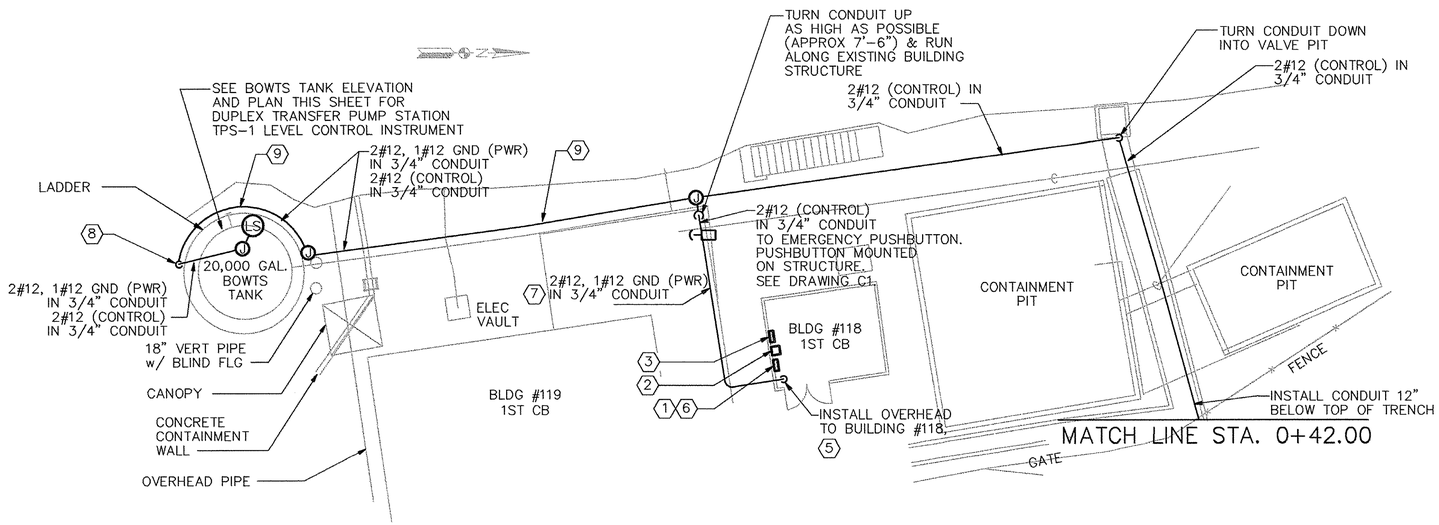

SITE PLAN BOWTS AREA

SCALE: 1" = 10'

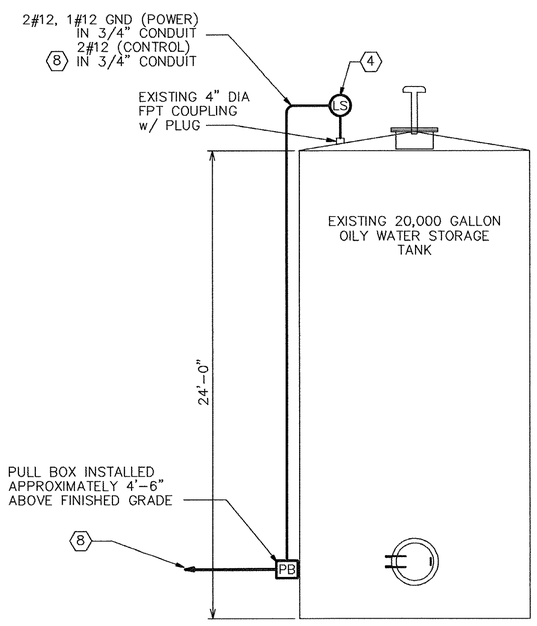

BOWTS TANK ELEVATION

NOT TO SCALE

EXISTING STORAGE TANK LEVEL INSTRUMENT FITTINGS				
	ITEM	QTY	NAME	DESCRIPTION
	1	1	VENT	3" DIA FPT COUPLING
	2	1	MANHOLE	24" DIA MANHOLE w/ LONG BOLT & COVER
*	3	1	SPARE	4" DIA FPT COUPLING w/ PLUG
	4	2	BOLT FLANGE	3" DIA SLIP-ON FLANGE/LEVEL INSTRUMENT
	5	1	COUPLING	1" DIA FULL COUPLING/LEVEL INSTRUMENT
	6	1	COUPLING	1" DIA FULL COUPLING/SPARE

* SEE KEYED NOTE 4

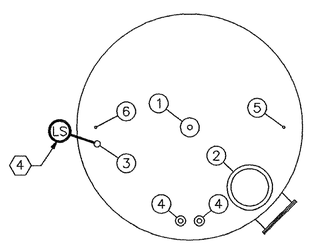

BOWTS TANK PLAN

NOT TO SCALE

GENERAL NOTES:

1. THE FOLLOWING AREAS SHALL BE CONSIDERED AS HAZARDOUS AREAS AND ALL ELECTRICAL WORK IN THESE AREAS SHALL COMPLY WITH THE REQUIREMENTS OF ARTICLES 500 AND 501 OF THE NATIONAL ELECTRICAL CODE FOR CLASS 1, DIVISION 1, GROUPS C & D AREAS: BOWTS AREA, 20,000 GALLON BOWTS TANK, BUILDING #118 AND PIPE TRENCH.
2. THESE PLANS SHOW THE ROUTING AND ELEVATIONS OF CONDUITS TO BE INSTALLED IN THE EXSITING PIPE TRENCH. HOWEVER, BEFORE INSTALLING CONDUITS, COORDINATE WITH OTHER TRADES THE EXACT LOCATIONS OF PIPING, PIPE SUPPORTS AND OTHER EQUIPMENT TO BE INSTALLED IN THE TRENCH. MAKE ADJUSTMENTS IN CONDUIT ROUTING AS REQUIRED TO AVOID CONFLICTS WITH THE WORK OF OTHER TRADES.
3. NEW JUNCTION BOXES AND RECEPTACLES TO BE INSTALLED IN EXISTING PIPING TRENCH SHALL BE ACCESSIBLE PER THE NATIONAL ELECTRICAL CODE.

KEYED NOTES

1. EXISTING CROUSE-HINDS D2L SERIES, CLASS 1, DIVISION 2, GROUP C & D, 208Y/120 VOLTS, 3 PHASE, 4 WIRE, 40 CIRCUIT, 100 AMP POWER PANEL. ENCLOSURE #D2LC, CAT No. D2LC324G-01330-03315-06120-02120G-04115-3M100-1-5752.
2. EXISTING DRY-TYPE TRANSFORMER, 480 VOLTS-208Y/120 VOLTS, 3 PHASE, 45-kVA.
3. EXISTING CROUSE-HINDS D2D SERIES, NEMA TYPE 4, CLASS 1, DIVISION 2, GROUP C & D, 480Y/277 VOLTS, 3 PHASE, 4 WIRE, 30 CIRCUIT, 100 AMP POWER PANEL.
4. PROVIDE FLOAT SWITCH LEVEL INSTRUMENT INCLUDING ALL INSTALLATION HARDWARE TO INSTALL NEW INSTRUMENT ON EXISTING 4" DIAMETER FPT FITTING.
5. TURN 120 VOLT POWER SUPPLY CONDUIT DOWN TO EXISTING CROUSE-HINDS CLASS 1, DIVISION 1, JUNCTION BOX BELOW 208Y/120 VOLT PANELBOARD, EXTEND CONDUCTORS UP THROUGH EXISTING NIPPLES FROM JUNCTION BOX TO NEW CIRCUIT BREAKER IN PANELBOARD.
6. PROVIDE 20 AMP, SINGLE POLE CIRCUIT BREAKER IN PANELBOARD SPACE #20 (EXISTING SPACE) FOR BOWTS TANK FLOAT SWITCH LEVEL INSTRUMENT.
7. PROVIDE 2#12, 1#12 GND (POWER) IN 3/4" CONDUIT FROM EXISTING 208Y/120V PANELBOARD IN BUILDING #118 TO NEW FLOAT SWITCH LEVEL INSTRUMENT ON TOP OF EXISTING BOWTS TANK. CONDUIT SHALL BE INSTALLED ALONG ROUTE INDICATED.
8. TURN LEVEL SENSING CONTROL CONDUIT DOWN SIDE OF TANK ON EXISTING CONDUIT SUPPORTS. EXISTING SUPPORTS ARE LIGHT WEIGHT CHANNEL. PROVIDE 2#12, 1#12 GND (POWER) IN 3/4" CONDUIT & 2#12 (CONTROL) IN 3/4" CONDUIT. FROM LEVEL INSTRUMENT TO OUTSIDE OF BUILDING 118. CONTROL WIRING SHALL CONTINUE ON IN 3/4" CONDUIT AS JUNCTION BOX INDICATED TO DUPLEX TRANSFER PUMP STATION #1.
9. INSTALL CONDUIT ALONG CONCRETE BASE OF TANK AND THEN TURN UP AND INSTALL PARALLEL WITH NEW 6" TPFM PIPING SHOWN ON CIVIL DRAWINGS.

LEGEND

- LS FLOAT SWITCH SENSING UNIT
- J JUNCTION BOX
- PB PULL BOX
- PANEL, TYPE AS INDICATED
- M MOTOR
- EMERGENCY PUSHBUTTON.

ABBREVIATIONS

A,AMP	AMPERE
BFG	BELOW FINISHED GRADE
BLDG	BUILDING
C	CONDUIT
CKT	CIRCUIT
D	DEEP
DIA	DIAMETER
DWG	DRAWING
FPT	FEMALE PIPE THREADS
GND	GROUND
H	HIGH
HP	HORSEPOWER
OW/WO	OILY WASTE/WASTE OIL
P	POLE
PH	PHASE
PWR	POWER
RMS	ROOT MEANS SQUARED
SP	SUMP PUMP
SPFM	SUMP PUMP FORCE MAIN
SYM	SYMETRICAL
TPFM	TRANSFER PUMP FORCE MAIN
TPS	TRANSFER PUMP STATION
V	VOLTS
W	WIDTH, WIRE
W/	WITH
3/C	3-CONDUCTOR

IF THIS DRAWING IS A REDUCTION, GRAPHIC SCALE MUST BE USED

1"=10' 0' 10' 20' 30' 40' 50'

REVISIONS				
SYM.	DESCRIPTION	DATE	APPROVED	

A/E DESIGN L.L.S. DRAWN L.M.K. REVIEW OC CHIEF ARCH/ ENGR. PROJECT MANAGER FIRE PROTECTION BRANCH MANAGER DESIGN DIRECTOR

GEE & JENSON Engineers·Architects·Planners, Inc. Gee & Jenson Building, 1000 Gee Way, Orlando, Florida 32805 — EB 000254 — AA 0000044

A/E CONTRACT NO. 39-D-5091 APPROVED DATE

ACTIVITY - SATISFACTORY TO APPROVED DATE 18 Aug 00

FOR BID USE DRAWINGS SHALL

SEAL

DEPARTMENT OF THE NAVY NAVAL STATION ATLANTIC DIVISION NAVAL FACILITIES ENGINEERING COMMAND NORFOLK, VIRGINIA

U.S. NAVAL STATION GUANTANAMO BAY, CUBA

OILY WASTE/WASTE OIL COLLECTION PIER A AND WHARVES B, T, AND U

BOWTS AREA - ELECTRICAL SITE PLAN

CODE ID. NO. 80091	SIZE D
SCALE:	
EFD NO.	
STA. PROJ. NO.	
SPEC. NO. 05-00-4505	
CONSTR. CONTR. NO. N62470-00-C-4505	
NAVFAC DRAWING NO. 4407613	
SHEET E-1	OF

8805e001

DRAWFORM REVISION 25 SEPT 96

B:\Elec\8805e001.dwg Last Update: 8/9/2000 Plotted: 8/9/2000 4:29 pm By: Bea Plot Scale: 1=10.0 Xref Dwg's:

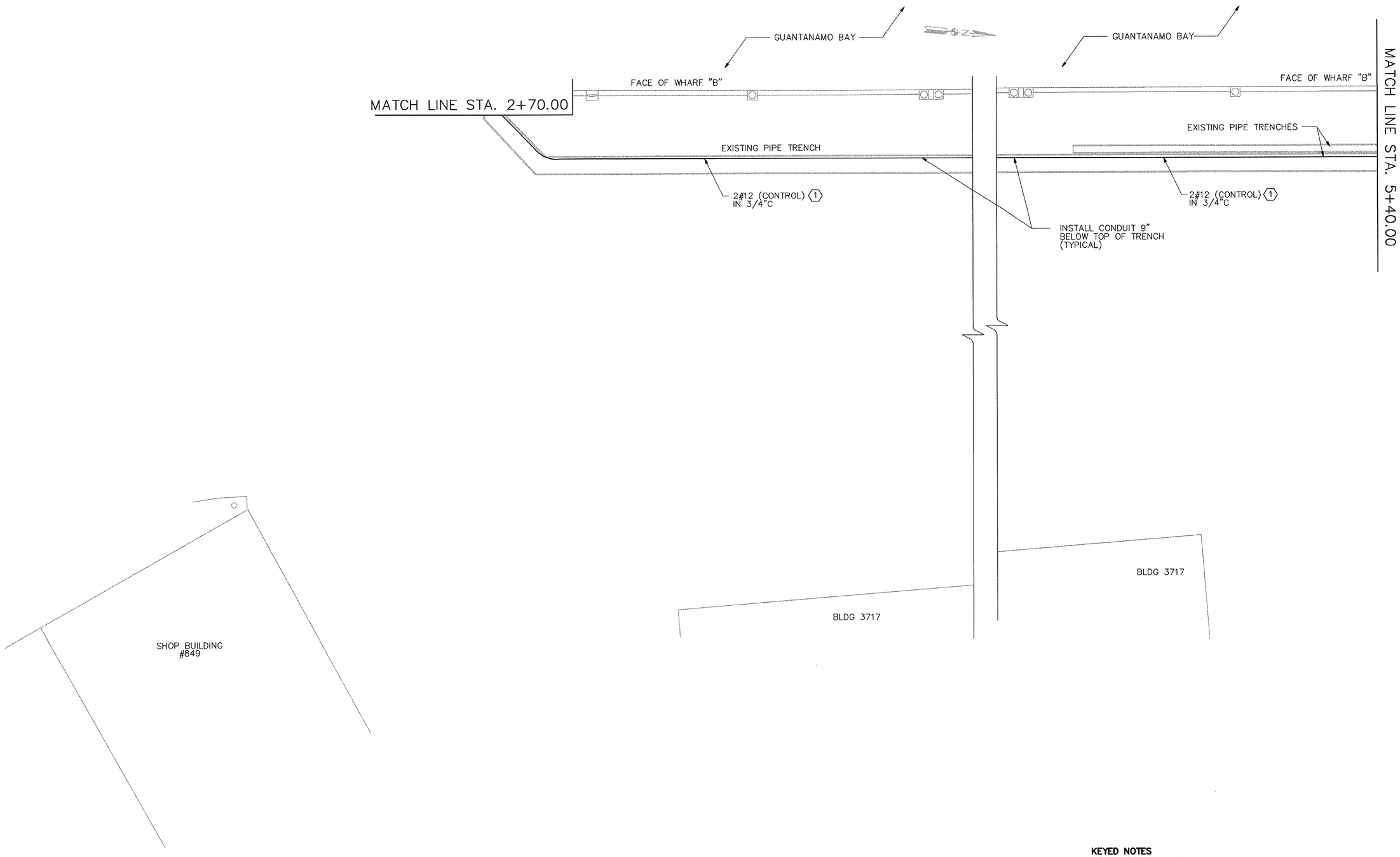

PARTIAL SITE PLAN WHARF B

SCALE: 1" = 10'

KEYED NOTES

1. FROM FLOAT SWITCH LEVEL INSTRUMENT SENSOR AT THE TOP OF BOWTS TANK TO TPS-1 CONTROL PANEL.
   SEE E-1 FOR BOWTS TANK LOCATION.
   SEE E-4 FOR LOCATION OF TPS-1 CONTROL PANEL .

IF THIS DRAWING IS A REDUCTION,
GRAPHIC SCALE MUST BE USED

1"=10' 0' 10' 20' 30' 40' 50'

REVISIONS				
SYM.	DESCRIPTION	DATE	APPROVED	

A/E DESIGN LTS DRAWN LMK REVIEW
QC CHIEF ARCH./ ENGR.
PROJECT MANAGER
FIRE PROTECTION
BRANCH MANAGER
DESIGN DIRECTOR

GEE & JENSON
Engineers • Architects • Planners, Inc.
Harbourside Place • 417 Ludlam Drive
Florida 32549 • TB 0000334 • AA 0000049

A/E CONTRACT NO. 98-D-5091 DATE
APPROVED
ACTIVITY – SATISFACTORY TO
APPROVED DATE 18 Aug 00
FOR EFD, CIVIL COMMANDER NAVFAC

SEAL

DEPARTMENT OF THE NAVY
NAVAL FACILITIES ENGINEERING COMMAND
ATLANTIC DIVISION
NAVAL STATION NORFOLK, VIRGINIA
U.S. NAVAL STATION GUANTANAMO BAY, CUBA
OILY WASTE/WASTE OIL COLLECTION
PIER A AND WHARVES B, T, AND U
STA.2+70.00 TO STA.5+40.00

CODE ID. NO. 80091	SIZE D
SCALE:	
EFD NO.	
STA. PROJ. NO.	
SPEC. NO. 05-00-4505	
CONSTR. CONTR. NO. N62470-00-C-4505	
NAVFAC DRAWING NO. 4407615	
SHEET E-3	OF

8805E003

DRAWFORM REVISION 25 SEPT 96

B:\Elec\8805E003.DWG Last Update: 8/9/2000 Plotted: 8/9/2000 4:00 pm By: Bea Plot Scale: 1=10.0 Xref Dwg's:

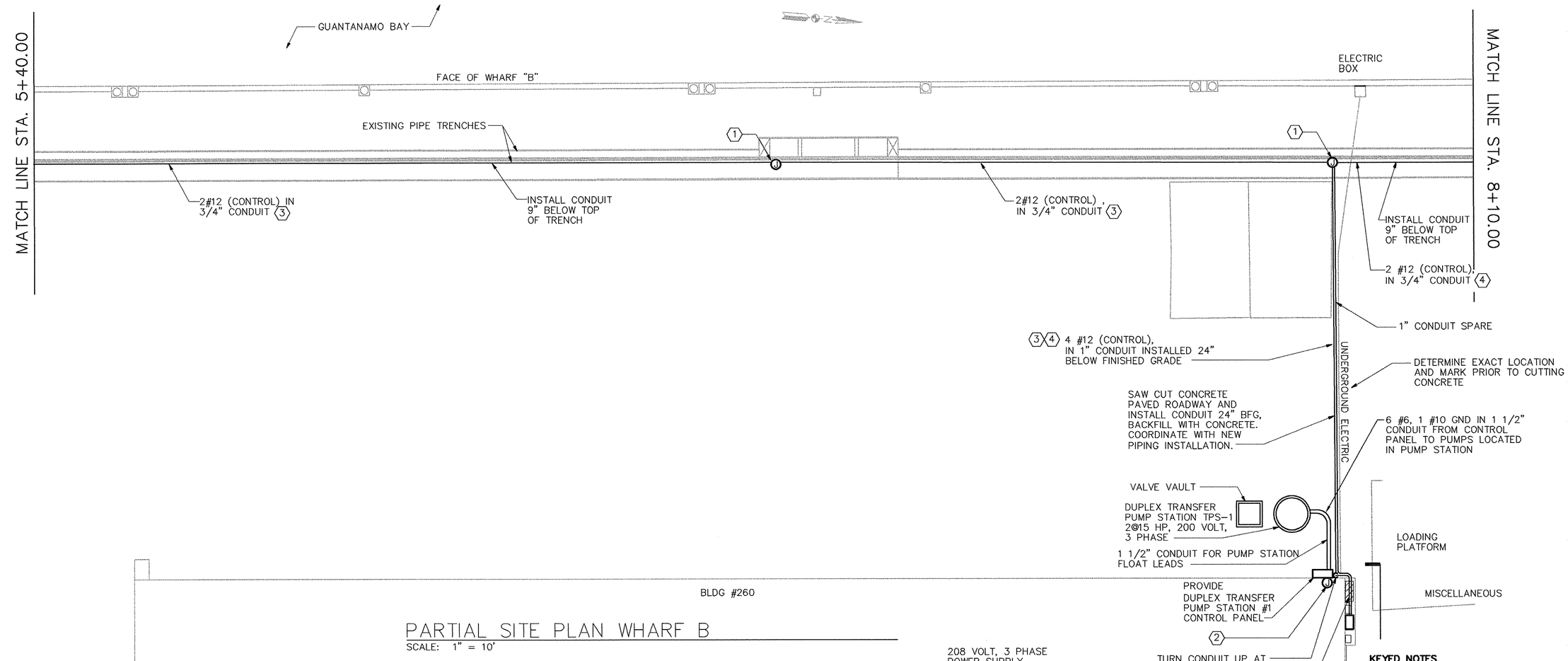

PARTIAL SITE PLAN WHARF B

SCALE: 1" = 10'

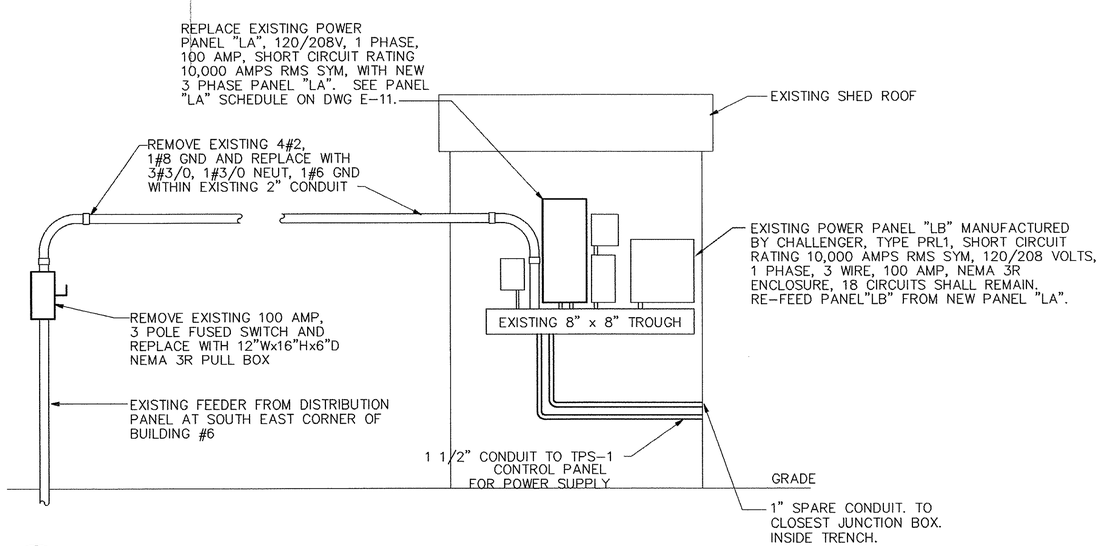

WHARF B SUMP PUMP POWER SUPPLY DETAIL

A / E4&E5 E4

NOT TO SCALE

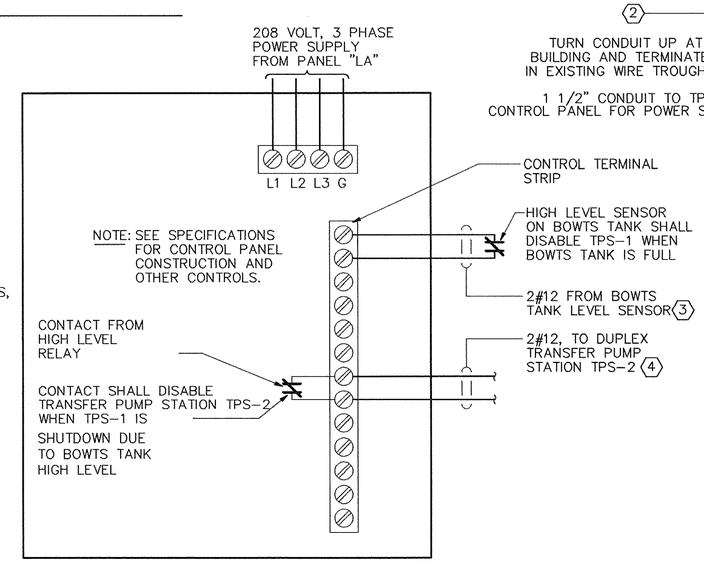

DUPLEX TRANSFER PUMP STATION TPS-1 CONTROL PANEL

NO SCALE

KEYED NOTES

1. PROVIDE CLASS 1, DIV 1, GROUPS C & D JUNCTION BOX.
2. PROVIDE 3/4" CONDUIT FROM TRANSFER PUMP STATION TPS-1 CONTROL PANEL TO WITHIN BLDG #260 FOR THE OWNER'S TELEPHONE LINE. CONDUIT SHALL BE INSTALLED OVERHEAD TO 12' ABOVE FINISHED FLOOR. PROVIDE JUNCTION BOX ON END OF CONDUIT FOR OWNER'S USE. COORDINATE LOCATION OF TELEPHONE BOARD WITH CONTRACTOR OFFICER AND RUN CONDUIT, PULL WIRE AND ONE PAIR OF TELEPHONE CABLES TO TELEPHONE BOARD.
3. FROM FLOAT SWITCH LEVEL INSTRUMENT SENSOR AT THE TOP OF BOWTS TANK TO TPS-1 CONTROL PANEL. SEE DWG. E-1 FOR BOWTS TANK LOCATION.
4. 2#12 FROM TPS-1 CONTROL PANEL TO TPS-2 CONTROL PANEL.

A / E4 E4

IF THIS DRAWING IS A REDUCTION, GRAPHIC SCALE MUST BE USED

1"=10' 0' 10' 20' 30' 40' 50'

SYM.	DESCRIPTION	DATE	APPROVED
	REVISIONS		

EFD
A/E
J.L.B. DESIGN
J.L.S. DRAWN
J.M.K. REVIEW
CHIEF ARCH/ ENGR.
QC
PROJECT MANAGER
FIRE PROTECTION
BRANCH MANAGER
DESIGN DIRECTOR

GEE & JENSON
ENGINEERS-ARCHITECTS-PLANNERS, INC.
PROPRIETARY, CIVIL & WEST PALM BEACH
FLORIDA • NEW ORLEANS • LA • DENVER • CO

A/E CONTRACT NO. 92-D-5091
APPROVED
ACTIVITY – SATISFACTORY TO
APPROVED
DATE
FOR EFD FOR COMMANDER NAVFAC

SEAL

DEPARTMENT OF THE NAVY
NAVAL STATION
NAVAL FACILITIES ENGINEERING COMMAND
ATLANTIC DIVISION
NORFOLK, VIRGINIA

U.S. NAVAL STATION GUANTANAMO BAY, CUBA
OILY WASTE/WASTE OIL COLLECTION
PIER A AND WHARVES B, T, AND U
STA.5+40.00 TO STA.8+10.00

CODE ID. NO. 80091 | SIZE D
SCALE:
EFD NO.
STA. PROJ. NO.
SPEC. NO. 05-00-4505
CONSTR. CONTR. NO. N62470-00-C-4505
NAVFAC DRAWING NO. 4407616
SHEET OF
E-4

8805E004
DRAWFORM REVISION 25 SEPT 96

M:\Elec\8805E004.DWG Last Update: 8/9/2000 Plotted: 8/9/2000 1:40 pm By: Shewman Plot Scale: 1=10.0 Xref Dwg's:

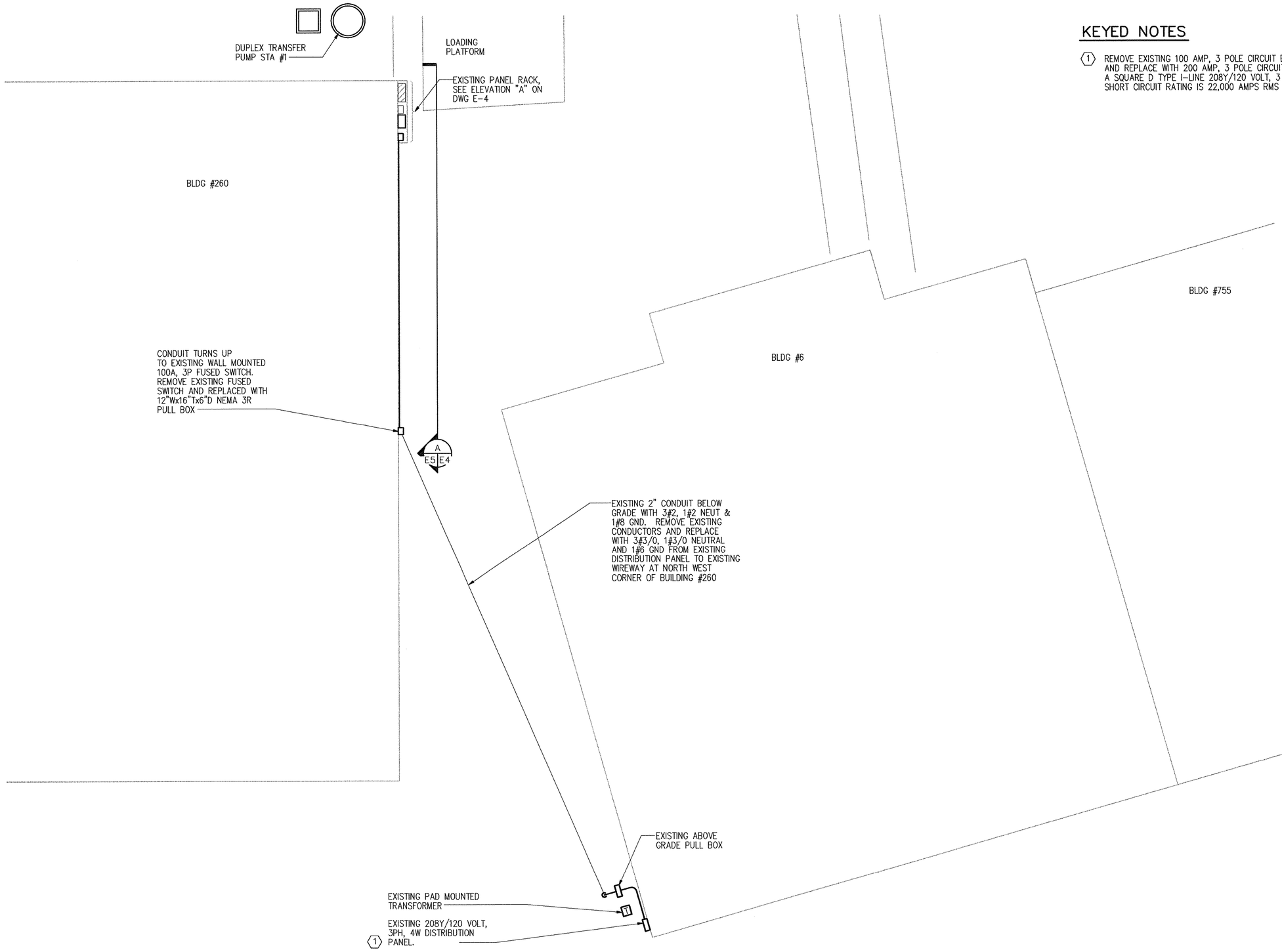

KEYED NOTES

1. REMOVE EXISTING 100 AMP, 3 POLE CIRCUIT BREAKER LOCATED IN SPACE #1 AND REPLACE WITH 200 AMP, 3 POLE CIRCUIT BREAKER. EXISTING PANEL IS A SQUARE D TYPE I-LINE 208Y/120 VOLT, 3 PHASE, 4 WIRE PANEL. PANEL SHORT CIRCUIT RATING IS 22,000 AMPS RMS SYM.

PARTIAL SITE PLAN BUILDINGS #260, #6 AND #755

SCALE: 1" = 10'

IF THIS DRAWING IS A REDUCTION, GRAPHIC SCALE MUST BE USED

1"=10' 0' 10' 20' 30' 40' 50'

SYM.	DESCRIPTION	DATE	APPROVED
	REVISIONS		

A/E DESIGN LLS DRAWN LMK REVIEW

QC CHIEF ARCH/ ENGR. PROJECT MANAGER FIRE PROTECTION BRANCH MANAGER DESIGN DIRECTOR

GEE & JENSON Engineers • Architects • Planners, Inc.
Norfolk, Virginia 23510 • Tel 757-625-3000 • Fax 625-3001
Tallahassee, Florida 32303 • Tel 850-222-5702 • Fax 222-8265

A/E CONTRACT NO. 83-D-5031 DATE

APPROVED

ACTIVITY – SATISFACTORY TO DATE

APPROVED

FOR EFD FOR COMMANDER NAVFAC

DEPARTMENT OF THE NAVY
NAVAL FACILITIES ENGINEERING COMMAND
ATLANTIC DIVISION
NORFOLK, VIRGINIA
NAVAL STATION
U.S. NAVAL STATION
GUANTANAMO BAY, CUBA
OILY WASTE/WASTE OIL COLLECTION
PIER A AND WHARVES B, T, AND U
PARTIAL SITE PLAN BLDG #260,#6,&#755-ELEC

CODE ID. NO. 80091	SIZE D
SCALE:	
EFD NO.	
STA. PROJ. NO.	
SPEC. NO. 05-00-4505	
CONSTR. CONTR. NO. N62470-00-C-4505	
NAVFAC DRAWING NO. 4407617	
SHEET E-5	OF

8805E005

DRAWFORM REVISION 25 SEPT 96

M:\Elec\8805E005.DWG Last Update: 8/9/2000 Plotted: 8/9/2000 1:40 pm By: Shewman Plot Scale: 1=10.0 Xref Dwg's:

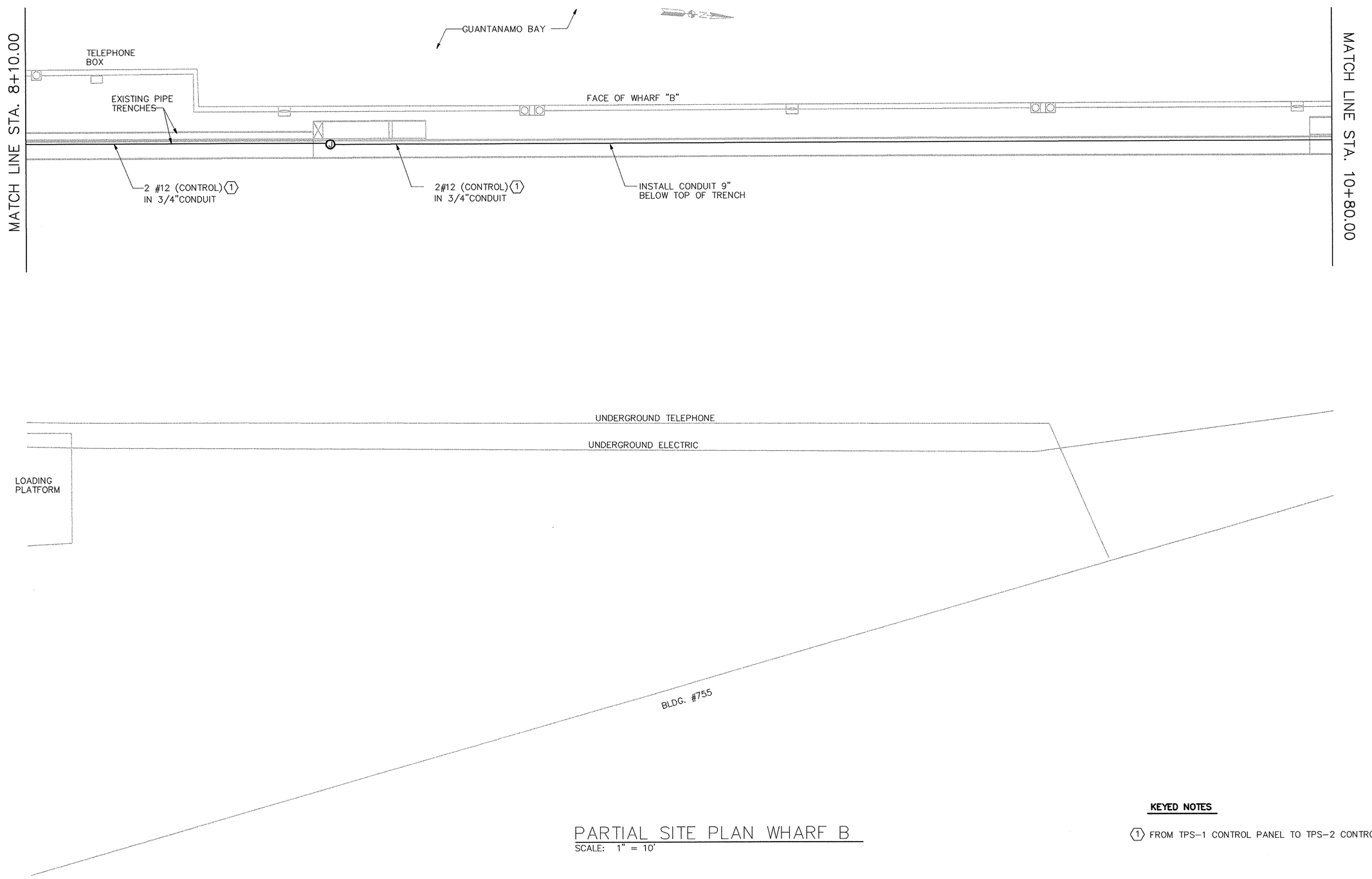

PARTIAL SITE PLAN WHARF B

SCALE: 1" = 10'

KEYED NOTES

1. FROM TPS-1 CONTROL PANEL TO TPS-2 CONTROL PANEL.

IF THIS DRAWING IS A REDUCTION, GRAPHIC SCALE MUST BE USED

1"=10' 0' 10' 20' 30' 40' 50'

REVISIONS			
STAL	DESCRIPTION	DATE	APPROVED

A/E DESIGN LMB DRAWN LMB CHECKED LMB

CHIEF ARCH./ ENGR.

PROJECT MANAGER

FIRE PROTECTION

BRANCH MANAGER

DESIGN DIRECTOR

GEE & JENSON Engineers • Architects • Planners, Inc.
TAMPA, FLORIDA • ORLANDO • WEST PALM BEACH • FT. LAUDERDALE

A/E CONTRACT NO. 99-D-5091

APPROVED DATE

ACTIVITY - SATISFACTORY TO

APPROVED DATE

FOR BID FOR SUBMITTER SAFAC

STATE OF FLORIDA LICENSED PROFESSIONAL ENGINEER No. 48637 W. KHALIL

DEPARTMENT OF THE NAVY NAVAL FACILITIES ENGINEERING COMMAND

NAVAL STATION ATLANTIC DIVISION NORFOLK, VIRGINIA

U.S. NAVAL STATION GUANTANAMO BAY, CUBA

OILY WASTE/WASTE OIL COLLECTION

PIER A AND WHARVES B, T, AND U

STA.8+10.00 TO STA.10+80.00

CODE ID. NO. 80091	SIZE D
SCALE:	
EFD NO.	
STA. PROJ. NO.	
SPEC. NO. 05-00-4505	
CONSTR. CONTR. NO. N62470-00-C-4505	
NAVFAC DRAWING NO. 4407618	
SHEET E-6	OF

8805E006

DRAWFORM REVISION 25 SEPT 96

B:\Elec\8805E006.DWG Last Update: 8/9/2000 Plotted: 8/9/2000 4:01 pm By: Bea Plot Scale: 1=10.0 Xref Dwg's:

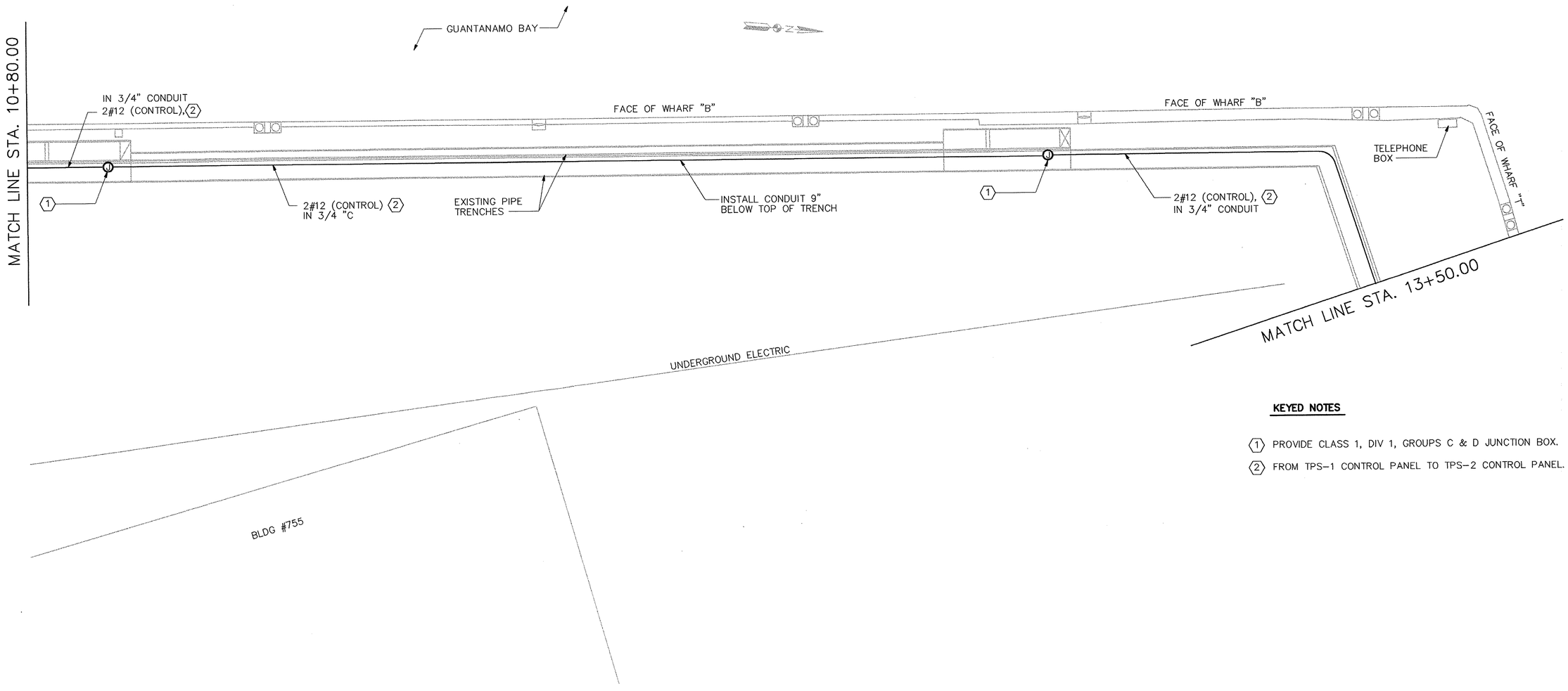

PARTIAL SITE PLAN WHARF B

SCALE: 1" = 10'

KEYED NOTES

1. PROVIDE CLASS 1, DIV 1, GROUPS C & D JUNCTION BOX.
2. FROM TPS-1 CONTROL PANEL TO TPS-2 CONTROL PANEL.

IF THIS DRAWING IS A REDUCTION, GRAPHIC SCALE MUST BE USED

1"=10' 0' 10' 20' 30' 40' 50'

REVISIONS			
REV	DESCRIPTION	DATE	APPROVED

A/E: GEE & JENSON Engineers-Architects-Planners, Inc. 750 Main Street, Norfolk, Virginia 23510-2611 Fax Number (757) 625-3000

A/E CONTRACT NO. 99-D-5091

DESIGN: L.L.B. DRAWN: L.J.S. REVIEW: L.M.K. QC: ARCH / ENGR: PROJECT MANAGER: FIRE PROTECTION: BRANCH MANAGER: DESIGN DIRECTOR:

ACTIVITY - SATISFACTORY TO: APPROVED: DATE: 10/20/00

FOR EFD USE COMMANDER NAVFAC

DEPARTMENT OF THE NAVY — NAVAL FACILITIES ENGINEERING COMMAND — ATLANTIC DIVISION — NORFOLK, VIRGINIA

NAVAL STATION — U.S. NAVAL STATION GUANTANAMO BAY, CUBA

OILY WASTE/WASTE OIL COLLECTION PIER A AND WHARVES B, T, AND U

STA.10+80.00 TO STA.13+50.00

CODE ID. NO. 80091	SIZE D
SCALE:	
EFD NO.	
STA. PROJ. NO.	
SPEC. NO. 05-00-4505	
CONSTR. CONTR. NO. N62470-00-C-4505	
NAVFAC DRAWING NO. 4407619	
SHEET	OF
E-7	

8805E007

DRAWFORM REVISION 25 SEPT. 98

M:\Elec\8805E007.DWG Last Update: 8/7/2000 Plotted: 8/9/2000 1:40 pm By: Shewman Plot Scale: 1=10.0 Xref Dwg's:

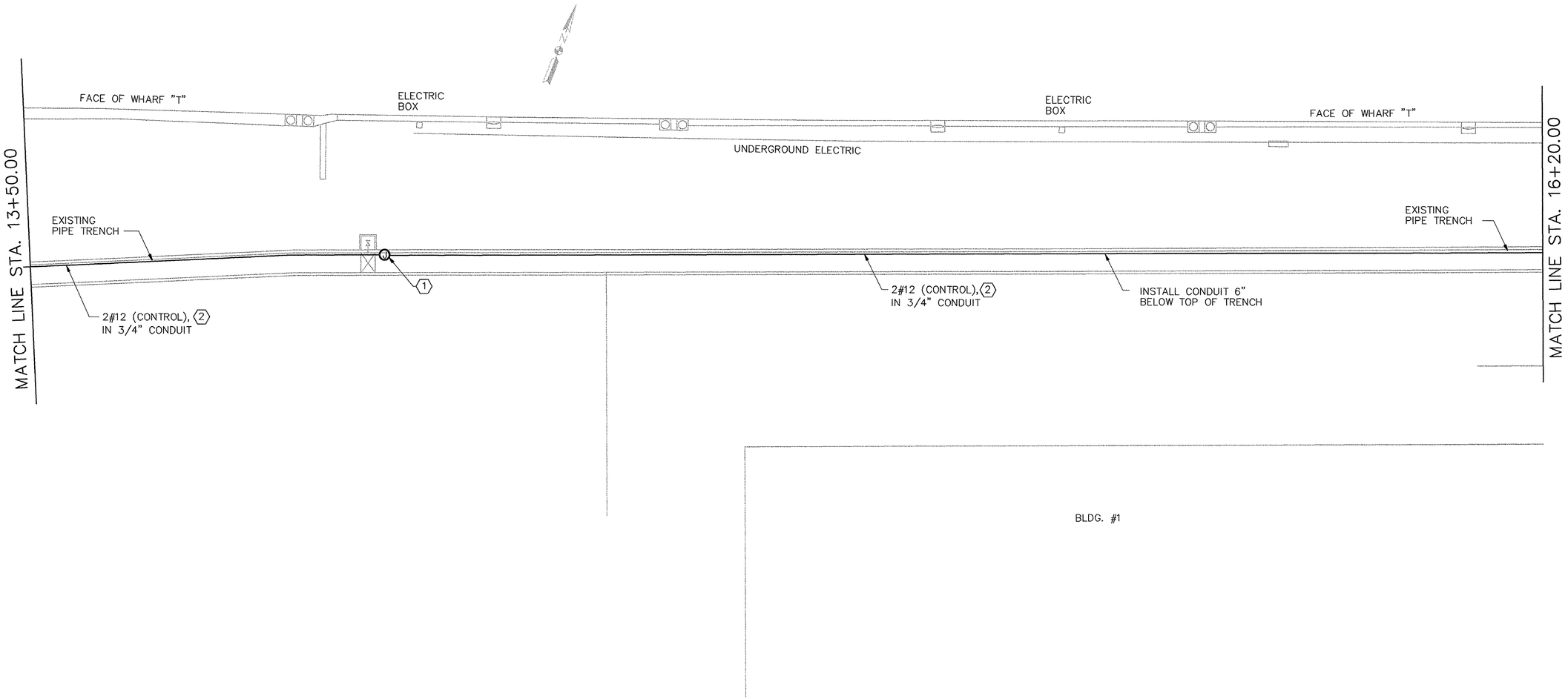

PARTIAL SITE PLAN WHARF T

SCALE: 1" = 10'

KEYED NOTES

1. PROVIDE CLASS 1, DIV 1, GROUPS C & D JUNCTION BOX.
2. FROM TPS-1 CONTROL PANEL TO TPS-2 CONTROL PANEL.

IF THIS DRAWING IS A REDUCTION, GRAPHIC SCALE MUST BE USED

1"=10' 0' 10' 20' 30' 40' 50'

REVISIONS

SYM.	DESCRIPTION	DATE	APPROVED

A/E: J.T.B. DESIGN; J.T.S. DRAWN; J.M.K. REVIEW; OC CHIEF ARCH/ ENGR.; PROJECT MANAGER; FIRE PROTECTION; BRANCH MANAGER; DESIGN DIRECTOR

GEE & JENSON
Engineers • Architects • Planners, Inc.
Norfolk, Virginia 23502
A/E CONTRACT NO. 92-D-5091 - VA 000664 - VA 000665

APPROVED ACTIVITY – SATISFACTORY TO DATE
APPROVED DATE
FOR BID FOR COMMANDER NAVFAC

DEPARTMENT OF THE NAVY
NAVAL STATION
NAVAL FACILITIES ENGINEERING COMMAND
ATLANTIC DIVISION
NORFOLK, VIRGINIA

U.S. NAVAL STATION GUANTANAMO BAY, CUBA
OILY WASTE/WASTE OIL COLLECTION
PIER A AND WHARVES B, T, AND U
STA.13+50.00 TO STA.16+20.00

CODE ID. NO. 80091 SIZE D
SCALE:
EFD NO.
STA. PROJ. NO.
SPEC. NO. 05-00-4505
CONSTR. CONTR. NO. N62470-00-C-4505
NAVFAC DRAWING NO. 4407620
SHEET OF
E-8

8805E008
DRAWFORM REVISION 25 SEPT 96

M:\Elec\8805E008.DWG Last Update: 8/9/2000 Plotted: 8/9/2000 1:40 pm By: Sherman Plot Scale: 1=10.0 Xref Dwg's:

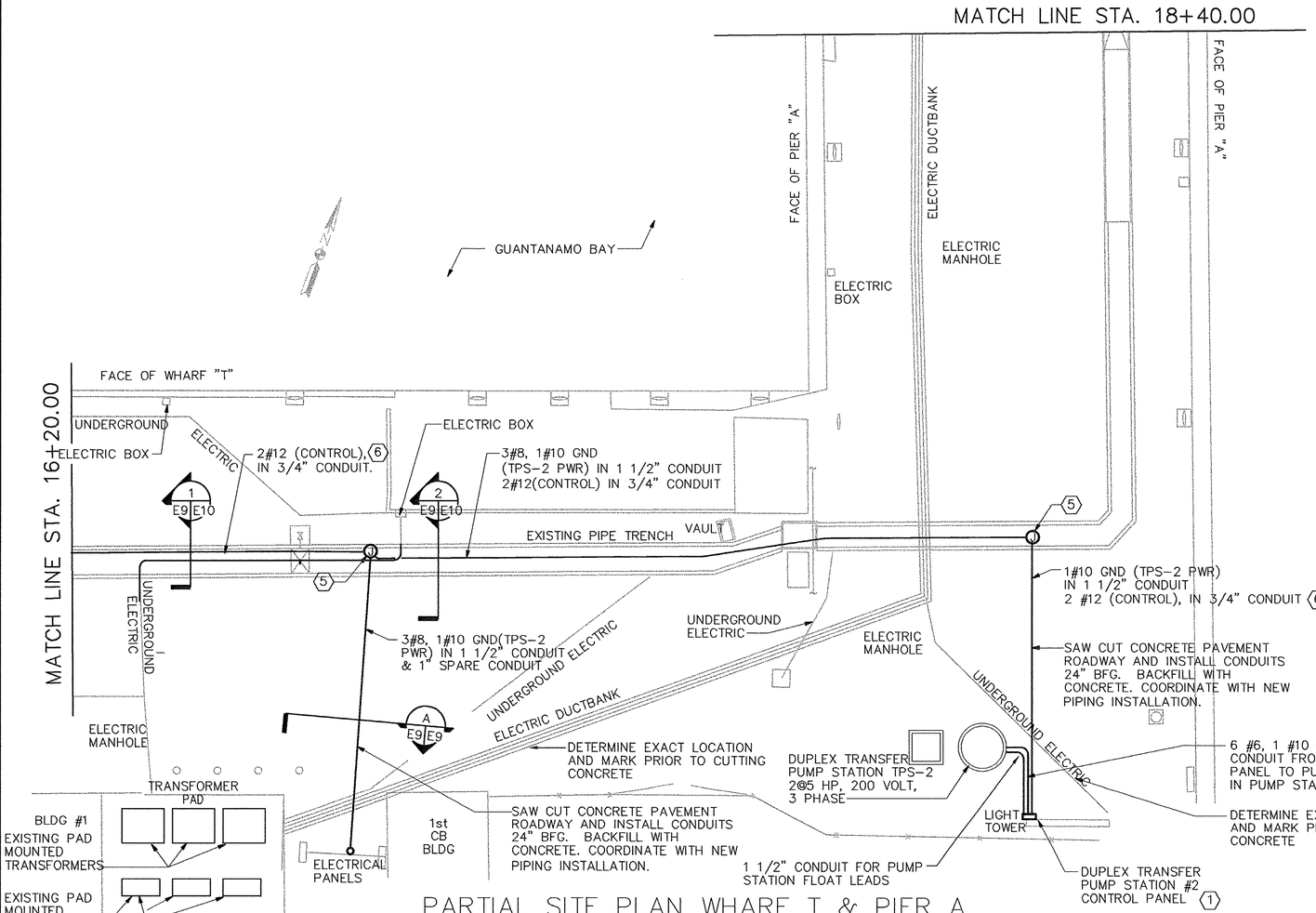

PARTIAL SITE PLAN WHARF T & PIER A

SCALE: 1" = 10'

KEYED NOTES

1. INSTALL DUPLEX TRANSFER PUMP STATION TPS-2 CONTROL PANEL ON EXISTING LIGHT TOWER LEG. INSTALL 5' ABOVE FINISHED GRADE TO CENTER OF CONTROL PANEL.
2. REMOVE EXISTING 150 AMP, 3 POLE CIRCUIT BREAKER #2 WHICH FEEDS ADJACENT DISCONNECT RACK AND REPLACE WITH 200 AMP, 3 POLE CIRCUIT BREAKER. EXISTING PANEL IS SQUARE D, I-LINE TYPE HCW, SHORT CIRCUIT RATING 22,000 AMPS RMS SYM, SQUARE D #122980255AZO, 208Y/120 VOLT, 3 PHASE, 4 WIRE NEMA 3R PAD MOUNTED.
3. REMOVE EXISTING 3#1/0, 1#1/0 NEUTRAL AND 1#6 GROUND WITHIN 2" CONDUIT FROM 208Y/120 VOLT DISTRIBUTION PANEL TO ADJACENT DISCONNECT RACK AND PROVIDE 3#3/0, 1#3/0 NEUTRAL AND 1#6 GROUND WITHIN EXISTING 2" CONDUIT. RECONNECT IN WIREWAY SAME AS EXISTING. PROVIDE 3#3/0, 1#3/0 NEUTRAL, 1#6 GROUND FROM WIREWAY TAP TO MAIN BREAKER IN NEW PANEL "PA".
4. NOT USED.
5. PROVIDE CLASS 1, DIV 1, GROUPS C & D JUNCTION BOX.
6. FROM TO TPS-1 CONTROL PANEL, TO TPS-2 CONTROL PANEL.

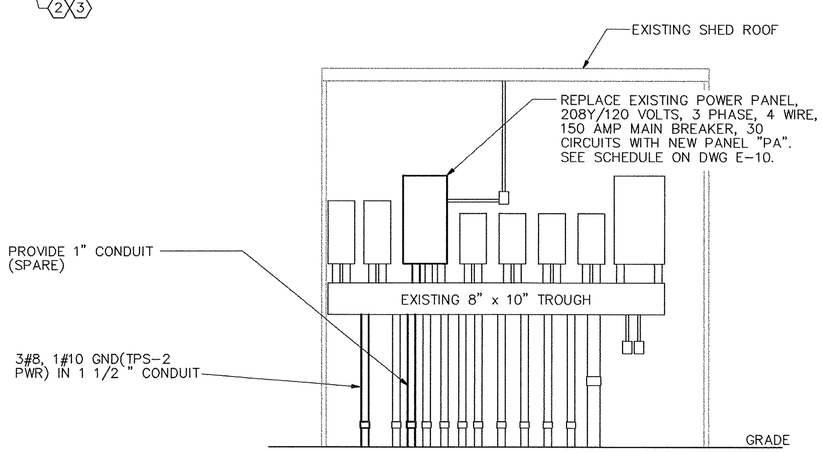

A E9 E9 PIER A & WHARF T SUMP PUMP POWER SUPPLY DETAIL

NOT TO SCALE

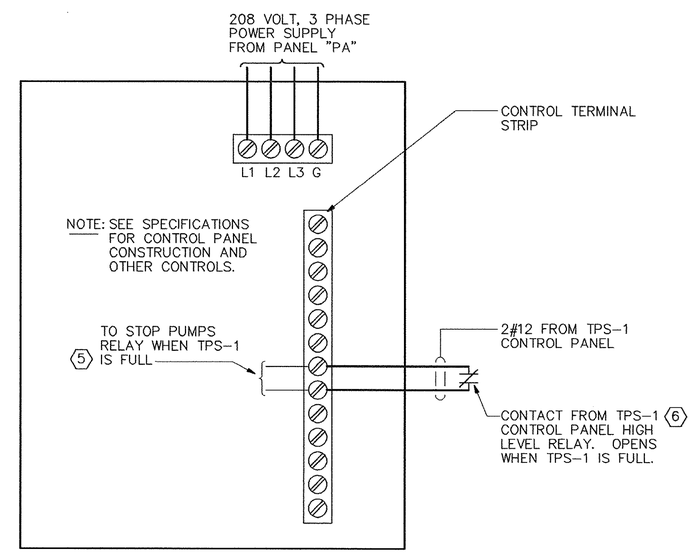

DUPLEX TRANSFER PUMP STATION TPS-2 CONTROL PANEL

NO SCALE

IF THIS DRAWING IS A REDUCTION, GRAPHIC SCALE MUST BE USED

1"=10' 0' 10' 20' 30' 40' 50'

REVISIONS			
SYM.	DESCRIPTION	DATE	APPROVED

A/E DESIGN LTS DRAWN LMK REVIEW

CHIEF ARCH/ ENGR. OC PROJECT MANAGER FIRE PROTECTION BRANCH MANAGER DESIGN DIRECTOR

GEE & JENSON ENGINEERS-ARCHITECTS-PLANNERS, INC. 650 CENTURY POINT, LAKE MARY, FL 32746 (407) 833-3000 FAX (407) 833-3000 CERTIFICATE OF AUTHORIZATION NO. 00000668

A/E CONTRACT NO. 93-C-5091 DATE

APPROVED

ACTIVITY - SATISFACTORY TO DATE

APPROVED FOR COMMANDER NAVFAC

FOR RFD FOR COMMANDER NAVFAC

DEPARTMENT OF THE NAVY NAVAL STATION NORFOLK, VIRGINIA

NAVAL FACILITIES ENGINEERING COMMAND ATLANTIC DIVISION

U.S. NAVAL STATION GUANTANAMO BAY, CUBA

OILY WASTE/WASTE OIL COLLECTION PIER A AND WHARVES B, T, AND U

STA.16+20.00 TO STA.18+40.00

CODE ID. NO. 80091	SIZE D
SCALE:	
EFD NO.	
STA. PROJ. NO.	
SPEC. NO. 05-00-4505	
CONSTR. CONTR. NO. N62470-00-C-4505	
NAVFAC DRAWING NO. 4407621	
SHEET E-9	OF

8805E009

DRAWFORM REVISION 25 SEPT 96

REVDATE

M:\Elec\8805E009.DWG Last Update: 8/7/2000 Plotted: 8/8/2000 1:40 pm By: Sherman Plot Scale: 1=10.0 Xref Dwg's:

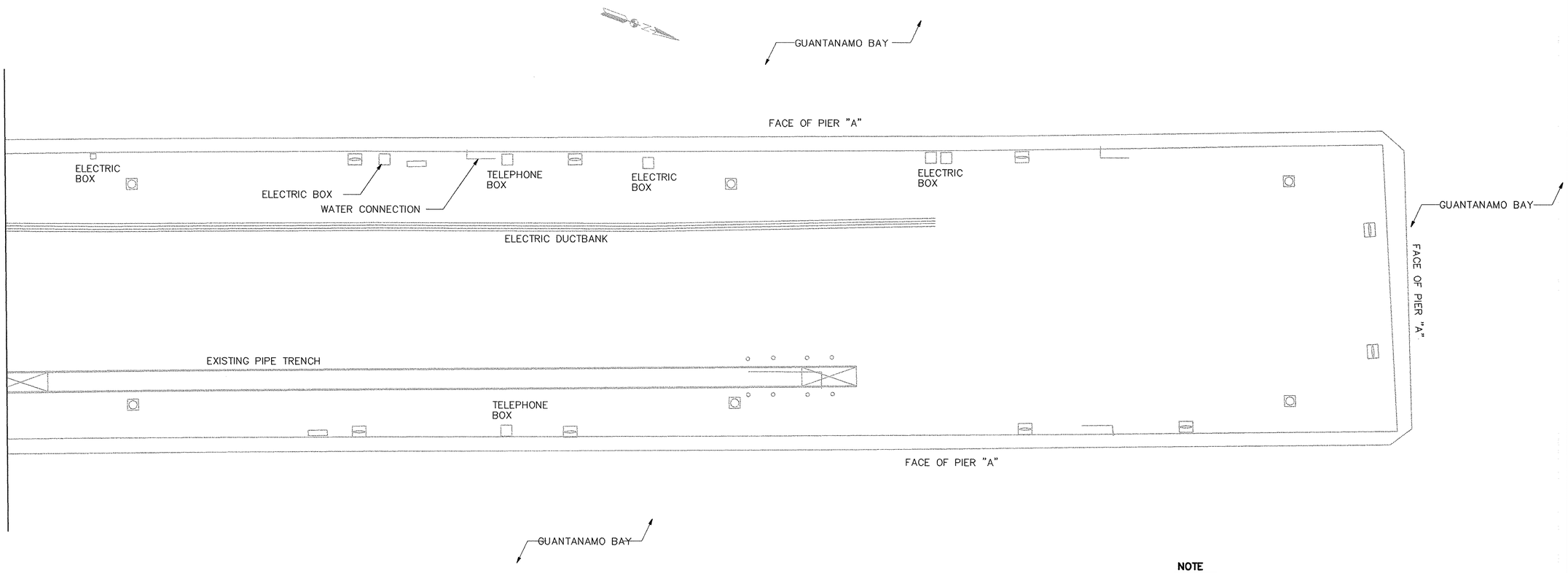

PARTIAL SITE PLAN PIER A

SCALE: 1" = 10'

NOTE

1. PARTIAL SITE PLAN PIER A HAS NO CURRENTLY ELECTRICAL WORK. SHOWN FOR REFERENCE ONLY.

KEYED NOTES

(1) REMOVE EXISTING 3" GALVANIZED RIGID STEEL CONDUIT AS INDICATED AND PROVIDE NEW 3" CONDUIT AS INDICATED. THE EXISTING CONDUIT CONTAINS THE FOLLOWING CONDUCTORS:
3 – #3/0 TYPE THW COPPER
2 – #1 THW COPPER
2 – #2 THW COPPER
3 – #8 THHN COPPER
1 – #6 THHN COPPER GROUND
2 – #10 THW COPPER
PROVIDE NEW CONDUCTORS FROM MANHOLE TO EXIST ELECTRICAL BOX ALONG WHARF T. SPLICE TO EXISTING CONDUCTORS IN THE MANHOLE AND ELECTRICAL BOX.

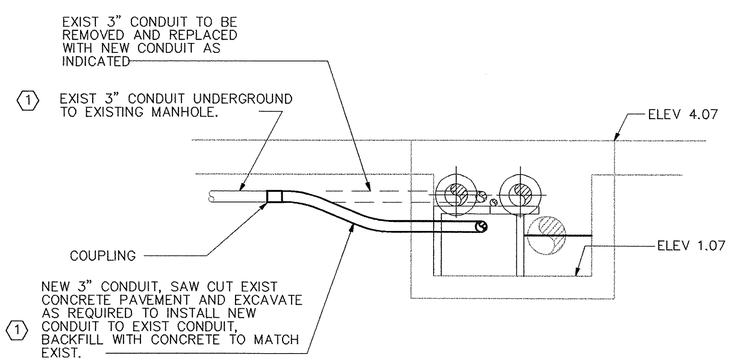

1 E9 E10 SECTION

NOT TO SCALE

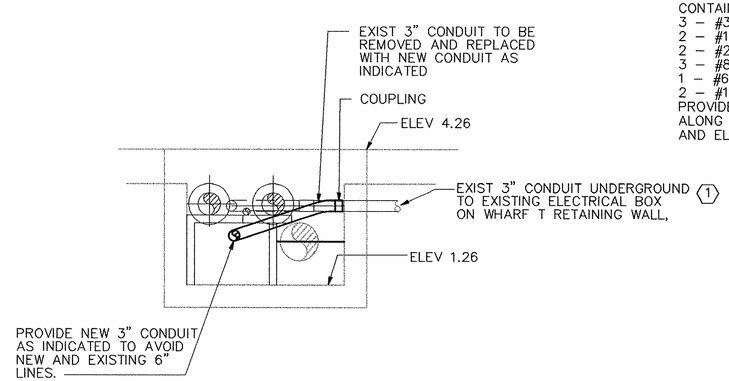

2 E9 E10 SECTION

NOT TO SCALE

IF THIS DRAWING IS A REDUCTION, GRAPHIC SCALE MUST BE USED

1"=10' 0' 10' 20' 30' 40' 50'

NO.	DESCRIPTION	DATE	APPROVED

REVISIONS

A/E CONTRACT NO. 62-92-D-0031 — GEE & JENSON Engineers • Architects • Planners, Inc. Orlando, Florida 32801 • EB 0003334 • AA C000666

APPROVED — ACTIVITY – SATISFACTORY TO — DATE

APPROVED — FOR KFD FOR COMMANDER NAVFAC — DATE 19 Aug 00

DEPARTMENT OF THE NAVY — NAVAL FACILITIES ENGINEERING COMMAND — ATLANTIC DIVISION — NORFOLK, VIRGINIA

NAVAL STATION — U.S. NAVAL STATION GUANTANAMO BAY, CUBA

OILY WASTE/WASTE OIL COLLECTION PIER A AND WHARVES B, T, AND U

PARTIAL SITE PLAN PIER A–ELEC SITE PLAN

CODE ID. NO. 80091	SIZE D
SCALE:	
EFD NO.	
STA. PROJ. NO.	
SPEC. NO. 05-00-4505	
CONSTR. CONTR. NO. N62470-00-C-4505	
NAVFAC DRAWING NO. 4407622	
SHEET	OF
E-10	

8805E010

DRAWFORM REVISION 25 SEPT 96

M:\Elec\8805E010.DWG Last Update: 8/9/2000 Plotted: 8/9/2000 1:40 pm By: Shewman Plot Scale: 1=10.0 Xref Dwg's:

PANEL "LA" SCHEDULE

NEMA 3R ENCLOSURE

MAIN BREAKER SHALL BE LOCATED IN BOTTOM OF PANEL.

200A MAIN BREAKER, 208Y/120 V, 3 PHASE, 4 WIRE, 10 KAIC MINIMUM, SURFACE MOUNT

LOAD SERVED	LOAD (AMPS) A	B	C	BKR TRIP	WIRE SIZE	CKT No.	PHASE A B C	CKT No.	WIRE SIZE	BKR TRIP	LOAD (AMPS) A	B	C	LOAD SERVED
EXISTING LOADS				20	*	1		4	2	150	96.6			DUPLEX TRANSFER PUMP STATION TPS-1, 2@15 HP
					*	3			2			96.6		
EXISTING LOADS				20	*	5			2				96.6	
					*	7		8						SPACE
EXISTING LOADS				20	*	9								
EXISTING LOADS				20	*	11		12						SPACE
SPACE						13								
SPACE						15		16						SPACE
SPACE						17								
SPACE						19		20						SPACE
SPACE						21								
SPACE						23		24						SPACE
SPACE						25		26						SPACE
SPACE						27		28						SPACE
SPACE						29		30						SPACE
SPACE						31		32						SPACE
SPACE						33		34						SPACE
SPACE						35		36						SPACE
SPACE						37		38						SPACE
SPACE						39		40	3	100				EXISTING PANEL "LB"
SPACE						41			3					
TOTAL														TOTAL

TOTAL CONNECTED AMPS A: B: C:

* RECONNECT EXISTING LOADS

PANEL "PA" SCHEDULE

NEMA 3R ENCLOSURE

200A MAIN BREAKER, 208Y/120 V, 3 PHASE, 4 WIRE, 10 KAIC MINIMUM, SURFACE MOUNT

LOAD SERVED	LOAD (AMPS) A	B	C	BKR TRIP	WIRE SIZE	CKT No.	PHASE A B C	CKT No.	WIRE SIZE	BKR TRIP	LOAD (AMPS) A	B	C	LOAD SERVED
EXISTING LOADS					*	1		2						SPACE
EXISTING LOADS					*	3								
EXISTING LOADS					*	5		6						SPACE
EXISTING LOADS					*	7								
EXISTING LOADS					*	9		10						SPACE
EXISTING LOADS					*	11								
EXISTING LOADS					*	13		14						SPACE
EXISTING LOADS					*	15								
EXISTING LOADS					*	17		18						SPACE
EXISTING LOADS					*	19								
EXISTING LOADS					*	21		22						SPACE
EXISTING LOADS					*	23								
EXISTING LOADS					*	25		26						SPACE
EXISTING LOADS					*	27		28						SPACE
EXISTING LOADS					*	29		30						SPACE
EXISTING LOADS					*	31		32						SPACE
EXISTING LOADS					*	33		34						SPACE
EXISTING LOADS					*	35		36						CONTACTOR CONTROL CKT (FUTURE)
EXISTING LOADS					*			40	8	60	35.0			DUPLEX TRANSFER PUMP STATION TPS-2, 2@5HP
					*	39			8			35.0		
					*				8				35.0	
TOTAL														TOTAL

TOTAL CONNECTED AMPS A: B: C:

* RECONNECT EXISTING LOADS

REVISIONS

SYM.	DESCRIPTION	DATE	APPROVED

A/E DESIGN L.L.S. DRAWN L.L.K. REVIEW

QC CHIEF ARCH./ ENGR.

PROJECT MANAGER

FIRE PROTECTION

BRANCH MANAGER

DESIGN DIRECTOR

GEE & JENSON Engineers-Architects-Planners, Inc.
Florida 32549 - EB 0000244 - AA 0000606

A/E CONTRACT NO. 92-C-2081

APPROVED DATE

ACTIVITY – SATISFACTORY TO

APPROVED DATE 18 AUG 00

FOR EFD FOR COMMANDER NAVFAC

SEAL

DEPARTMENT OF THE NAVY

NAVAL STATION

ATLANTIC DIVISION

NAVAL FACILITIES ENGINEERING COMMAND

NORFOLK, VIRGINIA

U.S. NAVAL STATION GUANTANAMO BAY, CUBA

OILY WASTE/WASTE OIL COLLECTION PIER A AND WHARVES B, T, AND U

PANEL SCHEDULES

CODE ID. NO. 80091 SIZE D

SCALE:

EFD NO.

STA. PROJ. NO.

SPEC. NO. 05-00-4505

CONSTR. CONTR. NO. N62470-00-C-4505

NAVFAC DRAWING NO. 4407623

SHEET OF

E-11

8805E011

DRAWFORM REVISION 25 SEPT 96

REV/DATE

32

M:\Elec\8805E011.DWG Last Update: 8/4/2000 Plotted: 8/9/2000 1:40 pm By: Sherman Plot Scale: 1=10.0 Xref Dwg's:

SUMP PUMPS
PIER A AND WHARVES B, T, AND U
NAVAL STATION GUANTANAMO BAY, CUBA

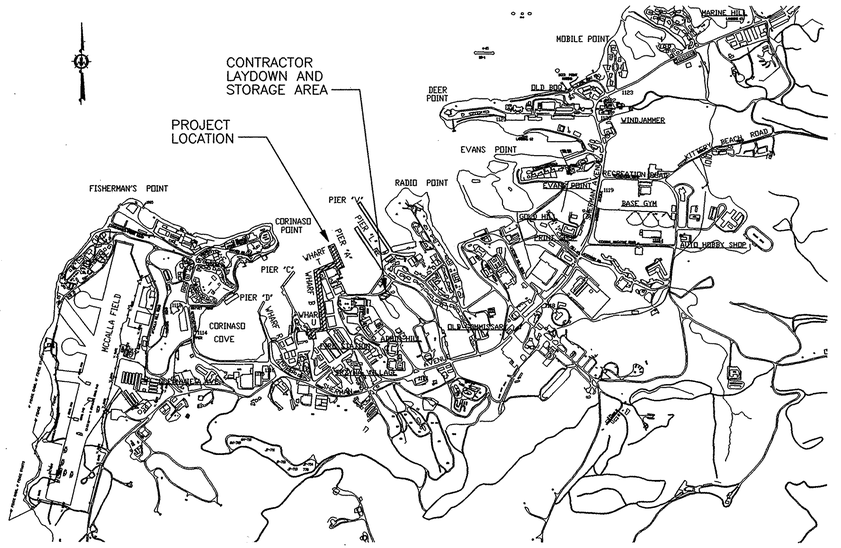

VICINITY MAP

1000 500 0 2000
SCALE FEET

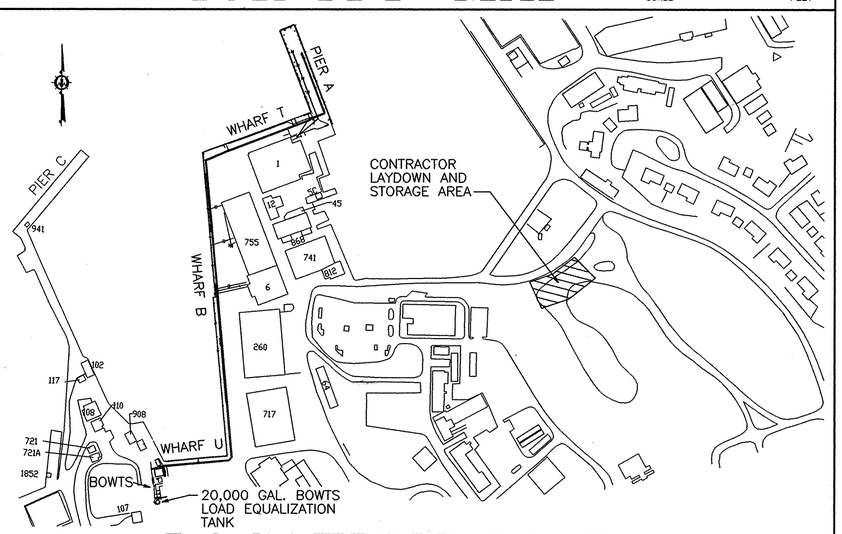

LOCATION MAP

200' 0 200'

DRAWING INDEX

SHEET No.	EFD No.	NAVFAC No.	SHEET TITLE
T-1		4407683	TITLE SHEET AND DRAWING INDEX
T-2		4407684	PUMP SCHEDULE
S-1		4407685	SITE PLAN
C-1		4407686	SUMP PUMP ABOVE GROUND PIPING
C-2		4407687	STA. 0+04.00 TO STA. 2+70.00
C-3		4407688	STA. 2+70.00 TO STA. 5+40.00
C-4		4407689	STA. 5+40.00 TO STA. 8+10.00
C-5		4407690	STA. 8+10.00 TO STA. 10+80.00
C-6		4407691	STA. 10+80.00 TO STA. 13+50.00
C-7		4407692	STA. 13+50.00 TO STA. 16+20.00
C-8		4407693	STA. 16+20.00 TO STA. 18+40.00
C-9		4407694	STA. 18+40.00 TO STA. 19+93.00
C-10		4407695	SECTIONS
C-11		4407696	SECTIONS
C-12		4407697	SECTIONS
E-1		4407698	BOWTS AREA – ELECTRICAL SITE PLAN
E-2		4407699	STA. 0+42.00 TO STA. 2+70.00
E-3		4407700	STA. 2+70.00 TO STA. 5+40.00
E-4		4407701	STA. 5+40.00 TO STA. 8+10.00
E-5		4407702	PARTIAL SITE PLAN BLDG. #260, #6 & #755–ELEC
E-6		4407703	STA. 8+10.00 TO STA. 10+80.00
E-7		4407704	STA. 10+80.00 TO STA. 13+50.00
E-8		4407705	STA. 13+50.00 TO STA. 16+20.00
E-9		4407706	STA. 16+20.00 TO STA. 18+40.00
E-10		4407707	PARTIAL SITE PLAN PIER A – ELEC SITE PLAN
E-11		4407708	PANEL SCHEDULES

FOR ADDITIONAL NOTES, SEE SHEET T-2

QUALITY CONTROL REVIEW

SIGNATURE DATE

GENERAL NOTES

1. ALL DISTANCES AND ELEVATIONS ARE IN FEET.
2. ELEVATIONS ARE BASED ON U.S. NAVAL BASE GUANTANAMO BAY, CUBA BENCH MARK SYSTEM, AS INDICATED ON THE DRAWINGS.
3. THE LOCATION AND ELEVATION OF EXISTING STRUCTURES, PIPING, AND UTILITIES SHOWN ARE BASED ON BEST AVAILABLE DATA. FIELD VERIFY ALL UTILITIES, PIPING AND STRUCTURES PRIOR TO CONSTRUCTION OF NEW PIPING AND UTILITIES.
4. SURVEY PERFORMED BY MR. TOM GUFFEY, CLS FROM WILEY AND WILSON ON FEBRUARY (4 TO 9), 1998.
5. THE EXISTING DIESEL FUEL MARINE SYSTEM AND POTABLE WATER SUPPLY SYSTEM SHALL REMAIN IN OPERATION DURING CONSTRUCTION. PERFORM ALL WORK TO ENSURE CONTINUOUS OPERATION OF THESE FACILITIES.
6. OBTAIN APPROVAL OF THE CONTRACTING OFFICER BEFORE BEGINNING ANY EXCAVATIONS ON THE PIER AND WHARVES.
7. DURING CONSTRUCTION PIER A, WHARVES B, T, U, ACCESSWAYS AND ROADWAYS SHALL REMAIN IN OPERATION. ONE HALF OF WHARF B WILL BE MADE AVAILABLE FOR THE CONTRACTOR TO PERFORM WORK. AT NO TIME CAN WHARF B BE COMPLETELY SHUT DOWN FOR CONSTRUCTION. THE NAVY WILL REQUIRE ACCESS TO THE SOUTH HALF OF WHARF B EVERY OTHER WEEK FOR THREE DAYS. COORDINATE CONSTRUCTION WORK IN THIS AREA WITH THE CONTRACTING OFFICER.
8. PROVIDE PAINTED LABEL (STENCILED) ON STEEL AND CONCRETE TRENCH COVERS TO IDENTIFY LOCATION OF ALL AIR RELEASE VALVES AND SUMP PUMPS. LETTERS WILL BE 1.5 INCHES HIGH (MINIMUM), BLACK IN COLOR.
9. ~~DURING CONSTRUCTION ALONG WHARF BRAVE A 10" WATERLINE IS BEING CONSTRUCTED. COORDINATE CONSTRUCTION IN THIS AREA WITH THE CONTRATING OFFICER.~~ DELETE NOTE 9.

REVISIONS

SYM	DESCRIPTION	DATE	APPROVED

EFD
CJC DESIGN
GC DRAWN
GC REVIEW
CHIEF ARCH./ ENGR.
QC
PROJECT MANAGER
FIRE PROTECTION
BRANCH MANAGER
DESIGN DIRECTOR

GEE & JENSON
Engineers • Architects • Planners, Inc.
Florida Corporation Certificate of Authorization No. 00001
Florida License No. 00001 • A.E. 0000001

A/E CONTRACT NO. 62-C-5021

SUBMITTED Greg Blalock 3-15-02
APPROVED SATISFACTORY TO DATE
FOR EFD, FOR COMMANDER, NAVFAC

NAVAL FACILITIES ENGINEERING COMMAND
ATLANTIC DIVISION
NORFOLK, VIRGINIA
DEPARTMENT OF THE NAVY
NAVAL STATION
U.S. NAVAL STATION GUANTANAMO BAY, CUBA
SUMP PUMPS
PIER A AND WHARVES B, T, AND U
Title Sheet and Drawing Index

CODE ID. NO. 80091 SIZE D
SCALE:
EFD NO.
STA. PROJ. NO.
SPEC. NO. 05-00-4504
CONSTR. CONTR. NO. N62470-00-C-4504
NAVFAC DRAWING NO. 4407683
SHEET T-1 OF

8805T001
DRAWFORM REVISION 25 SEPT 96

D:\99099.03\Mech\8805T001.DWG Last Update: 7/3/2001 Plotted: 7/3/2001 9:14 am By: Goodearl Plot Scale: 1=1.0 Xref Dwg's:

SUMP PUMP SCHEDULE

TAG	TYPE	GPM	HEAD (FT)	ELECTRICAL					REMARKS
				HP	RPM	VOLTS	PHASE	HZ	
SP-1	SUBMERSIBLE	20	32	1	1800	208	1	60	
SP-2	SUBMERSIBLE	20	34	1	1800	208	1	60	
SP-3	SUBMERSIBLE	20	43	1	1800	208	1	60	
SP-4	SUBMERSIBLE	20	43	1	1800	208	1	60	
SP-5	SUBMERSIBLE	20	47	1	1800	208	1	60	
SP-6	SUBMERSIBLE	20	51	1	1800	208	1	60	
SP-7	SUBMERSIBLE	20	54	2	1800	208	1	60	
SP-8	SUBMERSIBLE	20	57	2	1800	208	1	60	
SP-9	SUBMERSIBLE	20	62	2	1800	208	1	60	
SP-10	SUBMERSIBLE	20	64	2	1800	208	1	60	
SP-11	SUBMERSIBLE	20	66	2	1800	208	1	60	
SP-12	SUBMERSIBLE	20	69	2	1800	208	1	60	

ABBREVIATIONS

AV	AIR VENT
BLDG	BUILDING
BM	BENCH MARK
BOTT	BOTTOM
DFM	DIESEL FUEL MARINE
DIA	DIAMETER
EL	ELEVATION
GAL	GALLON
LT	LEFT
MJ	MECHANICAL JOINT
OW/WO	OILY WASTE/WASTE OIL
RT	RIGHT
SP	SUMP PUMP
SPFM	SUMP PUMP FORCE MAIN
STA	STATION
TYP	TYPICAL
VERT	VERTICAL

LEGEND

EXISTING	DESCRIPTION	NEW
	SPFM	
	SUMP PUMP	●
	VALVE	⋈
	REDUCER	⋈
	PUMP CONNECTION	○
○	MANHOLE	
□	DROP INLET	
2A	SOIL BORING	
	UNDERGROUND UTILITY	
	AIR VENT	AV
	THREE WAY VALVE	

GENERAL NOTES:

1. DRAWINGS C-2, C-10, AND C-11 WERE MODIFIED TO INCLUDE THE WORK UNDER CONSTRUCTION CONTRACTS:

   N62470-99-C-9146, REPAIR WATER DISTRIBUTION STYSTEM, PHASE A
   N62470-00-C-4505, OILY WASTE/WASTE OIL COLLECTION, PIER A AND WHARVES B, T, AND U. THE CONTRACTOR SHALL COORIDINATE HIS WORK ACCORDINGLY WITH THESE TWO CONSTRUCTION PROJECTS.

2. CONSTRUCTION CONTRACT DACW62-99-D-D023, INTERCEPTOR/RECOVERY TRENCH ON WHARF UNIFORM – DESIGN-BUILD CONTRACT- THE CONTRACTOR SHALL COORIDATE HIS WORK ACCORDINGLY WITH THIS PROJECT.

3. THE 10-INCH WATER LINE WAS REMOVED FROM THE TRENCH UNDER PHASE A CONSTRUCTION CONTRACT N62470-99-C-9146 AND PROVIDED UNDERGROUND NEAR THE TRENCH

4. CONSTRUCTION CONTRACT N62470-00-C-4505 PROVIDES AN OILY WASTE/WASTE OIL COLLECTION IN THE TRENCH.

5. CONSTRUCTION CONTRACT DACW62-99-D-D023 PROVIDES A RECOVERY PIPING SYSTEM IN THE TRENCH

REVISIONS

STM.	DESCRIPTION	DATE	APPROVED

A/E GG DESIGN
GG DRAWN
REVIEW
QC
CHIEF ARCH./ ENGR.
PROJECT MANAGER
FIRE PROTECTION
BRANCH MANAGER
DESIGN DIRECTOR

GEE & JENSON
ENGINEERS-ARCHITECTS-PLANNERS, INC.
CIVIL SURVEYS, OFFICE - WEST PALM BEACH, FLORIDA • TAMPA • ORLANDO • FT. LAUDERDALE • FT. MYERS

A/E CONTRACT NO. 32-2L-5051 DATE
APPROVED
ACTIVITY – SATISFACTORY TO DATE
APPROVED
FOR ID FOR COMMANDING OFFICER

DEPARTMENT OF THE NAVY
NAVAL STATION
NAVAL FACILITIES ENGINEERING COMMAND
ATLANTIC DIVISION
NORFOLK, VIRGINIA
U.S. NAVAL STATION GUANTANAMO BAY, CUBA
SUMP PUMPS
PIER A AND WHARVES B, T, AND U
SCHEDULES

CODE ID. NO. 80091 | SIZE D
SCALE: NONE
EFD NO.
STA. PROJ. NO.
SPEC. NO. 05-00-4504
CONSTR. CONTR. NO. N62470-00-C-4504
NAVFAC DRAWING NO. 4407684
SHEET OF
T-2

8805T002
DRAWFORM REVISION 25 SEPT 96

D:\99099\03\Mech\8805T002.DWG Last Update: 2/22/2001 Plotted: 7/3/2001 9:14 am By: Goodearl Plot Scale: 1=1.0 X-Ref Dwg's:

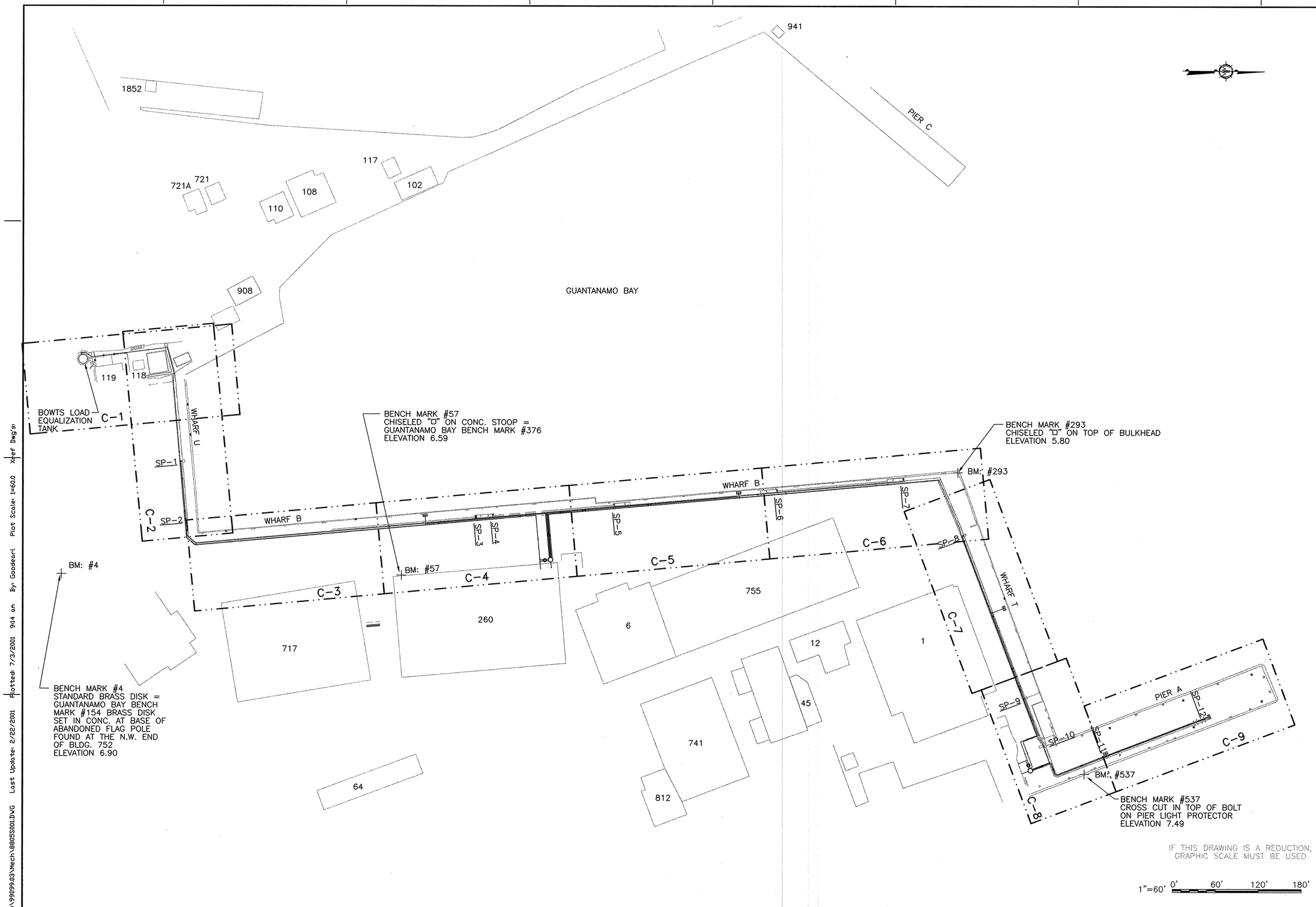

REVISIONS

SYM.	DESCRIPTION	DATE	APPROVED

A/E GG DESIGN
GG DRAWN
REVIEW
QC
CHIEF ARCH./ ENGR.
PROJECT MANAGER
FIRE PROTECTION
BRANCH MANAGER
DESIGN DIRECTOR

GEE & JENSON
Engineers • Architects • Planners, Inc.
Ocean Highway • Norfolk, Virginia • 23518-5399
A/E CONTRACT NO. 99-D-5091
APPROVED DATE
ACTIVITY – SATISFACTORY TO
APPROVED DATE 3 July 2003
FOR EFD FOR COMMANDER NAVFAC

JEFFREY L. HOLTZ
CERTIFICATE NO. 0-02079
STATE OF FLORIDA
REGISTERED PROFESSIONAL ENGINEER
SEAL

DEPARTMENT OF THE NAVY
NAVAL STATION
ATLANTIC DIVISION
NAVAL FACILITIES ENGINEERING COMMAND
NORFOLK, VIRGINIA
U.S. NAVAL STATION GUANTANAMO BAY, CUBA
SUMP PUMPS
PIER A AND WHARVES B, T, AND U
SITE PLAN

CODE ID. NO. 80091 SIZE D
SCALE:
EFD NO.
STA. PROJ. NO.
SPEC. NO. 05-00-4504
CONSTR. CONTR. NO. N62470-00-C-4504
NAVFAC DRAWING NO. 4407685
SHEET OF
S-1

8805S001
DRAWFORM REVISION 25 SEPT 96

REV/DATE

D:\99099.03\Mech\8805S001.DWG Last Update: 2/22/2001 Plotted: 7/3/2001 9:14 am By: Goodear\ Plot Scale: 1=60.0 Xref Dwg's:

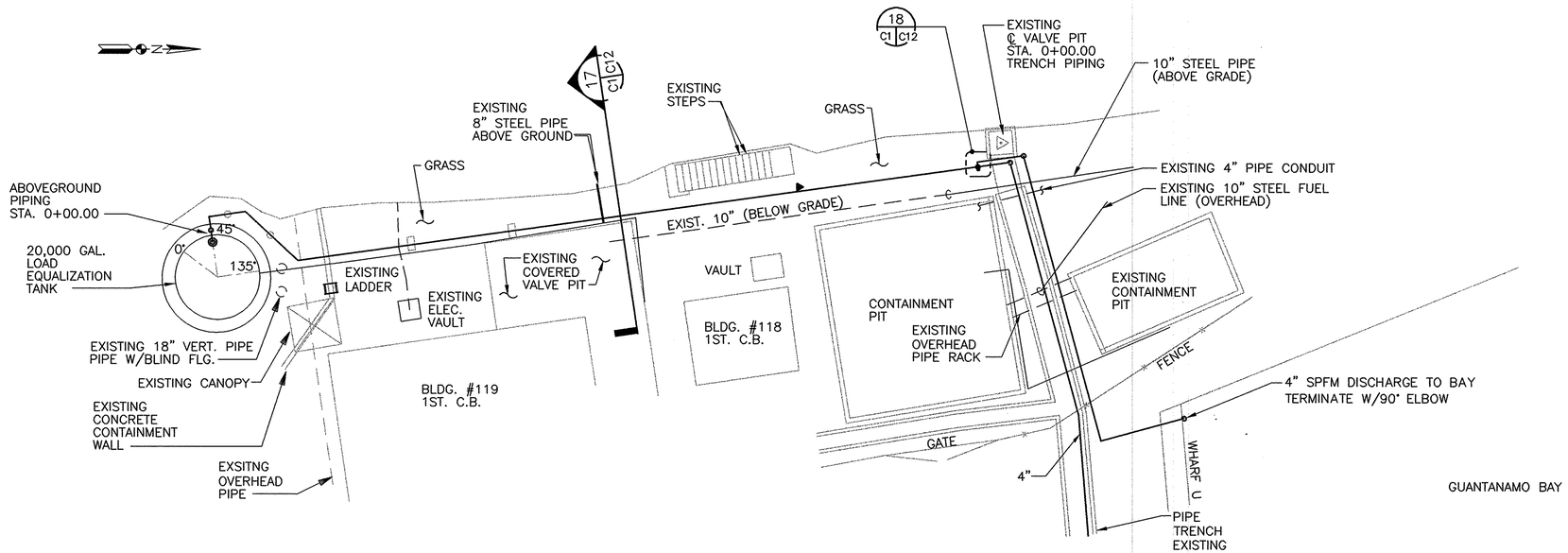

STA. 0+00.00
ABOVEGROUND PIPING
PROVIDE:
1 – 4" GATE VALVE
1 – 4" CHECK VALVE
1 – 4"–90° BEND

STA. 0+05.91
PROVIDE:
1 – 4"–45° BEND

STA. 0+17.10
PROVIDE:
1 – 4"–45° BENDS

STA. 0+64.00
PROVIDE:
2 – 4"–90° BENDS
1 – AV

STA. 1+15.00
PROVIDE:
1 – 4" 3–WAY BALL VALVE W/ELECTRIC ACTUATOR

STA. 1+23.15 ABOVEGROUND PIPING= STA. 0+04.00, 0.80' LT. TRENCH PIPING
PROVIDE:
2 – 4" 90° BENDS
1 – CORE DRILL 14" DIA. OPENING IN TOP OF TUNNEL
1 – MECHANICAL SEAL

BENCH MARK #4
STANDARD BRASS DISK =
GUANTANAMO BAY BENCH MARK #154
BRASS DISK SET IN CONC. AT BASE OF ABANDONED FLAG POLE FOUND AT THE N.W. END OF BLDG. 752
ELEVATION 6.90
FOR LOCATION OF BENCH MARK #4 SEE SHEET T–2

NOTE:

STATIONING IS MEASURED ALONG CENTERLINE OF ABOVEGROUND PIPE.

IF THIS DRAWING IS A REDUCTION, GRAPHIC SCALE MUST BE USED.

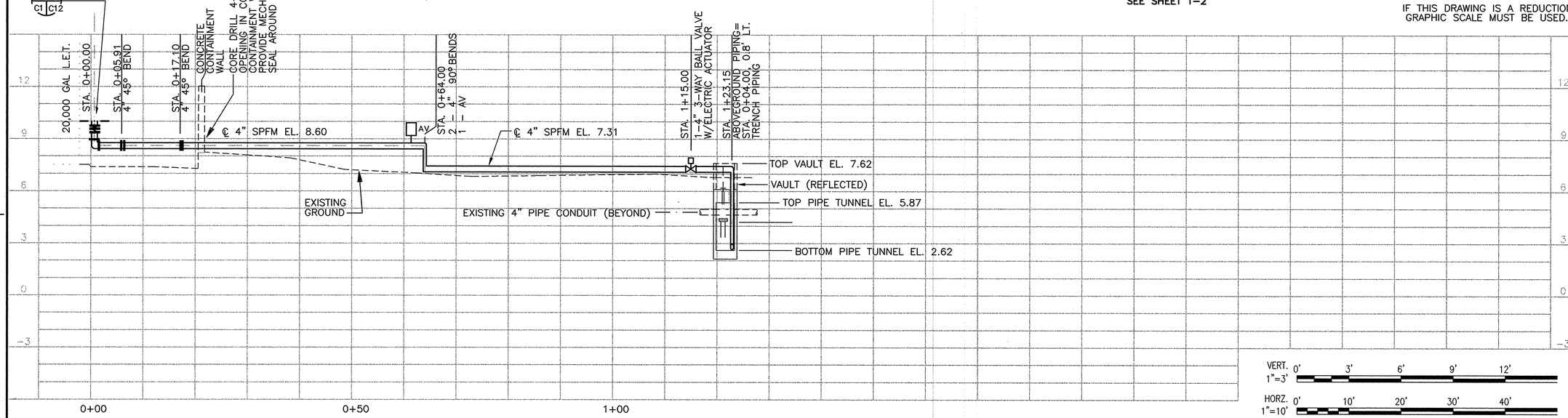

VERT. 1"=3' 0' 3' 6' 9' 12'

HORZ. 1"=10' 0' 10' 20' 30' 40'

REVISIONS			
DTM.	DESCRIPTION	DATE	APPROVED

DESIGN CVE
DRAWN GG
REVIEW
CHIEF ARCH./ ENGR.
PROJECT MANAGER
FIRE PROTECTION
BRANCH MANAGER
DESIGN DIRECTOR

A/E CONTRACT NO.

GEE & JENSON
Engineers-Architects-Planners, Inc.
700 AUTUMN DRIVE • WEST PALM BEACH, FLORIDA 33401 • (561) 686-8300

APPROVED

ACTIVITY – SATISFACTORY TO
APPROVED DATE July 2003
FOR EFD, FOR COMMANDER, NAVFAC

DEPARTMENT OF THE NAVY
NAVAL STATION
U.S. NAVAL STATION
NAVAL FACILITIES ENGINEERING COMMAND
ATLANTIC DIVISION
NORFOLK, VIRGINIA
GUANTANAMO BAY, CUBA

SUMP PUMPS PIER A AND WHARVES B, T, AND U

SUMP PUMP ABOVEGROUND PIPING

CODE ID. NO. 80091 | SIZE D
SCALE: AS NOTED
EFD NO.
STA. PROJ. NO.
SPEC. NO. 05-00-4504
CONSTR. CONTR. NO. N62470-00-C-4504
NAVFAC DRAWING NO. 4407686
SHEET OF
C-1

8805C001
DRAWFORM REVISION 23 SEPT 96

REV/DATE

D:\99099.03\Mech\8805C001.DWG Last Update: 2/28/2001 Plotted 7/3/2001 9:12 am By: Goodeart Plot Scale: 1=10.0 Xref Dwg's:

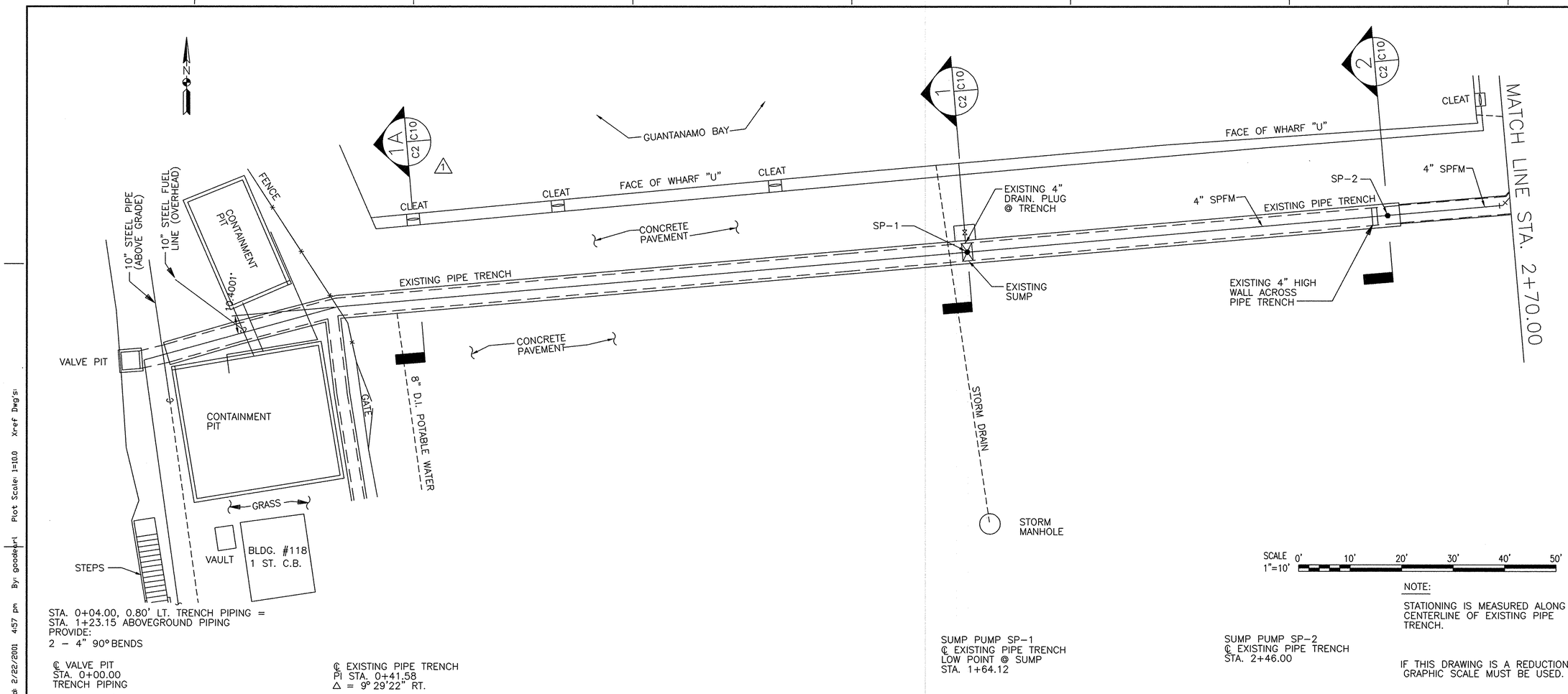

STA. 0+04.00, 0.80' LT. TRENCH PIPING =
STA. 1+23.15 ABOVEGROUND PIPING
PROVIDE:
2 – 4" 90° BENDS

℄ VALVE PIT
STA. 0+00.00
TRENCH PIPING

℄ EXISTING PIPE TRENCH
PI STA. 0+41.58
Δ = 9° 29'22" RT.

SUMP PUMP SP-1
℄ EXISTING PIPE TRENCH
LOW POINT @ SUMP
STA. 1+64.12

SUMP PUMP SP-2
℄ EXISTING PIPE TRENCH
STA. 2+46.00

NOTE:

STATIONING IS MEASURED ALONG CENTERLINE OF EXISTING PIPE TRENCH.

IF THIS DRAWING IS A REDUCTION, GRAPHIC SCALE MUST BE USED.

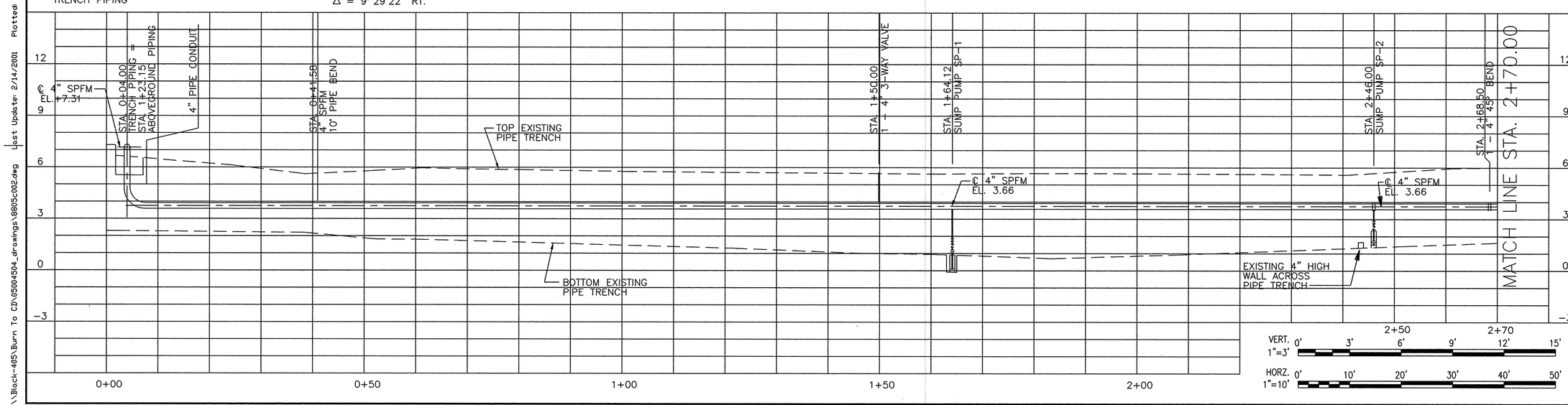

REVISIONS			
			APPROVED
		DATE	
		DESCRIPTION	
1	REVISION NO. 1 (BASED ON FIELD VERIFICATION)	6/17/03	

A/E CONTRACT NO. 89-02-D-0031 — GEE & JENSON Engineers-Architects-Planners, Inc. Tampa, Florida — Tel 813/251-1900 — Fax 813/251-1908 — AA C000544

APPROVED — DATE

ACTIVITY – SATISFACTORY TO — DATE

APPROVED C. [illegible] 3 Jul 2003

FOR CTO FOR COMMANDER NAVFAC

A/E GG DESIGN — GG DRAWN — REVIEW — QC — CHIEF ARCH/ ENGR. — PROJECT MANAGER — FIRE PROTECTION — BRANCH MANAGER — DESIGN DIRECTOR SOL

DEPARTMENT OF THE NAVY — NAVAL FACILITIES ENGINEERING COMMAND — NORFOLK, VIRGINIA

NAVAL STATION — ATLANTIC DIVISION

U.S. NAVAL STATION — GUANTANAMO BAY, CUBA

SUMP PUMPS PIER A AND WHARVES B, T, AND U

STA. 0+04.00 TO STA. 2+70.00

CODE ID. NO. 80091 — SIZE D

SCALE: AS NOTED

EFD NO.

STA. PROJ. NO.

SPEC. NO. 05-00-4504

CONSTR. CONTR. NO. N62470-00-C-4504

NAVFAC DRAWING NO. 4407687

SHEET OF

C-2

8805c002

DRAWFORM REVISION 25 SEPT 96

REVDATE

\\Black-405\Burn To CD\05004504_drawings\8805c002.dwg Last Update: 2/14/2001 Plotted: 2/22/2001 4:57 pm By: goodelprl Plot Scale: 1:10.0 Xref Dwg's:

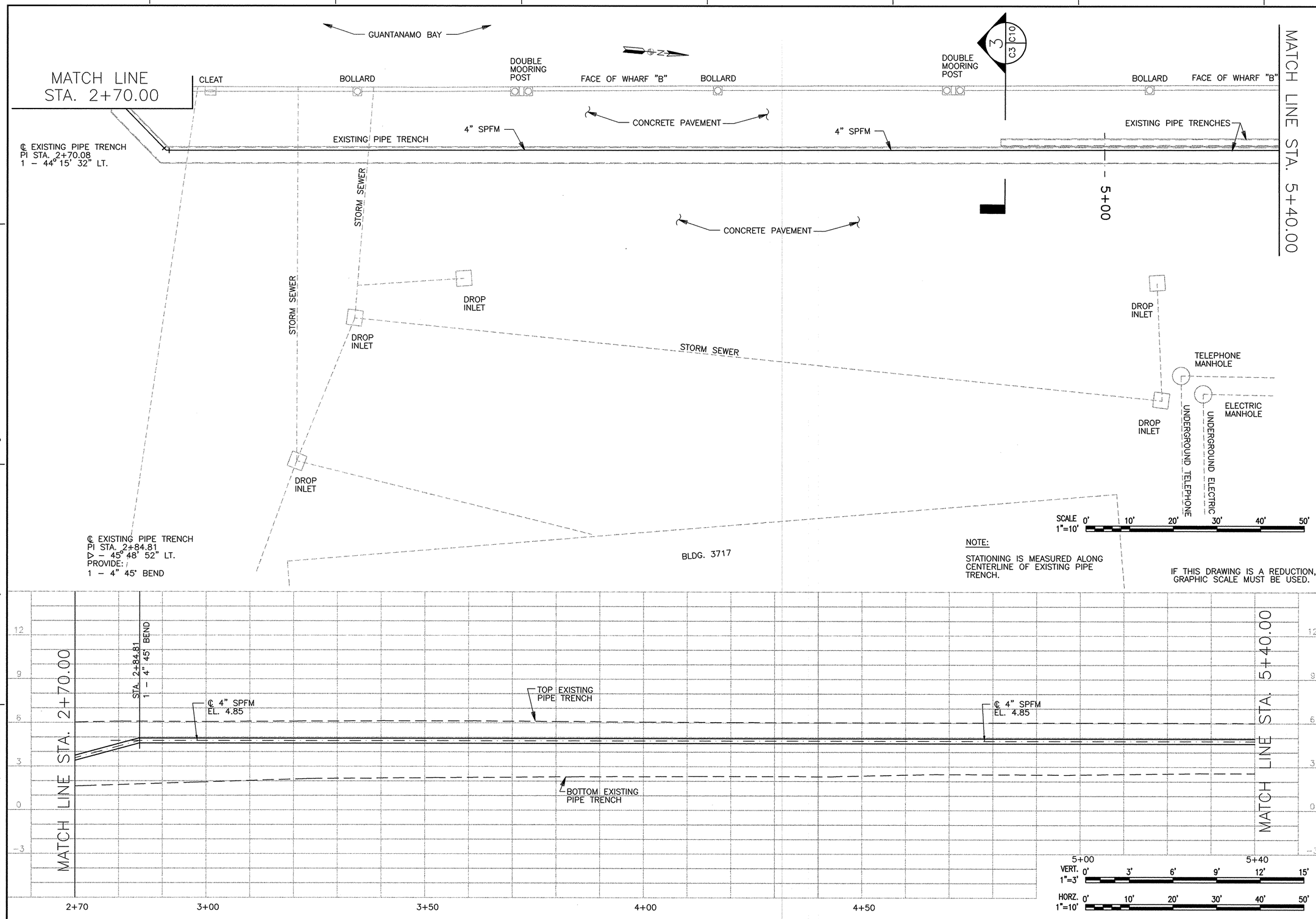

REVISIONS

STM.	DESCRIPTION	DATE	APPROVED

EFD
A/E CG DESIGN
CG DRAWN
REVIEW
QC
CHIEF ARCH./ ENGR.
PROJECT MANAGER
PROJ. ENGINEER
BRANCH MANAGER
DESIGN DIRECTOR

GEE & JENSON
Engineers, Architects, Planners, P.A.
750 JUNIPER CREEK - WEST PALM BEACH
TEL. (561) 640-1000 - FAX (561) 640-1001

A/E CONTRACT NO. 281-E-5931
APPROVED DATE
ACTIVITY – SATISFACTORY TO
APPROVED DATE July 03
FOR: EFD FOR COMMANDER NAVFAC

NAVAL FACILITIES ENGINEERING COMMAND
DEPARTMENT OF THE NAVY
ATLANTIC DIVISION
NORFOLK, VIRGINIA
NAVAL STATION
U.S. NAVAL STATION GUANTANAMO BAY, CUBA
SUMP PUMPS
PIER A AND WHARVES B, T, AND U
STA. 2+07.00 TO STA. 5+40.00

CODE ID. NO. 80091 SIZE D
SCALE: AS NOTED
EFD NO.
STA. PROJ. NO.
SPEC. NO. 05-00-4504
CONSTR. CONTR. NO. N62470-00-C-4504
NAVFAC DRAWING NO. 4407688
SHEET OF
C-3

8805C003
DRAWFORM REVISION 25 SEPT 96

REV/DATE

D:\99999\03\Mech\8805C003.DWG Last Update: 2/22/2001 Plotted: 7/3/2001 9:12 am By: Goodearl Plot Scale: 1=10.0 Xref Dwg:

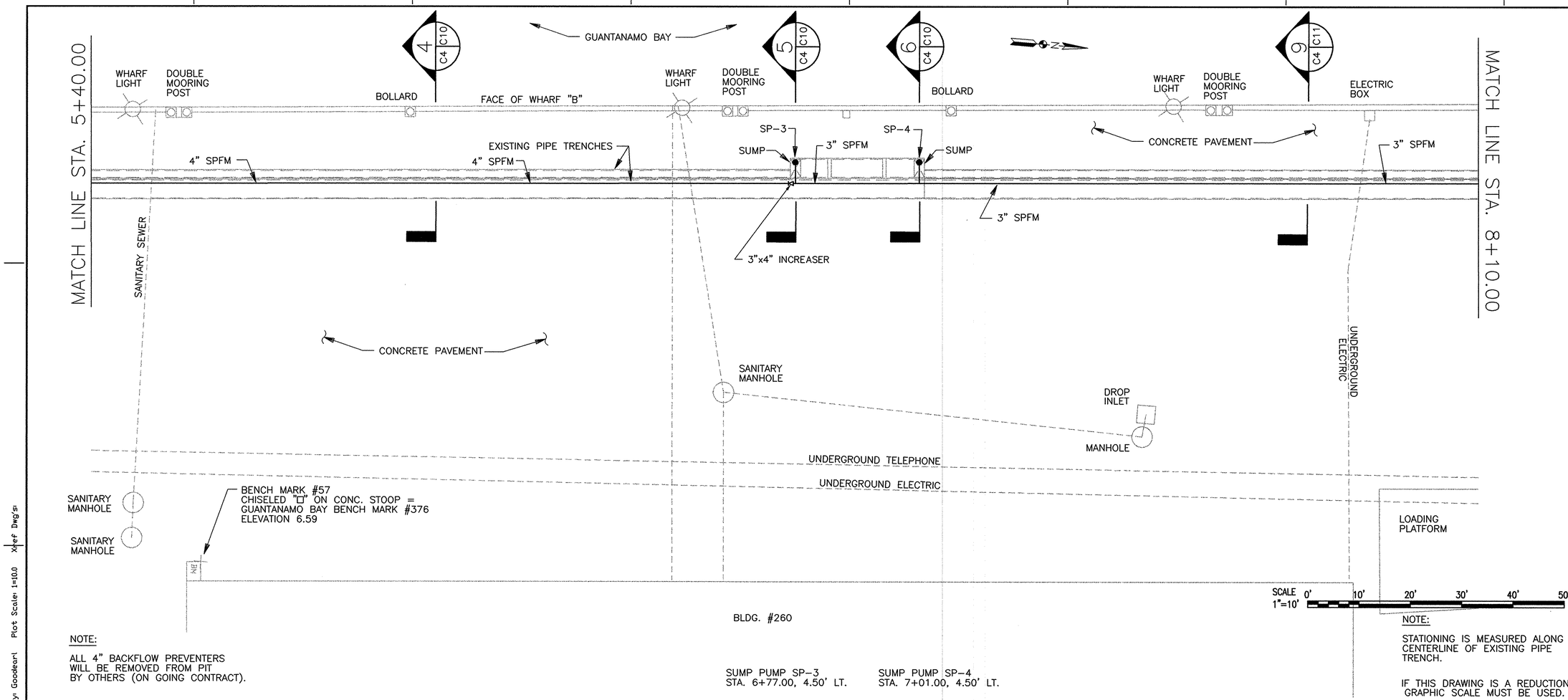

NOTE:

ALL 4" BACKFLOW PREVENTERS WILL BE REMOVED FROM PIT BY OTHERS (ON GOING CONTRACT).

SUMP PUMP SP-3
STA. 6+77.00, 4.50' LT.

SUMP PUMP SP-4
STA. 7+01.00, 4.50' LT.

NOTE:

STATIONING IS MEASURED ALONG CENTERLINE OF EXISTING PIPE TRENCH.

IF THIS DRAWING IS A REDUCTION, GRAPHIC SCALE MUST BE USED.

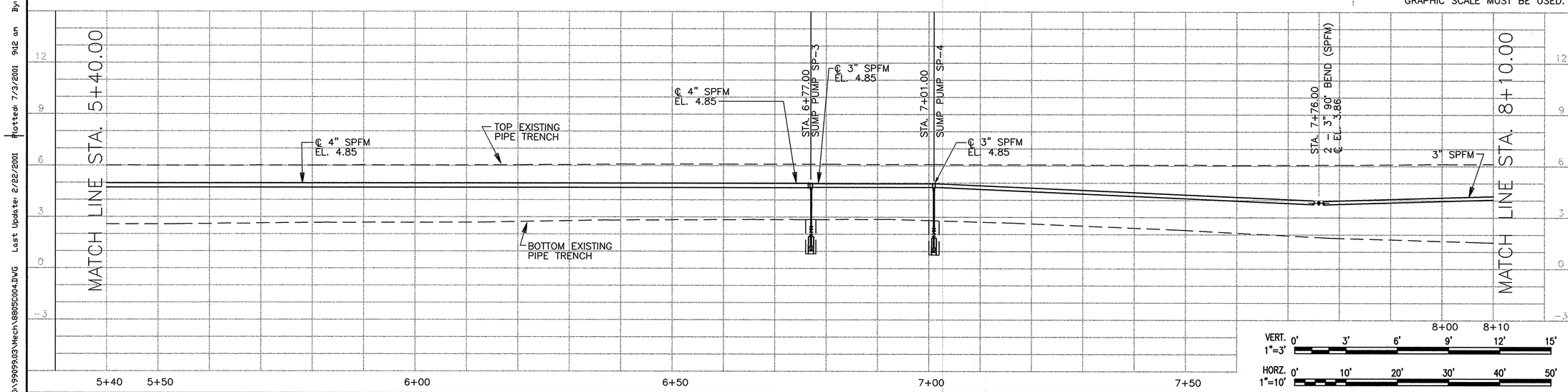

REVISIONS			
STAL	DESCRIPTION	DATE	APPROVED

A/E DESIGN GG
DRAWN GG
REVIEW
QC
CHIEF ARCH/ ENGR.
PROJECT MANAGER
FIRE PROTECTION
BRANCH MANAGER
DESIGN DIRECTOR

GEE & JENSON
Engineers • Architects • Planners, Inc.
Norfolk, Virginia • Tampa, Florida
A/E CONTRACT NO. 62742-00-D-0001 DATE
APPROVED
ACTIVITY – SATISFACTORY TO DATE
APPROVED 7 July 03
FOR EFD FOR COMMANDER NAVFAC

NAVAL FACILITIES ENGINEERING COMMAND
NORFOLK, VIRGINIA
DEPARTMENT OF THE NAVY
ATLANTIC DIVISION
NAVAL STATION
U.S. NAVAL STATION GUANTANAMO BAY, CUBA
SUMP PUMPS
PIER A AND WHARVES B, T, AND U
STA. 5+40.00 TO STA. 8+10.00

CODE ID. NO. 80091	SIZE D
SCALE: AS NOTED	
EFD NO.	
STA. PROJ. NO.	
SPEC. NO. 05-00-4504	
CONSTR. CONTR. NO. N62470-00-C-4504	
NAVFAC DRAWING NO. 4407689	
SHEET C-4	OF

8805C004
DRAWFORM REVISION 25 SEPT 96

REVDATE

D:\99099.03\Mech\8805C004.DWG Last Update: 2/22/2001 Plotted: 7/3/2001 9:12 am By: Goodeart Plot Scale: 1=10.0 Xref Dwg's:

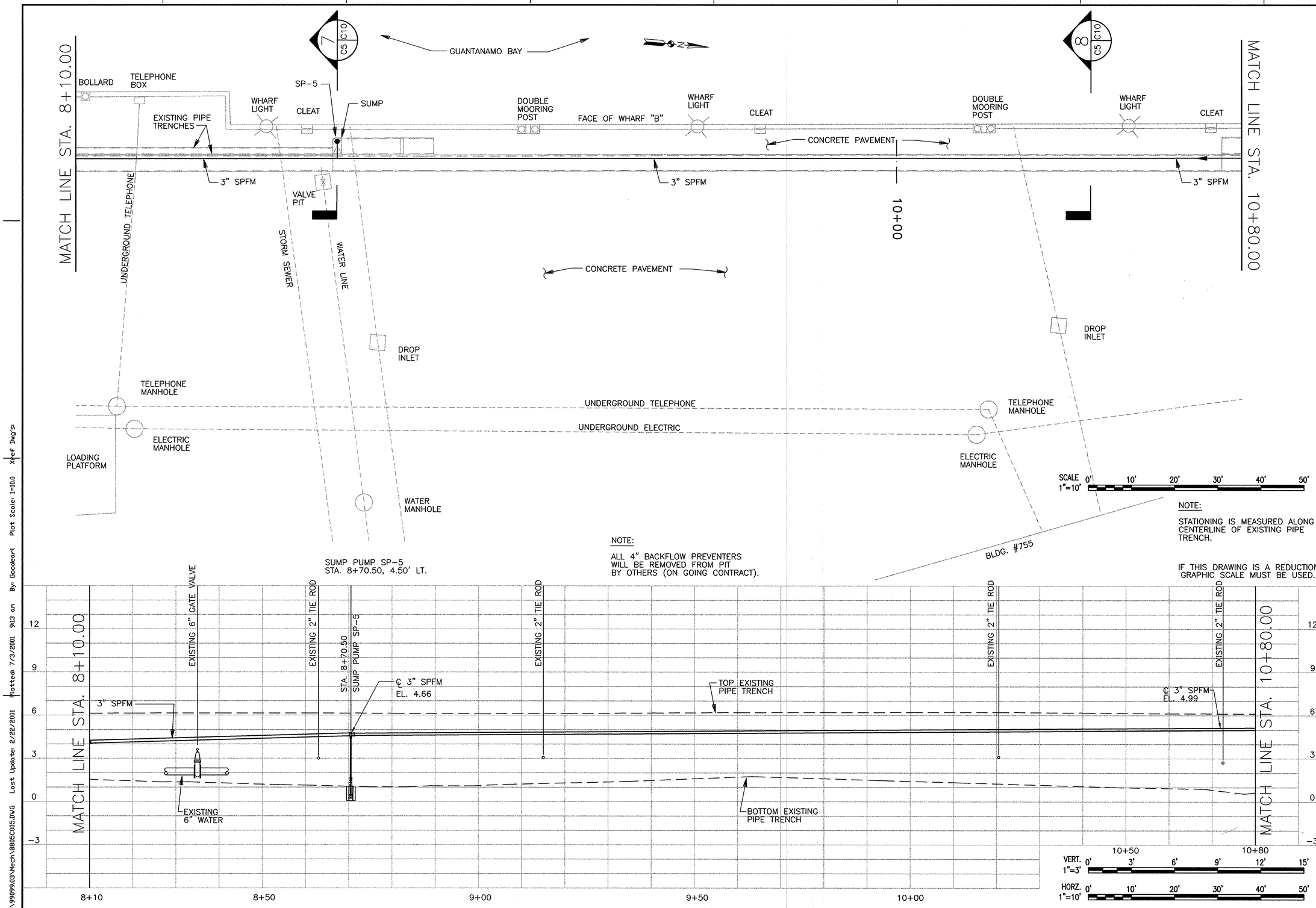

REVISIONS

STM.	DESCRIPTION	DATE	APPROVED

A/E GG DESIGN
GG DRAWN
GG REVIEW
QC
CHIEF ARCH./ ENGR.
PROJECT MANAGER
FIRE PROTECTION
BRANCH MANAGER
DESIGN DIRECTOR

GEE & JENSON
ENGINEERS, ARCHITECTS, PLANNERS, P.C.
GEE, JENSON, ENGEL, NEST/FRAY ROSS, INC.
ENGINEERS - ARCHITECTS - PLANNERS
A/E CONTRACT NO. 92-D-5051

APPROVED
ACTIVITY - SATISFACTORY TO
APPROVED DATE
FOR STF CDR COMMANDER NAVFAC

DEPARTMENT OF THE NAVY
NAVAL FACILITIES ENGINEERING COMMAND
ATLANTIC DIVISION
NORFOLK, VIRGINIA
NAVAL STATION
U.S. NAVAL STATION GUANTANAMO BAY, CUBA
SUMP PUMPS
PIER A AND WHARVES B, T, AND U
STA. 8+10.00 TO STA. 10+80.00

CODE ID. NO. 80091 SIZE D
SCALE: AS NOTED
EFD NO.
STA. PROJ. NO.
SPEC. NO. 05-00-4504
CONSTR. CONTR. NO. N62470-00-C-4504
NAVFAC DRAWING NO. 4407690
SHEET OF
C-5

8805C005
DRAWFORM REVISION 25 SEPT 96

D:\990993\Mech\8805C005.DWG Last Update: 2/22/2001 Plotted: 7/3/2001 9:13 am By: Goodearl Plot Scale: 1=10.0 Xref Dwg's:

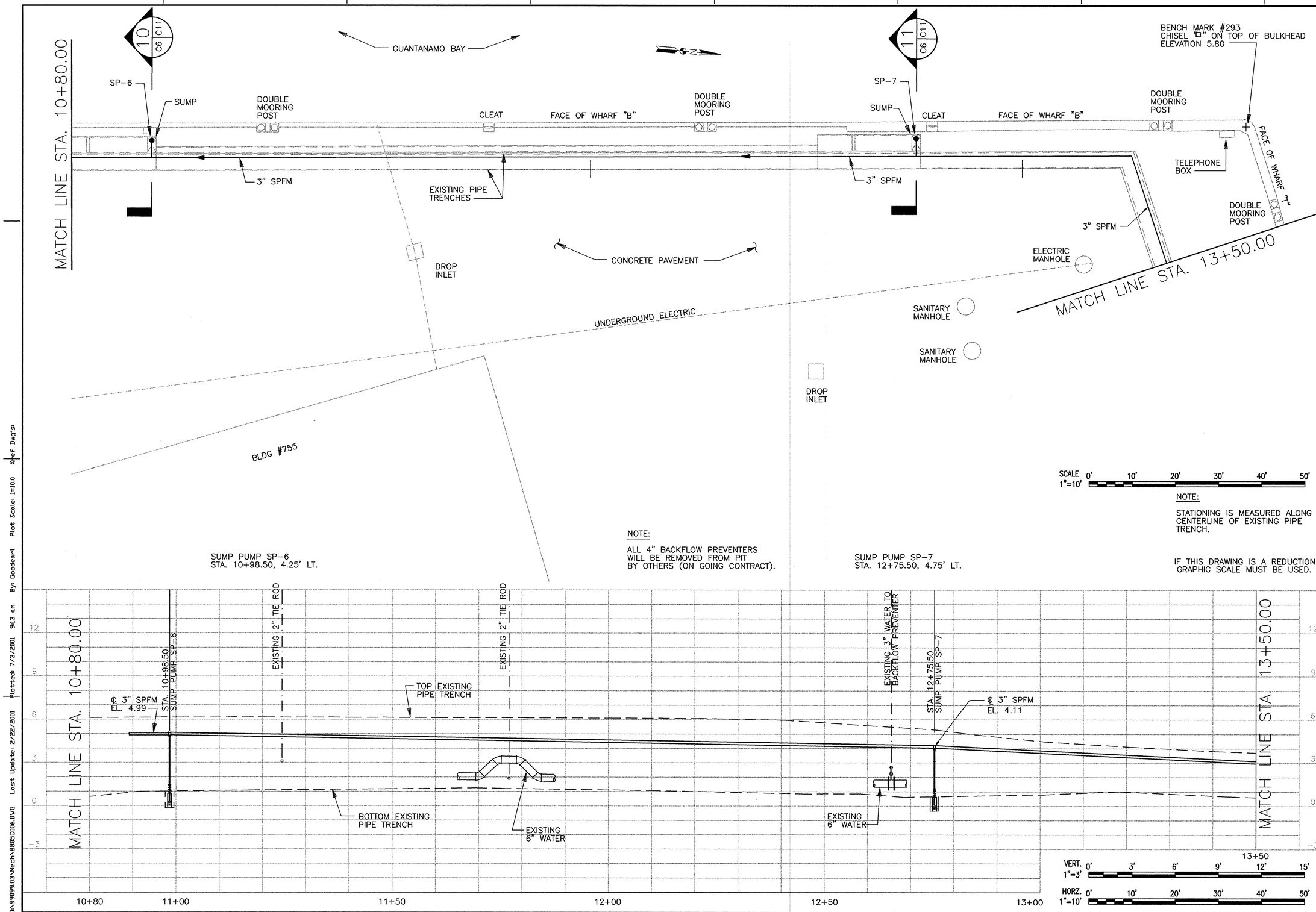

REVISIONS

DESCRIPTION	DATE	APPROVED

DESIGN
DRAWN
SUPERVISOR
CHIEF ARCH./ ENGR.
PROJECT MANAGER
FIRE PROTECTION
BRANCH MANAGER
DESIGN DIRECTOR

GEE & JENSON
Engineers • Architects • Planners, Inc.
Post Office Box 3240 • Norfolk, Virginia 23514
757-625-1000 • FAX 757-625-1001

A/E CONTRACT NO. 92-D-5091
APPROVED
ACTIVITY - SATISFACTORY TO
DATE
APPROVED 3 July 03
FOR EFD: FOR COMMANDER NAVFAC

DEPARTMENT OF THE NAVY
NAVAL STATION
U.S. NAVAL STATION
NAVAL FACILITIES ENGINEERING COMMAND
ATLANTIC DIVISION
NORFOLK, VIRGINIA
GUANTANAMO BAY, CUBA
SUMP PUMPS
PIER A AND WHARVES B, T, AND U
STA. 10+80.00 TO STA. 13+50.00

CODE ID. NO. 80091 SIZE D
SCALE: AS NOTED
EFD NO.
STA. PROJ. NO.
SPEC. NO. 05-00-4504
CONSTR. CONTR. NO. N62470-00-C-4504
NAVFAC DRAWING NO. 4407691
SHEET OF
C-6

8805C006
DRAWFORM REVISION 25 SEPT 96

REVDATE

D:\99099.03\Mech\8805C006.DWG Last Updated: 2/22/2001 Plotted: 7/3/2001 9:13 am By: Goodeurl Plot Scale: 1=10.0 Xref Dwg's:

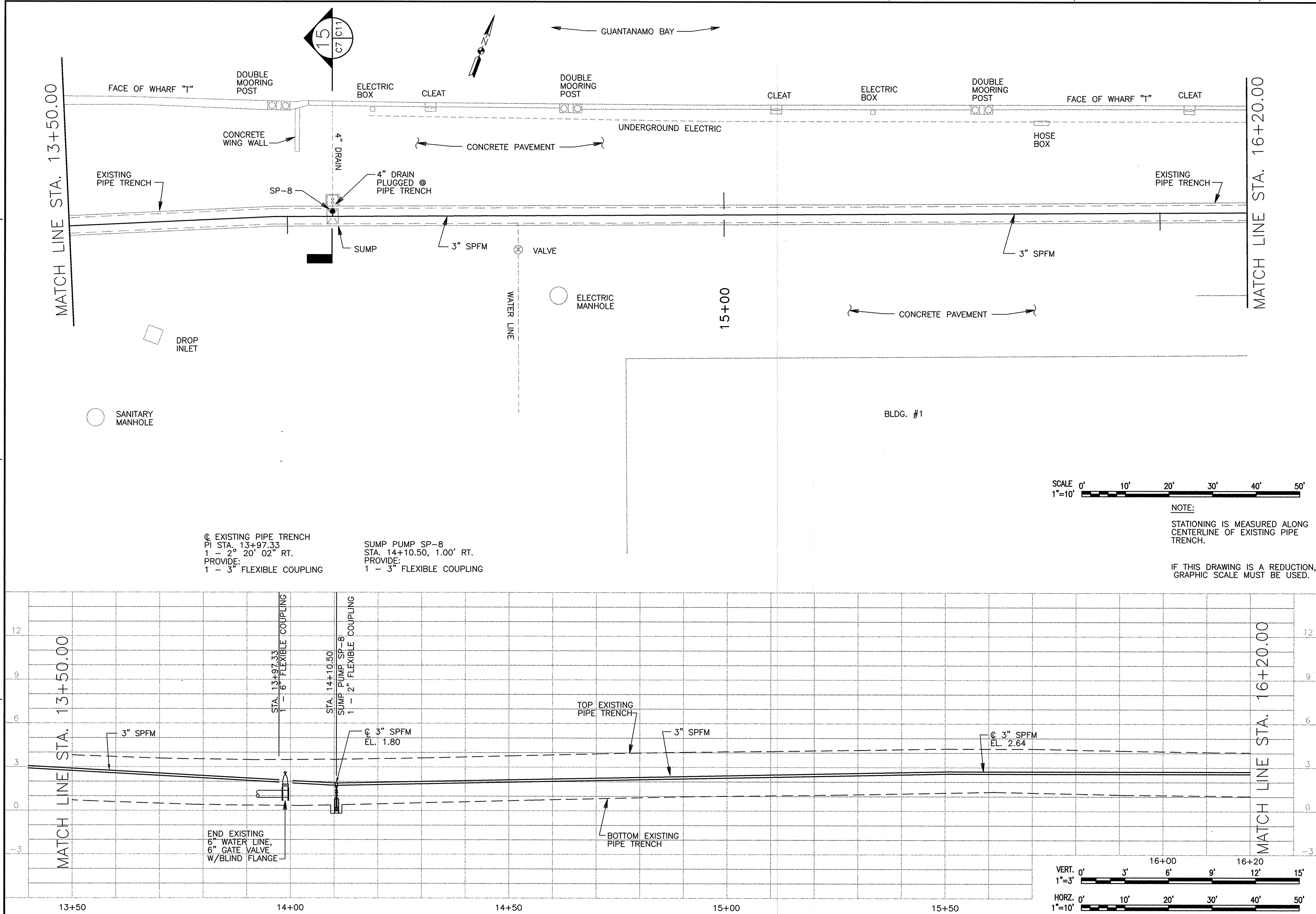

NOTE:

STATIONING IS MEASURED ALONG CENTERLINE OF EXISTING PIPE TRENCH.

IF THIS DRAWING IS A REDUCTION, GRAPHIC SCALE MUST BE USED.

D:\99099.03\Mech\8805C007.DWG Last Update: 2/22/2001 Plotted: 7/3/2001 9:13 am By: Goodearl Plot Scale: 1=10.0 Xref Dwg's:

SYM.	DESCRIPTION	DATE	APPROVED
	REVISIONS		

A/E GG DESIGN
GG DRAWN
REVIEW
QC
CHIEF ARCH./ ENGR.
PROJECT MANAGER
FIRE PROTECTION
BRANCH MANAGER
DESIGN DIRECTOR
EFD

GEE & JENSON
Engineers • Architects • Planners, Inc.
ONE HARVARD CIRCLE – WEST PALM BEACH, FLORIDA 33409 – EB 0002934 – AA C000655
A/E CONTRACT NO. 99-D-5091
APPROVED DATE
ACTIVITY – SATISFACTORY TO
APPROVED DATE 3 July 03
FOR EFD FOR COMMANDER NAVFAC

SEAL
JEFFREY L. HOLTZ • CERTIFICATE • STATE OF FLORIDA • REGISTERED ENGINEER

DEPARTMENT OF THE NAVY
NAVAL FACILITIES ENGINEERING COMMAND
ATLANTIC DIVISION
NAVAL STATION NORFOLK, VIRGINIA
U.S. NAVAL STATION GUANTANAMO BAY, CUBA
SUMP PUMPS
PIER A AND WHARVES B, T, AND U
STA. 13+50.00 TO STA. 16+20.00

CODE ID. NO. 80091	SIZE D
SCALE: AS NOTED	
EFD NO.	
STA. PROJ. NO.	
SPEC. NO. 05-00-4504	
CONSTR. CONTR. NO. N62470-00-C-4504	
NAVFAC DRAWING NO. 4407692	
SHEET C-7 OF	

8805C007
DRAWFORM REVISION 25 SEPT 96
REVDATE

8 7 6 5 4 3 2 1
D C B A

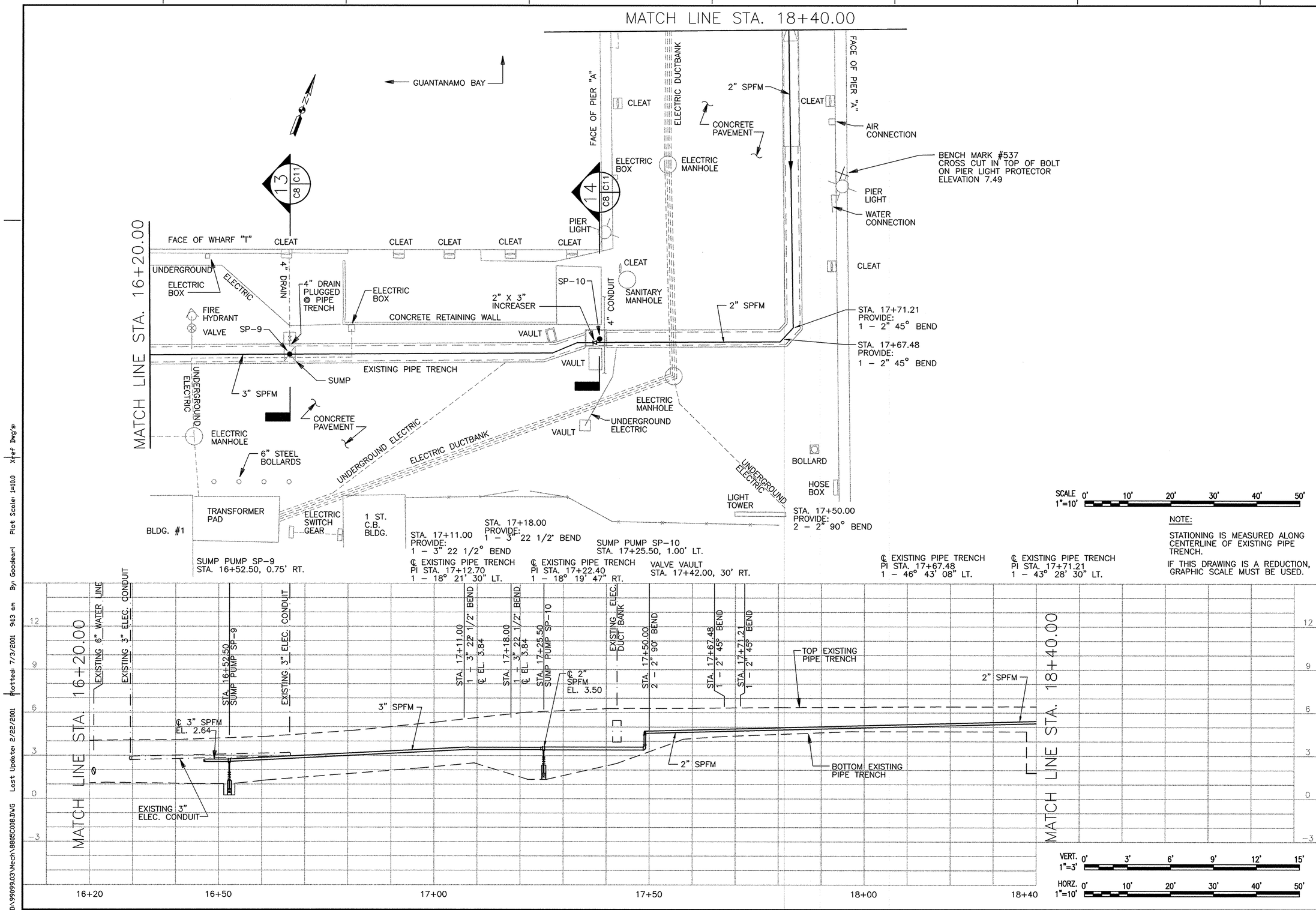

REVISIONS

STM.	DESCRIPTION	DATE	APPROVED

A/E CONTRACT NO. 62-D-5931

APPROVED

ACTIVITY – SATISFACTORY TO

APPROVED DATE 3 July 03

FOR CPT FOR COMMANDER NAVFAC

GEE & JENSON
Engineers • Architects • Planners, P.A.
250 JOHNSON STREET
PORT ST. LUCIE, FLORIDA 34983
PHONE: (772) 335-2000 FAX: (772) 335-2001
CERTIFICATE OF AUTHORIZATION NO. 00000396

DESIGN GG
DRAWN GG
REVIEW
QC
CHIEF ARCH./ ENGR.
PROJECT MANAGER
FIRE PROTECTION
BRANCH MANAGER
DESIGN DIRECTOR

DEPARTMENT OF THE NAVY
NAVAL FACILITIES ENGINEERING COMMAND
ATLANTIC DIVISION
NORFOLK, VIRGINIA
NAVAL STATION
U.S. NAVAL STATION GUANTANAMO BAY, CUBA
SUMP PUMPS
PIER A AND WHARVES B, T, AND U
STA. 16+20.00 TO STA. 18+40.00

CODE ID. NO. 80091 | SIZE D
SCALE: AS NOTED
EFD NO.
STA. PROJ. NO.
SPEC. NO. 05-00-4504
CONSTR. CONTR. NO. N62470-00-C-4504
NAVFAC DRAWING NO. 4407693
SHEET C-8 OF

8805C008

DRAWFORM REVISION 25 SEPT 96

REV/DATE

D:\99099.03\Mech\8805C008.DWG Last Update: 2/22/2001 Plotted: 7/3/2001 9:13 am By: Goodeart Plot Scale: 1=10.0 Xref Dwg's:

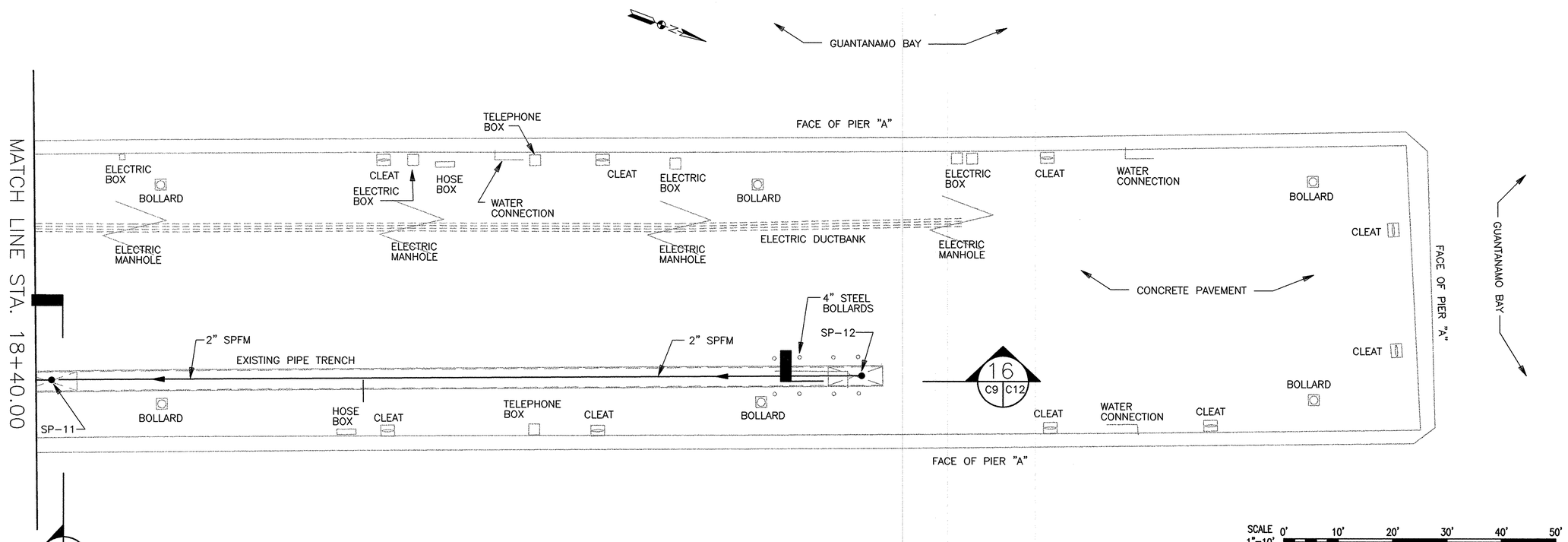

SUMP PUMP SP-11
STA. 18+42.50, 0.50' LT.

SUMP PUMP SP-12
STA. 19+91.50, 0.50' LT.

℄ EXISTING PIPE TRENCH
AT END STA. 19+95.32

SCALE 1"=10' 0' 10' 20' 30' 40' 50'

NOTE:

STATIONING IS MEASURED ALONG CENTERLINE OF EXISTING PIPE TRENCH.

IF THIS DRAWING IS A REDUCTION, GRAPHIC SCALE MUST BE USED.

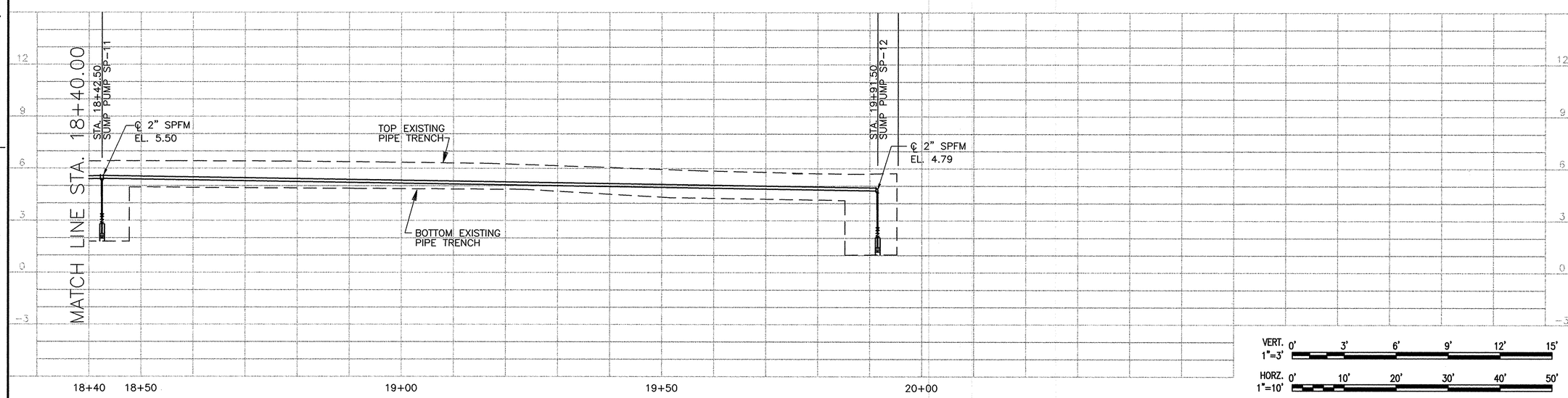

VERT. 1"=3' 0' 3' 6' 9' 12' 15'

HORZ. 1"=10' 0' 10' 20' 30' 40' 50'

REVISIONS			
DESCRIPTION	DATE	APPROVED	

A/E CONTRACT NO. 62470-00-C-4504

GEE & JENSON
ENGINEERS - ARCHITECTS - PLANNERS, P.A.
1545 RAYMOND DRIVE - WEST PALM BEACH, FL
TEL: (561) 640-4860 - FAX: (561) 640-4861

ACTIVITY - SATISFACTORY TO
APPROVED DATE 3 Jul 03
FOR EFD CDR COMMANDER NAVFAC

DESIGN GG
DRAWN GG
REVIEW
QC
CHIEF ARCH./ ENGR.
PROJECT MANAGER
FIRE PROTECTION
BRANCH MANAGER
DESIGN DIRECTOR

DEPARTMENT OF THE NAVY
NAVAL STATION
NAVAL FACILITIES ENGINEERING COMMAND
ATLANTIC DIVISION
NORFOLK, VIRGINIA

U.S. NAVAL STATION GUANTANAMO BAY, CUBA

SUMP PUMPS
PIER A AND WHARVES B, T, AND U
STA. 18+40.00 TO STA. 20+00.00

CODE ID. NO. 80091	SIZE D
SCALE: AS NOTED	
EFD NO.	
STA. PROJ. NO.	
SPEC. NO. 05-00-4504	
CONSTR. CONTR. NO. N62470-00-C-4504	
NAVFAC DRAWING NO. 4407694	
SHEET C-9	OF

8805C009

DRAWFORM REVISION 25 SEPT 96

REVDATE

D:\99099.03\Mech\8805C009.DWG Last Update: 2/22/2001 Plotted: 7/3/2001 9:13 am By: Goodeart Plot Scale: 1=10.0 Xref Dwg's:

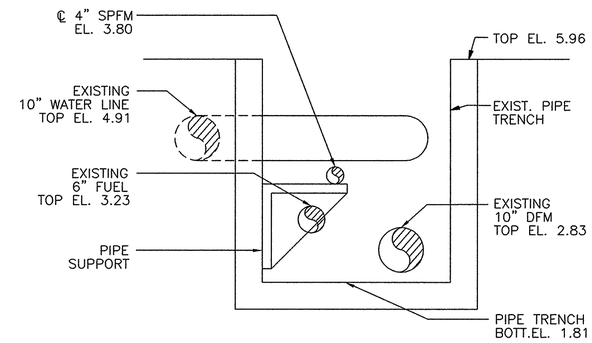

1 SECTION 1A (C2 C10)
SCALE: 3/4" = 1'-0"

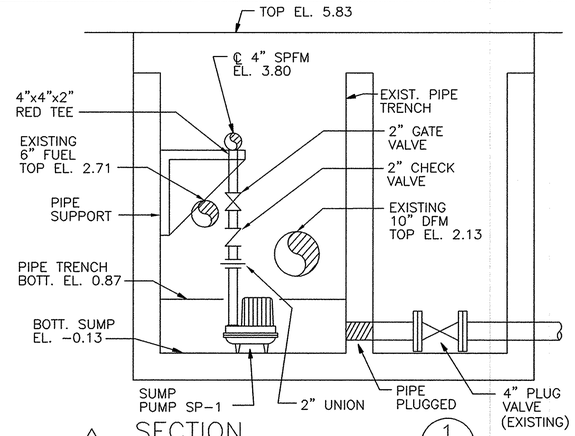

1 SECTION 1 (C2 C10)
SCALE: 3/4" = 1'-0"

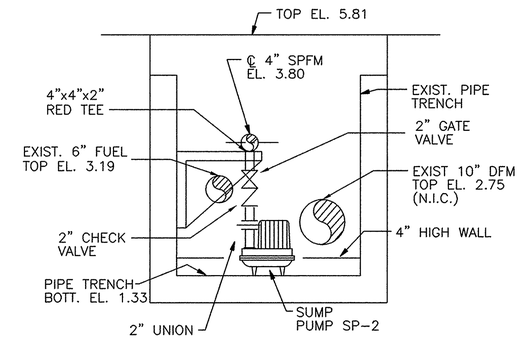

1 SECTION 2 (C2 C10)
SCALE: 3/4" = 1'-0"

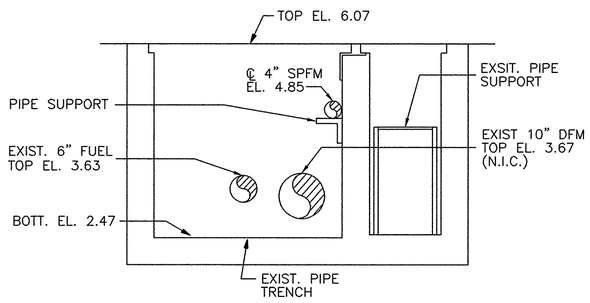

1 SECTION 3 (C3 C10)
SCALE: 3/4" = 1'-0"

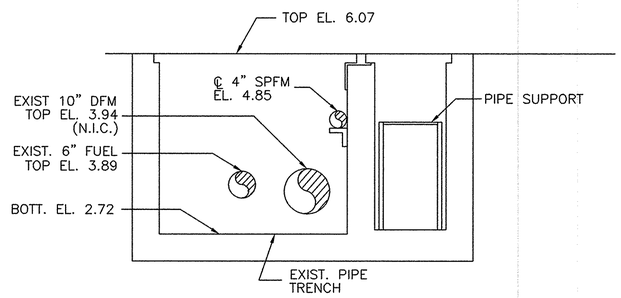

1 SECTION 4 (C4 C10)
SCALE: 3/4" = 1'-0"

IF THIS DRAWING IS A REDUCTION, GRAPHIC SCALE MUST BE USED

3/4"=1'-0" 4' 0 4'

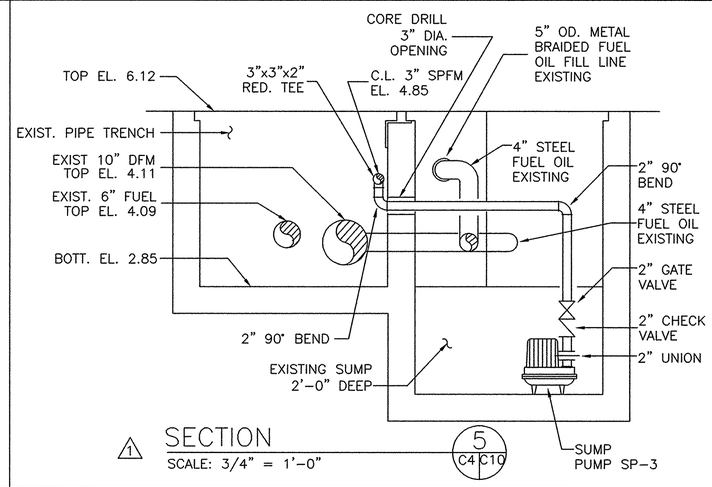

1 SECTION 5 (C4 C10)
SCALE: 3/4" = 1'-0"

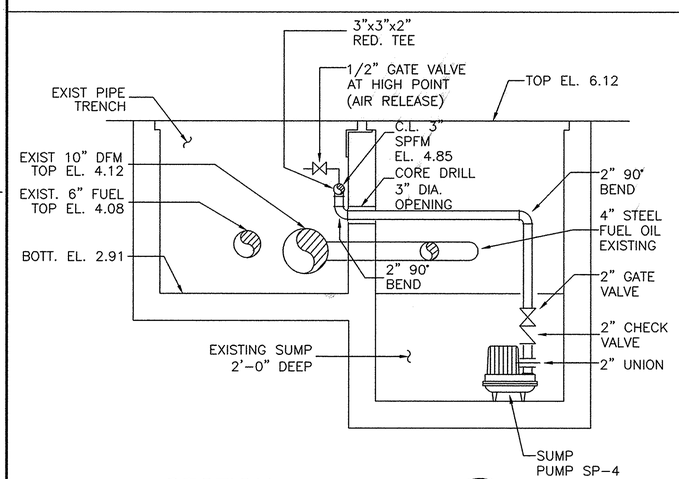

1 SECTION 6 (C4 C10)
SCALE: 3/4" = 1'-0"

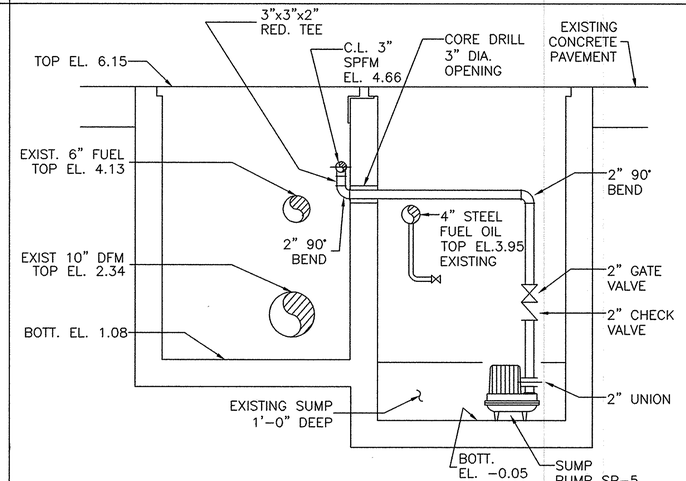

1 SECTION 7 (C5 C10)
SCALE: 3/4" = 1'-0"

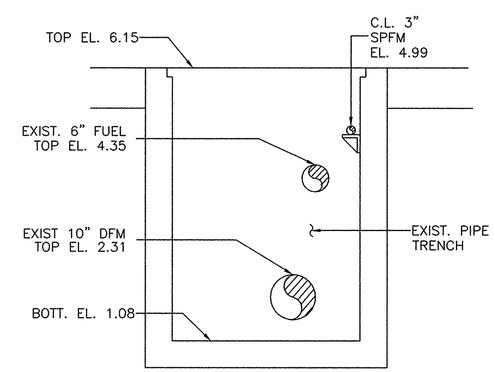

1 SECTION 8 (C5 C10)
SCALE: 3/4" = 1'-0"

1	REVISION NO. 1 (BASED ON FIELD VERIFICATION)	6/17/03	
SYM.	DESCRIPTION	DATE	APPROVED

REVISIONS

A/E CO. DESIGN
CO. DRAWN
REVIEW
QC
CHIEF ARCH/ ENGR
PROJECT MANAGER
FIRE PROTECTION
BRANCH MANAGER
DESIGN DIRECTOR

GEE & JENSON
Engineers • Architects • Planners, Inc.
750 Main Street, Suite 1603, Hartford, CT 06103
Fax (860) 548-1090 • Tel (860) 548-1000

A/E CONTRACT NO. 39-D-5081
APPROVED DATE
ACTIVITY – SATISFACTORY TO
APPROVED DATE
FOR EFD / CLC COMMANDER INITIAL

RICHARD J. HOLTZ
CERTIFICATE NO. PE-004079
STATE OF CONNECTICUT
REGISTERED PROFESSIONAL ENGINEER
SEAL

DEPARTMENT OF THE NAVY
NAVAL FACILITIES ENGINEERING COMMAND
ATLANTIC DIVISION
NORFOLK, VIRGINIA
NAVAL STATION
U.S. NAVAL STATION
GUANTANAMO BAY, CUBA

SUMP PUMPS PIER A AND WHARVES B, T, AND U

SECTIONS

CODE ID. NO. 80091	SIZE D
SCALE: AS NOTED	
EFD NO.	
STA. PROJ. NO.	
SPEC. NO. 05-00-4504	
CONSTR. CONTR. NO. N62470-00-C-4504	
NAVFAC DRAWING NO. 4407695	
SHEET C-10	OF

8805c010
DRAWFORM REVISION 25 SEPT 96

REVDATE

\\Black-405\Burn To CD\U5004504_drawings\8805c010.dwg Last Update: 2/14/2001 Plotted: 2/22/2001 5:03 pm By: goodeart Plot Scale: 1=1.0 Xref Dwg's:

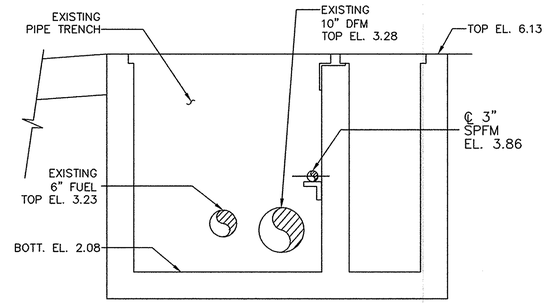

SECTION 9 (C4 | C11)
SCALE: 3/4" = 1'-0"

IF THIS DRAWING IS A REDUCTION, GRAPHIC SCALE MUST BE USED

3/4"=1'-0" 4' 0 4'

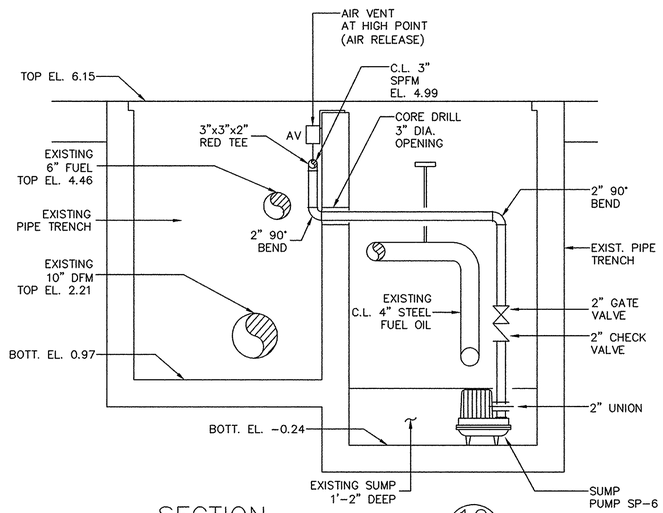

SECTION 10 (C6 | C11)
SCALE: 3/4" = 1'-0"

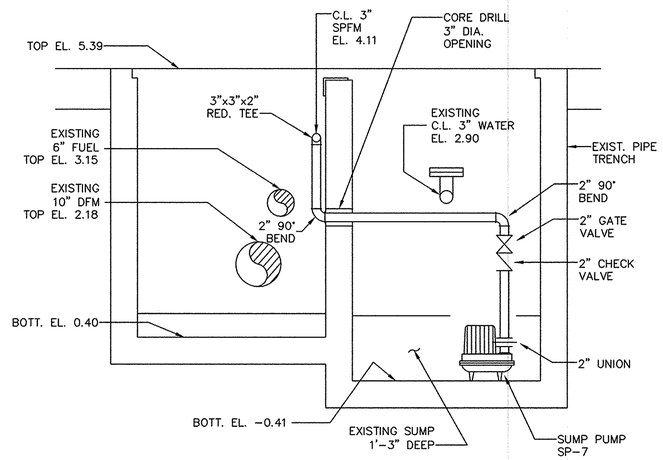

SECTION 11 (C6 | C11)
SCALE: 3/4" = 1'-0"

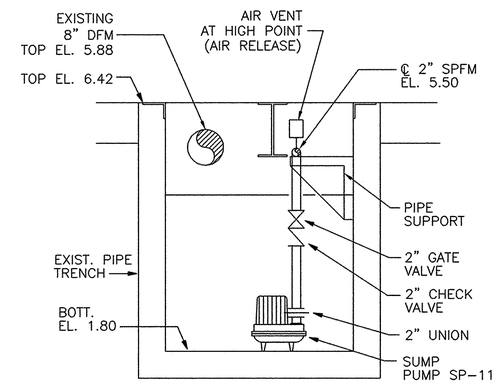

SECTION 12 (C9 | C11)
SCALE: 3/4" = 1'-0"

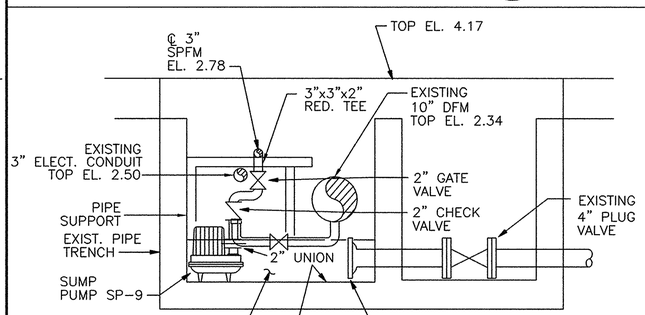

SECTION 13 (C8 | C11)
SCALE: 3/4" = 1'-0"

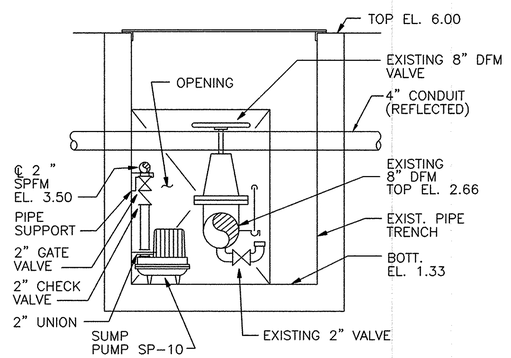

SECTION 14 (C8 | C11)
SCALE: 3/4" = 1'-0"

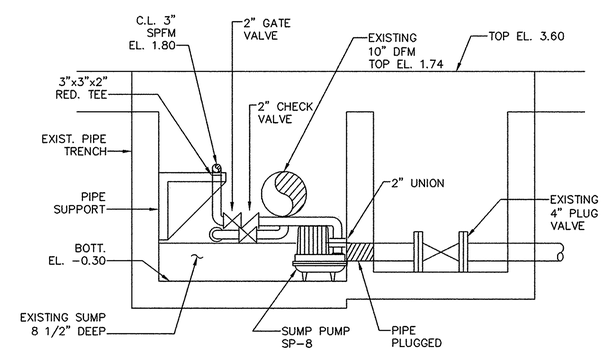

SECTION 15 (C7 | C11)
SCALE: 3/4" = 1'-0"

NO.	REVISION NO. 1 (BASED ON FIELD VERIFICATION)	6/17/03
1		

SYM.	DESCRIPTION	DATE	APPROVED

REVISIONS

A/E CO. GG DESIGN
GG DRAWN
REVIEW
QC
CHIEF ARCH./ ENGR.
PROJECT MANAGER
FIRE PROTECTION
BRANCH MANAGER
DESIGN DIRECTOR

GEE & JENSON
Engineers • Architects • Planners, Inc.
Richmond, VA • Tampa, FL • Washington, DC
A/E CONTRACT NO. 91-D-5091 — TO 0005A • JJ 0006A

APPROVED DATE
ACTIVITY – SATISFACTORY TO
APPROVED DATE 3/6/03
FOR EFD FOR COMMANDER NAVFAC

SEAL: REGISTERED PROFESSIONAL ENGINEER — PE-004077 — STATE OF VIRGINIA — REGISTRATION EXPIRES 31 DEC 03

DEPARTMENT OF THE NAVY — NAVAL FACILITIES ENGINEERING COMMAND
ATLANTIC DIVISION — NORFOLK, VIRGINIA
NAVAL STATION — U.S. NAVAL STATION — GUANTANAMO BAY, CUBA

SUMP PUMPS PIER A AND WHARVES B, T, AND U

SECTIONS

CODE ID. NO. 80091	SIZE D
SCALE: AS NOTED	
EFD NO.	
STA. PROJ. NO.	
SPEC. NO. 05-00-4504	
CONSTR. CONTR. NO. N62470-00-C-4504	
NAVFAC DRAWING NO. 4407696	
SHEET C-11	OF

8805c011
DRAWFORM REVISION 25 SEPT 96

REVDATE

\\Block-405\Burn To CD\05004504_drawings\8805c011.dwg Last Update: 2/14/2001 Plotted: 2/22/2001 5:04 pm By: goodeg1 Plot Scale: 1=1.0 Xref Dwgs:

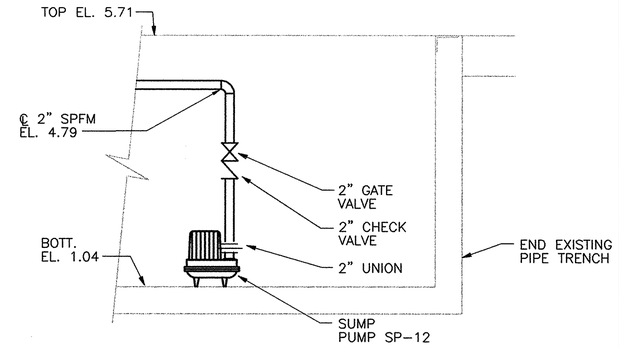

SECTION 16 (C9|C12)
SCALE: 3/4" = 1'-0"

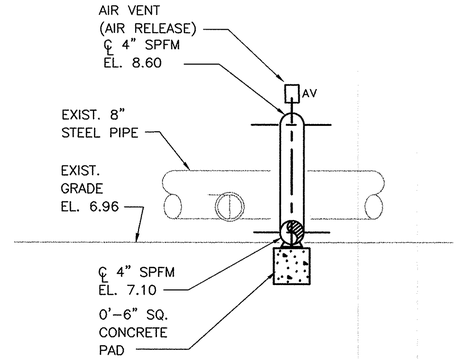

SECTION 17 (C1|C12)
SCALE: 3/4 = 1'-0"

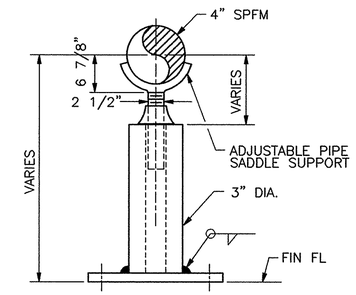

ADJUSTABLE PIPE SUPPORT (A|C12|C12)
NOT TO SCALE

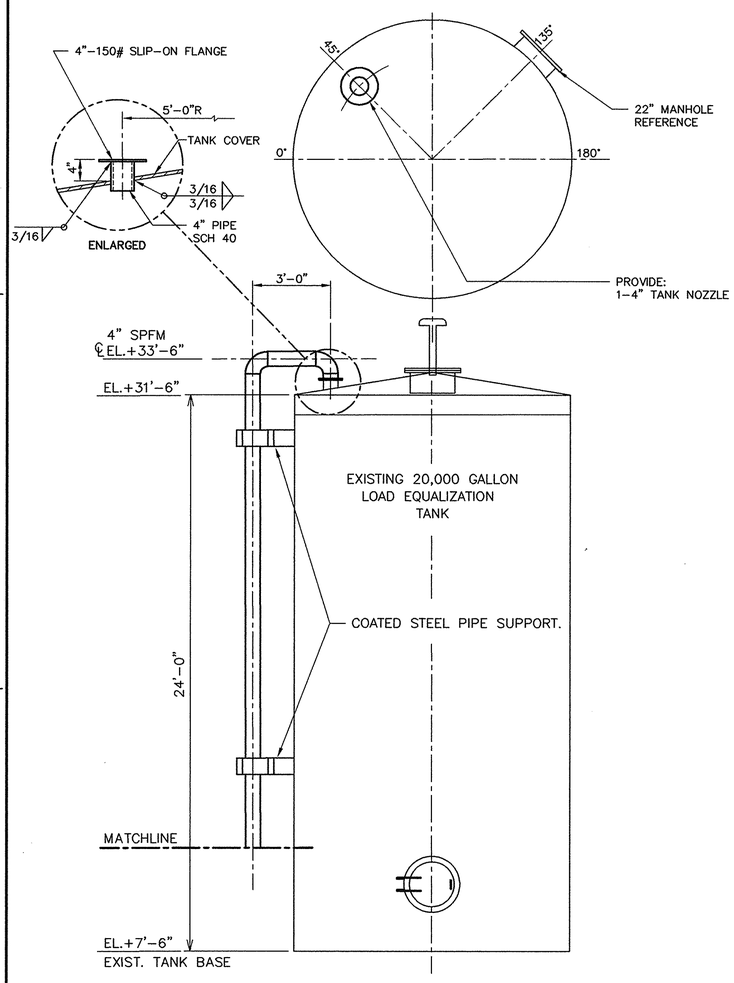

LOAD EQUALIZATION TANK ELEVATION (19|C1|C12)
NOT TO SCALE

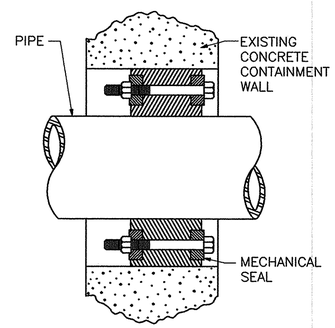

PIPE PENETRATION DETAIL (B|C10,C12|C12)
NOT TO SCALE

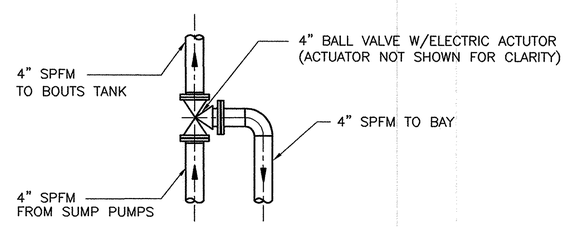

PLAN

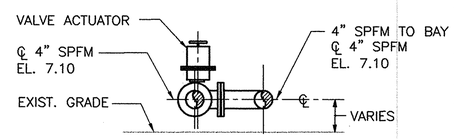

ELEVATION

DETAIL 18 (C1|C12)
SCALE: 3/4" = 1'-0"

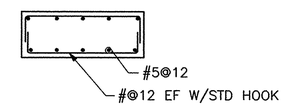

SECTION 2 (C12|C12)

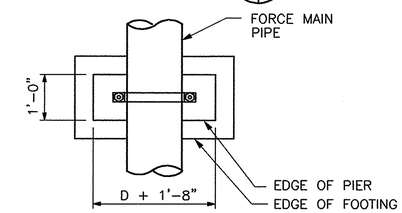

PLAN

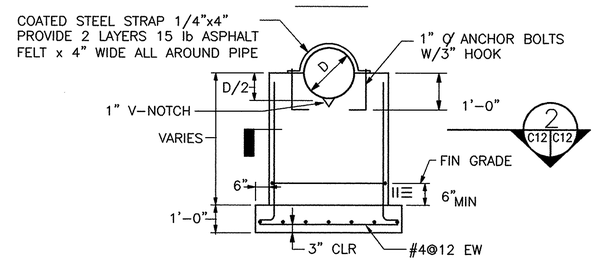

ELEVATION

STANDARD DRY LAND PIPE SUPPORT PIER
NOT TO SCALE

IF THIS DRAWING IS A REDUCTION, GRAPHIC SCALE MUST BE USED
3/4"=1'-0" 4' 0 4'

REVISIONS				
STM.	DESCRIPTION	DATE	APPROVED	

A/E CGS DESIGN
CGS DRAWN
REVIEW
QC
CHIEF ARCH./ ENGR.
PROJECT MANAGER
FIRE PROTECTION
BRANCH MANAGER
DESIGN DIRECTOR

GEE & JENSON
ENGINEERS-ARCHITECTS-PLANNERS, INC.
PE, SURVEYING DIVISION - WEST PALM BEACH
PE, ARCHITECTURE - W. PALM BEACH - FT. LAUDERDALE

A/E CONTRACT NO. 93-E-5091 DATE
APPROVED
ACTIVITY - SATISFACTORY TO DATE
APPROVED
FOR EFD FOR COMMENTS WORK

DEPARTMENT OF THE NAVY
NAVAL STATION
NAVAL FACILITIES ENGINEERING COMMAND
ATLANTIC DIVISION
NORFOLK, VIRGINIA
U.S. NAVAL STATION GUANTANAMO BAY, CUBA
SUMP PUMPS
PIER A AND WHARVES B, T, AND U
SECTIONS

CODE ID. NO. 80091 SIZE D
SCALE: AS NOTED
EFD NO.
STA. PROJ. NO.
SPEC. NO. 05-00-4504
CONSTR. CONTR. NO. N62470-00-C-4504
NAVFAC DRAWING NO. 4407697
SHEET OF
C-12

8805C012
DRAWFORM REVISION 25 SEPT 96

D:\99099.03\Mech\8805C012.DWG Last Update: 2/27/2001 Plotted: 7/3/2001 9:13 am By: Goodeart Plot Scale: 1=1.0 X-ref Dwg's:

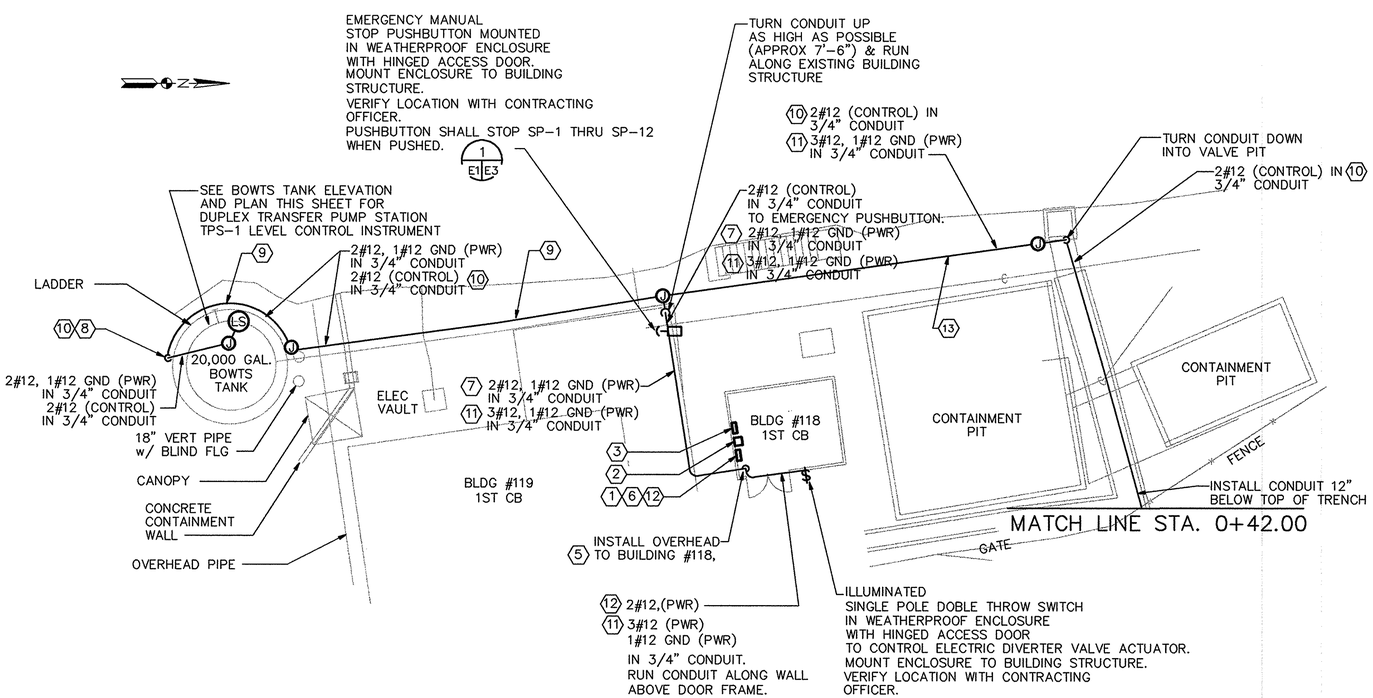

SITE PLAN BOWTS AREA

SCALE: 1" = 10'

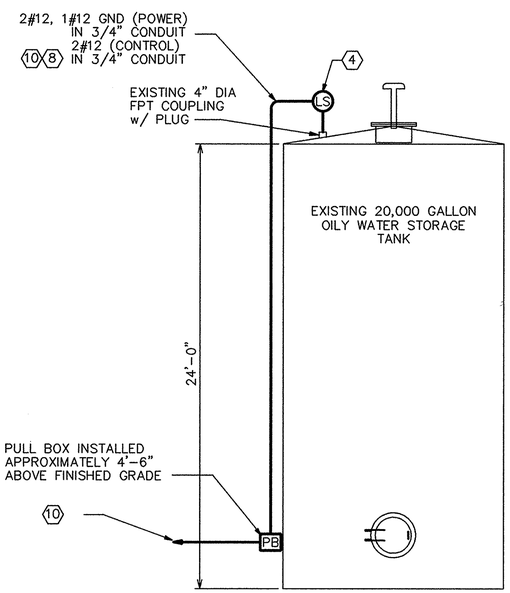

BOWTS TANK ELEVATION

NOT TO SCALE

EXISTING STORAGE TANK LEVEL INSTRUMENT FITTINGS				
	ITEM	QTY	NAME	DESCRIPTION
	1	1	VENT	3" DIA FPT COUPLING
	2	1	MANHOLE	24" DIA MANHOLE w/ LONG BOLT & COVER
*	3	1	SPARE	4" DIA FPT COUPLING w/ PLUG
	4	2	BOLT FLANGE	3" DIA SLIP-ON FLANGE/LEVEL INSTRUMENT
	5	1	COUPLING	1" DIA FULL COUPLING/LEVEL INSTRUMENT
	6	1	COUPLING	1" DIA FULL COUPLING/SPARE

* SEE KEYED NOTE 4

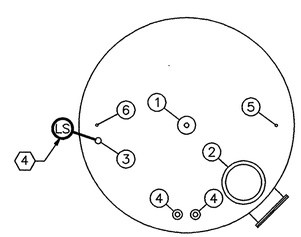

BOWTS TANK PLAN

NOT TO SCALE

ABBREVIATIONS

A,AMP	AMPERE
BFG	BELOW FINISHED GRADE
BLDG	BUILDING
C	CONDUIT
CKT	CIRCUIT
D	DEEP
DIA	DIAMETER
DWG	DRAWING
FPT	FEMALE PIPE THREADS
GND	GROUND
H	HIGH
HP	HORSEPOWER
OW/WO	OILY WASTE/WASTE OIL
P	POLE
PH	PHASE
PWR	POWER
RMS	ROOT MEANS SQUARED
SP	SUMP PUMP
SPFM	SUMP PUMP FORCE MAIN
SYM	SYMETRICAL
TPFM	TRANSFER PUMP FORCE MAIN
TPS	TRANSFER PUMP STATION
V	VOLTS
W	WIDTH, WIRE
W/	WITH
3/C	3-CONDUCTOR

GENERAL NOTES:

1. THE FOLLOWING AREAS SHALL BE CONSIDERED AS HAZARDOUS AREAS AND ALL ELECTRICAL WORK IN THESE AREAS SHALL COMPLY WITH THE REQUIREMENTS OF ARTICLES 500 AND 501 OF THE NATIONAL ELECTRICAL CODE FOR CLASS 1, DIVISION 1, GROUPS C & D AREAS: BOWTS AREA, 20,000 GALLON BOWTS TANK, BUILDING #118 AND PIPE TRENCH.
2. THESE PLANS SHOW THE ROUTING AND ELEVATIONS OF CONDUITS TO BE INSTALLED IN THE EXSITING PIPE TRENCH. HOWEVER, BEFORE INSTALLING CONDUITS, COORDINATE WITH OTHER TRADES THE EXACT LOCATIONS OF PIPING, PIPE SUPPORTS AND OTHER EQUIPMENT TO BE INSTALLED IN THE TRENCH. MAKE ADJUSTMENTS IN CONDUIT ROUTING AS REQUIRED TO AVOID CONFLICTS WITH THE WORK OF OTHER TRADES.
3. NEW JUNCTION BOXES AND RECEPTACLES TO BE INSTALLED IN EXISTING PIPING TRENCH SHALL BE ACCESSIBLE PER THE NATIONAL ELECTRICAL CODE.

KEYED NOTES

1. EXISTING CROUSE-HINDS D2L SERIES, CLASS 1, DIVISION 2, GROUP C & D, 208Y/120 VOLTS, 3 PHASE, 4 WIRE, 40 CIRCUIT, 100 AMP POWER PANEL. ENCLOSURE #D2LC, CAT No. D2LC324G-01330-03315-06120-02120G-04115-3M100-1-5752.
2. EXISTING DRY-TYPE TRANSFORMER, 480 VOLTS-208Y/120 VOLTS, 3 PHASE, 45-kVA.
3. EXISTING CROUSE-HINDS D2D SERIES, NEMA TYPE 4, CLASS 1, DIVISION 2, GROUP C & D, 480Y/277 VOLTS, 3 PHASE, 4 WIRE, 30 CIRCUIT, 100 AMP POWER PANEL.
4. PROVIDE FLOAT SWITCH SENSING UNIT INCLUDING ALL INSTALLATION HARDWARE TO INSTALL NEW INSTRUMENT ON EXISTING 4" DIAMETER FPT FITTING.
5. TURN 120 VOLT POWER SUPPLY CONDUIT DOWN TO EXISTING CROUSE-HINDS CLASS 1, DIVISION 1, JUNCTION BOX BELOW 208Y/120 VOLT PANELBOARD, EXTEND CONDUCTORS UP THROUGH EXISTING NIPPLES FROM JUNCTION BOX TO NEW CIRCUIT BREAKER IN PANELBOARD.
6. PROVIDE 20 AMP, SINGLE POLE CIRCUIT BREAKER IN PANELBOARD SPACE #17 (EXISTING SPACE) FOR FLOAT SWITCH SENSING UNIT.
7. PROVIDE 2#12, 1#12 GND (POWER) IN 3/4" CONDUIT FROM EXISTING 208Y/120V PANELBOARD IN BUILDING #118 TO NEW FLOAT SWITCH LEVEL INSTRUMENT ON TOP OF EXISTING BOWTS TANK. CONDUIT SHALL BE INSTALLED ALONG ROUTE INDICATED.
8. TURN LEVEL SENSING CONTROL CONDUIT DOWN SIDE OF TANK ON EXISTING CONDUIT SUPPORTS. EXISTING SUPPORTS ARE LIGHT WEIGHT CHANNEL. PROVIDE 2#12, 1#12 GND (POWER) IN 3/4" CONDUIT & 2#12 (CONTROL) IN 3/4" CONDUIT. FROM LEVEL INSTRUMENT TO OUTSIDE OF BUILDING 118. CONTROL WIRING SHALL CONTINUE ON IN 3/4" CONDUIT AS JUNCTION BOX INDICATED TO SP-1 TO SP-2 CONTROL CONTACTOR (SEE E-2 FOR CONTACTOR LOCATION), SP-3 THRU SP-6 CONTROL CONTACTOR (SEE E-4 FOR CONTACTOR LOCATION) AND SP-7 THRU SP-12 CONTROL CONTACTOR (SEE E-9 FOR CONTACTOR LOCATION).
9. INSTALL CONDUIT ALONG CONCRETE BASE OF TANK AND THEN TURN UP AND INSTALL PARALLEL WITH NEW 4" SPFM PIPING SHOWN ON CIVIL DRAWINGS.
10. CONTROL WIRING SHALL CONTINUE ON IN 3/4" CONDUIT AS JUNCTION BOX INDICATED TO SP-1 TO SP-2 CONTROL CONTACTOR (SEE E-2 FOR CONTACTOR LOCATION), SP-3 THRU SP-6 CONTROL CONTACTOR (SEE E-4 FOR CONTACTOR LOCATION) AND SP-7 THRU SP-12 CONTROL CONTACTOR (SEE E-9 FOR CONTACTOR LOCATION).
11. PROVIDE 3#12, 1#12 GND (POWER) IN 3/4" CONDUIT FROM SINGLE POLE DOBLE THROW SWITCH TO JUNCTION BOX CLOSER TO ELECTRIC DIVERTER VALVE. CONDUIT SHALL BE INSTALLED ALONG ROUTE INDICATED.
12. PROVIDE 20 AMP, SINGLE POLE CIRCUIT BREAKER IN PANELBOARD SPACE #20 (EXISTING SPACE) IN EXISTING 208Y/120V PANELBOARD IN BUILDING #118, FOR SINGLE POLE DOBLE THROW SWITCH TO CONTROL ELECTRIC DIVERTER VALVE.
13. INSTALL CONDUIT ABOVE GRADE PARALLEL WITH NEW 4" SPFM PIPING SHOWN ON CIVIL DRAWINGS.

LEGEND

- LS FLOAT SWITCH SENSING UNIT
- J JUNCTION BOX
- PB PULL BOX
- PANEL, TYPE AS INDICATED
- M MOTOR

IF THIS DRAWING IS A REDUCTION, GRAPHIC SCALE MUST BE USED

1"=10' 0' 10' 20' 30' 40' 50'

REVISIONS				
SYM	DESCRIPTION	DATE	APPROVED	

EGD
J.K.B. DESIGN
L.J.S. DRAWN
J.M.K. REVIEW
CC CHIEF ARCH. / ENGR.
PROJECT MANAGER
FIRE PROTECTION
BRANCH MANAGER
DESIGN DIRECTOR

GEE & JENSON
Engineers • Architects • Planners, Inc.
Harbour Square, 400 S. Orange Ave., Suite 1000, Orlando, FL 32801

A/E CONTRACT NO. 93-D-5001
APPROVED DATE
ACTIVITY - SATISFACTORY TO
APPROVED DATE 3/21/02
FOR EFD FIRE COMMANDER ONLY

SEAL

DEPARTMENT OF THE NAVY
NAVAL STATION
ATLANTIC DIVISION
NAVAL FACILITIES ENGINEERING COMMAND
NORFOLK, VIRGINIA
U.S. NAVAL STATION GUANTANAMO BAY, CUBA
PIER A AND WHARVES B, T, AND U SUMP PUMPS
BOWTS AREA - ELECTRICAL SITE PLAN

CODE ID. NO. 80091	SIZE D
SCALE:	
EFD NO.	
STA. PROJ. NO.	
SPEC. NO. 05-00-4504	
CONSTR. CONTR. NO. N62470-00-C-4504	
NAVFAC DRAWING NO. 4407698	
SHEET E-1 OF	

8805E001
DRAWFORM REVISION 25

D:\99099.03\Elec\8805E001.DWG Last Update: 7/10/2001 Plotted: 7/10/2001 11:51 am By: Goodeart Plot Scale: 1=10.0 Xref Dwg's:

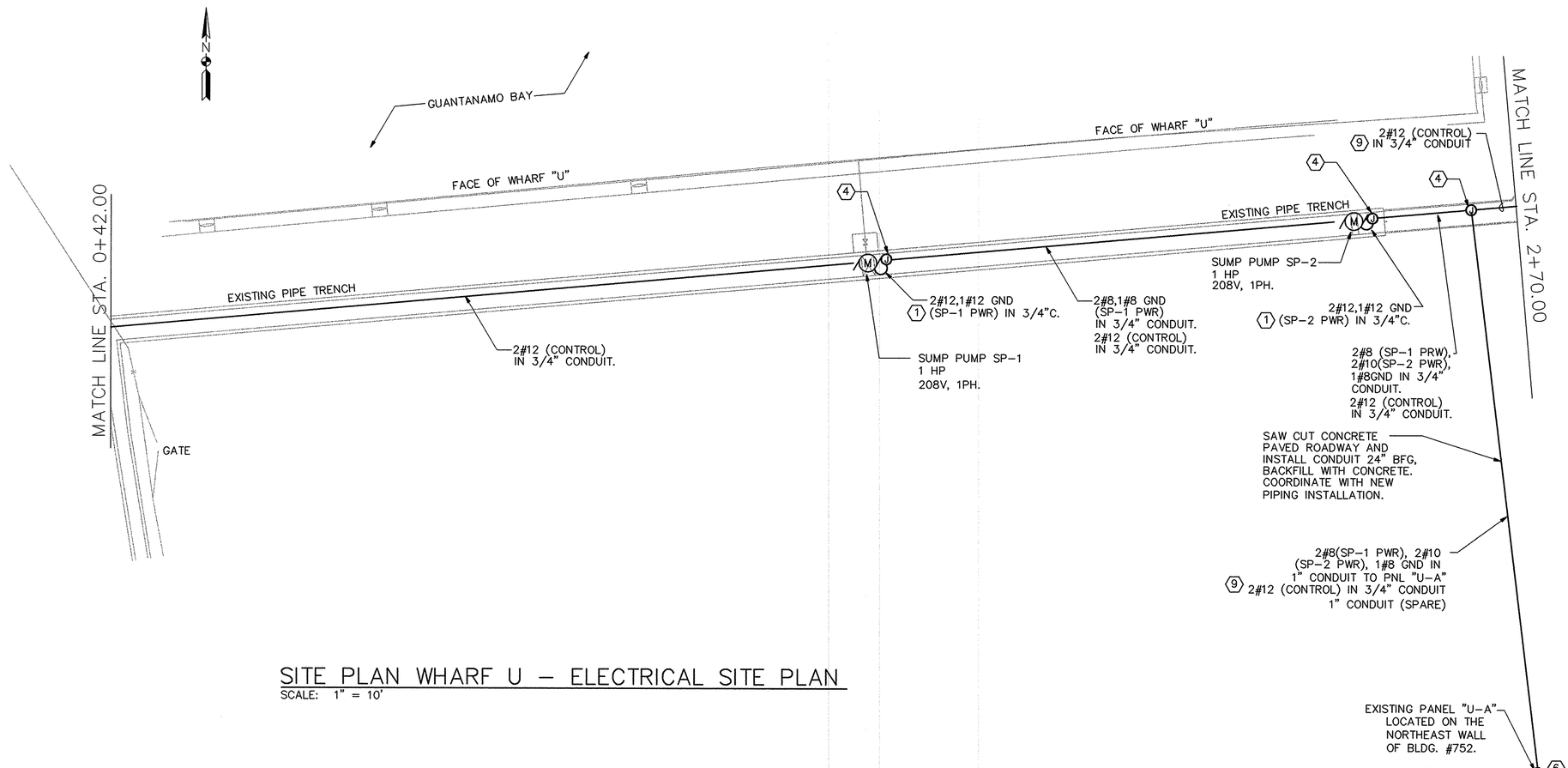

SITE PLAN WHARF U – ELECTRICAL SITE PLAN

SCALE: 1" = 10'

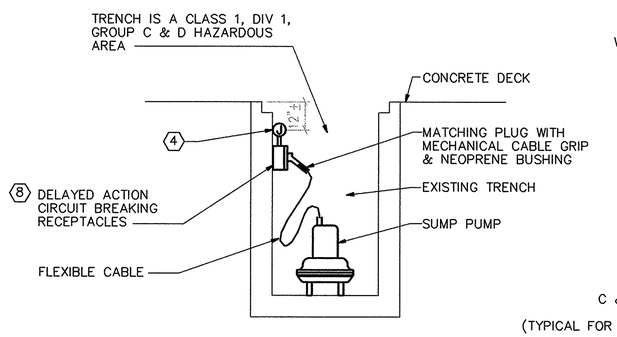

SUMP PUMP SP-1 ELECTRICAL CONNECTION DETAIL (TYPICAL FOR SP-2 THRU SP-12)

NO SCALE

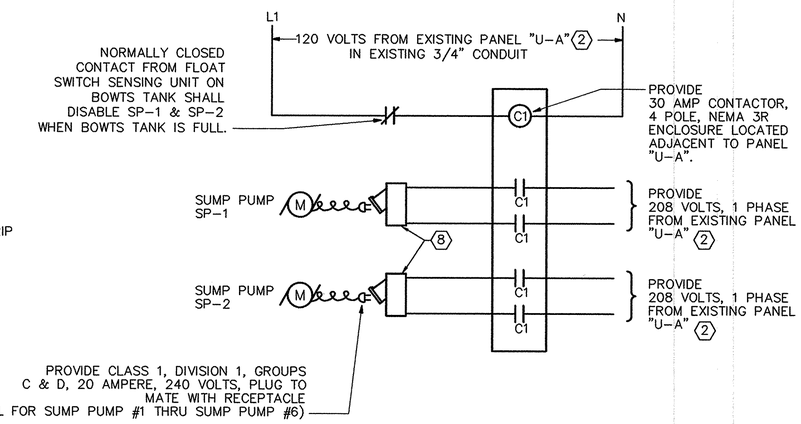

WHARF U SUMP PUMP CONTROL DIAGRAM

NO SCALE

KEYED NOTES

1. TERMINATE CIRCUIT IN SUMP PUMP RECEPTACLE. SEE "SUMP PUMP SP-1 ELECTRICAL CONNECTION DETAIL (TYPICAL FOR SP-2 THRU SP-12) ON THIS SHEET.
2. PROVIDE 2-2 POLE, 20 AMP CIRCUIT BREAKERS IN NEW POWER PANEL "U-A". PROVIDE 1-SINGLE POLE, 20-AMP CIRCUIT BREAKER IN EXISTING POWER PANEL TO FEED SUMP PUMP CONTROLS CONTACTOR. CONTRACTOR TO FIELD VERIFY FOR LOCATION OF AVAILABLE SPACES IN EXISTING PANEL "U-A".
3. NOT USED
4. PROVIDE CLASS 1, DIV 1, GROUPS C & D JUNCTION BOX.
5. NOT USED
6. EXISTING PANEL LOCATED ON THE NORTHEAST WALL OF BLDG.#752. FIELD VERIFY EXACT LOCATION WITH PUBLIC WORKS DEPARTMENT, GTMO-CUBA.
7. PROVIDE SUMP PUMP SP-1 & SP-2 CONTROL CONTACTOR ADJACENT TO PANEL"U-A" SEE CONTROL DIAGRAM ON THIS SHEET. FIELD VERIFY EXACT LOCATION WITH PUBLIC WORKS DEPARTMENT, GTMO-CUBA.
8. PROVIDE CLASS 1, DIVISION 1, GROUPS C & D, 20 AMPERE, 240 VOLTS, FACTORY SEALED, DELAYED ACTION CIRCUIT BREAKING RECEPTACLE (TYPICAL FOR SUMP PUMP #1 THRU SUMP PUMP #6)
9. 2#12 CONTROL CONDUCTORS IN 3/4" CONDUIT FROM FLOAT SWITCH SENSING UNIT ON BOWTS TANK.

LEVEL SENSOR ON BOWTS TANK SHALL

IF THIS DRAWING IS A REDUCTION, GRAPHIC SCALE MUST BE USED

1"=10' 0' 10' 20' 30' 40' 50'

REVISIONS

DESCRIPTION	DATE	APPROVED

A/E: J.T.B. DESIGN; J.T.S. DRAWN; J.M.S. REVIEW
QC; CHIEF ARCH/ ENGR.; PROJECT MANAGER; FIELD PM INSPECTOR; DESIGN DIRECTOR

GEE & JENSON Engineers-Architects-Planners, P.A. 750 ALMONASTER AVENUE • WEST PALM BEACH, FLORIDA 33401 • (561) 832-3883 • LB 0000265

A/E CONTRACT NO. 38-J2-3081 APPROVED DATE

ACTIVITY – SATISFACTORY TO APPROVED DATE 3/26/02

FOR EFD, FOR COMMANDER, NAVFAC

DEPARTMENT OF THE NAVY — NAVAL FACILITIES ENGINEERING COMMAND
NAVAL STATION — ATLANTIC DIVISION — NORFOLK, VIRGINIA
U.S. NAVAL STATION — GUANTANAMO BAY, CUBA

SUMP PUMPS PIER A AND WHARVES B, T, AND U

STA.0+42.00 TO STA.2+70.00

CODE ID. NO. 80091 | SIZE D
SCALE:
EFD NO.
STA. PROJ. NO.
SPEC. NO. 05-00-4504
CONSTR. CONTR. NO. N62470-00-C-4504
NAVFAC DRAWING NO. 4407699
SHEET OF
E-2

8805E002

D:\99999\03\Elec\8805E002.DWG Last Update: 2/21/2001 Plotted: 7/10/2001 11:51 am By: Goodear Plot Scale: 1=10.0 Xref Dwg's:

THIS SCHEMATIC IS NOT TO BE USED AS A POINT TO POINT WIRING DIAGRAM. CONTRACTOR SHALL PROVIDE COMPLETE WIRING DIAGRAM TO SHOW ALL WIRING AND EQUIPMENT NECESSARY TO ACCOMPLISH SEQUENCE AS DESCRIBED ELSEWHERE IN DOCUMENTS.
SIMILAR DIAGRAMS ARE APPLICABLE FOR SP-3 THRU SP-6 AND SP-7 THRU SP-12 EMERGENCY STOP CONTROLS. EMERGENCY PUSHBUTTON SHALL STOP SP-1 THRU SP-12 WHEN PUSHED.

1 SUMP PUMPS SP-1 AND SP-2 EMERGENCY STOP CONTROL SCHEMATIC

E1 E3 NO SCALE

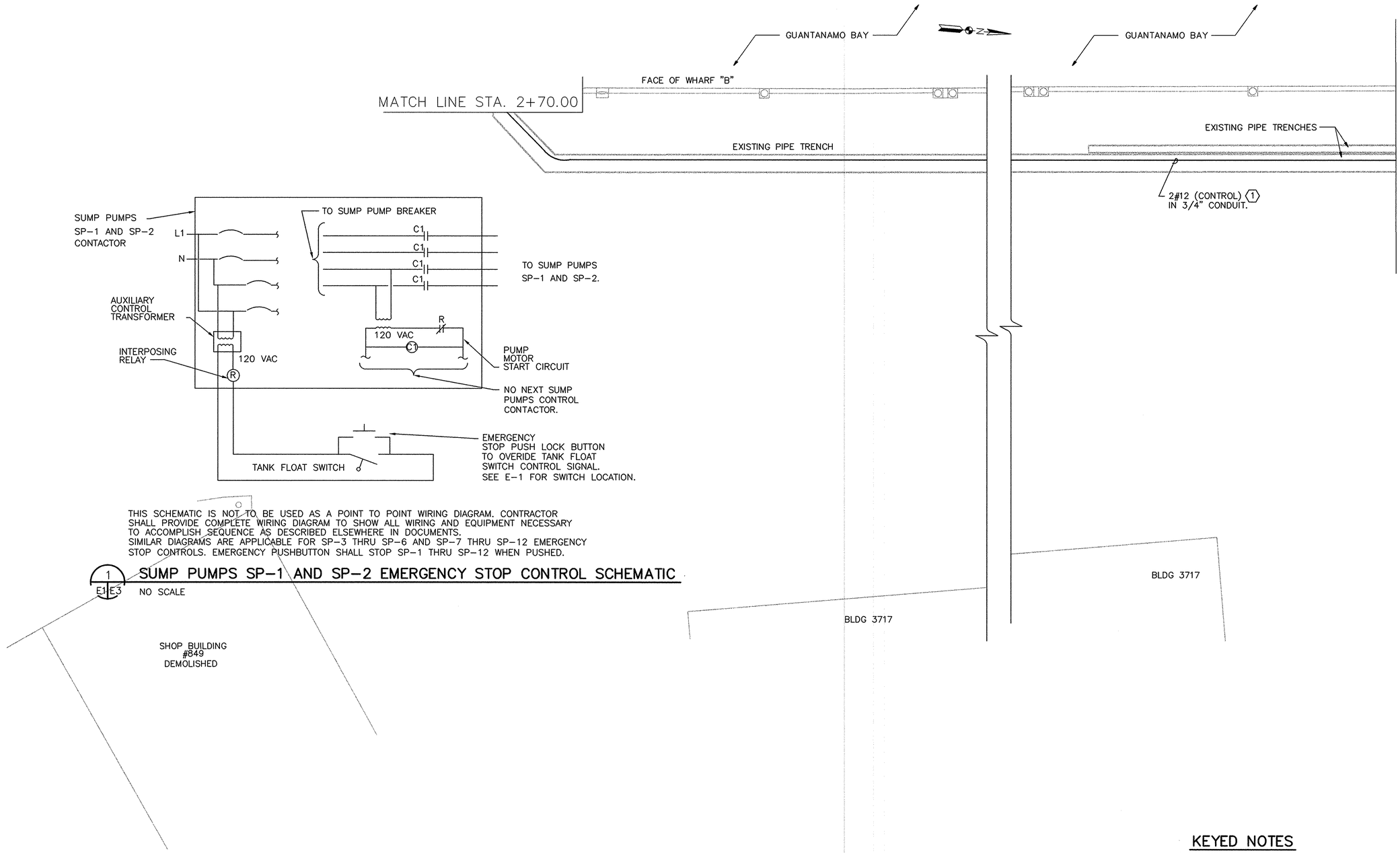

PARTIAL SITE PLAN WHARF B

SCALE: 1" = 10'

KEYED NOTES

1. 2#12 CONTROL CONDUCTORS IN 3/4" CONDUIT FROM FLOAT SWITCH SENSING UNIT ON BOWTS TANK.

IF THIS DRAWING IS A REDUCTION, GRAPHIC SCALE MUST BE USED

1"=10' 0' 10' 20' 30' 40' 50'

REVISIONS

DESCRIPTION	DATE	APPROVED

A/E T.T.B DESIGN
T.T.S DRAWN
T.M.K REVIEW
QC
CHIEF ARCH/ ENGR.
PROJECT MANAGER
FIRE PROTECTION
BRANCH MANAGER
DESIGN DIRECTOR

GEE & JENSON
ENGINEERS-ARCHITECTS-PLANNERS, P.C.
750 JAMISON ROAD - ELIZABETH, PA. 15037
(412) 384-7200 - FAX (412) 384-7200
PA. CERTIFICATE OF AUTHORIZATION No. 24GA100024600
A/E CONTRACT NO. 93-D-5021

APPROVED DATE
ACTIVITY - SATISFACTORY TO
APPROVED DATE 3-7-03
FOR EFD / EFA COMMANDER NAVFAC

SEAL

DEPARTMENT OF THE NAVY
NAVAL FACILITIES ENGINEERING COMMAND
ATLANTIC DIVISION
NORFOLK, VIRGINIA
NAVAL STATION
U.S. NAVAL STATION GUANTANAMO BAY, CUBA
SUMP PUMPS
PIER A AND WHARVES B, T, AND U
STA.2+70.00 TO STA.5+40.00

CODE ID. NO. 80091 SIZE D
SCALE:
EFD NO.
STA. PROJ. NO.
SPEC. NO. 05-00-4504
CONSTR. CONTR. NO. N62470-00-C-4504
NAVFAC DRAWING NO. 4407700
SHEET OF
E-3

8805E003
DRAWFORM REVISION 25

D:\99099.03\Elec\8805E003.DWG Last Update: 2/13/2001 Plotted: 7/10/2001 11:52 am By: Goodeau Plot Scale: 1=10.0 Xref Dwg:

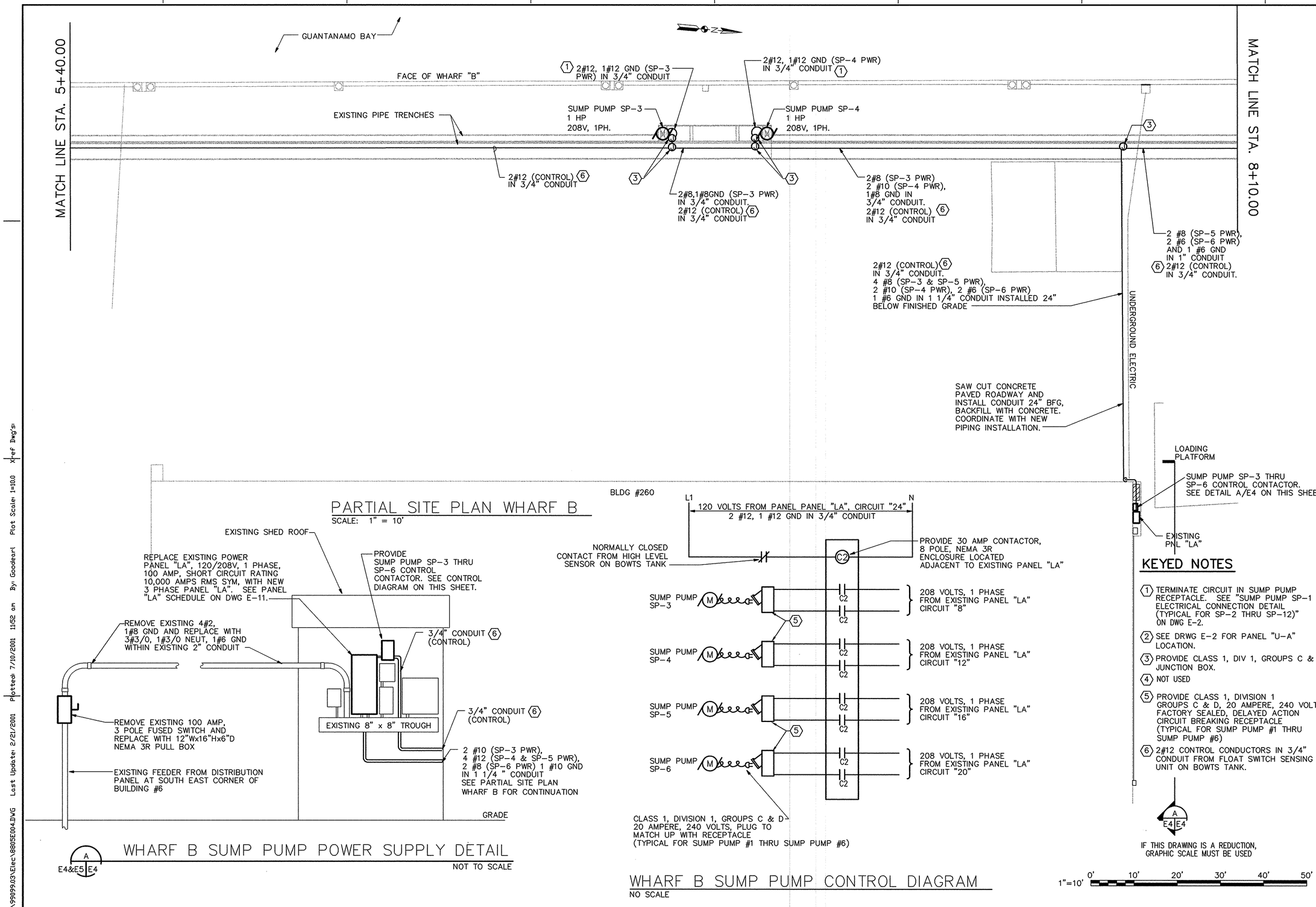
MATCH LINE STA. 5+40.00
MATCH LINE STA. 8+10.00
GUANTANAMO BAY
FACE OF WHARF "B"
EXISTING PIPE TRENCHES
1 2#12, 1#12 GND (SP-3 PWR) IN 3/4" CONDUIT
2#12, 1#12 GND (SP-4 PWR) IN 3/4" CONDUIT 1
SUMP PUMP SP-3
1 HP
208V, 1PH.
SUMP PUMP SP-4
1 HP
208V, 1PH.
2#12 (CONTROL) 6 IN 3/4" CONDUIT
3
2#8,1#8GND (SP-3 PWR) IN 3/4" CONDUIT.
2#12 (CONTROL) 6 IN 3/4" CONDUIT
2#8 (SP-3 PWR)
2 #10 (SP-4 PWR),
1#8 GND IN
3/4" CONDUIT.
2#12 (CONTROL) 6
IN 3/4" CONDUIT
2 #8 (SP-5 PWR),
2 #6 (SP-6 PWR)
AND 1 #6 GND
IN 1" CONDUIT
6 2#12 (CONTROL)
IN 3/4" CONDUIT.
2#12 (CONTROL) 6
IN 3/4" CONDUIT.
4 #8 (SP-3 & SP-5 PWR),
2 #10 (SP-4 PWR), 2 #6 (SP-6 PWR)
1 #6 GND IN 1 1/4" CONDUIT INSTALLED 24"
BELOW FINISHED GRADE
UNDERGROUND ELECTRIC
SAW CUT CONCRETE
PAVED ROADWAY AND
INSTALL CONDUIT 24" BFG,
BACKFILL WITH CONCRETE.
COORDINATE WITH NEW
PIPING INSTALLATION.
LOADING
PLATFORM
SUMP PUMP SP-3 THRU
SP-6 CONTROL CONTACTOR.
SEE DETAIL A/E4 ON THIS SHEET.
EXISTING
PNL "LA"
BLDG #260
PARTIAL SITE PLAN WHARF B
SCALE: 1" = 10'
EXISTING SHED ROOF
REPLACE EXISTING POWER
PANEL "LA", 120/208V, 1 PHASE,
100 AMP, SHORT CIRCUIT RATING
10,000 AMPS RMS SYM, WITH NEW
3 PHASE PANEL "LA". SEE PANEL
"LA" SCHEDULE ON DWG E-11.
PROVIDE
SUMP PUMP SP-3 THRU
SP-6 CONTROL
CONTACTOR. SEE CONTROL
DIAGRAM ON THIS SHEET.
REMOVE EXISTING 4#2,
1#8 GND AND REPLACE WITH
3#3/0, 1#3/0 NEUT, 1#6 GND
WITHIN EXISTING 2" CONDUIT
3/4" CONDUIT 6
(CONTROL)
EXISTING 8" x 8" TROUGH
3/4" CONDUIT 6
(CONTROL)
2 #10 (SP-3 PWR),
4 #12 (SP-4 & SP-5 PWR),
2 #8 (SP-6 PWR) 1 #10 GND
IN 1 1/4 " CONDUIT
SEE PARTIAL SITE PLAN
WHARF B FOR CONTINUATION
REMOVE EXISTING 100 AMP,
3 POLE FUSED SWITCH AND
REPLACE WITH 12"Wx16"Hx6"D
NEMA 3R PULL BOX
EXISTING FEEDER FROM DISTRIBUTION
PANEL AT SOUTH EAST CORNER OF
BUILDING #6
GRADE
A
E4&E5 E4
WHARF B SUMP PUMP POWER SUPPLY DETAIL
NOT TO SCALE
L1
N
120 VOLTS FROM PANEL PANEL "LA", CIRCUIT "24"
2 #12, 1 #12 GND IN 3/4" CONDUIT
NORMALLY CLOSED
CONTACT FROM HIGH LEVEL
SENSOR ON BOWTS TANK
C2
PROVIDE 30 AMP CONTACTOR,
8 POLE, NEMA 3R
ENCLOSURE LOCATED
ADJACENT TO EXISTING PANEL "LA"
SUMP PUMP
SP-3
SUMP PUMP
SP-4
SUMP PUMP
SP-5
SUMP PUMP
SP-6
5
208 VOLTS, 1 PHASE
FROM EXISTING PANEL "LA"
CIRCUIT "8"
208 VOLTS, 1 PHASE
FROM EXISTING PANEL "LA"
CIRCUIT "12"
208 VOLTS, 1 PHASE
FROM EXISTING PANEL "LA"
CIRCUIT "16"
208 VOLTS, 1 PHASE
FROM EXISTING PANEL "LA"
CIRCUIT "20"
CLASS 1, DIVISION 1, GROUPS C & D
20 AMPERE, 240 VOLTS, PLUG TO
MATCH UP WITH RECEPTACLE
(TYPICAL FOR SUMP PUMP #1 THRU SUMP PUMP #6)
WHARF B SUMP PUMP CONTROL DIAGRAM
NO SCALE
KEYED NOTES
1 TERMINATE CIRCUIT IN SUMP PUMP RECEPTACLE. SEE "SUMP PUMP SP-1 ELECTRICAL CONNECTION DETAIL (TYPICAL FOR SP-2 THRU SP-12)" ON DWG E-2.
2 SEE DRWG E-2 FOR PANEL "U-A" LOCATION.
3 PROVIDE CLASS 1, DIV 1, GROUPS C & D JUNCTION BOX.
4 NOT USED
5 PROVIDE CLASS 1, DIVISION 1 GROUPS C & D, 20 AMPERE, 240 VOLTS FACTORY SEALED, DELAYED ACTION CIRCUIT BREAKING RECEPTACLE (TYPICAL FOR SUMP PUMP #1 THRU SUMP PUMP #6)
6 2#12 CONTROL CONDUCTORS IN 3/4" CONDUIT FROM FLOAT SWITCH SENSING UNIT ON BOWTS TANK.
A
E4 E4
IF THIS DRAWING IS A REDUCTION, GRAPHIC SCALE MUST BE USED
1"=10'
0' 10' 20' 30' 40' 50'
REVISIONS
DESCRIPTION
DATE
APPROVED
A/E
DESIGN
DRAWN
REVIEW
CHIEF, ARCH/ ENGR.
PROJECT MANAGER
FIRE PROTECTION
BRANCH MANAGER
DESIGN DIRECTOR
GEE & JENSON
Engineers • Architects • Planners, Inc.
A/E CONTRACT NO.
APPROVED
DATE
ACTIVITY - SATISFACTORY TO
APPROVED
FOR EFD FOR COMMANDER NAVFAC
DEPARTMENT OF THE NAVY
NAVAL STATION
U.S. NAVAL STATION
GUANTANAMO BAY, CUBA
NAVAL FACILITIES ENGINEERING COMMAND
ATLANTIC DIVISION
NORFOLK, VIRGINIA
SUMP PUMPS
PIER A AND WHARVES B, T, AND U
STA.5+40.00 TO STA.8+10.00
CODE ID. NO. 80091
SIZE D
SCALE:
EFD NO.
STA. PROJ. NO.
SPEC. NO. 05-00-4504
CONSTR. CONTR. NO.
N62470-00-C-4504
NAVFAC DRAWING NO.
4407701
SHEET OF
E-4
8805E004
DRAWFORM REVISION 25 SEPT 96
REV/DATE
D:\990899.03\Elec\8805E004.DWG Last Update: 2/21/2001 Plotted: 7/10/2001 11:52 am By: Goodearl Plot Scale: 1=10.0 Xref: Dwg's:

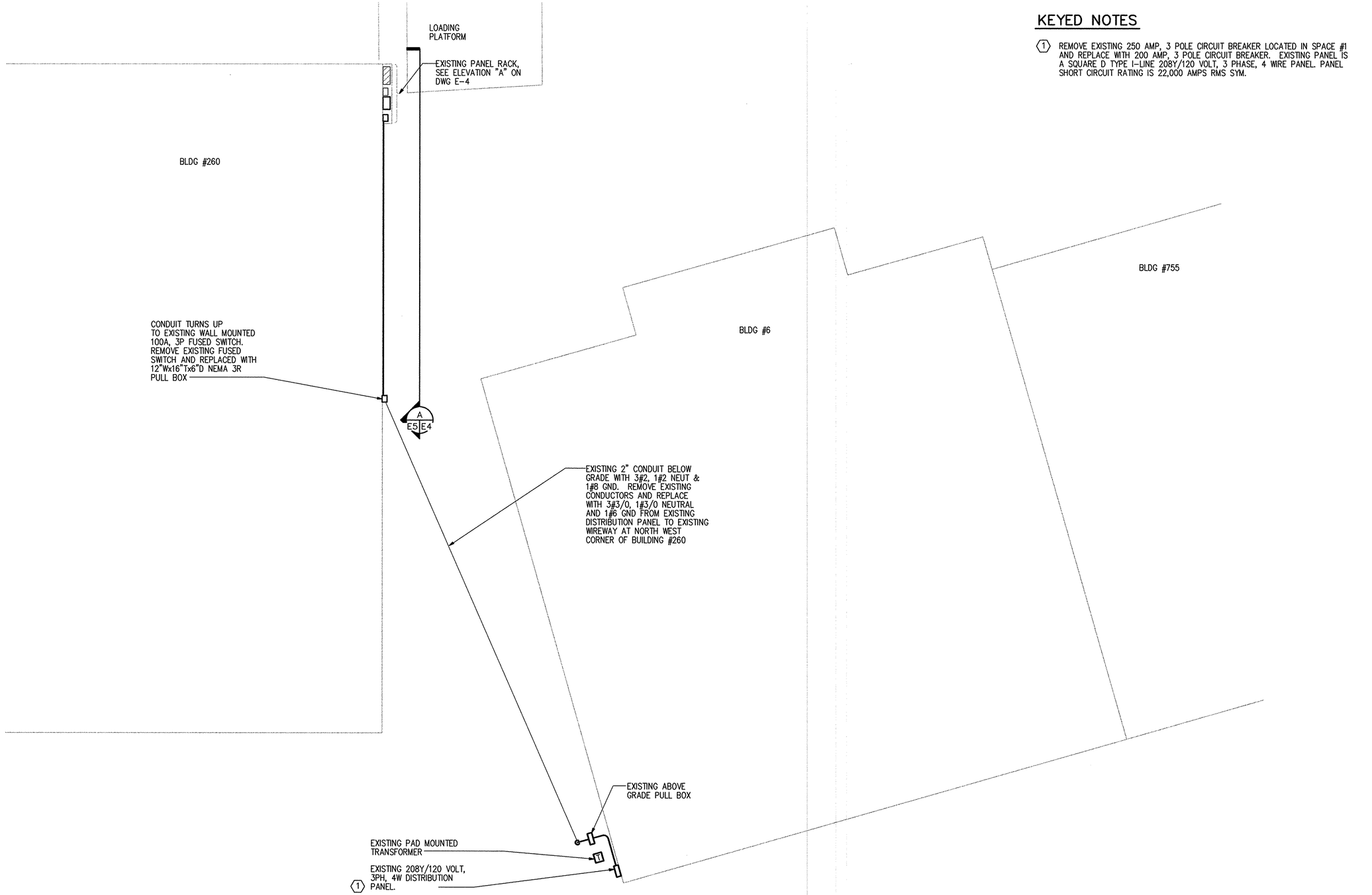

KEYED NOTES

1. REMOVE EXISTING 250 AMP, 3 POLE CIRCUIT BREAKER LOCATED IN SPACE #1 AND REPLACE WITH 200 AMP, 3 POLE CIRCUIT BREAKER. EXISTING PANEL IS A SQUARE D TYPE I-LINE 208Y/120 VOLT, 3 PHASE, 4 WIRE PANEL. PANEL SHORT CIRCUIT RATING IS 22,000 AMPS RMS SYM.

PARTIAL SITE PLAN BUILDINGS #260, #6 AND #755

SCALE: 1" = 10'

IF THIS DRAWING IS A REDUCTION, GRAPHIC SCALE MUST BE USED

SYM.	DESCRIPTION	DATE	APPROVED
	REVISIONS		

A/E DESIGN J.L.R. DRAWN L.L.S. REVIEW L.M.S. PROJ. MGR/ CHKR ___ CHIEF ___ PROJECT MANAGER ___ FIRE PROTECTION ___ BRANCH MANAGER ___ DESIGN DIRECTOR ___

GEE & JENSON
Engineers • Architects • Planners, Inc.
456 MONROE STREET • DETROIT • MICHIGAN • 48226
PHONE • 313 963-8000 • FAX • 313 963-0808

A/E CONTRACT NO. 69-C-5091

APPROVED ___ DATE ___

ACTIVITY - SATISFACTORY TO

APPROVED ___ DATE 3/6/03

FOR EFD, FOR COMMANDER NAVFAC

SEAL: STATE OF VIRGINIA, REGISTERED PROFESSIONAL ENGINEER, LEWIS M. SCHALL, 14637

DEPARTMENT OF THE NAVY
NAVAL STATION
NAVAL FACILITIES ENGINEERING COMMAND
ATLANTIC DIVISION
NORFOLK, VIRGINIA

U.S. NAVAL STATION GUANTANAMO BAY, CUBA

SUMP PUMPS
PIER A AND WHARVES B, T, AND U

PARTIAL SITE PLAN BLDG #260,#6,&#755-ELEC

CODE ID. NO. 80091 | SIZE D

SCALE:

EFD NO.

STA. PROJ. NO.

SPEC. NO. 05-00-4504

CONSTR. CONTR. NO. N62470-00-C-4504

NAVFAC DRAWING NO. 4407702

SHEET ___ OF ___

E-5

8805E005

DRAWFORM REVISION 23 SEPT 96

REV DATE

D:\99099.03\Elec\8805E005.DWG Last Update: 2/13/2001 Plotted: 7/10/2001 11:52 am By: Goodeart Plot Scale: 1=10.0 Xref Dwg's:

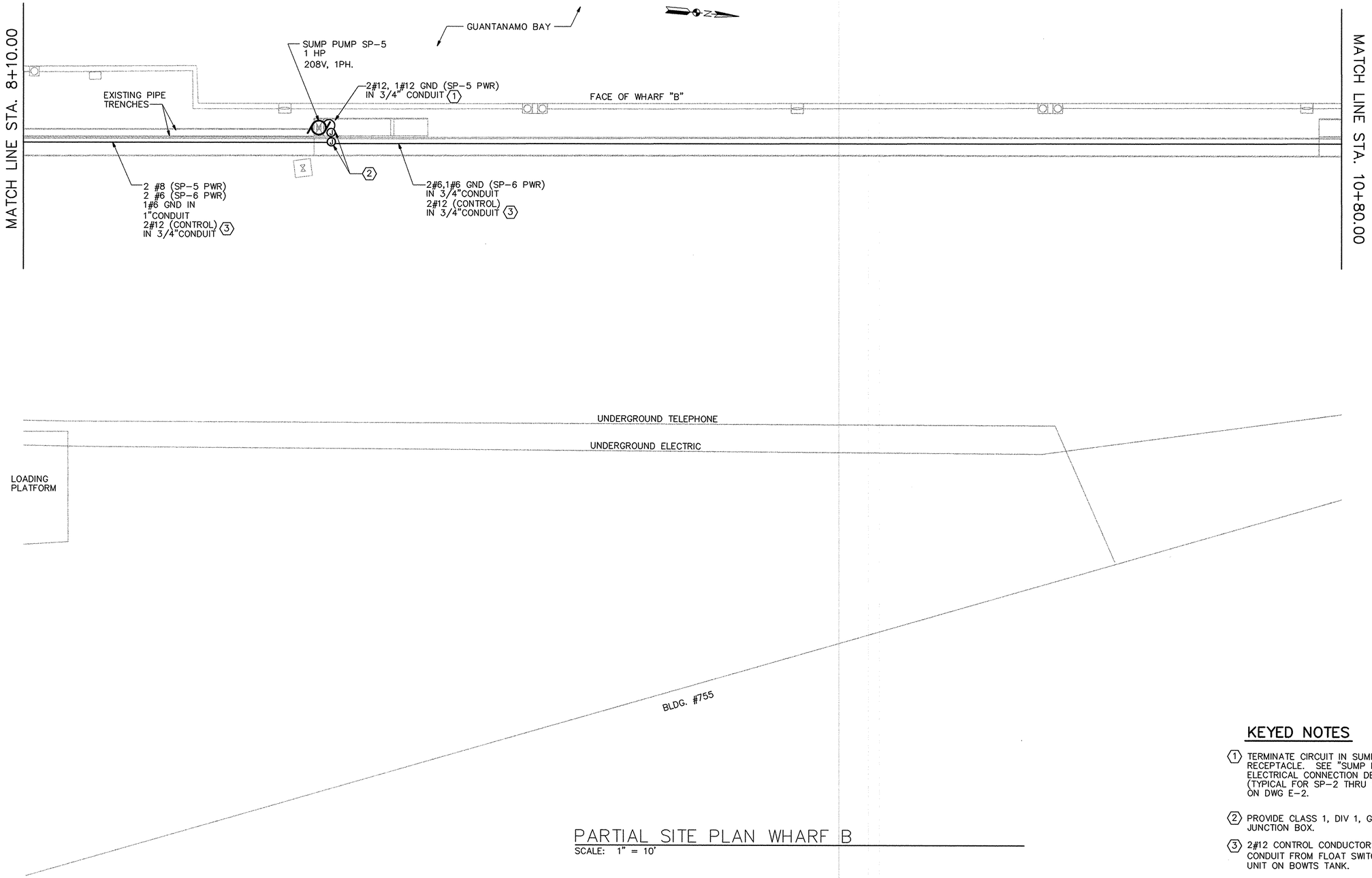

PARTIAL SITE PLAN WHARF B

SCALE: 1" = 10'

KEYED NOTES

1. TERMINATE CIRCUIT IN SUMP PUMP RECEPTACLE. SEE "SUMP PUMP SP-1 ELECTRICAL CONNECTION DETAIL (TYPICAL FOR SP-2 THRU SP-12)" ON DWG E-2.
2. PROVIDE CLASS 1, DIV 1, GROUPS C & D JUNCTION BOX.
3. 2#12 CONTROL CONDUCTORS IN 3/4" CONDUIT FROM FLOAT SWITCH SENSING UNIT ON BOWTS TANK.

IF THIS DRAWING IS A REDUCTION, GRAPHIC SCALE MUST BE USED

1"=10' 0' 10' 20' 30' 40' 50'

STA.	DESCRIPTION	DATE	APPROVED
	REVISIONS		

A/E
J.T.B. DESIGN
L.J.S. DRAWN
J.M.K. REVIEW
QC
CHIEF ARCH./ ENGR.
PROJECT MANAGER
FIRE PROTECTION
BRANCH MANAGER
DESIGN DIRECTOR

GEE & JENSON
ENGINEERS-ARCHITECTS-PLANNERS, P.A.
RAL ALVAREZ, CHTD. - WEST PALM BEACH
GEE & JENSON - OF FLORIDA - OF VIRGINIA

A/E CONTRACT NO. 83-C-5931

APPROVED
ACTIVITY - SATISFACTORY TO
APPROVED DATE 3/21/03
FOR ED TEM COMMANDER NAVFAC

NAVAL FACILITIES ENGINEERING COMMAND
ATLANTIC DIVISION
NORFOLK, VIRGINIA
DEPARTMENT OF THE NAVY
NAVAL STATION
U.S. NAVAL STATION GUANTANAMO BAY, CUBA
SUMP PUMPS
PIER A AND WHARVES B, T, AND U
STA.8+10.00 TO STA.10+80.00

CODE ID. NO. 80091 SIZE D
SCALE:
EFD NO.
STA. PROJ. NO.
SPEC. NO. 05-00-4504
CONSTR. CONTR. NO. N62470-00-C-4504
NAVFAC DRAWING NO. 4407703
SHEET OF
E-6

8805E006
DRAWFORM REVISION 25

D:\990099.03\Elec\8805E006.DWG Last Update: 2/21/2001 Plotted: 7/10/2001 11:52 am By: Goodeart Plot Scale: 1=10.0 X-ref Dwg's:

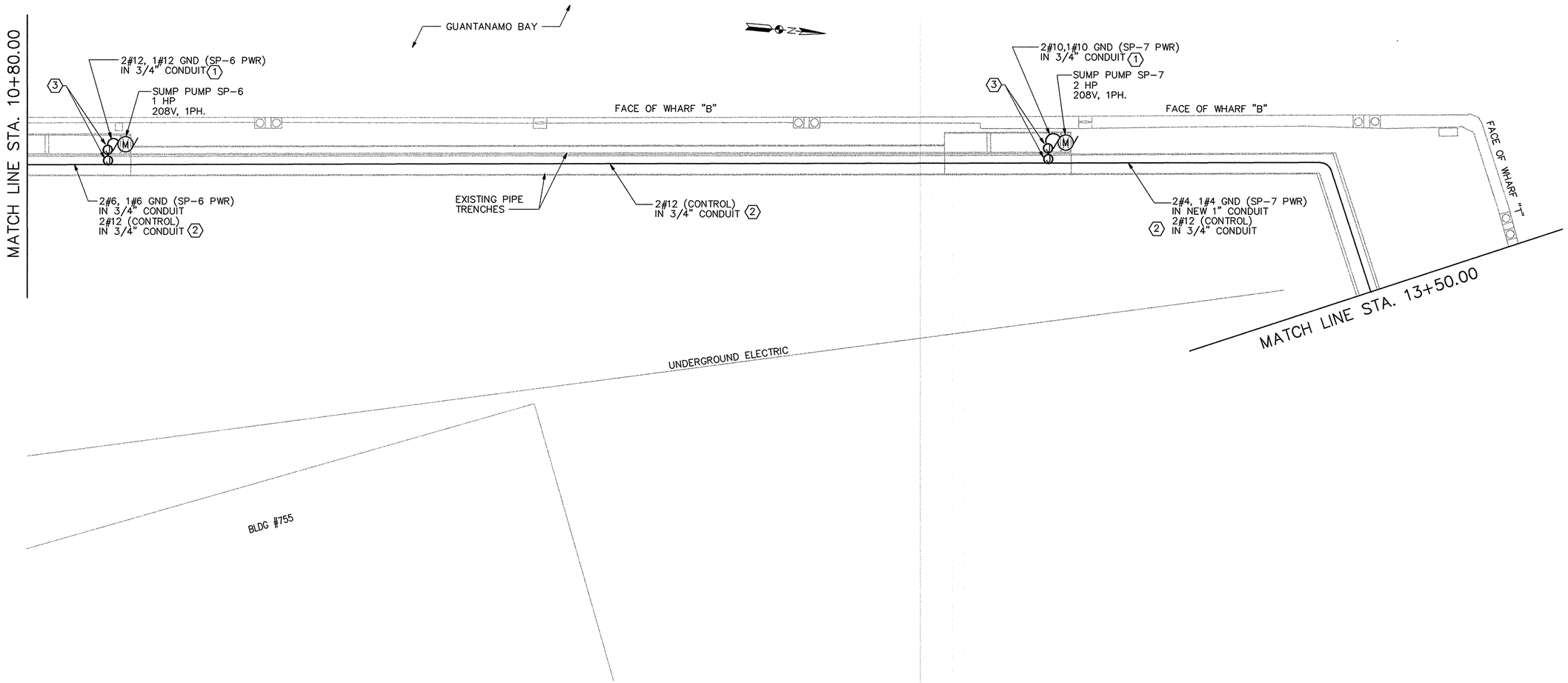

PARTIAL SITE PLAN WHARF B

SCALE: 1" = 10'

KEYED NOTES

(1) TERMINATE CIRCUIT IN SUMP PUMP RECEPTACLE. SEE "SUMP PUMP SP-1 ELECTRICAL CONNECTION DETAIL (TYPICAL FOR SP-2 THRU SP-12)" ON DWG E-2.

(2) 2#12 CONTROL CONDUCTORS IN 3/4" CONDUIT FROM FLOAT SWITCH SENSING UNIT ON BOWTS TANK.

(3) PROVIDE CLASS 1, DIV 1, GROUPS C & D JUNCTION BOX.

IF THIS DRAWING IS A REDUCTION, GRAPHIC SCALE MUST BE USED

1"=10' 0' 10' 20' 30' 40' 50'

REVISIONS

DESCRIPTION	DATE	APPROVED

A/E DESIGN L.L.S. DRAWN L.L.S. REVIEW

PROJECT MANAGER
FIRE PROTECTION
BRANCH MANAGER
DESIGN DIRECTOR

GEE & JENSON
Engineers • Architects • Planners, Inc.
PE, AIA, NAVD, GRUB, ASCE, NSPE, PMI & IEEE
Norfolk, Virginia • Tampa, Florida • Honolulu

A/E CONTRACT NO. 62-C-5021

APPROVED DATE

ACTIVITY - SATISFACTORY TO
APPROVED DATE 3/21/03
FOR ETR FOR COMMANDER NAVFAC

DEPARTMENT OF THE NAVY
NAVAL STATION
NAVAL FACILITIES ENGINEERING COMMAND
ATLANTIC DIVISION
NORFOLK, VIRGINIA

U.S. NAVAL STATION GUANTANAMO BAY, CUBA

SUMP PUMPS
PIER A AND WHARVES B, T, AND U
STA.10+80.00 TO STA.13+50.00

CODE ID. NO. 80091	SIZE D
SCALE:	
EFD NO.	
STA. PROJ. NO.	
SPEC. NO. 05-00-4504	
CONSTR. CONTR. NO. N62470-00-C-4504	
NAVFAC DRAWING NO. 4407704	
SHEET E-7	OF

8805E007

DRAWFORM REVISION 25 SEPT 96

D:\99099.03\Elec\8805E007.DWG Last Update: 2/21/2001 Plotted 7/10/2001 11:52 am By: Goodeurl Plot Scale: 1=10.0 Xref Dwg's:

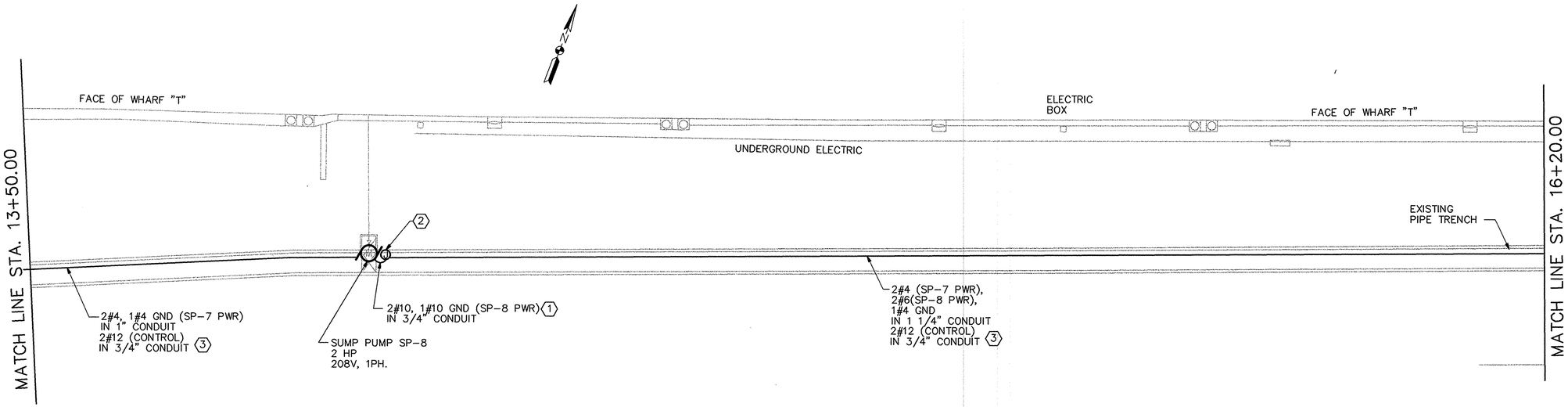

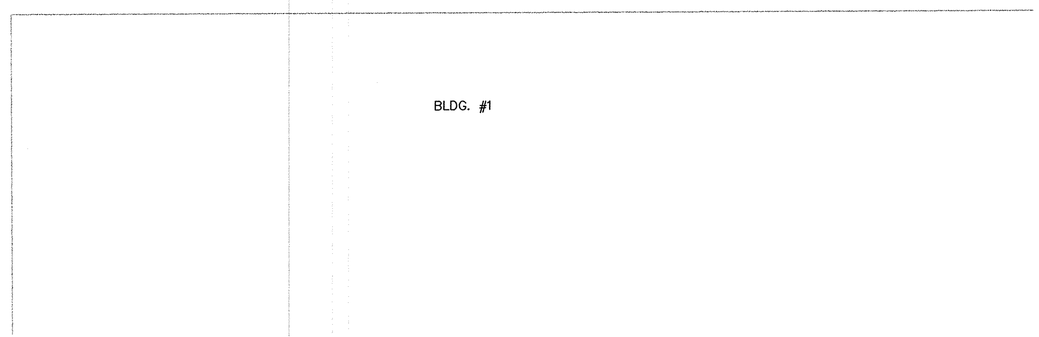

PARTIAL SITE PLAN WHARF T

SCALE: 1" = 10'

KEYED NOTES

1. TERMINATE CIRCUIT IN SUMP PUMP RECEPTACLE. SEE "SUMP PUMP SP-1 ELECTRICAL CONNECTION DETAIL (TYPICAL FOR SP-2 THRU SP-12)" ON DWG E-2.
2. PROVIDE CLASS 1, DIV 1, GROUPS C & D JUNCTION BOX.
3. 2#12 CONTROL CONDUCTORS IN 3/4" CONDUIT FROM FLOAT SWITCH SENSING UNIT ON BOWTS TANK.

IF THIS DRAWING IS A REDUCTION, GRAPHIC SCALE MUST BE USED

1"=10' 0' 10' 20' 30' 40' 50'

STM.	DESCRIPTION	DATE	APPROVED

REVISIONS

A/E: J.L.B. DESIGN; L.J.S. DRAWN; L.M.K. REVIEW; QC; CHIEF ARCH/ ENGR.; PROJECT MANAGER; FIRE PROTECTION; BRANCH MANAGER; DESIGN DIRECTOR

GEE & JENSON
ENGINEERS-ARCHITECTS-PLANNERS, Inc.
INE Annapolis Junction, 1000 Park Avenue, Annapolis Junction, MD 20701
Phone: 410-880-1000 Fax: 410-880-1001

A/E CONTRACT NO. 62-D-5931

APPROVED DATE

ACTIVITY - SATISFACTORY TO

APPROVED DATE 3 Jul 03

FOR STATE OF COMMAND OFFICE

SEAL

DEPARTMENT OF THE NAVY
NAVAL STATION
ATLANTIC DIVISION
NAVAL FACILITIES ENGINEERING COMMAND
NORFOLK, VIRGINIA

U.S. NAVAL STATION GUANTANAMO BAY, CUBA

SUMP PUMPS
PIER A AND WHARVES B, T, AND U
STA.13+50.00 TO STA.16+20.00

CODE ID. NO. 80091	SIZE D
SCALE:	
EFD NO.	
STA. PROJ. NO.	
SPEC. NO. 05-00-4504	
CONSTR. CONTR. NO. N62470-00-C-4504	
NAVFAC DRAWING NO. 4407705	
SHEET	OF

E-8

8805E008

DRAWFORM REVISION 25 SEPT 96

REVDATE

Plotted: 7/10/2001 11:52 am By: Goodeart Plot Scale: 1=10.0 Xref Dwg's:

D:\99099.03\Elec\8805E008.DWG Last Update: 2/21/2001

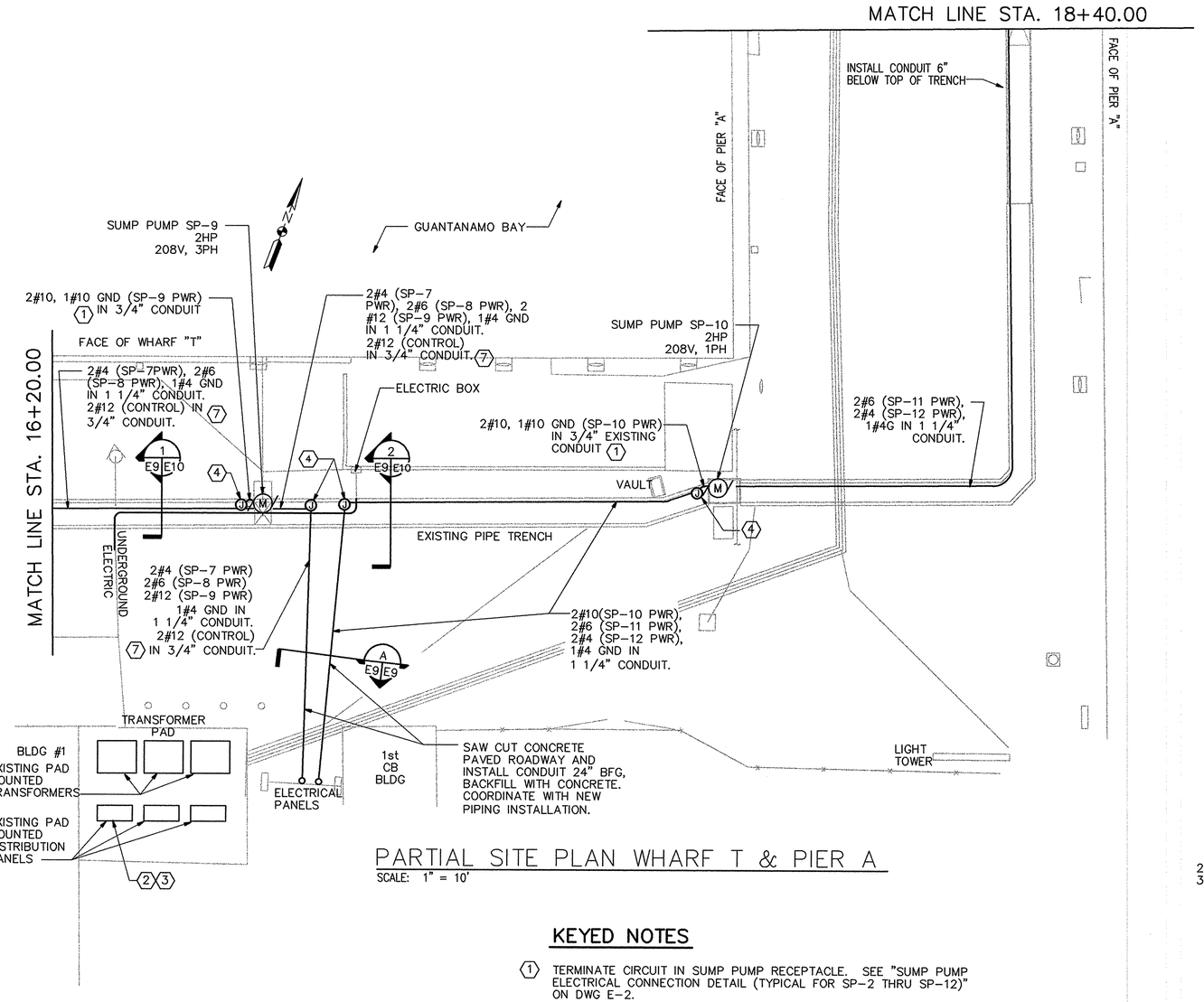

PARTIAL SITE PLAN WHARF T & PIER A

SCALE: 1" = 10'

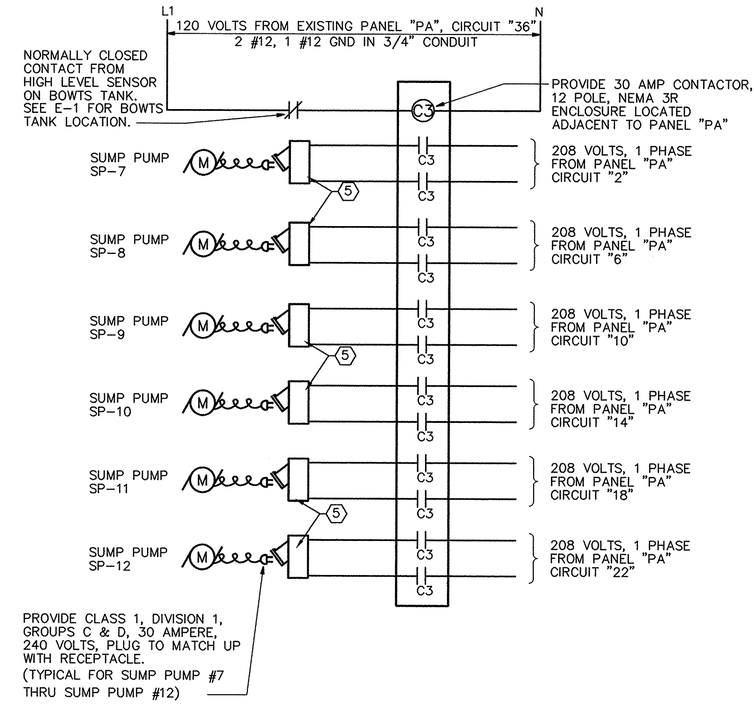

WHARF T AND PIER A SUMP PUMP CONTROL DIAGRAM

NO SCALE

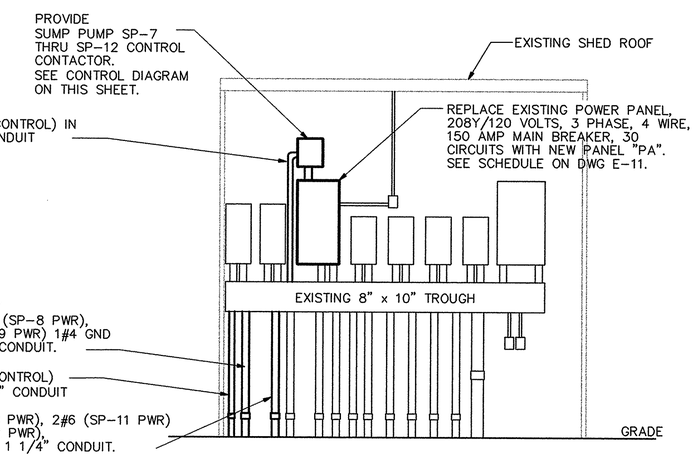

PIER A & WHARF T SUMP PUMP POWER SUPPLY DETAIL

NOT TO SCALE

KEYED NOTES

(1) TERMINATE CIRCUIT IN SUMP PUMP RECEPTACLE. SEE "SUMP PUMP ELECTRICAL CONNECTION DETAIL (TYPICAL FOR SP-2 THRU SP-12)" ON DWG E-2.

(2) REMOVE EXISTING 150 AMP, 3 POLE CIRCUIT BREAKER #2 WHICH FEEDS ADJACENT DISCONNECT RACK AND REPLACE WITH 200 AMP, 3 POLE CIRCUIT BREAKER. EXISTING PANEL IS SQUARE D, I-LINE TYPE HCW, SHORT CIRCUIT RATING 22,000 AMPS RMS SYM, SQUARE D #122980255AZO, 208Y/120 VOLT, 3 PHASE, 4 WIRE NEMA 3R PAD MOUNTED.

(3) REMOVE EXISTING 3#1/0, 1#1/0 NEUTRAL AND 1#6 GROUND WITHIN 2" CONDUIT FROM 208Y/120 VOLT DISTRIBUTION PANEL TO ADJACENT DISCONNECT RACK AND PROVIDE 3#3/0, 1#3/0 NEUTRAL AND 1#6 GROUND WITHIN EXISTING 2" CONDUIT. RECONNECT IN WIREWAY SAME AS EXISTING. PROVIDE 3#3/0, 1#3/0 NEUTRAL, 1#6 GROUND FROM WIREWAY TAP TO MAIN BREAKER IN NEW PANEL "PA".

(4) PROVIDE CLASS 1, DIV 1, GROUPS C & D JUNCTION BOX.

(5) PROVIDE CLASS 1, DIVISION 1, GROUPS C & D, 25 AMPERE, 240 VOLTS, FACTORY SEALED, DELAYED ACTION CIRCUIT BREAKING RECEPTACLE (TYPICAL FOR SUMP PUMP #7 THRU SUMP PUMP #12)

(6) PROVIDED UNDER SEPARATE PROJECT.

(7) 2#12 CONTROL CONDUCTORS IN 3/4" CONDUIT FROM FLOAT SWITCH SENSING UNIT ON BOWTS TANK.

IF THIS DRAWING IS A REDUCTION, GRAPHIC SCALE MUST BE USED

1"=10' 0' 10' 20' 30' 40' 50'

REVISIONS

REV	DESCRIPTION	DATE	APPROVED

GEE & JENSON
Engineers • Architects • Planners, Inc.
Gee & Jenson Engineers-Architects-Planners, Inc.
FLORIDA LICENSE — EB 0000024 — AA 0000008

A/E CONTRACT NO. 38-C-5091
APPROVED DATE
ACTIVITY – SATISFACTORY TO DATE
APPROVED 3 Jul 03
FOR EFD FOR COMMANDER NAVFAC

A/E L.J.E. DESIGN
L.J.S. DRAWN
L.M.K. REVIEW
QC CHIEF ARCH/ ENGR.
PROJECT MANAGER
FIRE PROTECTION
BRANCH MANAGER
DESIGN DIRECTOR

EFD

DEPARTMENT OF THE NAVY
NAVAL FACILITIES ENGINEERING COMMAND
ATLANTIC DIVISION
NORFOLK, VIRGINIA
NAVAL STATION
U.S. NAVAL STATION
GUANTANAMO BAY, CUBA
SUMP PUMPS
PIER A AND WHARVES B, T, AND U
STA.16+20.00 TO STA.18+40.00

CODE ID. NO. 80091 | SIZE D
SCALE:
EFD NO.
STA. PROJ. NO.
SPEC. NO. 05-00-4504
CONSTR. CONTR. NO. N62470-00-C-4504
NAVFAC DRAWING NO. 4407706
SHEET OF
E-9

8805E009

REVDATE

D:\99099.03\Elec\8805E009.DWG Last Update: 2/21/2001 Plotted: 7/10/2001 11:52 am By: Goodeart Plot Scale: 1=10.0 Xref Dwgs:

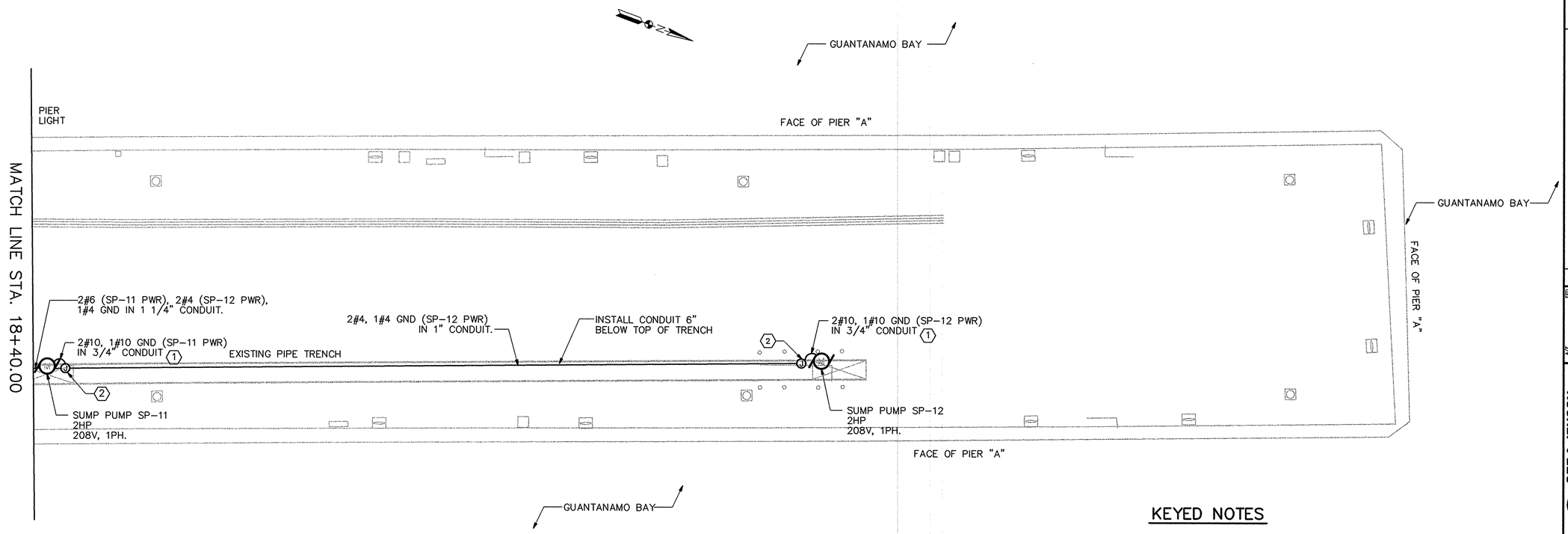

PARTIAL SITE PLAN PIER A

SCALE: 1" = 10'

KEYED NOTES

1. TERMINATE CIRCUIT IN SUMP PUMP RECEPTACLE. SEE "SUMP PUMP SP-1 ELECTRICAL CONNECTION DETAIL (TYPICAL FOR SP-2 THRU SP-12)" ON DWG E-2.
2. PROVIDE CLASS 1, DIV 1, GROUPS C & D JUNCTION BOX.
3. REMOVE EXISTING 3" GALVANIZED RIGID STEEL CONDUIT AS INDICATED AND PROVIDE NEW 3" CONDUIT AS INDICATED. THE EXISTING CONDUIT CONTAINS THE FOLLOWING CONDUCTORS:
   3 - #3/0 TYPE THW COPPER
   2 - #1 THW COPPER
   2 - #2 THW COPPER
   3 - #8 THHN COPPER
   1 - #6 THHN COPPER GROUND
   2 - #10 THW COPPER
   PROVIDE NEW CONDUCTORS FROM MANHOLE TO EXIST ELECTRICAL BOX ALONG WHARF T. SPLICE TO EXISTING CONDUCTORS IN THE MANHOLE AND ELECTRICAL BOX.

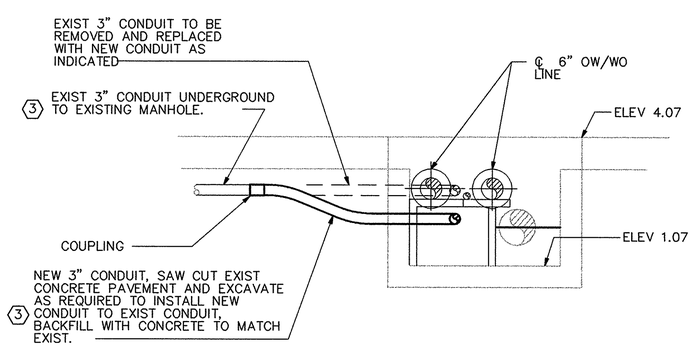

1 E9 E10 SECTION

NOT TO SCALE

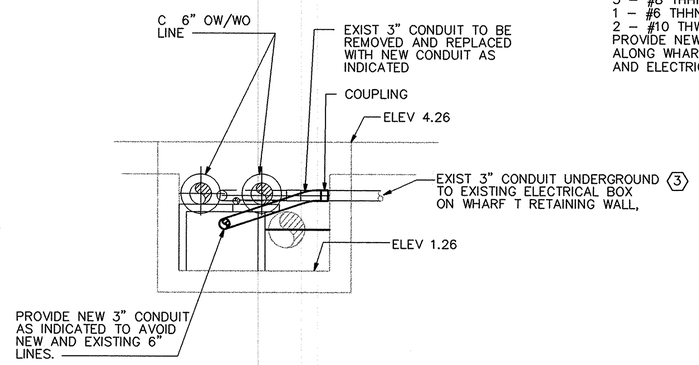

2 E9 E10 SECTION

NOT TO SCALE

IF THIS DRAWING IS A REDUCTION, GRAPHIC SCALE MUST BE USED

1"=10' 0' 10' 20' 30' 40' 50'

REVISIONS			
STM.	DESCRIPTION	DATE	APPROVED

A/E: L.L.B. DESIGN; L.L.S. DRAWN; L.M.K. REVIEW; QC; CHIEF ARCH./ ENGR.; PROJECT MANAGER; FIRE PROTECTION; BRANCH MANAGER; DESIGN DIRECTOR

GEE & JENSON Engineers • Architects • Planners, Inc. 2550 Fifth Avenue • San Diego, CA 92103 (619) 235-5200 • FAX 235-9290

A/E CONTRACT NO. 28-J1-2011

APPROVED DATE

ACTIVITY - SATISFACTORY TO

APPROVED DATE 3 July 03

FOR EFD FOR COMMANDER NAVFAC

REGISTERED PROFESSIONAL ENGINEER

DEPARTMENT OF THE NAVY — NAVAL FACILITIES ENGINEERING COMMAND

NAVAL STATION — ATLANTIC DIVISION — NORFOLK, VIRGINIA

U.S. NAVAL STATION — GUANTANAMO BAY, CUBA

SUMP PUMPS PIER A AND WHARVES B, T, AND U

PARTIAL SITE PLAN PIER A-ELEC SITE PLAN

CODE ID. NO. 80091	SIZE D
SCALE:	
EFD NO.	
STA. PROJ. NO.	
SPEC. NO. 05-00-4504	
CONSTR. CONTR. NO. N62470-00-C-4504	
NAVFAC DRAWING NO. 4407707	
SHEET	OF
E-10	

8805E010

D:\99999\03\Elec\8805E010.DWG Last Update: 2/21/2001 Plotted: 7/10/2001 11:52 am By: Goodearl Plot Scale: 1=10.0 Xref Dwg's:

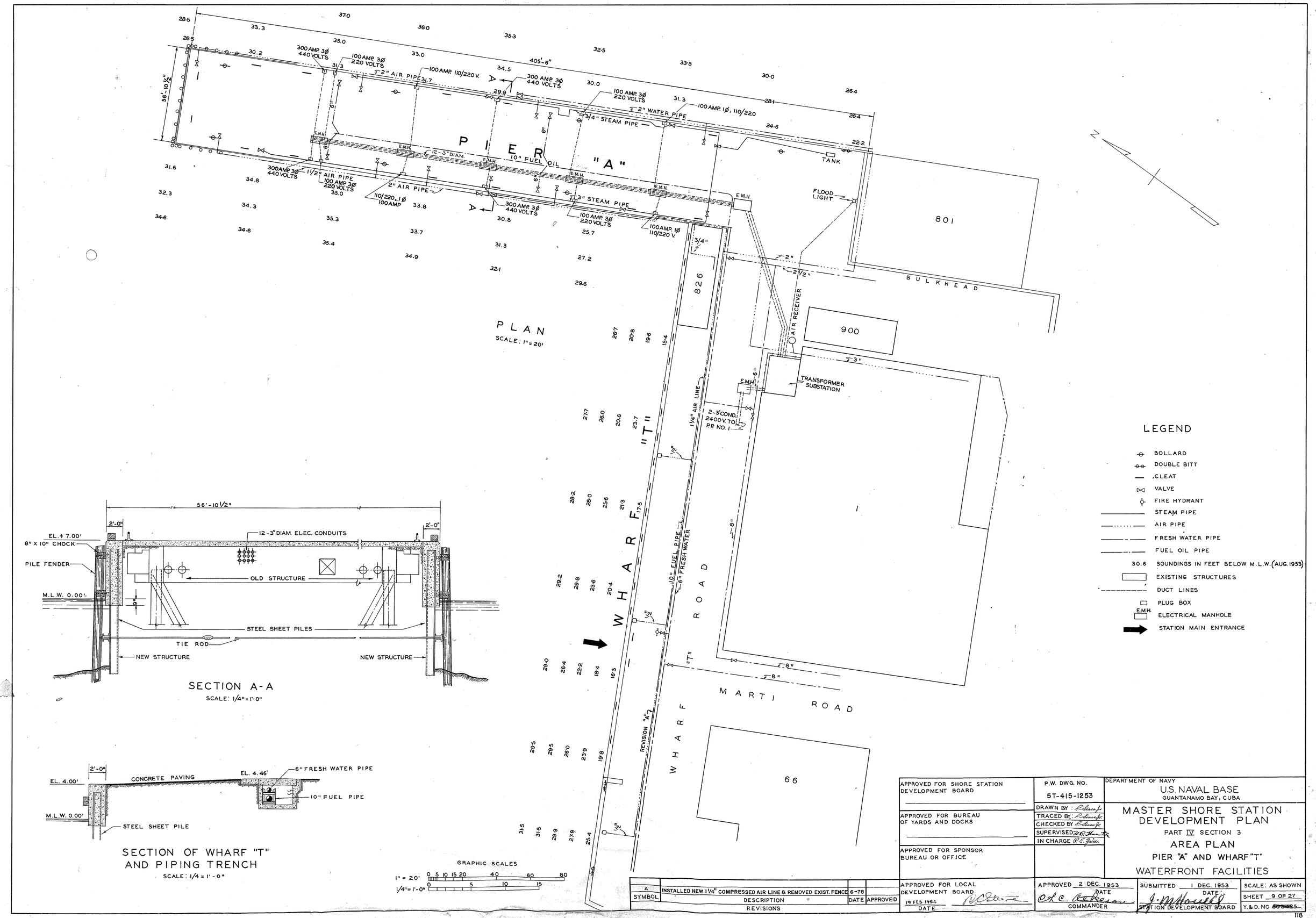
PIER "A"
PLAN
SCALE: 1" = 20'
WHARF "T"
WHARF ROAD
MARTI ROAD
BULKHEAD
801
900
826
66
TANK
FLOOD LIGHT
AIR RECEIVER
TRANSFORMER SUBSTATION
2-3" COND. 2400 V. TO P.P. NO. 1
1 1/4" AIR LINE
10" FUEL PIPE
6" FRESH WATER
REVISION "A"
12-3" DIAM.
10" FUEL OIL
3/4" STEAM PIPE
2" WATER PIPE
2" AIR PIPE
1 1/2" AIR PIPE
3" STEAM PIPE
100 AMP. 3Ø 220 VOLTS
300 AMP. 3Ø 440 VOLTS
100 AMP. 110/220 V.
100 AMP. 1Ø, 110/220
100 AMP. 1Ø 110/220 V.
110/220, 1Ø 100 AMP
405'-6"
56'-10 1/2"
LEGEND
BOLLARD
DOUBLE BITT
CLEAT
VALVE
FIRE HYDRANT
STEAM PIPE
AIR PIPE
FRESH WATER PIPE
FUEL OIL PIPE
30.6 SOUNDINGS IN FEET BELOW M.L.W. (AUG. 1953)
EXISTING STRUCTURES
DUCT LINES
PLUG BOX
E.M.H. ELECTRICAL MANHOLE
STATION MAIN ENTRANCE
SECTION A-A
SCALE: 1/4" = 1'-0"
EL. + 7.00'
8" X 10" CHOCK
PILE FENDER
M.L.W. 0.00'
12-3" DIAM. ELEC. CONDUITS
OLD STRUCTURE
STEEL SHEET PILES
TIE ROD
NEW STRUCTURE
SECTION OF WHARF "T" AND PIPING TRENCH
SCALE: 1/4 = 1'-0"
EL. 4.00'
CONCRETE PAVING
EL. 4.46'
6" FRESH WATER PIPE
10" FUEL PIPE
STEEL SHEET PILE
GRAPHIC SCALES
1" = 20'
1/4" = 1'-0"
APPROVED FOR SHORE STATION DEVELOPMENT BOARD
APPROVED FOR BUREAU OF YARDS AND DOCKS
APPROVED FOR SPONSOR BUREAU OR OFFICE
APPROVED FOR LOCAL DEVELOPMENT BOARD
19 FEB 1954
DATE
P.W. DWG. NO. 5T-415-1253
DRAWN BY
TRACED BY
CHECKED BY
SUPERVISED
IN CHARGE
DEPARTMENT OF NAVY
U.S. NAVAL BASE
GUANTANAMO BAY, CUBA
MASTER SHORE STATION DEVELOPMENT PLAN
PART IV SECTION 3
AREA PLAN
PIER "A" AND WHARF "T"
WATERFRONT FACILITIES
APPROVED 2 DEC. 1953
DATE
COMMANDER
SUBMITTED 1 DEC. 1953
DATE
STATION DEVELOPMENT BOARD
SCALE: AS SHOWN
SHEET 9 OF 27
Y. & D. NO
A
INSTALLED NEW 1 1/4" COMPRESSED AIR LINE & REMOVED EXIST. FENCE
6-78
SYMBOL
DESCRIPTION
DATE
APPROVED
REVISIONS