GENERAL DYNAMICS
Electric Boat Division
84-00-2239 DEPT 13/73

RADIOGRAPHY STANDARD SHOOTING SKETCH No. 65-00-00-8-2117 SHT 1

REV A

SKETCH MADE BY D. GRACE /F.W.

SETUP MADE BY WIS. CENT.

PAGE 1 OF 3

ORIGINAL APPROVAL AND DATE 4-19-93

1. [signature] EB DESIGN
2. Carl Smith EB DESIGN
3. [signature] 11/11/92 EB QC
4. LOT NO. "C" 1-22-93 USN APP'L

VIEWS (INCLUDING MARKERS)	1-2 THRU 8-1					
SOURCE TYPE	IR 192					
SOURCE SIZE	.10"X.10"					
SOURCE CURIES OR KV	43 CI					
MA	—					
SOURCE TO FILM DISTANCE	20"					
MATERIAL THICKNESS RADIOGRAPHED	.300-.862					
PENETRAMETER SIZE (ON PIECE)	.25, .62 .75					
PENETRAMETER SIZE (ON BLOCKS)	—					
PENETRAMETER BLOCK SIZE	—					
PENETRAMETER MATERIAL GROUP	IV					
FILM SIZE AND QUANTITY	11 X 14 16					
FILM TYPE	50/50					
SCREEN pb BACK	.005					
SCREEN pb FRONT	.005					
BACKING LEAD THICKNESS	—					
QUALITY LEVEL OF INSPECTION	2-2T/2-4T					

INSPECTION STANDARD
PPD 802-6335694
TABLE XXXV
LEVEL I

PART NAME: SPHERICAL BRG

MATERIAL: COCRW

GENERAL NOTES

1. ALL RADIOGRAPHY SHALL BE PERFORMED IN ACCORDANCE WITH THE APPLICABLE REVISION OF MIL-STD-271 AND THE APPLICABLE SHIPS SPECIFICATIONS AS NOTED IN THE PROCUREMENT/MANUFACTURING DOCUMENT.
2. ACCEPTANCE CRITERIA BASED ON FINISHED DIMENSIONS.

DWG	PIECE OR ITEM	PATTERN
DX0000700 (6641426)	SLM 10 SLM 11	221577

PART NO.
SLM 10 = 218023567
SLM 11 = 218023568

JUN 14 1993

This document is subject to special export controls and each transmittal to foreign governments or foreign nationals may be made only with the prior approval of Commander, Naval Ship Systems Command.

Attachment 5

GENERAL DYNAMICS
Electric Boat Division

ATTACHMENT 3

SHOOTING SKETCH No. 65-00-00-8-2117 SHT 1 REV. A

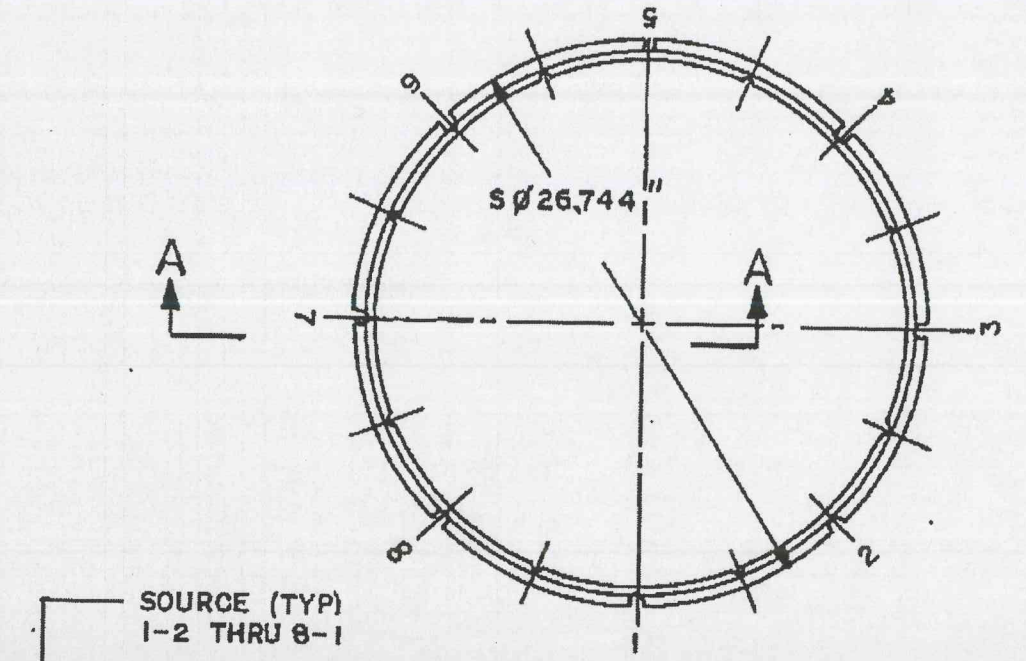

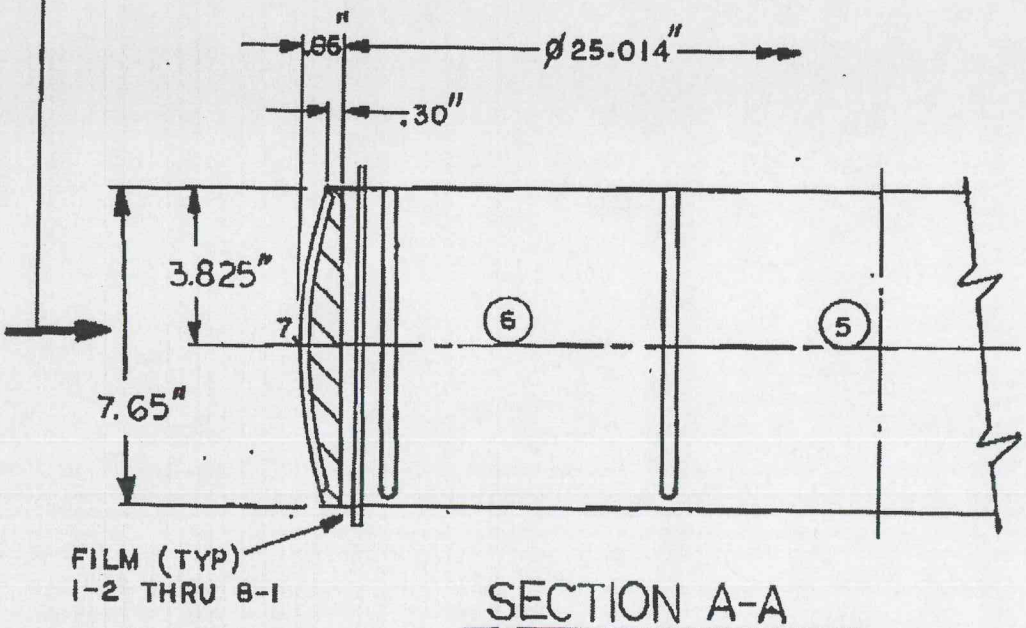

SECTION A-A

NOTE: SKETCH SHOWS FINISH DIMENSIONS

This document is subject to special export controls and each transmittal to foreign governments or foreign nationals may be made only with the prior approval of Commander, Naval Ship Systems Command.

84-00-4116

GENERAL DYNAMICS
Electric Boat Division

ATTACHMENT 3

SHOOTING SKETCH No. 65-00-00-8-2117 SHT 1 REV. A PAGE 3 OF 3

REV	REVISIONS	APP'D CONT	APP'D USN

RADIOGRAPHIC STANDARD SHOOTING SKETCH DISTRIBUTION LIST

										SHOP ORDER
										REVISION
										ADV. ISS.
										DATE
										NRO
										*
										SOSB
										PNSY 248
										MINS 245F
										NPN
										ING
										PEARL
										SFRAN
										CHASN
										NORVA
										PHILA
										BREM
										EBQ
										DEPT. 323
										DEPT. 324
										DEPT. 452
										DEPT. 453
										DEPT. 447
										DEPT. 462

TOTAL

This document is subject to special export controls and each transmittal to foreign governments or foreign nationals may be made only with the prior approval of Commander, Naval Ship Systems Command.

EB 4138-1

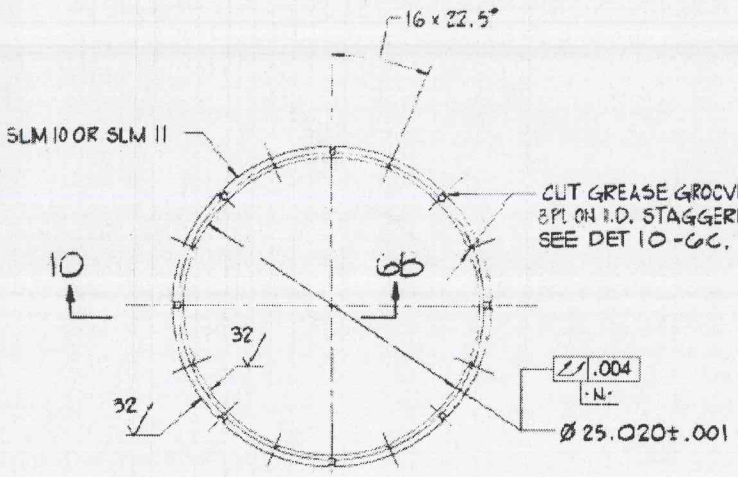

DETAIL 10-6A
SCALE: 1/3

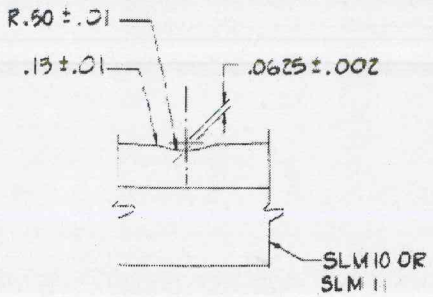

DETAIL 10-6C
SCALE: 1/4

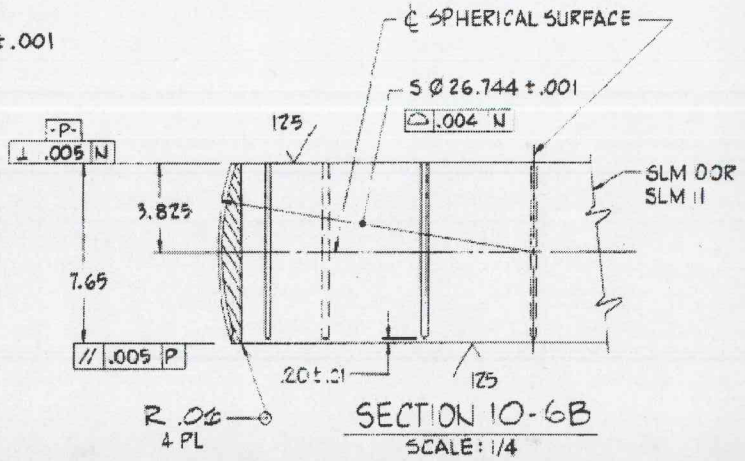

SECTION 10-6B
SCALE: 1/4

Local Drawing

Attachment 5