SPECIFICATION FOR
PROCESS WATER PUMP SKID

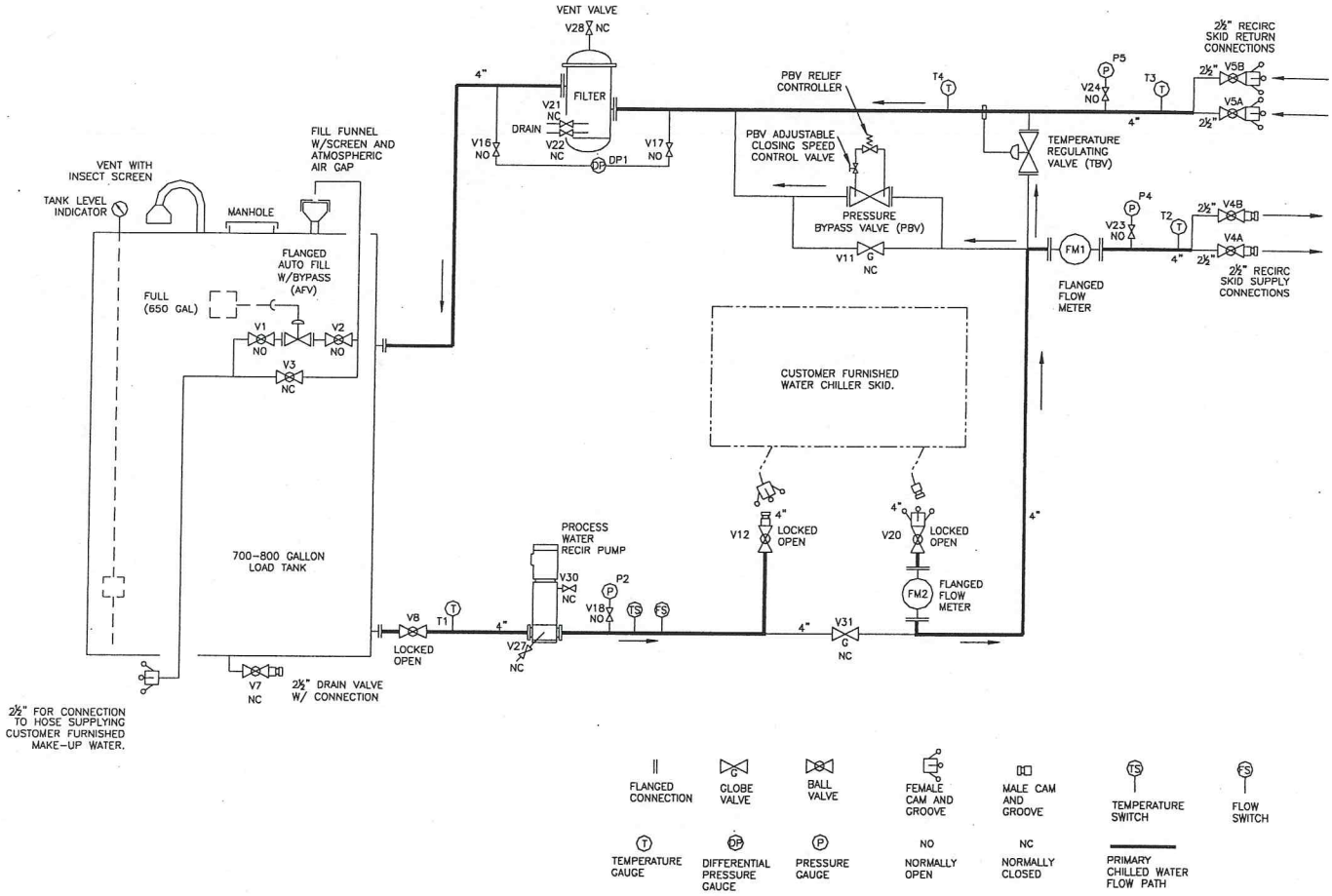

Figure 1 – Schematic

ATTACHMENT 10 CLIN 0001 DWG