Test Information:
Date of Test: _____ Contract Number _____ Job Location _____

Contents

Page Description

D-2 Rigging Sketch For Lifting Beam
D-3 Placement of Beam Into Building
D-4 Detailed Sequence of Lift

Description

GENERAL: The forms provided in this Appendix D are guidance; the submitted forms shall depict the actual method and equipment to be used.

Rigging Sketch for Lifting Beam: Page D-2

Details of rigging equipment, method of attachment to the equipment being lifted for installation, or removal, on site shall be identified for major components. Pertinent supplemental information for the lift of each item of equipment shall be provided and center of gravity location, torque of safety hoist rings or holddown fasteners and similar information.

Placement of Beam Into Building: Page D-3

This appendix provides details of the movement of equipment into or from buildings. This information should recognize all interferences that will impede placement of equipment prior to or in conjunction with landing equipment onto the deck level along with details about translation of equipment to clear obstacles.

Detailed Sequence of Lift: Page D-4

The details for lifting of the equipment into position or from an existing position to the deck should be provided. Details such as mobile crane or tri lifter positioning and/or boom positions should be provided in this form. Any translation while suspended should be provided.

Base Ingress or Egress Route: Page D-5

Transportation of large components may require specific roads or paths be identified for access to the facility. This form will provide the command/base/facility with information needed for preparatory actions allowing safe and timely delivery of equipment.

SAFETY REQUIREMENTS: INSTALLATION OR REMOVAL

RIGGING SKETCH FOR LIFTING BEAM

ITEM	QTY	DESCRIPTION
1	1	HOOK: Minimum capacity 35 tons. hook safety latch required.
2	2	Master Link: Size, Part #, manufacturer, Minimum capacity .
3	6	SHACKLE: type or style, size, minimum capacity, manufacturer.
4	4	SLING (PENDANT): Size (diameter), Construction, strength or minimum capacity, minimum length, manufacturer.
5	4	PADEYE: material, connection details, factor of safety, size, limitations on use, location.
6		GIRDER: Weight in the 'final to be lifted' configuration Location of Center of gravity

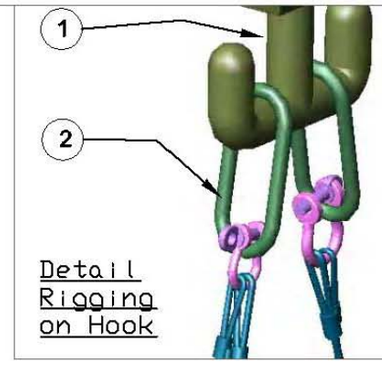

Detail Rigging on Hook

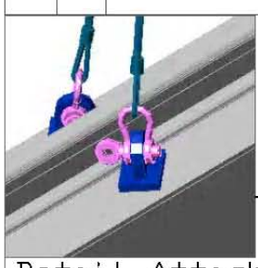

Detail Attachment to Beam

Padeyes are either bolted or welded to beam. Use of safety hoist rings, welded bars or shapes, through pipe for slings are allowed.

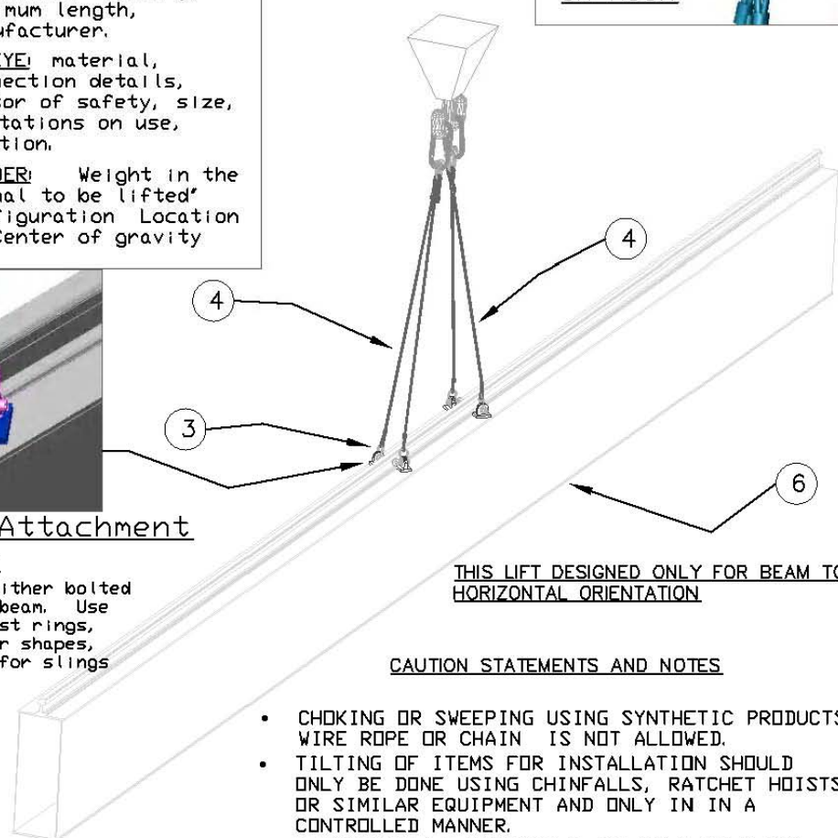

THIS LIFT DESIGNED ONLY FOR BEAM TO BE IN HORIZONTAL ORIENTATION

CAUTION STATEMENTS AND NOTES

- CHOKING OR SWEEPING USING SYNTHETIC PRODUCTS, WIRE ROPE OR CHAIN IS NOT ALLOWED.
- TILTING OF ITEMS FOR INSTALLATION SHOULD ONLY BE DONE USING CHINFALLS, RATCHET HOISTS OR SIMILAR EQUIPMENT AND ONLY IN IN A CONTROLLED MANNER.
- ATTACHMENT OF RIGGING TO MAJOR COMPONENTS IS ONLY VIA HARD ATTACHMENT POINTS. SEE 'DETAIL ATTACHMENT TO BEAM' FOR EXAMPLE.
- ONSITE CHANGES TO THIS SKETCH SHOULD BE PRESENTED TO THE ON SITE NAVY CRANE CENTER REPRESENTATIVE(OR DESIGNEE) FOR REVIEW PRIOR TO LIFT.

THIS ILLUSTRATION IS GUIDANCE FOR INSTALLATION OR REMOVAL OF ITEMS.

SAFETY REQUIREMENTS: INSTALLATION OR REMOVAL

PLACEMENT OF BEAM INTO BUILDING

ITEM	NOTE	DESCRIPTION
1		Girder on trailer. Extended length trailer requires large open area for manuvering outside of building.
2		Door allowing access into structure. Other doors do not allow suitable clearance for lifting girder from trailer and placing onto end trucks on runway rails.
3		Interferences in building documented by contractor on pre–installation site check. Interferences cause routing for lift and identify critical items needing to be moved or protective cover to be installed.
4		Door allowing mobile crane entrance into structure. Floor loads determined adequate. Swing envelopes for counter weights checked. Boom height and capacity needed at radius determined.

IDENTIFICATION OF INTERFERENCES

1 Two items of equipment (3) in the building cannot be moved and are of high value.

2 The trailer is an interference for lifting the beam through the door until the beam is lifted free of the trailer at initial lift. The trailer will then be removed from the building

3 After initial connection of rigging to the beam, while beam is on the trailer, all ladders and JLG/manlift devices will be removed. No access to the rigging or beam is possible since no room exists for ladders or JLG/manlifts to enter the facility. No equipment or personnel are allowed under a suspended load.

4 The mobil crane must have barriers/tape to prevent personnel between the crane, counter weight and wall, and other equipment in the building.

5 Access for tag line handlers and other personnel is limited due to certain equipment in the area. Facility personnel will need to escort and watch personnel when access to these areas is necessary.

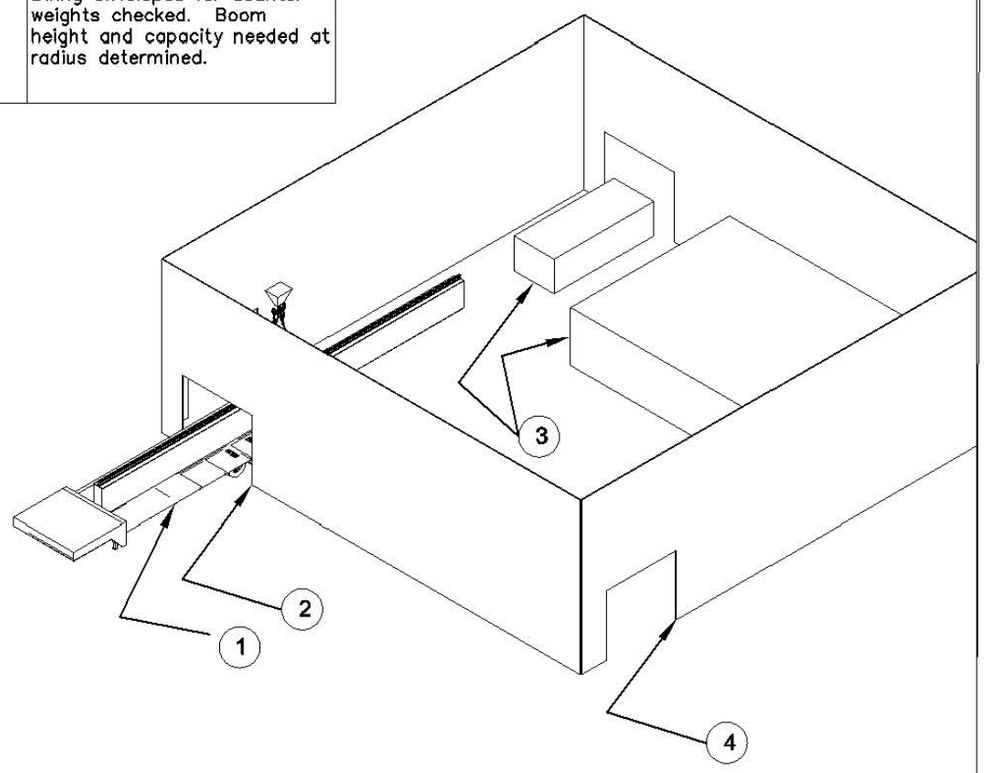

DETAILED SEQUENCE OF LIFT

SEQUENCE OF LIFT
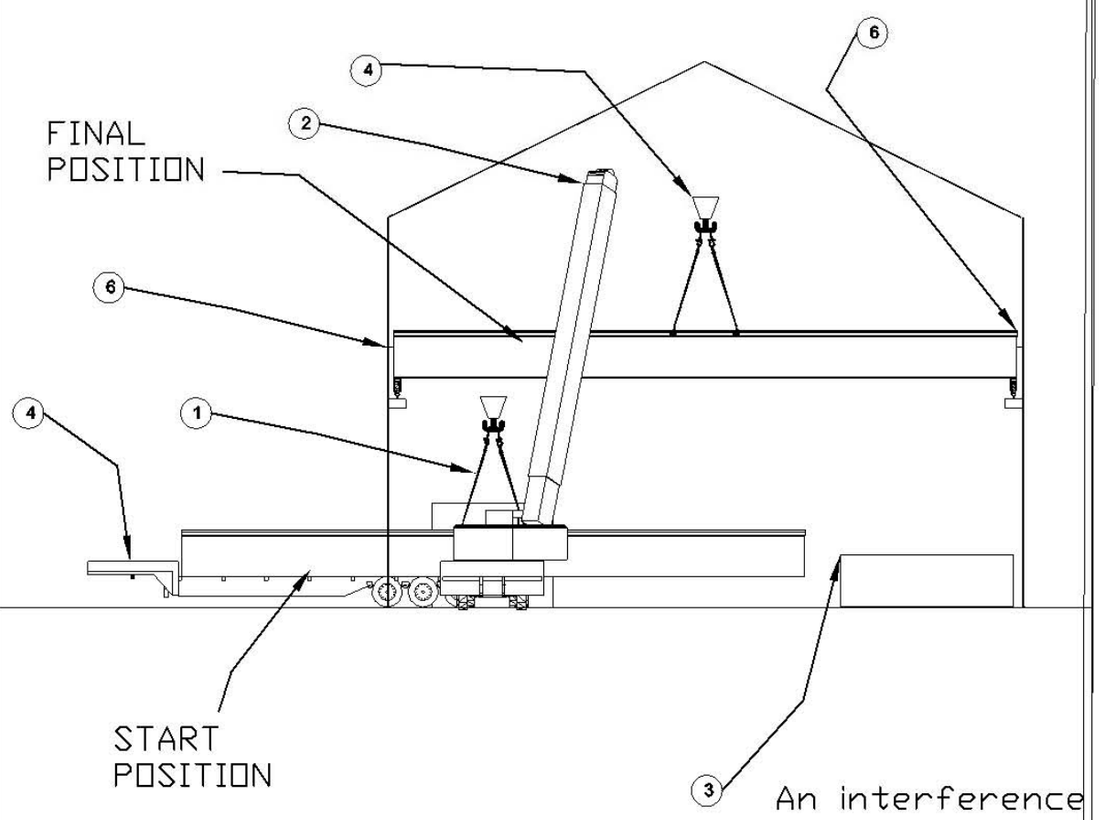
1. **Initial Lift Point:** Beam on trailer at location allowing rigging and crane boom to attach for first time and perform check of all items for proper balance and control.
2. **Crane Boom Interference Check:** A final check for boom clearence and any unforseen interferences must be done at this time. If any interferences are detected the beam/load should not be lifted until the condition is evaluated. Do not leave a load suspended for a long interval (20 minutes or greater).
3. **Begining of the Lift:** Initiate the lift: use the swing function of the crane to move the beam. All critical interferences are known and designated watchstanders monitor for problems as the load is lifted
4. **Trailer Removal:** The lift progresses to allow safe removal the trailer.
5. **Final Lift Point:** The load is raised while remaining in a horizontal orientation and located in the final position for installation onto the trucks. All taglines are manned and watchstanders are monitoring the load movement.
6. **Secure Beam/load:** The lift is completed with fasteners secured prior to disconnecting rigging and removing the crane boom. JLG/manlift devices may be moved into position at that time.