STRUCTURAL ENGINEERING INVESTIGATION REPORT
OF AN EXISTING BUILDING FOR THE SUPPORT
OF A PROPOSED 25 TON CRANE

TABLE A

LIST OF BUILDING REFERENCE DRAWINGS SPECIFICALLY APPLICABLE TO EVALUATION OF CRANE RUNWAY AND FOR THE CONSTRUCTION OF AN CRANE ACCESS STAIRWAY

A. GROUP 1 - TAKEN FROM A SET OF 201 DRAWINGS BY LOCKWOOD GREENE DATE 1973

	DWG. NO.	TITLE
1.	3A-4-3001-F	ROOF FRAMING PLAN (Includes GENERAL NOTES & ROOF LOADS)
2.	3A-4-3021-E	CRANE RUNWAY FRAMING
3.	3A-4-3022-D	CRANE RUNWAY FRAMING
4.	3A-4-3023-F	CRANE RUNWAY FRAMING
5.	3A-4-3035-F	COLUMN SCHEDULE & DETAILS, SHEET 1
6.	3A-4-3036-F	COLUMN SCHEDULE & DETAILS, SHEET 2
7.	3A-4-3050-D	ELEVATION OF CRANE RUNWAY (LINE H)
8.	3A-4-3051-D	ELEVATION OF CRANE RUNWAY (LIKE J)
9.	3A-4-3052-F	CRANE RUNWAY SECTIONS & DETAILS
10.	3A-4-3055-F	CRANE DESIGN LOADS & CLEARANCES
11.	3A-4-3056-G	FRAMING PLANS & DETAILS (SHEET 1)
12.	3A-4-3057-I	FRAMING PLANS & DETAILS (SHEET 2)
13.	3A-4-3058-H	FRAMING PLANS & DETAILS (SHEET 3)
14.	3A-4-3063-B	SECTIONS & DETAILS
15.	3A-4-3064-C	STAIR PLANS, SECTIONS & DETAILS
16.	3A-4-3065-B	STAIR PLANS, SECTIONS & DETAILS

B. GROUP 2 - TAKEN FROM A SET OF 46 DRAWINGS BY FLORIDA STEEL CORP. DATED 1981

1.	3A2	GENERAL LAYOUT NOTE: THIS DRAWING IDENTIFIES BRIDGE CRANES LOCATED IN EACH BUILDING BAY

STRUCTURAL ENGINEERING INVESTIGATION REPORT
OF AN EXISTING BUILDING FOR THE SUPPORT
OF A PROPOSED 25 TON CRANE

TABLE B

LIST OF NEW DRAWING BY HARTLEY & ASSOCIATES, INC. SHOWING A PROPOSED ACCESS STAIR TO THE NEW CRANE

	DWG. NO.	TITLE
1.	ST-1	ACCESS STAIR TO CRANE (SHOWS PLANS OF STAIR SYSTEM)
2.	ST-2	ACCESS STAIR TO CRANE (SHOWS SECTIONS THRU STAIR)
3.	ST-3	ACCESS STAIR TO CRANE (SHOWS TRANSVERSE SECTION THRU LANDINGS)

2234

LTR.	DATE	REVISIONS	BY	APPRD.

© Hartley & Assoc.

KONECRANES
ORANGE PARK, FL
FOR: USMC - BLOUNT ISLAND - JACKSONVILLE, FL
BUILDING EVALUATION
FOR 25 TON CRANE

HARTLEY & ASSOCIATES, INC.
CONSULTING ENGINEERS
JACKSONVILLE, FLORIDA

SHEET TITLE:
ACCESS STAIR
LIST OF
DRAWINGS

DATE: 3/21/11
JOB NO. 2011-03
SHEET NO.
DWG 1
OF
DRAWN BY: JAH
CHKD.BY: JAH
SCALE: 3/8"=1'-0"

DRAWING LIST

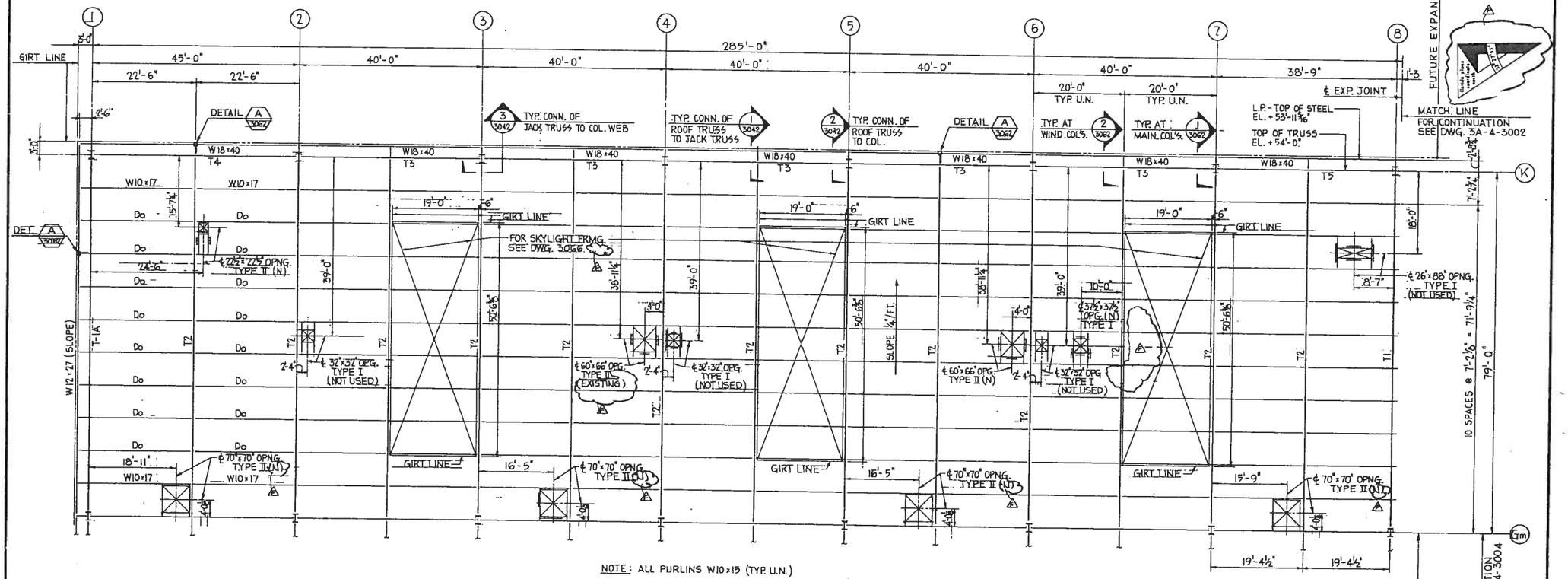

NOTE: ALL PURLINS W10x15 (TYP. U.N.)

PART ROOF FRAMING PLAN — AREA I

T1, T2,... ETC. INDICATES ROOF TRUSSES - SEE DWG. 3A-4-3039 FOR DETAILS.
FOR TYP. PURLIN TO TRUSS CHORD CONN. SEE DWG. 3A-4-3063.
TOP OF STEEL EL. AS SHOWN.
FOR TYPICAL FRAMING OF ROOF OPENINGS SEE DWG. 3A-4-3061.
ALL ROOF OPENINGS INDICATED AS NEW (N) ARE FRAMED BUT NOT CUT THROUGH.

NOTE: ALL CONSTRUCTION IS EXISTING UNLESS INDICATED AS NEW (N).

ABBREVIATIONS:

N.T.S. — NOT TO SCALE
H.R. — HAND RAIL
U.N. — UNLESS NOTED
H.P. — HIGH POINT
L.P. — LOW POINT
W.P. — WORKING POINT
N.S. — NEAR SIDE
F.S. — FAR SIDE
H.S. — HIGH STRENGTH
N.I.C. — NOT IN CONTRACT

STRUCTURAL STEEL GENERAL NOTES

1. ALL STRUCTURAL STEEL WORK SHALL CONFORM TO THE CURRENT ISSUE OF THE AISC "SPECIFICATIONS FOR THE DESIGN, FABRICATION, AND ERECTION OF STRUCTURAL STEEL FOR BUILDINGS", AND SHALL COMPLY WITH ALL LOCAL LAWS AND ORDINANCES. WHERE CONFLICTING REQUIREMENTS OCCUR, THE MORE STRINGENT SHALL APPLY.
2. ALL STRUCTURAL STEEL SHALL CONFORM TO ASTM DESIGNATION A36 (FY=36KSI) UNLESS NOTED.
3. ALL WELDING SHALL CONFORM TO THE CURRENT SPECIFICATIONS OF THE AMERICAN WELDING SOCIETY, AND SHALL COMPLY WITH ALL LOCAL LAWS AND ORDINANCES. WELDING ELECTRODES SHALL BE E-70 SERIES.
4. BOLTS SHALL BE 7/8" ϕ UNLESS NOTED
   a. HIGH STRENGTH BOLTS SHALL CONFORM TO ASTM DESIGNATION A325
   b. ALL OTHER BOLTS SHALL CONFORM TO ASTM DESIGNATION A307
5. CONNECTIONS:
   ALL BEAM CONNECTIONS SHALL BE STANDARD FRAMED OR SEATED, UNLESS NOTED. UNLESS GREATER REACTIONS ARE INDICATED ON THE PLANS, CONNECTIONS SHALL DEVELOP AT LEAST ONE-HALF OF THE TOTAL UNIFORM LOAD CAPACITY OF THE BEAM FOR THE GIVEN SPAN. IN NO CASE SHALL THE CONNECTION HAVE LESS THAN THE MINIMUM NUMBER OF BOLTS SHOWN IN TABLE I OF THE AISC MANUAL.
6. ALL FIELD CONNECTIONS SHALL BE BOLTED, UNLESS NOTED. BOLTED CONNECTIONS SHALL UTILIZE HIGH STRENGTH BOLTS UNLESS NOTED.
7. GIRT AND PURLIN CONNECTIONS MAY BE WELDED WITH 3/4" ϕ A307 BOLTS.
8. ALL GUSSET PLATES SHALL BE 3/8" THICK MINIMUM.
9. ALL TRUSSES SHALL BE OF SHOP WELDED CONSTRUCTION. FIELD SPLICES SHALL BE APPROVED BY THE ~~ENGINEER~~ WORK AND SHALL BE BOLTED OR WELDED.
10. ALL TRUSS CONNECTIONS SHALL DEVELOP THE FULL DESIGN LOAD INDICATED, BUT NOT LESS THAN 50% OF THE FULL CAPACITY OF THE MEMBER IN TENSION.
11. AXIALLY STRESSED MEMBERS MEETING AT A POINT SHALL HAVE THEIR GRAVITY AXES INTERSECTING AT A JOINT IF PRACTICABLE. IF NOT, PROVISIONS SHALL BE MADE FOR BENDING STRESSES DUE TO THE ECCENTRICITY.
12. TRUSS END CONNECTIONS SHALL HAVE THEIR WORKING POINT ON THE CENTERLINE OF THE COLUMNS.
13. TRUSSES SHALL BE CAMBERED FOR DEAD LOAD ONLY, USING COEFFICIENT FROM AISC "MANUAL OF STEEL CONSTRUCTION."
14. REMOVE PAINT AT EXIST STEEL WHERE NEW WELDED CONNECTIONS ARE REQUIRED.

ROOF LOADS

	METAL DECK	PURLIN	GIRDER OR TRUSS
5 PLY	6	6	6
1" INSULATION	2	2	2
METAL DECK	3	3	3
PURLIN	—	3	3
GIRDER	—	—	6
MECH.	—	10	10
Σ DEAD LOAD	11	24	30
LIVE LOAD	20	20	20
TOTAL	31 P.S.F.	44 P.S.F.	50 P.S.F.

PURLIN — ADD'L. 1K LOAD CONCENTRATED @ ℄
GIRDER OR TRUSS - ADD'L. 2K CONCENTR. @ ℄
} REACTIONS NOT CARRIED OVER.

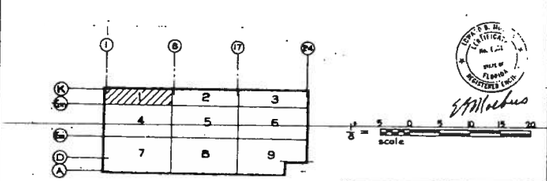

KEY PLAN

CONTRACTOR SHALL VERIFY DIMENSIONS AND CONDITIONS OF EXISTING CONSTRUCTION BEFORE PROCEEDING WITH HIS WORK

NO.	DATE	REVISION	BY	CK	APPR
F	4-8-74	REVISED TO AS BUILT	RP	H.P.	HPB
E	2-25-74	RELEASED TO FACILITY ENGR'G.	K.T.	AP	
D	9-6-74	REVISED AS SHOWN	K.T.	AP	
C	3-26-74	REVISED AS SHOWN	K.T.		
B	4-9-74	REVISED AS SHOWN	K.T.	A.P.	
A	2-22-74	AS SHOWN. ISSUED FOR CONSTR.	K.T.	AP	

Released for construction
Released for bidding
Released for information only.

DRAWN BY K. TIEDEMANN
DEPT. CK. A.P. & R.R.
DEPT. APPR.
COORD. CK.
P. M. APPR.
CLIENT APPR.

LOCKWOOD GREENE
ARCHITECTS · ENGINEERS
REYNOLDS, SMITH AND HILLS
FRIEDRIC R. HARRIS, INC.
FERENDINO, GRAFTON, SPILLIS, CANDELA

Offshore Power Systems
A Westinghouse Enterprise
8000 Arlington Expressway
Jacksonville, Florida

SHEET TITLE: PIPE / OUTFITTING SHOP AREA I — PART PLAN ROOF FRAMING

JOB NO. LG 72250
DATE 6-25-73
SCALE 1" = 1'-0"
DWG. NO. 3A-4-3001-F

THIS DOCUMENT IS THE PROPERTY OF, AND CONTAINS PROPRIETARY INFORMATION OWNED BY, OFFSHORE POWER SYSTEMS. IT IS LOANED AVAILABLE TO YOU UNDER A CONFIDENTIAL RELATIONSHIP AND SUBJECT TO THE FOLLOWING RESTRAINING CONDITIONS AND RESTRICTIONS: NO PERMISSION IS GRANTED TO PUBLISH, USE, REPRODUCE, TRANSMIT OR DISCLOSE TO ANOTHER THIS DOCUMENT OR THE INFORMATION CONTAINED THEREIN WITHOUT WRITTEN AUTHORIZATION FROM THE OFFSHORE POWER SYSTEMS IN JACKSONVILLE.

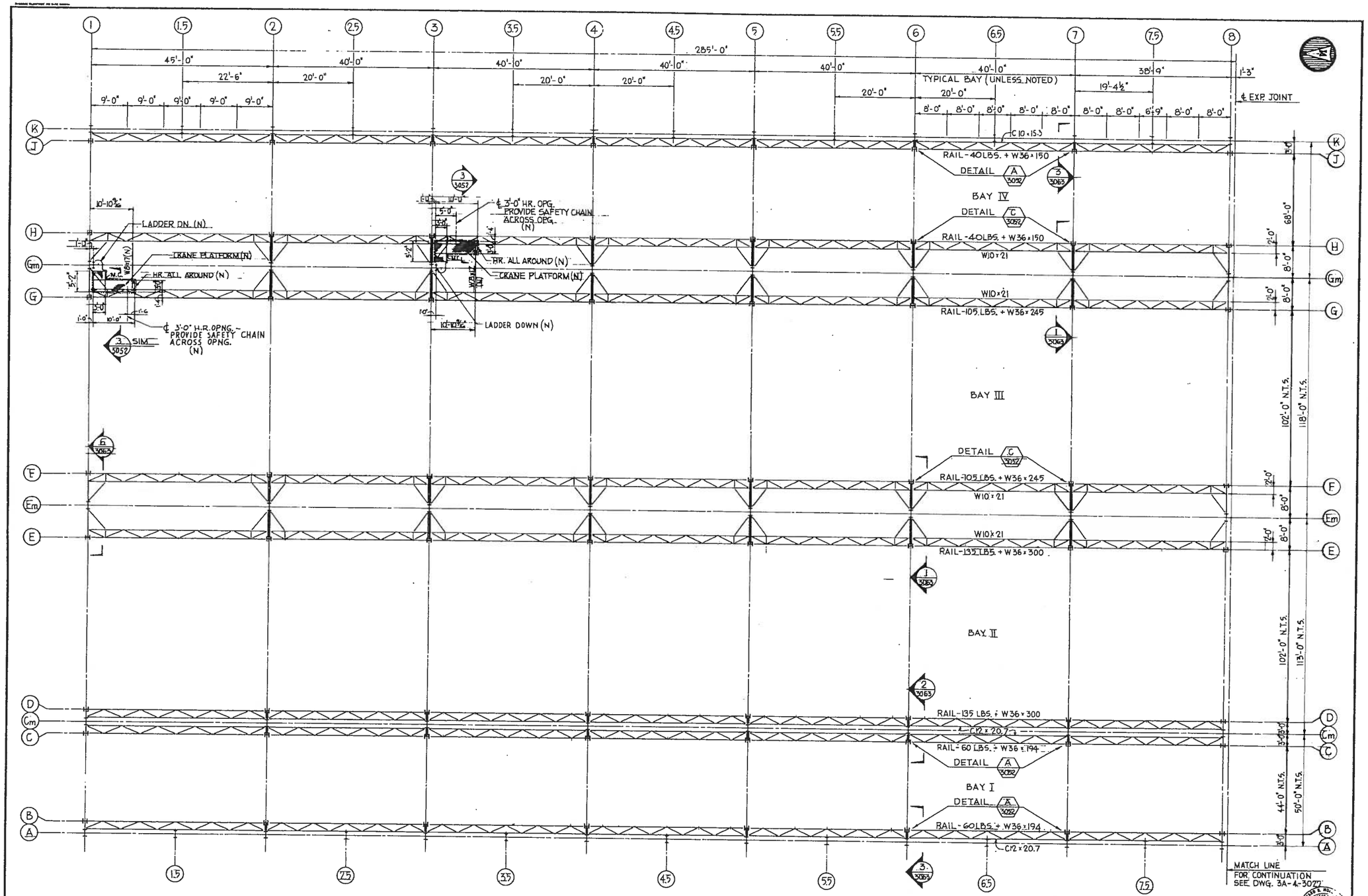

GENERAL CRANE RUNWAY NOTES

1. ALL CRANE RAILS 104 LB/YD AND HEAVIER SHALL BE FULLY HEAT-TREATED CARBON STEEL CRANE RAILS, AND ALL CRANE RAILS LIGHTER THAN 104 LB/YD SHALL BE NEW RAILS MEETING THE REQUIREMENTS ASTM A1.
2. CRANE RAIL SPLICES SHALL BE EITHER BOLTED TIGHT JOINTS OR FIELD WELDED JOINTS. IF WELDED JOINTS ARE USED, THE RAIL ENDS SHALL BE PREPARED FOR WELDING AND THE THERMIT "SELF PREHEAT" SYSTEM SHALL BE USED. JOINTS SHALL BE GROUND SMOOTH AFTER WELDING.
3. CRANE RAILS SHALL BE ARRANGED SO THAT JOINTS OR OPPOSITE SIDES OF THE CRANE RUNWAY WILL BE STAGGERED WITH RESPECT TO EACH OTHER AND WITH RESPECT TO THE WHEELBASE OF THE CRANE. RAIL JOINTS SHOULD NOT OCCUR AT CRANE GIRDER SPLICES.
4. CRANE RAILS SHALL BE FASTENED TO GIRDERS WITH FLOATING CLAMPS (ECCENTRIC FILLERS, H.S. BOLTS OR DOUBLED THREADED STUDS AND HIGH STRENGTH LOCKNUTS (WITHLENGTH ANCH OR EQUAL).
5. MAXIMUM SPACING FOR CRANE RAIL CLAMPS SHALL BE 2' - 0" FOR RAILS 85 LB/YD AND HEAVIER AND 3' - 0" FOR RAILS LESS THAN 85 LB/YD. CLAMPS SHALL NOT BE STAGGERED BUT SHALL BE USED IN PAIRS.
6. CRANE RUNWAY GIRDERS: HORIZONTAL SWEEP IN CRANE RUNWAY GIRDERS SHALL NOT EXCEED ¼ IN. PER 50' - 0" OF LENGTH OF GIRDER SPANS. CAMBER SHALL NOT EXCEED PLUS OR MINUS ¼ IN. PER 50' - 0" GIRDER SPAN, OVER THAT INDICATED ON THE DESIGN DRAWINGS.
7. CRANE RAILS: CENTER TO CENTER OF CRANE RAILS SHALL NOT EXCEED PLUS OR MINUS ¼ IN. FROM THE THEORETICAL DIMENSIONS SHOWN ON THE DRAWINGS ADJUSTED TO 68°F. THE HORIZONTAL MISALIGNMENT OF CRANE RAILS SHALL NOT EXCEED ¼ IN. PER 50' - 0" OF RUNWAY WITH A MAXIMUM OF ½ IN. TOTAL DEVIATION FROM THEORETICAL LOCATION. VERTICAL MISALIGNMENT OF CRANE RAILS MEASURED AT CENTERLINE OF COLUMNS SHALL NOT EXCEED 3/8 IN. PER 50' - 0" OF RUNWAY LENGTH OR AISLE WIDTH WITH A MAXIMUM OF ½ IN. TOTAL DEVIATION FROM THEORETICAL LOCATION.

NOTE: ALL CONSTRUCTION IS EXISTING UNLESS INDICATED AS NEW (N).

NOTES:
1. FOR STRUCTURAL STEEL - GENERAL NOTES SEE DWG. 3A-4-3001.
2. FOR LADDER DETAILS SEE DWG. 3A-4-3056.

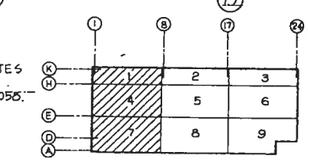

KEY PLAN

1'/8" = 1'-0" scale

CONTRACTOR SHALL VERIFY DIMENSIONS AND CONDITIONS OF EXISTING CONSTRUCTION BEFORE PROCEEDING WITH HIS WORK

THIS DOCUMENT IS THE PROPERTY OF, AND CONTAINS PROPRIETARY INFORMATION OWNED BY OFFSHORE POWER SYSTEMS, AND IS MADE AVAILABLE TO YOU ON A CONFIDENTIAL RELATIONSHIP AND SUBJECT TO THE FOLLOWING UNDERSTANDING. CONSTRUCTION AND RESTRICTIONS: NO PERMISSION IS GRANTED TO PUBLISH, USE, REPRODUCE, TRANSMIT OR DISCLOSE TO ANOTHER THIS DOCUMENT OR ANY INFORMATION CONTAINED THEREIN WITHOUT THE EXPRESS WRITTEN PERMISSION OF THE OFFSHORE POWER SYSTEMS IN ADVANCE.

NO.	DATE	REVISION	BY	CK	APPR	Issue
E	6-25-73	RELEASED TO FACILITY ENG'R'G.	K.T.	A.P.	R.R.	
D	10-25-72	REVISED CRANE RAIL SIZE	L.W.H.			
C	7-12-72	REVISED AS SHOWN	K.T.			Released for construction
B	4-19-72	REVISED AS SHOWN	K.T.	A.P.		Released for bidding
A	3-27-72	REVISED AS SHOWN-ISSUED FOR CONSTR.	L.S.	A.P.	C.H.	Released for information only

DRAWN BY K.T.
DEPT. CK. A.P. & R.R.
DEPT. APPR. R.R.
COORD. CK. C.H.
P. M. APPR. C.H.
CLIENT APPR. R.R. Martin

LOCKWOOD GREENE
ARCHITECTS · ENGINEERS
REYNOLDS, SMITH AND HILLS
FREDERIC R. HARRIS, INC.
FERENDINO, GRAFTON, SPILLIS, CANDELA

Offshore Power Systems
A Westinghouse Enterprise
8000 Arlington Expressway
Jacksonville, Florida

SHEET TITLE
PIPE / OUTFITTING SHOP
AREA 1,4,7 – PART PLANS
CRANE RUNWAY FRAMING

JOB NO. LG.72250
DATE 6-25-73
SCALE 1/8" = 1'-0"
DWG. NO. 3A-4-3021-E

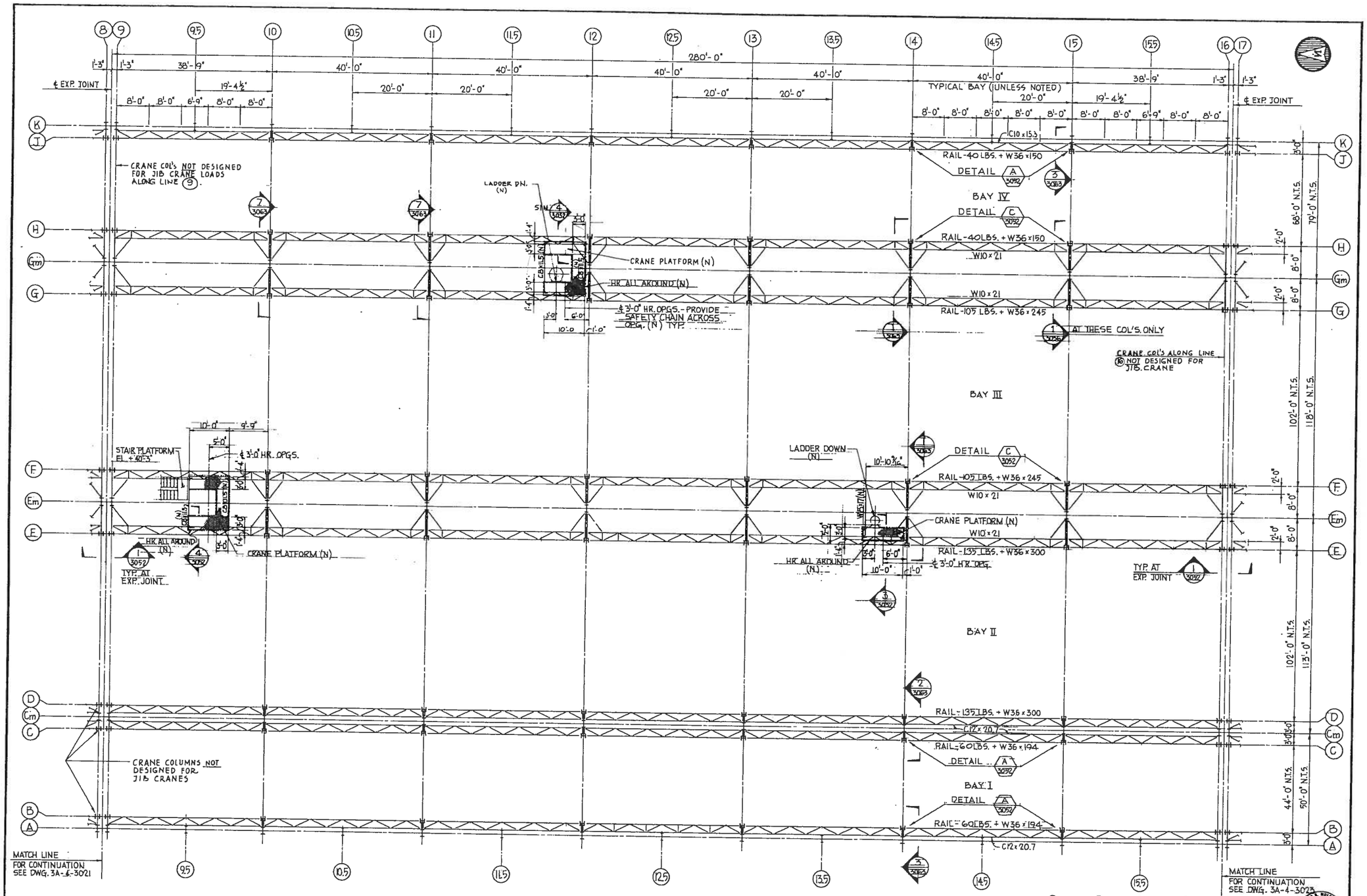

NOTES:

1. FOR STRUCTURAL STEEL - GENERAL NOTES SEE DWG. 3A-4-3001.
2. FOR GENERAL CRANE RUNWAY NOTES SEE DWG. 3A-4-3021.
3. FOR LADDER DETAILS SEE DWG. 3A-4-3058.

NOTE: ALL CONSTRUCTION IS EXISTING UNLESS INDICATED AS NEW (N).

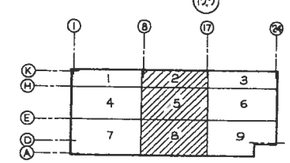

KEY PLAN

1/8" = 1'-0" scale

CONTRACTOR SHALL VERIFY DIMENSIONS AND CONDITIONS OF EXISTING CONSTRUCTION BEFORE PROCEEDING WITH HIS WORK

NO.	DATE	REVISION	BY	CK	APPR	Item
D	4-29-77	RELEASED TO FACILITY ENGR'G.	K.T.	A.P.		Released for construction
C	10-29-75	REVISED CRANE RAIL SIZE	LWH			Released for bidding
B	7-15-75	REVISED AS SHOWN	K.T.			Released for information only
A	3-3-72	AS SHOWN - ISSUED FOR CONSTR.	L.S.	A.P.		

DRAWN BY K. TIEDEMANN
DEPT. CK. A.P. & R.R.
DEPT. APPR. [illegible]
COORD. CK. [illegible]
P.M. APPR. [illegible]
CLIENT APPR. [illegible]

LOCKWOOD GREENE
ARCHITECTS · ENGINEERS
REYNOLDS, SMITH AND HILLS — FREDERIC R. HARRIS, INC.
FERENDINO, GRAFTON, SPILLIS, CANDELA

Offshore Power Systems
A Westinghouse Enterprise
8000 Arlington Expressway
Jacksonville, Florida

SHEET TITLE: PIPE/OUTFITTING SHOP AREA 2,5,8 - PART PLANS CRANE RUNWAY FRAMING

JOB NO. LG 72250
DATE 6-25-73
SCALE 1/8" = 1'-0"
DWG. NO. 3A-4-3022-D

THIS DOCUMENT IS THE PROPERTY OF, AND CONTAINS PROPRIETARY INFORMATION OWNED BY OFFSHORE POWER SYSTEMS, AND IS MADE AVAILABLE TO YOU UNDER A CONFIDENTIAL RELATIONSHIP AND SUBJECT TO THE FOLLOWING UNDERSTANDING. CONDITIONS AND RESTRICTIONS: NO PERMISSION IS GRANTED TO PUBLISH, USE, REPRODUCE, TRANSMIT OR DISCLOSE TO ANOTHER THIS DOCUMENT OR ANY INFORMATION CONTAINED THEREIN WITHOUT THE EXPRESS WRITTEN PERMISSION OF THE OFFSHORE POWER SYSTEMS IN ADVANCE.

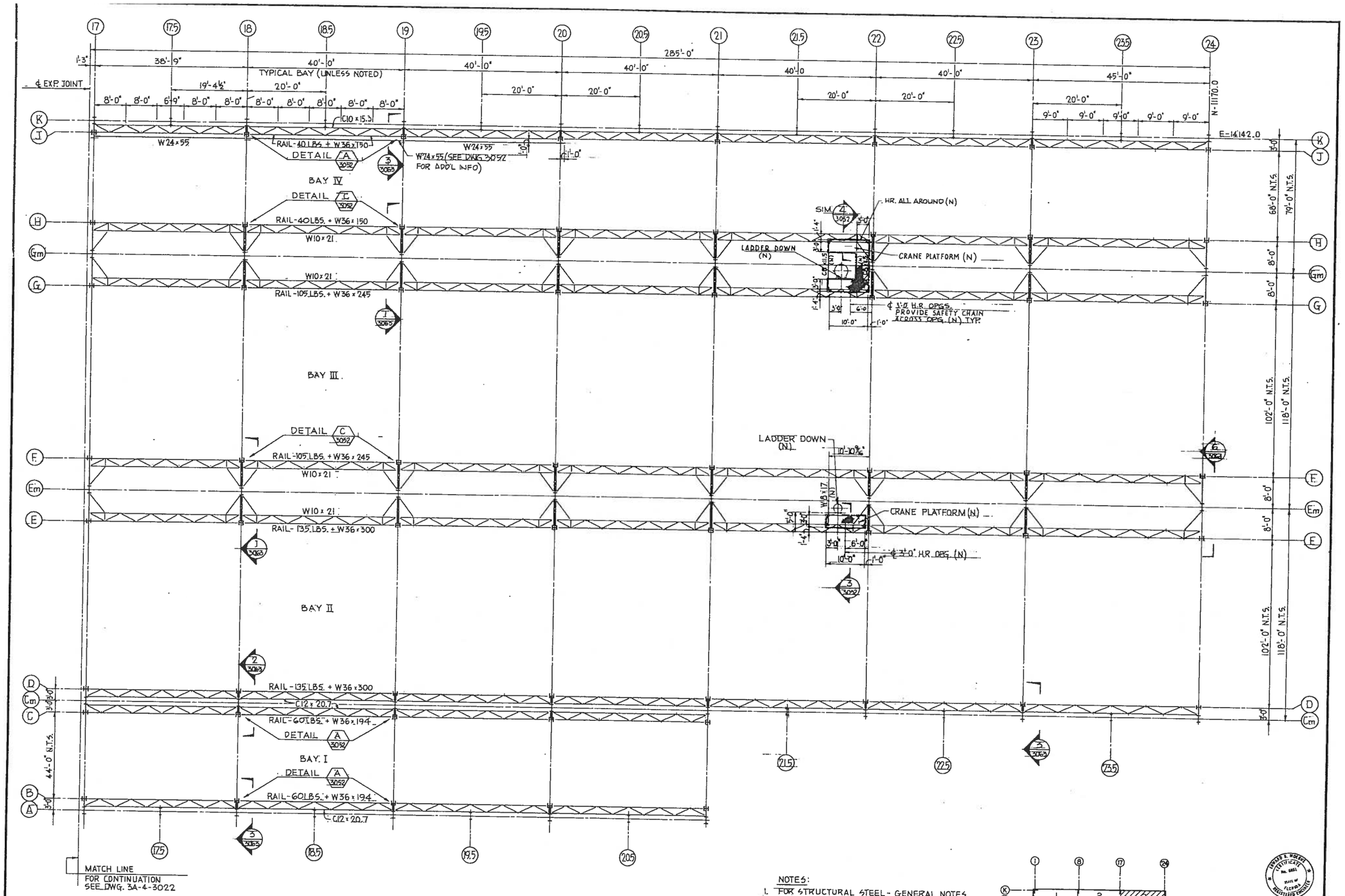

NOTES:

1. FOR STRUCTURAL STEEL - GENERAL NOTES SEE DWG. 3A-4-3001.
2. FOR GENERAL CRANE RUNWAY NOTES SEE DWG. 3A-4-3021.
3. FOR LADDER DETAILS SEE DWG. 3A-4-3058.

NOTE: ALL CONSTRUCTION IS EXISTING UNLESS INDICATED AS NEW (N).

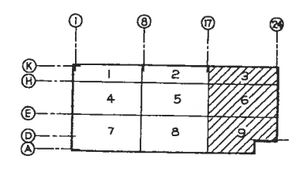

KEY PLAN

1/8" = 5 0 5 10 15 20 scale

CONTRACTOR SHALL VERIFY DIMENSIONS AND CONDITIONS OF EXISTING CONSTRUCTION BEFORE PROCEEDING WITH HIS WORK

THIS DOCUMENT IS THE PROPERTY OF, AND CONTAINS PROPRIETARY INFORMATION OWNED BY OFFSHORE POWER SYSTEMS, AND IS MADE AVAILABLE TO YOU UNDER A CONFIDENTIAL RELATIONSHIP AND SUBJECT TO THE FOLLOWING UNDERSTANDING, CONDITIONS AND RESTRICTIONS: NO PERMISSION IS GRANTED TO PUBLISH, USE, REPRODUCE, TRANSMIT OR DISCLOSE TO ANOTHER THIS DOCUMENT OR ANY INFORMATION CONTAINED THEREIN WITHOUT THE EXPRESS WRITTEN PERMISSION OF THE OFFSHORE POWER SYSTEMS IN ADVANCE.

NO.	DATE	REVISION	BY	CK	APPR
F	4-25-73	RELEASED TO FACILITY ENGR'G	KT	AP	[illegible]

Released for construction
Released for bidding
Released for information only
Item

DRAWN BY K. TIEDEMANN
DEPT. CK. A.P. & R.R.
DEPT. APPR.
COORD. CK.
P.M. APPR.
CLIENT APPR.

LOCKWOOD GREENE
ARCHITECTS · ENGINEERS
REYNOLDS, SMITH AND HILLS — FREDERIC R. HARRIS, INC.
FERENDINO, GRAFTON, SPILLIS, CANDELA

Offshore Power Systems
A Westinghouse Enterprise
8000 Arlington Expressway
Jacksonville, Florida

SHEET TITLE: PIPE / OUTFITTING SHOP AREA 3,6,9 – PART PLANS CRANE RUNWAY FRAMING

JOB NO. LG 72250
DATE 6-25-73
SCALE 1/8" = 1'-0"
DWG. NO. 3A-4-3023-F

COLUMN SCHEDULE

TOP OF ROOF EL. VARIES / TOP OF CRANE RAIL EL. VARIES / TOP OF SLAB ON GRADE EL. 0'-0" / BOTTOM OF BASE PLATE

COLUMN No.	A-2 A-21 A-3 A-4 A-5 A-6 A-7 A-10 A-12 A-13 A-14 A-15 A-18 A-19 A-20	A-1 A-8 A-9 A-16 A-17	B-1 B-2 B-17 B-3 B-18 B-4 B-19 B-5 B-20 B-6 B-21 B-7 B-9 B-10 B-11 B-12 B-13 B-14 B-15	C-1 C-2 C-17 C-3 C-18 C-4 C-19 C-5 C-20 C-6 C-21 C-7 C-9 C-10 C-11 C-12 C-13 C-14 C-15	Cm-2 Cm-3 Cm-6 Cm-7 Cm-10 Cm-11 Cm-14 Cm-15 Cm-18 Cm-19	Cm-1 Cm-8 Cm-9 Cm-16 Cm-17	Cm-4 Cm-5 Cm-12 Cm-13 Cm-20 Cm-21	Cm-22 Cm-23	Cm-24	D-1 D-2 D-17 D-3 D-18 D-4 D-19 D-5 D-20 D-6 D-21 D-7 D-9 D-10 D-11 D-12 D-13 D-14 D-15	D-22 D-23 D-24	E-1 E-16 E-2 E-17 E-3 E-18 E-4 E-19 E-5 E-20 E-6 E-21 E-7 E-22 E-8 E-23 E-9 E-24 E-10 E-11 E-12 E-13 E-14 E-15
SECTION	W21x73	W21x62	W14x95	W14x119	W24x94	W24x76 10½" TYP. U.N.	W24x94	W21x82	W21x62	W14x158	W14x119	W14x127
BASE PLATE SIZE t x A x B	3¼" x 29" x 2'-6"	2¼" x 21" x 2'-6"	1¼" x 17" x 1'-10"	1½" x 17" x 1'-10"	¾" x 13" x 2'-2"	¾" x 10" x 2'-2"	¾" x 13" x 2'-2"	3¼" x 29" x 2'-6"	2¼" x 22" x 2'-6"	2½" x 28" x 2'-6"	1¾" x 24" x 2'-2"	2¼" x 27" x 2'-5"
BASE PLATE TYPE	I	II	III	III	FOR BASE PL DETAILS SEE DET. B/3063			I	II	III	III	III

COLUMN No.	Em-2 Em-3 Em-6 Em-7 Em-10 Em-11 Em-14 Em-15 Em-18 Em-19	Em-1 Em-8 Em-9 Em-16 Em-17	Em-4 Em-5 Em-12 Em-13 Em-20	Em-22 Em-23 Em-21	Em-24	F-1 F-16 F-2 F-17 F-3 F-18 F-4 F-19 F-5 F-20 F-6 F-21 F-7 F-22 F-8 F-23 F-9 F-24 F-10 F-11 F-12 F-13 F-14 F-15	G-1 G-16 G-2 G-17 G-3 G-18 G-4 G-19 G-5 G-20 G-6 G-21 G-7 G-22 G-8 G-23 G-9 G-10 G-11 G-12 G-13 G-14 G-15	Gm-2 Gm-3 Gm-6 Gm-7 Gm-10 Gm-11 Gm-14 Gm-15 Gm-18 Gm-4 Gm-5 Gm-12 Gm-13 Gm-20	Gm-1 Gm-8 Gm-9 Gm-16 Gm-17	Gm-21 Gm-22 Gm-23	H-1 H-16 H-2 H-17 H-3 H-18 H-4 H-19 H-5 H-20 H-6 H-21 H-7 H-22 H-8 H-23 H-9 H-10 H-11 H-12 H-13 H-14 H-15	J-1 J-2 J-17 J-3 J-18 J-4 J-19 J-5 J-20 J-6 J-21 J-7 J-22 J-23 J-9 J-24 J-10 J-11 J-12 J-13 J-14 J-15
SECTION	W24x100	W24x84	W24x100	W24x110	W24x94 (D)	W14x119	W14x111	W24x100	W24x76	W24x110	W14x78	W14x78
BASE PLATE SIZE t x A x B	¾" x 13" x 2'-2"	¾" x 10" x 2'-2"	¾" x 13" x 2'-2"	¾" x 12" x 2'-2"	¾" x 10" x 2'-2"	2" x 26" x 2'-4"	2" x 26" x 2'-4"	¾" x 12" x 2'-2"	¾" x 10" x 2'-2"	¾" x 12" x 2'-2"	1½" x 19" x 2'-0"	1¼" x 17" x 1'-10"
BASE PLATE TYPE	FOR BASE PL DETAILS SEE DET. B/3063					III	III	FOR BASE PL DETAILS SEE DET. B/3063			III	III

COLUMN No.	K-1 K-8 K-17 K-24 K-9 K-16	K-2 K-19 K-3 K-20 K-21 K-5 K-22 K-6 K-23 K-7 K-10 K-11 K-13 K-14 K-15 K-18	K-1.5 K-2.5 K-4.5 K-5.5 K-6.5 K-7.5 K-9.5 K-10.5 K-12.5 K-13.5 K-14.5 K-17.5 K-19.5 K-22.5 K-23.5	A-1.5 A-12.5 A-2.5 A-13.5 A-3.5 A-14.5 A-4.5 A-17.5 A-5.5 A-19.5 A-7.5 A-20.5 A-10.5 A-11.4 Cm-22.5 Cm-23.5	Bs-1 Dd-24 Dw-24 Fe-24 Dj-1 Fj-24 Dr-1 Fp-24 Dt-1 Fv-24 Dv-1 Hg-24 Fe-1 Hu-24 Fj-1 Fr-1 Fw-1 Hf-1 Hp-1 Hv-1	Dh-24 Ds-24	A-9.5 A-15.5 A-18.5 Dm-24 K-3.5 K-11.5 K-15.5 K-18.5	K-20.5 K-21.5 Hm-24	A-6.5	A-9.3 A-9.7 A-15.2 A-18.2 A-18.8 K-3.2 K-11.2 K-15.2 K-18.3 K-18.9	K-20.3 K-20.8 K-21.2 K-21.7 Hj-24 Ht-24 Dg-1 (C)	A-6.2 A-6.6	Gm-24
SECTION	W21x55	W21x73	W21x49 BOTT. OF ROOF TRUSS	W21x49	W21x49	W21x55	W12x27	W12x27	W12x31	W12x27	W12x27	W12x27	W24x94 (D)
BASE PLATE SIZE t x A x B	1¾" x 18" x 2'-6"	2¼" x 25" x 2'-6"	¾" x 9" x 2'-0"	¾" x 9" x 2'-0"	¾" x 9" x 2'-0"	¾" x 9" x 2'-0"	½" x 8" x 1'-1"	½" x 8" x 1'-1"	½" x 8" x 1'-1"	½" x 9" x 1'-2"	½" x 9" x 1'-2"	½" x 9" x 1'-2"	¾" x 10" x 2'-2"
BASE PLATE TYPE	II	I	IV	IV	IV	IV				V	V	V	SEE Gm COL'S.

FOR CONN. DETAILS SEE SECTION 2/3062 TYP.

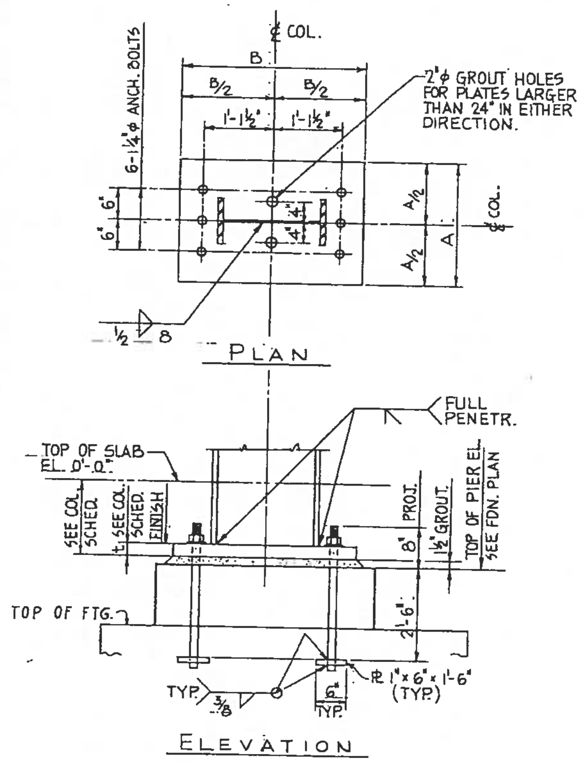

BASE PLATE TYPE II

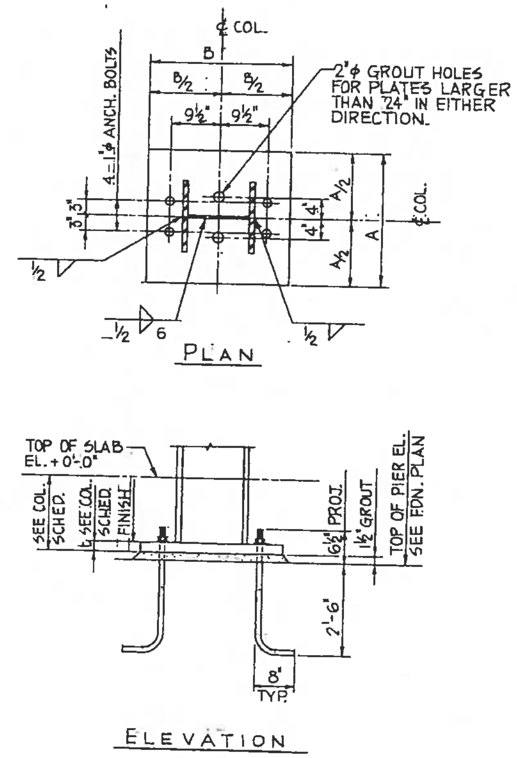

BASE PLATE TYPE III

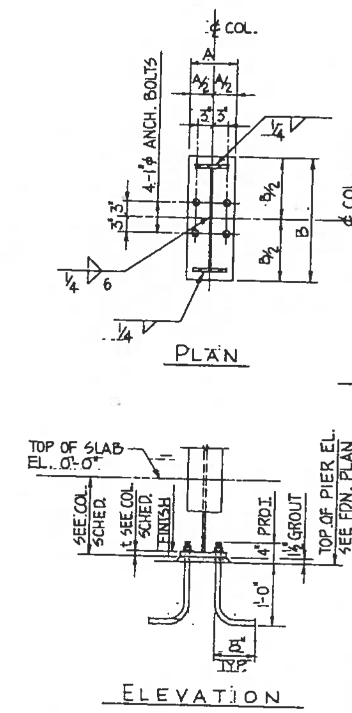

BASE PLATE TYPE IV

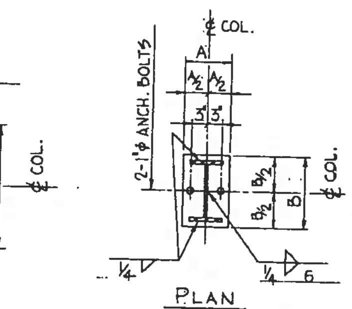

BASE PLATE TYPE V

NOTE: FOR ELEVATION SEE TYPE IV

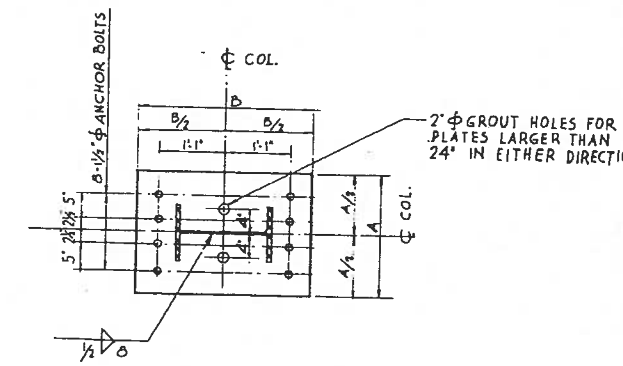

BASE PLATE TYPE I

NOTE: FOR ELEVATION SEE TYPE II

NOTE: 1. ALL WORK IS EXISTING UNLESS INDICATED AS NEW (N).

2. CONTRACTOR SHALL CONFIRM ACTUAL ELEVATIONS OF EXISTING WORK AND ADJUST MEETING WORK TO MATCH.

(E)

NOTES:

1. FOR STRUCTURAL STEEL - GENERAL NOTES SEE DWG. 3A-4-3001.
2. FOR CONTINUATION OF COLUMN SCHEDULE SEE DWG. 3A-4-3036.
3. ALL ANCHOR BOLTS FURNISHED BY STEEL CONTR. AND INSTALLED BY FOUNDATION CONTRACTOR.
4. ALL GROUT UNDER COLUMN BASE PL'S SHALL BE FURNISHED & INSTALLED BY FDTN. CONTRACTOR.
5. ALL BASE PL'S SHALL BE WELDED TO COLUMNS IN SHOP.

3A 22

THIS DOCUMENT IS THE PROPERTY OF, AND CONTAINS PROPRIETARY INFORMATION OWNED BY OFFSHORE POWER SYSTEMS, AND IS MADE AVAILABLE TO YOU UNDER A CONFIDENTIAL RELATIONSHIP AND SUBJECT TO THE FOLLOWING UNDERSTANDING, CONDITIONS AND RESTRICTIONS: NO PERMISSION IS GRANTED TO PUBLISH, USE, REPRODUCE, TRANSMIT OR DISCLOSE TO ANOTHER THIS DOCUMENT OR ANY INFORMATION CONTAINED THEREIN WITHOUT THE EXPRESS WRITTEN PERMISSION OF THE OFFSHORE POWER SYSTEMS IN ADVANCE.

EDWARD B. MOEBUS CERTIFICATE No. 6851 STATE OF FLORIDA REGISTERED ENGR.

NO.	DATE	REVISION	BY	CK	APPR
F	12-1-71	REVISE TO AS BUILT	R.P.		
E	6-8-74	RELEASED TO FACILITY ENGR'G.	K.T.	AP	
D	7-12-74	REVISED AS SHOWN	K.T.		
C	5-24-74	REVISED AS SHOWN	K.T.	AP	
B	4-19-74	REVISED AS SHOWN	K.T.	AP	
A	3-22-74	REVISED AS SHOWN. ISSUED FOR CONSTR.	L.S.	AP	

Released for construction
Released for bidding
Released for information only
Item

DRAWN BY K. TIEDEMANN
DEPT. CK. A.P. & R.R.
DEPT. APPR.
COORD. CK. A.P.
P. M. APPR.
CLIENT APPR.

LOCKWOOD GREENE
ARCHITECTS · ENGINEERS
REYNOLDS, SMITH AND HILLS · FREDERIC R. HARRIS, INC. · FERENDINO, GRAFTON, SPILLIS, CANDELA

Offshore Power Systems
A Westinghouse Enterprise
8000 Arlington Expressway
Jacksonville, Florida

SHEET TITLE: PIPE / OUTFITTING SHOP COLUMN SCHEDULE AND DETAILS SHEET 1

JOB NO.	DATE
LG 72250	12-10-1973
SCALE	DWG. NO.
NO SCALE	3A-4-3035-F

COLUMN SCHEDULE

COLUMN No.	J-8 J-16	Aa-21.1 Aa-21.9 Cd-21.1 Cd-21.9	Bn-21.1	Cm-21.5	Bn-21	B-8 B-16	Bn-21.9	K-4 K-12	A-11	Bg-1	C-8 C-16	D-8 D-16	G-24	H-24	K-3.7 Bg-21 Bs-21	Cm-21.5
TOP OF ROOF EL. VARIES		VOID														
BOTTOM OF TRUSS																
TOP OF CRANE RAIL EL. VARIES				W12x27	W12x27											
TOP OF SLAB ON GRADE EL. 0'-0"	W14x53	W14x87	W14x95	10½ TYP. UN.		W14x61	W14x95 + PL ½"x12"x1'-0"	W21x73	W21x73	W21x112	W14x87	W14x127	W14x142	W14x103	W12x27	W21x49
BOTTOM OF BASE PLATE																
BASE PLATE SIZE (B, A×B)	1"x16"x1'-9"	2½"x22"x1'-10"	2"x22"x1'-10"	¾"x7"x1'-1"	½"x8"x1'-1"	¾"x17"x1'-10"	2½"x22"x1'-10"	2"x22"x2'-10"	2½"x24"x3'-0"	¾"x9"x2'-0"	1¼"x17"x1'-10"	2¼"x28"x2'-6"	2"x26"x2'-4"	1½"x19"x2'-0"	½"x9"x1'-2"	¾"x9"x2'-0"
BASE PLATE TYPE	III	VI	VII	SEE DET. 6/3062?		III	VII	I	I	IV	III	III	III	III	V	IV

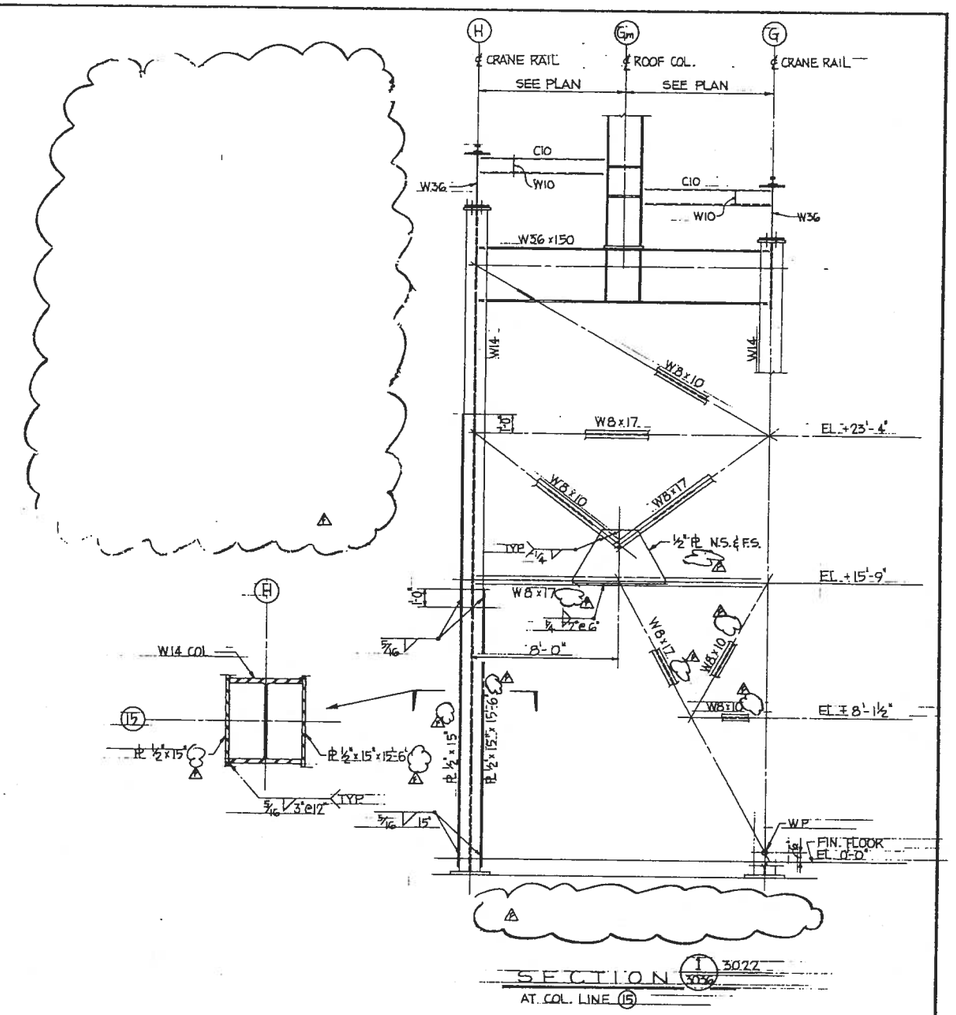

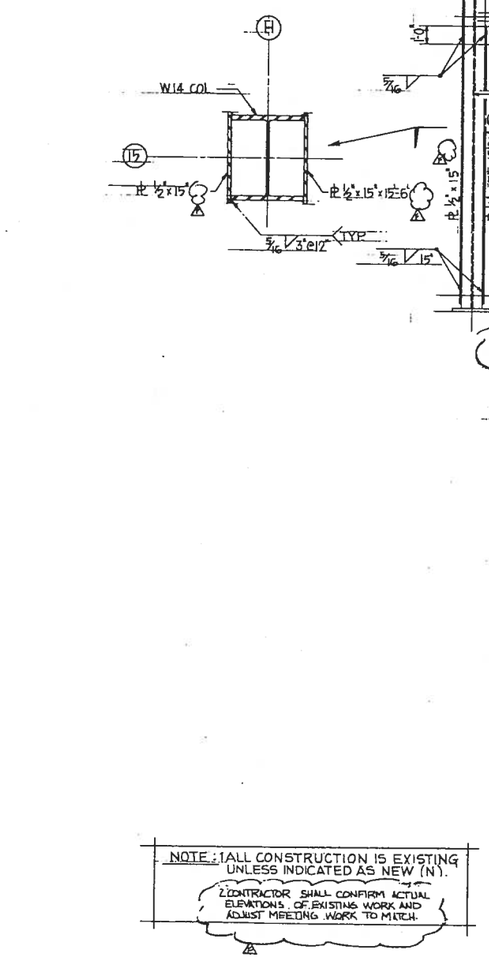

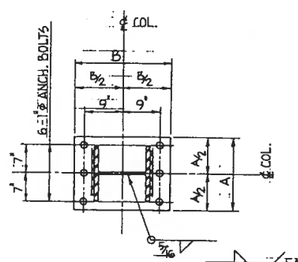

PLAN

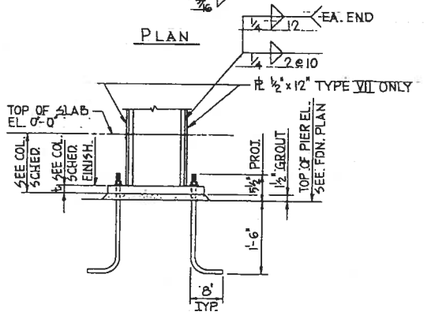

ELEVATION

BASE PLATE TYPE VI

BASE PLATE TYPE VII

NOTES:

1. FOR STRUCTURAL STEEL - GENERAL NOTES SEE DWG. 3A-4-3001.
2. ALL ANCHOR BOLTS FURNISHED BY STEEL CONTR., AND INSTALLED BY FOUNDATION CONTRACTOR.

NOTE: 1. ALL CONSTRUCTION IS EXISTING UNLESS INDICATED AS NEW (N).
2. CONTRACTOR SHALL CONFIRM ACTUAL ELEVATIONS OF EXISTING WORK AND ADJUST MEETING WORK TO MATCH.

3A.22

THIS DOCUMENT IS THE PROPERTY OF, AND CONTAINS PROPRIETARY INFORMATION OWNED BY OFFSHORE POWER SYSTEMS, AND IS MADE AVAILABLE TO THE RECEIVER CONFIDENTIALLY. RECEIVER'S USE IS LIMITED TO ITS OWN INCONTROVERTIBLE UNDERSTANDING, CONDITIONS AND RESTRICTIONS. NO PERMISSION IS GRANTED TO PUBLISH, USE, REPRODUCE, TRANSMIT OR DISCLOSE TO ANOTHER THIS DOCUMENT OR ANY INFORMATION CONTAINED THEREIN WITHOUT THE EXPRESS WRITTEN PERMISSION OF THE OFFSHORE POWER SYSTEMS IN ADVANCE.

CONTRACTOR SHALL VERIFY DIMENSIONS AND CONDITIONS OF EXISTING CONSTRUCTION BEFORE PROCEEDING WITH HIS WORK

NO.	DATE	REVISION	BY	CK	APPR
F	2-2-74	REVISED TO AS BUILT	R.P.	WRB	RRB
E	12-5-73	RELEASED TO FACILITY ENGR'G.	K.L.	RP	
D	10-8-73	DELETED CLEAN ROOM STEEL	LWH		
C	1-8-73	REVISED AS SHOWN	K.T.		
B	11-17-72	REVISED AS SHOWN	K.T.	RP	
A	1-22-72	REVISED AS SHOWN. ISSUED FOR CONSTR.	L.S.	RP	CHK

Released for construction		
Released for bidding		
Released for information only	F	11-10-75 Released by Project Manager of Shipyard Engineering

DRAWN BY K. TIEDEMANN
DEPT. CK. & P.E. R.R.
DEPT. APPR.
COORD. CK. A.P.
P.M. APPR. CHK
CLIENT APPR. T. O. Marks

LOCKWOOD GREENE
ARCHITECTS · ENGINEERS
REYNOLDS, SMITH AND HILLS
FREDERIC R. HARRIS, INC.
FERENDINO, GRAFTON, SPILLIS, CANDELA

Offshore Power Systems
A Westinghouse Enterprise
8000 Arlington Expressway
Jacksonville, Florida

SHEET TITLE
PIPE / OUTFITTING SHOP
COLUMN SCHEDULE AND DETAILS
SHEET 2

JOB NO. LG 72250
DATE 2-1-74
SCALE NO SCALE
DWG. NO. 3A-4-3036-F

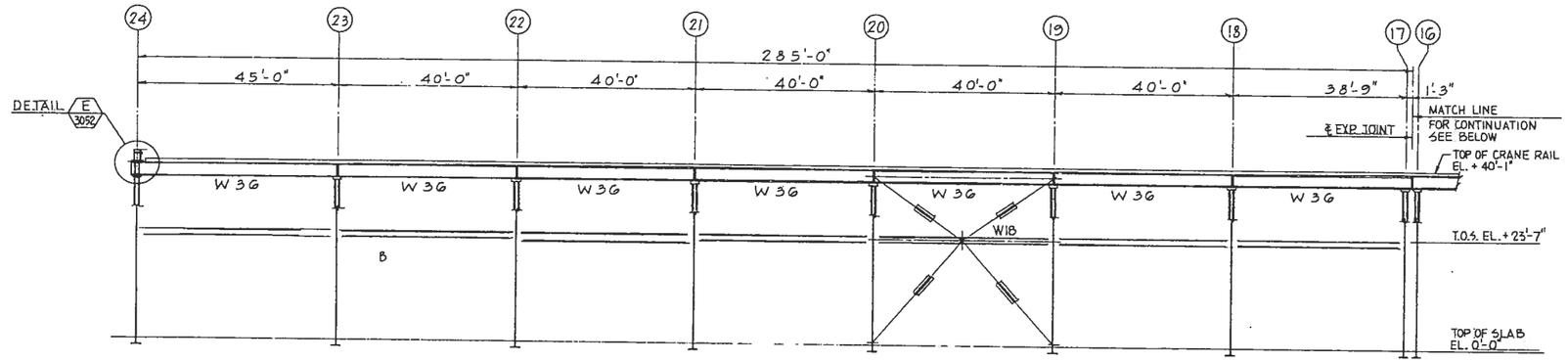

EAST ELEVATION OF COLUMN LINE H (PARTIAL CRANE RAIL).

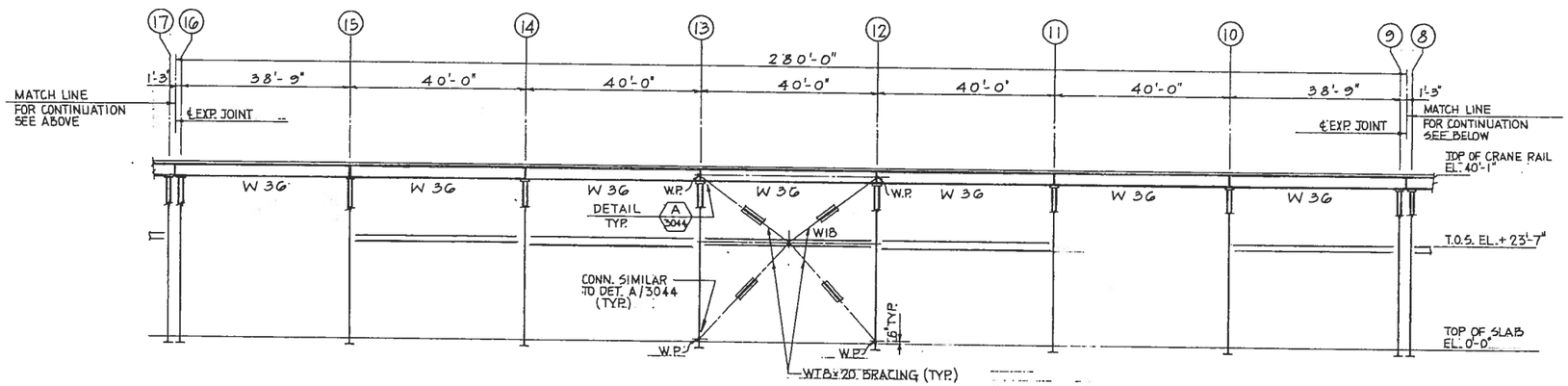

EAST ELEVATION OF COLUMN LINE H (PARTIAL CRANE RAIL).

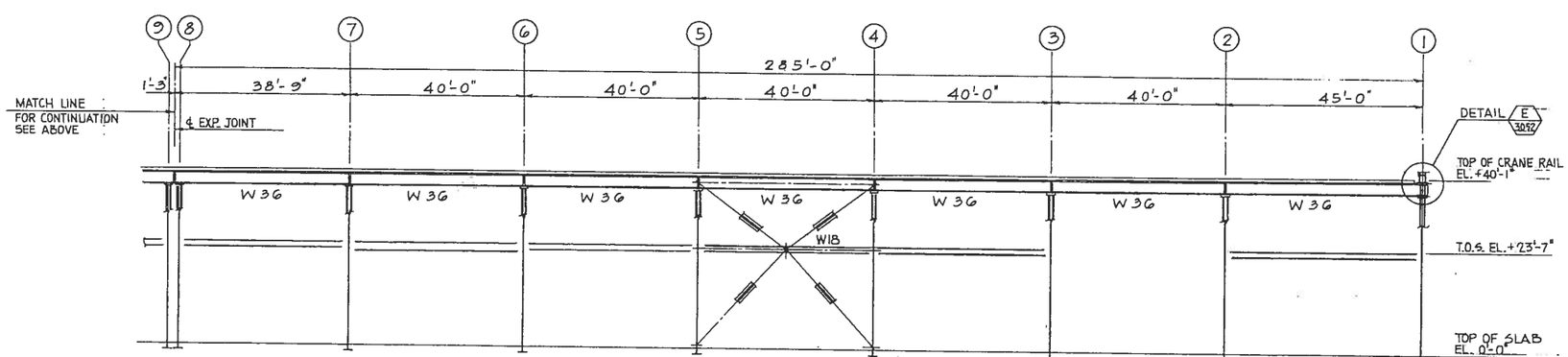

EAST ELEVATION OF COLUMN LINE H (PARTIAL CRANE RAIL).

NOTE: 1. ALL CONSTRUCTION EXISTING EXCEPT WHERE INDICATED AS NEW (N).
2. CONTRACTOR SHALL CONFIRM ACTUAL ELEVATIONS OF EXISTING WORK AND ADJUST MEETING WORK TO MATCH.

3/32" = 4 0 4 8 12 16 20 24 28 scale

THIS DOCUMENT IS THE PROPERTY OF, AND CONTAINS PROPRIETARY INFORMATION OWNED BY OFFSHORE POWER SYSTEMS, AND IS MADE AVAILABLE TO YOU UNDER A CONFIDENTIAL RELATIONSHIP AND SUBJECT TO THE FOLLOWING UNDERSTANDING, CONDITIONS AND RESTRICTIONS: NO PERMISSION IS GRANTED TO PUBLISH, USE, REPRODUCE, TRANSMIT OR DISCLOSE TO ANOTHER THIS DOCUMENT OR ANY INFORMATION CONTAINED THEREIN WITHOUT THE EXPRESS WRITTEN PERMISSION OF THE OFFSHORE POWER SYSTEMS IN ADVANCE.

NO.	DATE	REVISION	BY	CK	APPR	Item	Rev.	
D	2-1-74	REVISED TO AS BUILT	R.P.	BRC	BRC	Released for construction		
C	6-27-73	REVISED TO FACILITY ENGR'S		AP	FSB	Released for bidding		
B	7-13-74	REVISED AS SHOWN	K.T.			Released for information only	D	W. Bowman
A	3-28-74	AS SHOWN. ISSUED FOR CONSTR.	CT	AP	CHK			

DRAWN BY P.C. & K.T.
DEPT. CK. A.P. & R.R.
DEPT. APPR.
COORD. CK.
P.M. APPR.
CLIENT APPR.

LOCKWOOD GREENE
ARCHITECTS · ENGINEERS
REYNOLDS, SMITH AND HILLS — FREDERIC R. HARRIS, INC.
FERENDINO, GRAFTON, SPILLIS, CANDELA

Offshore Power Systems
A Westinghouse Enterprise
8000 Arlington Expressway
Jacksonville, Florida

SHEET TITLE
PIPE / OUTFITTING SHOP
ELEVATIONS OF CRANE RUNWAY

JOB NO. LG. 72250
DATE 2-1-74
SCALE 3/32" = 1'-0"
DWG. NO. 3A-4-3050-D

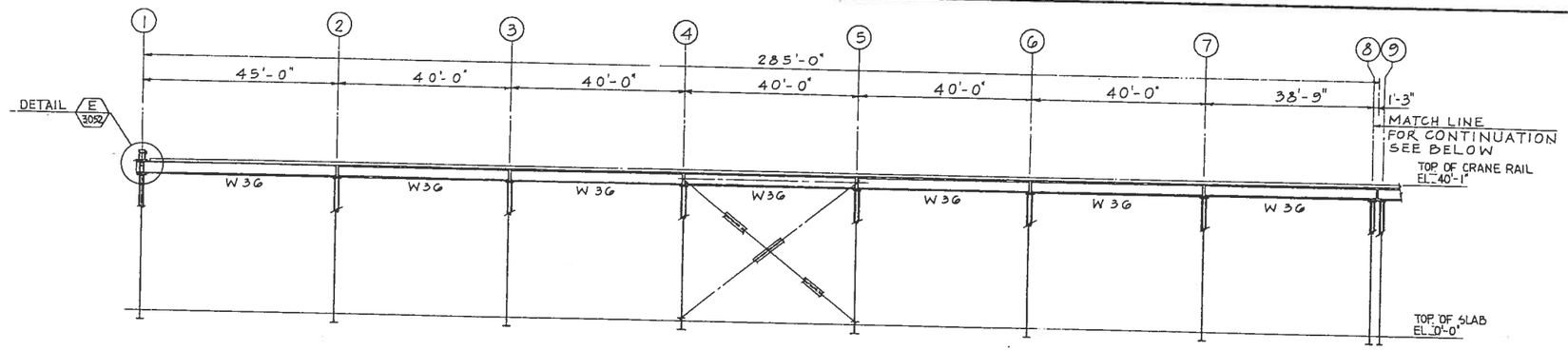

WEST ELEVATION OF COL. LINE J (PART CRANE RAIL)

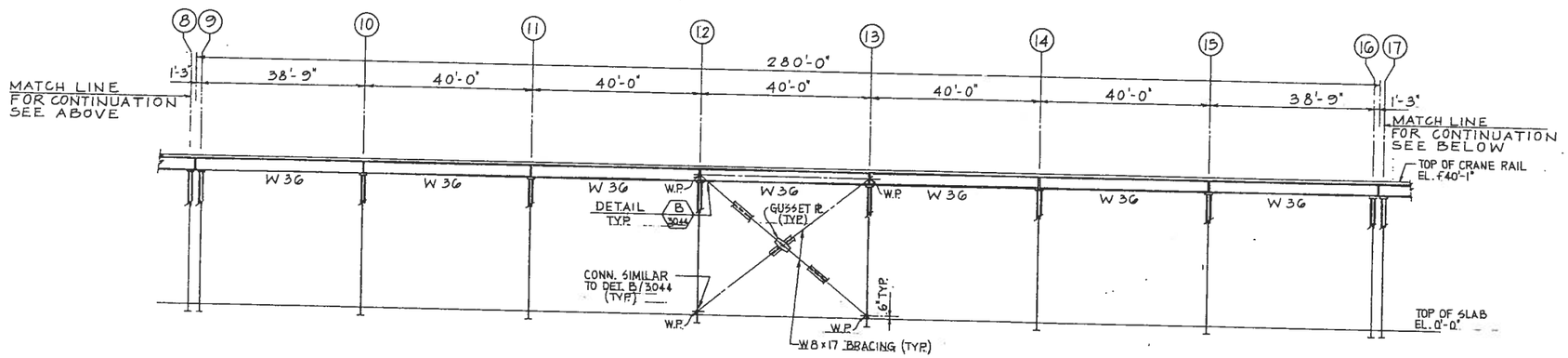

WEST ELEVATION OF COL. LINE J (PART CRANE RAIL)

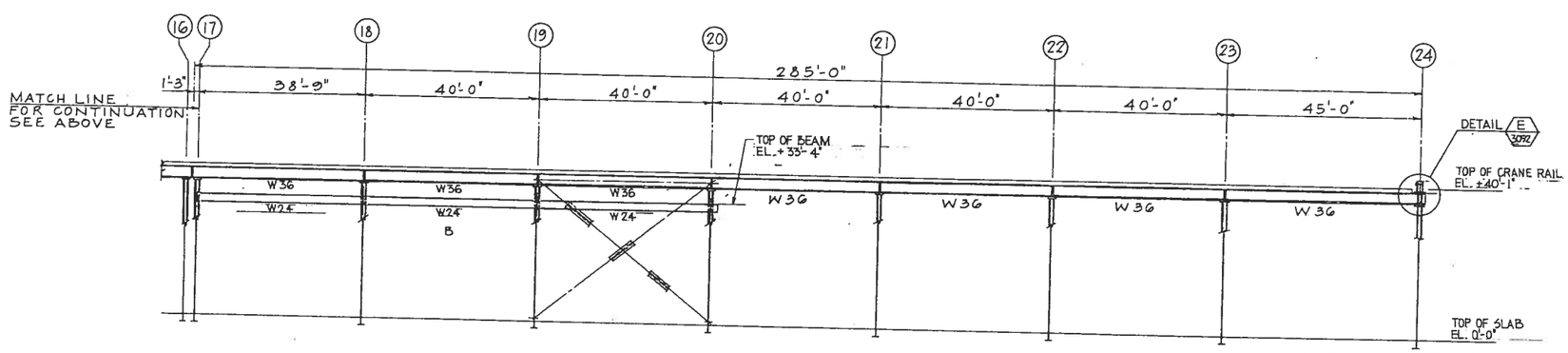

WEST ELEVATION OF COL. LINE J (PART CRANE RAIL)

NOTE: 1. ALL CONSTRUCTION EXISTING EXCEPT WHERE INDICATED AS NEW (N).
2. CONTRACTOR SHALL CONFIRM ACTUAL ELEVATIONS OF EXISTING WORK AND ADJUST MEETING WORK TO MATCH.

3/32" = 1'-0" scale

NO.	DATE	REVISION	BY	CK	APPR
D		REVISED TO AS BUILT	RP	WB	WB
C	8-29-77	REVISED TO FACILITY DWGS		WP	PEA
B	5-1-74	REVISED AS SHOWN	K.T.	RP	
A	3-27-74	ISSUED FOR CONSTR.	K.T.	AP	CAR

Released for construction	
Released for bidding	
Released for information only	
Item	rev.

DRAWN BY P.C. & K.T.
DEPT. CK. A.P. & R.R.
DEPT. APPR. RP
COORD. CK. CAR
P. M. APPR. CAR
CLIENT APPR. RP

LOCKWOOD GREENE
ARCHITECTS · ENGINEERS
REYNOLDS, SMITH AND HILLS
FREDERIC R. HARRIS, INC.
FERENDINO, GRAFTON, SPILLIS, CANDELA

Offshore Power Systems
A Westinghouse Enterprise
8000 Arlington Expressway
Jacksonville, Florida

SHEET TITLE: PIPE / OUTFITTING SHOP ELEVATIONS OF CRANE RUNWAY

JOB NO. LG-72250
DATE 2-1-74
SCALE 3/32" = 1'-0"
DWG. NO. 3A-4-3051-D

THIS DOCUMENT IS THE PROPERTY OF, AND CONTAINS PROPRIETARY INFORMATION OWNED BY OFFSHORE POWER SYSTEMS, AND IS BEING FURNISHED TO YOU UNDER A CONFIDENTIAL RELATIONSHIP AND SUBJECT TO THE FOLLOWING UNDERSTANDING AND CONDITIONS AND RESTRICTIONS: NO PERMISSION IS GRANTED TO PUBLISH, USE, REPRODUCE, OR DISCLOSE OR DISCLOSE TO ANOTHER THIS DOCUMENT OR ANY INFORMATION CONTAINED THEREIN WITHOUT THE EXPRESS WRITTEN PERMISSION OF THE OFFSHORE POWER SYSTEMS IN ADVANCE.

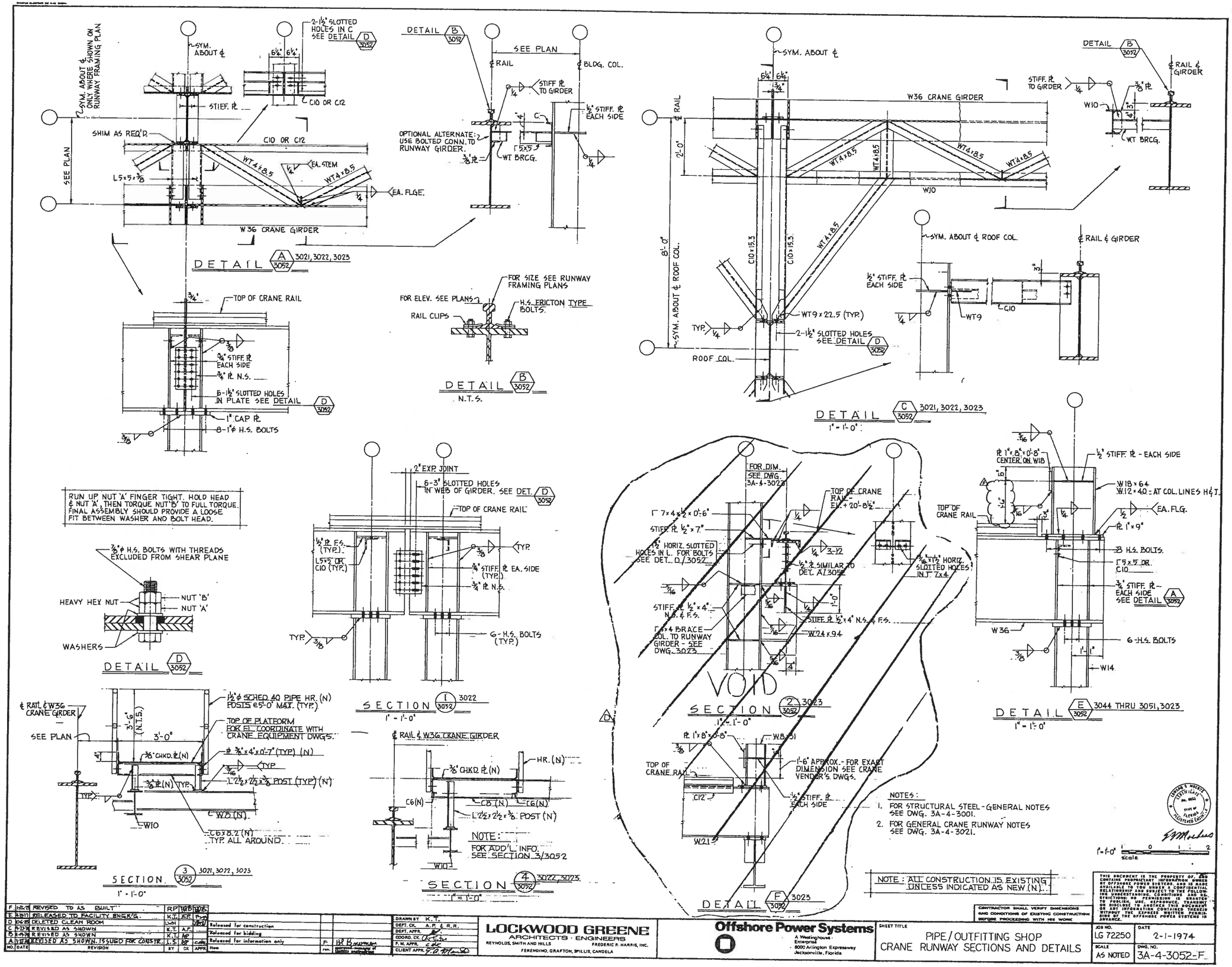
SYM. ABOUT ℄ ONLY WHERE SHOWN ON RUNWAY FRAMING PLAN
SYM. ABOUT ℄
2-1½" SLOTTED HOLES IN C SEE DETAIL D 3052
6¼" 6¼"
STIEF. PL
C10 OR C12
SHIM AS REQ'D
C10 OR C12
SEE PLAN
L5×5×⅜
WT4×8.5
EA. STEM
EA. FLGE.
W36 CRANE GIRDER
DETAIL A 3052 3021, 3022, 3023
DETAIL B 3052
SEE PLAN
℄ RAIL
BLDG. COL.
STIFF PL TO GIRDER
½" STIFF. PL EACH SIDE
OPTIONAL ALTERNATE: USE BOLTED CONN. TO RUNWAY GIRDER.
WT BRCG.
FOR SIZE SEE RUNWAY FRAMING PLANS
FOR ELEV. SEE PLANS
H.S. ERICTON TYPE BOLTS.
RAIL CLIPS
DETAIL B 3052
N.T.S.
TOP OF CRANE RAIL
¾" STIFF. PL EACH SIDE
¾" PL N.S.
8-1½" SLOTTED HOLES IN PLATE SEE DETAIL D 3052
1" CAP PL
8-1"ϕ H.S. BOLTS
SYM. ABOUT ℄
W36 CRANE GIRDER
℄ RAIL
2'-0"
8'-0"
SYM. ABOUT ℄ ROOF COL.
C10×15.3
WT4×8.5
W10
TYP.
WT9×22.5 (TYP.)
2-1½" SLOTTED HOLES SEE DETAIL D 3052
ROOF COL.
DETAIL B 3052
STIFF. PL TO GIRDER
℄ RAIL & GIRDER
¾" PL
W10
WT BRCG.
SYM. ABOUT ℄ ROOF COL.
℄ RAIL & GIRDER
½" STIFF. PL EACH SIDE
WT9
C10
DETAIL C 3052 3021, 3022, 3023
1" = 1'-0"
RUN UP NUT 'A' FINGER TIGHT. HOLD HEAD & NUT 'A', THEN TORQUE NUT 'B' TO FULL TORQUE. FINAL ASSEMBLY SHOULD PROVIDE A LOOSE FIT BETWEEN WASHER AND BOLT HEAD.
⅞"ϕ H.S. BOLTS WITH THREADS EXCLUDED FROM SHEAR PLANE
HEAVY HEX NUT
NUT 'B'
NUT 'A'
WASHERS
DETAIL D 3052
2" EXP. JOINT
6-3" SLOTTED HOLES IN WEB OF GIRDER. SEE DET. D 3052
TOP OF CRANE RAIL
½" PL F.S. (TYP.)
L5×5 OR C10 (TYP.)
TYP.
¾" STIFF. PL EA. SIDE (TYP.)
¾" PL N.S.
6-H.S. BOLTS (TYP.)
TYP.
SECTION 1 3052 3022
1" = 1'-0"
FOR DIM. SEE DWG. 3A-4-3023
TOP OF CRANE RAIL - EL. + 20'-8½"
7×4×½×0'-6"
STIFF. PL ½"×7"
½" HORIZ. SLOTTED HOLES IN L. FOR BOLTS SEE DET. D/3052
½" PL SIMILAR TO DET. A/3052
3-12
⅜"×1½" HORIZ. SLOTTED HOLES IN L. 7×4
STIFF. PL ½"×4" N.S. & F.S.
STIFF. PL ½"×4" N.S. & F.S.
5×4 BRACE COL. TO RUNWAY GIRDER - SEE DWG. 3023
W24×94
VOID
SECTION 2 3052 3023
1" = 1'-0"
PL 1"×8"×0'-8"
W8×31
TOP OF CRANE RAIL
1'-6" APPROX. - FOR EXACT DIMENSION SEE CRANE VENDOR'S DWGS.
½" STIFF. PL EACH SIDE
C12
W21
DETAIL F 3052 3023
PL 1"×8"×0'-8" CENTER ON W18
½" STIFF. PL - EACH SIDE
W18×64
W12×40 - AT COL. LINES H & J
TOP OF CRANE RAIL
EA. FLG.
PL 1"×9"
8 H.S. BOLTS.
5×5 OR C10
¾" STIFF. PL - EACH SIDE SEE DETAIL A 3052
W36
6-H.S. BOLTS
W14
DETAIL E 3052 3044 THRU 3051, 3023
1" = 1'-0"
℄ RAIL & W36 CRANE GIRDER
SEE PLAN
3'-6" (N.T.S.)
3'-0"
1½"ϕ SCHED. 40 PIPE HR. (N) FOSIS @ 5'-0" MAX. (TYP.)
TOP OF PLATFORM FOR EL. COORDINATE WITH CRANE EQUIPMENT DWGS.
⅜" CHKD. PL (N)
PL ⅜"×4'×0'-7" (TYP) (N)
TYP.
⅜" PL (N) TYP.
L2½×2½×⅜ POST (TYP) (N)
W10
W8 (N)
C6×8.2 (N) TYP. ALL AROUND.
SECTION 3 3052 3021, 3022, 3023
1" = 1'-0"
℄ RAIL & W36 CRANE GIRDER
⅜" CHKD. PL (N)
HR. (N)
C6 (N)
C6 (N)
C6 (N)
L2½×2½×⅜ POST (N)
W10
NOTE: FOR ADD'L INFO. SEE SECTION 3/3052
SECTION 4 3052 3022, 3023
1" = 1'-0"
NOTES:
1. FOR STRUCTURAL STEEL - GENERAL NOTES SEE DWG. 3A-4-3001.
2. FOR GENERAL CRANE RUNWAY NOTES SEE DWG. 3A-4-3021.
NOTE: ALL CONSTRUCTION IS EXISTING UNLESS INDICATED AS NEW (N).
CONTRACTOR SHALL VERIFY DIMENSIONS AND CONDITIONS OF EXISTING CONSTRUCTION BEFORE PROCEEDING WITH HIS WORK.
1" = 1'-0" scale
THIS DOCUMENT IS THE PROPERTY OF, AND CONTAINS PROPRIETARY INFORMATION OWNED BY OFFSHORE POWER SYSTEMS, AND IS MADE AVAILABLE IN ITS PRESENT CONFIDENTIAL RELATIONSHIP AND SUBJECT TO THE FOLLOWING UNDERSTANDING: CONDITIONS AND RESTRICTIONS: NO PERMISSION IS GRANTED TO PUBLISH, USE, REPRODUCE, TRANSMIT OR DISCLOSE TO ANOTHER THIS DOCUMENT OR ANY INFORMATION CONTAINED THEREIN WITHOUT THE EXPRESS WRITTEN PERMISSION OF THE OFFSHORE POWER SYSTEMS IN ADVANCE.
F 1-25-74 REVISED TO AS BUILT
E 8-30-71 RELEASED TO FACILITY ENGR'G.
D 10-6-65 DELETED CLEAN ROOM
C 9-17-74 REVISED AS SHOWN
B 8-19-74 REVISED AS SHOWN
A 3-27-74 REVISED AS SHOWN. ISSUED FOR CONSTR.
REVISION
Released for construction
Released for bidding
Released for information only
Issued for construction
DRAWN BY K.T.
DEPT. CK. A.P. & R.R.
DEPT. APPR.
COORD. CK.
F.M. APPR.
CLIENT APPR.
LOCKWOOD GREENE
ARCHITECTS · ENGINEERS
REYNOLDS, SMITH AND HILLS
FREDERIC R. HARRIS, INC.
FERENDINO, GRAFTON, SPILLIS, CANDELA
Offshore Power Systems
A Westinghouse Enterprise
8000 Arlington Expressway
Jacksonville, Florida
SHEET TITLE
PIPE/OUTFITTING SHOP
CRANE RUNWAY SECTIONS AND DETAILS
JOB NO. LG 72250
DATE 2-1-1974
SCALE AS NOTED
DWG. NO. 3A-4-3052-F

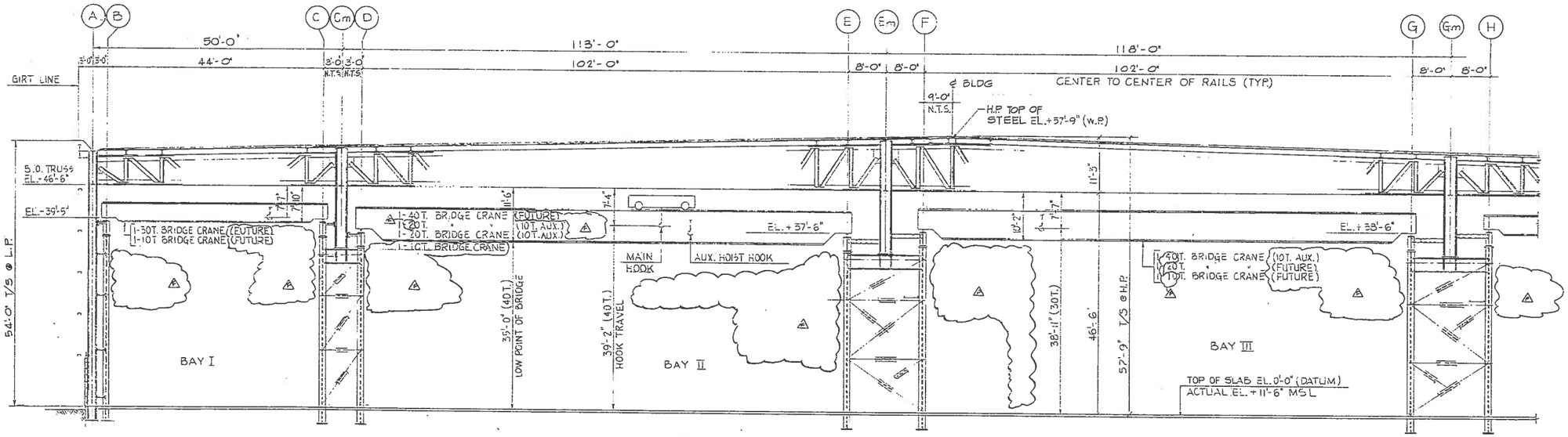

PARTIAL BUILDING SECTION (LOOKING NORTH)
SCALE: 1/8" = 1'-0"

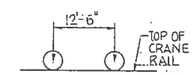

CRANE BRIDGE WHEELS

CRANE LOADS

CRANE CAPACITY	SPAN	WHEEL LOAD (EACH WHEEL)	VERT IMPACT (EACH WHEEL)	SIDE THRUST EACH RAIL *	LONGIT. FORCE EACH WHEEL	BUMPER FORCE PER RAIL
40T. + 10T. AUX.	102'-0"	88K	22	15K	11K	43K
30T. + 10T. AUX.	102'-0"	69K	16K	12K	9K	35K
30T. + 10T. AUX.	44'-0"	55K	14K	12K	7K	17K
30T. + 5T. AUX.	102'-0"	65K	15K	11K	8K	32K
20T. + 5T. AUX.	102'-0"	55K	14K	7K	7K	29K
20T.	102'-0"	52K	13K	7K	7K	27K
10T.	68'-0"	29K	5K	4K	3K	18K
10T.	44'-0"	23K	6K	4K	4K	11K

* DISTRIBUTED ½ TO EACH WHEEL

NOTES:

1. WHEEL LOADS DERIVED FROM "WHITING CRANE HANDBOOK" MAIN HOOK AND AUX. HOOK LIFTS DO NOT OCCUR AT SAME TIME.
2. CRANE LOADS ARE BASED ON THE FOLLOWING:
   a) LONGITUDINAL FORCE - 12.5% OF MAX. WHEEL LOAD (EA. WHEEL)
   b) TOTAL SIDE THRUST EACH RAIL - 12.5% OF CAPACITY + TROLLEY WT.
   c) IMPACT - 25% OF MAX. WHEEL LOAD.
   d) BUMPER FORCE PER RAIL $= WV^2/4gS$
      WHERE W = UNLOADED WT. OF CRANE
      V = 50% OF MAX. CRANE VELOCITY (V = 150 FPM).
      S = 0.17 FT. (COMPRESSION TRAVEL OF ENERGY ABSORBING DEVICE).
      g = 32.2 FT./SEC.^{2}

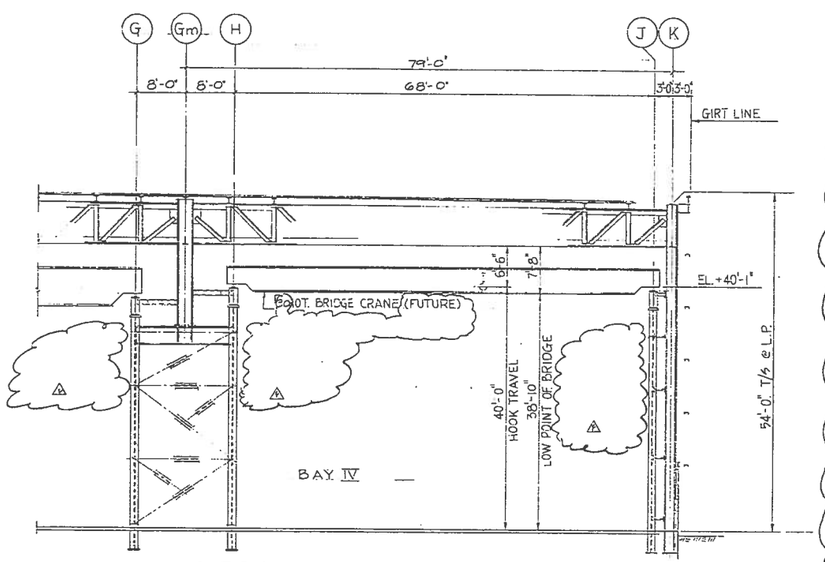

PARTIAL BUILDING SECTION (LOOKING NORTH)
SCALE: 1/8" = 1'-0"

NOTE:
THIS DWG REFLECTS CRANE LOADING & CLEARANCE CONDITIONS USED TO DESIGN THIS STRUCTURE, AND MAY NOT REFLECT THE ACTUAL NUMBER OR CAPACITY OF CRANES ACTUALLY USED.

NOTES: 1. ALL WORK IS EXISTING EXCEPT WHERE INDICATED AS NEW (N)
2. CONTRACTOR SHALL CONFIRM ACTUAL ELEVATIONS OF EXISTING WORK AND ADJUST MEETING WORK TO MATCH.

1/8" = 5 0 5 10 15 20 scale

THIS DOCUMENT IS THE PROPERTY OF, AND CONTAINS PROPRIETARY INFORMATION OWNED BY OFFSHORE POWER SYSTEMS AND IS MADE AVAILABLE TO YOU UNDER A CONFIDENTIAL RELATIONSHIP AND SUBJECT TO THE FOLLOWING UNDERSTANDING, CONDITIONS AND RESTRICTIONS: NO PERMISSION IS GRANTED TO USE, REPRODUCE, DISTRIBUTE, DISCLOSE OR DISCLOSE TO ANOTHER THIS DOCUMENT OR ANY INFORMATION CONTAINED THEREIN WITHOUT THE EXPRESS WRITTEN PERMISSION OF THE OFFSHORE POWER SYSTEMS IN ADVANCE.

NO.	DATE	REVISION	BY	CK	APPR
F	1-20-77	REVISED TO AS BUILT	RP	NB	NB
E	6-7-77	REVISED TO FACILITY DATA		AP	
D	12-1-6	UPDATED DRAWING	RJB		
C	10-25-5	DELETED CLEAN ROOM	LWN		
B	7-17-74	REVISED AS SHOWN	K.T.		
A	5-17-74	AS SHOWN - ISSUED FOR CONSTR.	ET	AP	

Released for construction	
Released for bidding	
Released for information only	
Item	APPROVED - Manager of Facilities Engineering

DRAWN BY K.T.
DEPT. CK. A.P. E.R.R.
DEPT. APPR.
COORD. CK.
P. M. APPR.
CLIENT APPR.

LOCKWOOD GREENE
ARCHITECTS · ENGINEERS
REYNOLDS, SMITH AND HILLS — FREDERIC R. HARRIS, INC.
FERENDINO, GRAFTON, SPILLIS, CANDELA

Offshore Power Systems
A Westinghouse Enterprise
8000 Arlington Expressway
Jacksonville, Florida

SHEET TITLE: PIPE / OUTFITTING SHOP TRANSVERSE BUILDING SECTION CRANE DESIGN LOADS & CLEARANCES

JOB NO. LG-72250
DATE 2-1-1974
SCALE 1/8" = 1'-0"
DWG. NO. 3A-4-3055-F

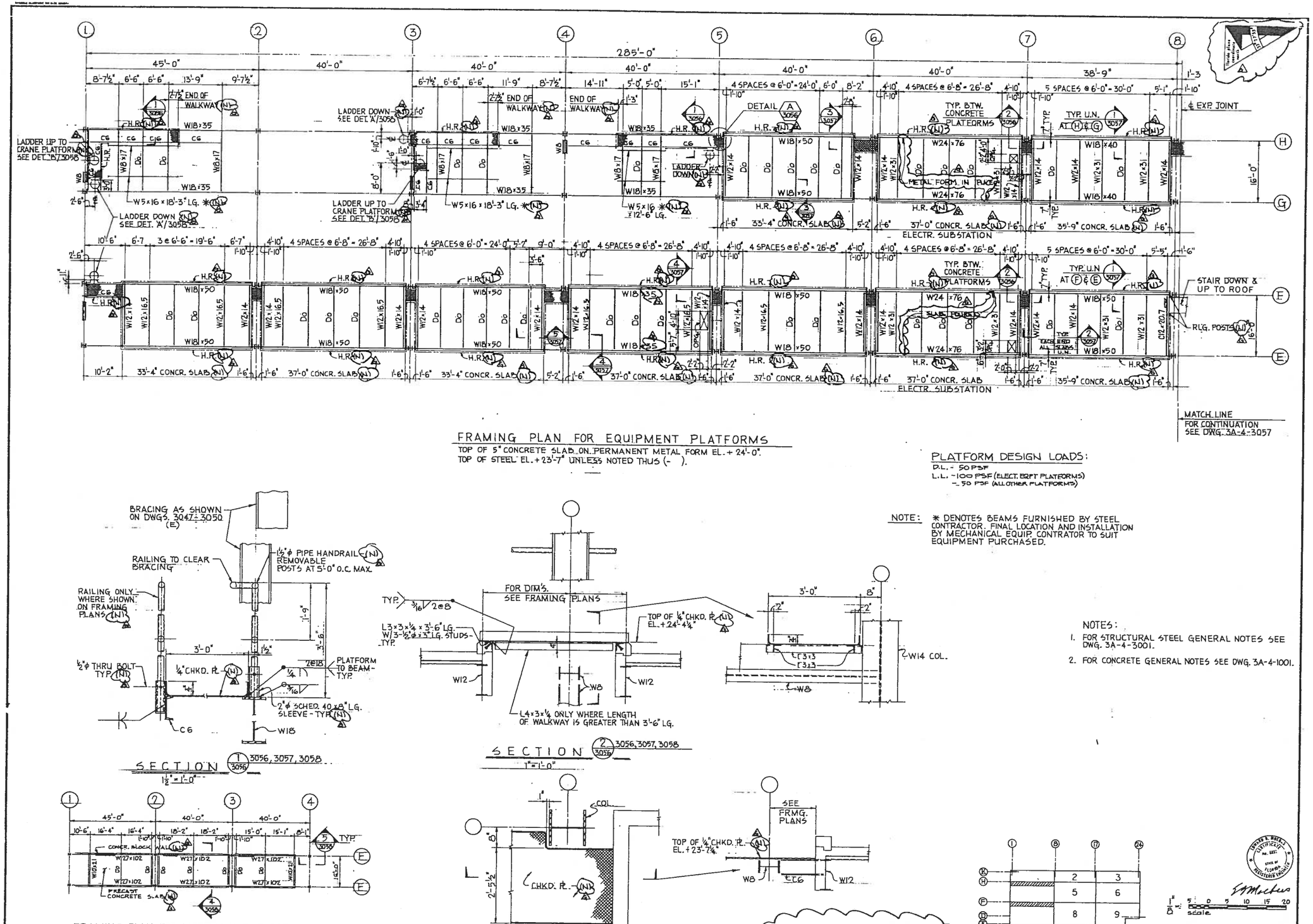

FRAMING PLAN FOR EQUIPMENT PLATFORMS

TOP OF 5" CONCRETE SLAB ON PERMANENT METAL FORM EL. + 24'-0".
TOP OF STEEL EL. + 23'-7" UNLESS NOTED THUS (-).

PLATFORM DESIGN LOADS:
D.L. - 50 PSF
L.L. - 100 PSF (ELECT. EQPT PLATFORMS)
- 50 PSF (ALL OTHER PLATFORMS)

NOTE: * DENOTES BEAMS FURNISHED BY STEEL CONTRACTOR. FINAL LOCATION AND INSTALLATION BY MECHANICAL EQUIP. CONTRATOR TO SUIT EQUIPMENT PURCHASED.

SECTION 1/3056 3056, 3057, 3058
1½" = 1'-0"

SECTION 2/3056 3056, 3057, 3058
1" = 1'-0"

FRAMING PLAN FOR MEZZANINE FLOOR
1/16" = 1'-0"
TOP OF SLAB EL. + 12'-1½".
TOP OF STEEL EL. (- 9½").

DETAIL A 3056, 3057, 3058
1" = 1'-0"

NOTES:
1. FOR STRUCTURAL STEEL GENERAL NOTES SEE DWG. 3A-4-3001.
2. FOR CONCRETE GENERAL NOTES SEE DWG. 3A-4-1001.

NOTE: 1. ALL CONSTRUCTION IS EXISTING UNLESS INDICATED AS NEW (N).
2. CONTRACTOR SHALL CONFIRM ACTUAL ELEVATIONS OF EXISTING WORK AND ADJUST MEETING WORK TO MATCH.

KEY PLAN

1" = 5' 0 5 10 15 20 scale

NO.	DATE	REVISION	BY	CK	APPR
G	1-25-74	REVISED TO AS BUILT	RFP	RLB	WCB
F	4-25-71	RELEASED TO FACILITY ENGR'G	CC	AD	FWD

Released for construction
Released for bidding
Released for information only

DRAWN BY K.T.
DEPT. CK.
DEPT. APPR.
COORD. CK.
F. M. APPR.
CLIENT APPR.

LOCKWOOD GREENE
ARCHITECTS · ENGINEERS
REYNOLDS, SMITH AND HILLS · FREDERIC R. HARRIS, INC.
FERENDINO, GRAFTON, SPILLIS, CANDELA

Offshore Power Systems
A Westinghouse Enterprise
8000 Arlington Expressway
Jacksonville, Florida

SHEET TITLE: PIPE/OUTFITTING SHOP EQUIPMENT PLATFORMS – SHT. 1 FRAMING PLANS AND DETAILS

JOB NO. LG 72250 | DATE 3-22-74
SCALE 1" = 1'-0" | DWG. NO. 3A-4-3056-G

THIS DOCUMENT IS THE PROPERTY OF, AND CONTAINS PROPRIETARY INFORMATION OWNED BY OFFSHORE POWER SYSTEMS, AND IS MADE AVAILABLE TO YOU UNDER A CONFIDENTIAL RELATIONSHIP AND SUBJECT TO THE FOLLOWING UNDERSTANDINGS AND RESTRICTIONS: ACCESS RESTRICTED. NO PERMISSION IS GRANTED TO PUBLISH, USE, REPRODUCE, TRANSMIT OR DISCLOSE TO ANOTHER THIS DOCUMENT OR ANY INFORMATION CONTAINED THEREIN WITHOUT THE EXPRESS WRITTEN PERMISSION OF THE OFFSHORE POWER SYSTEMS IN ADVANCE.

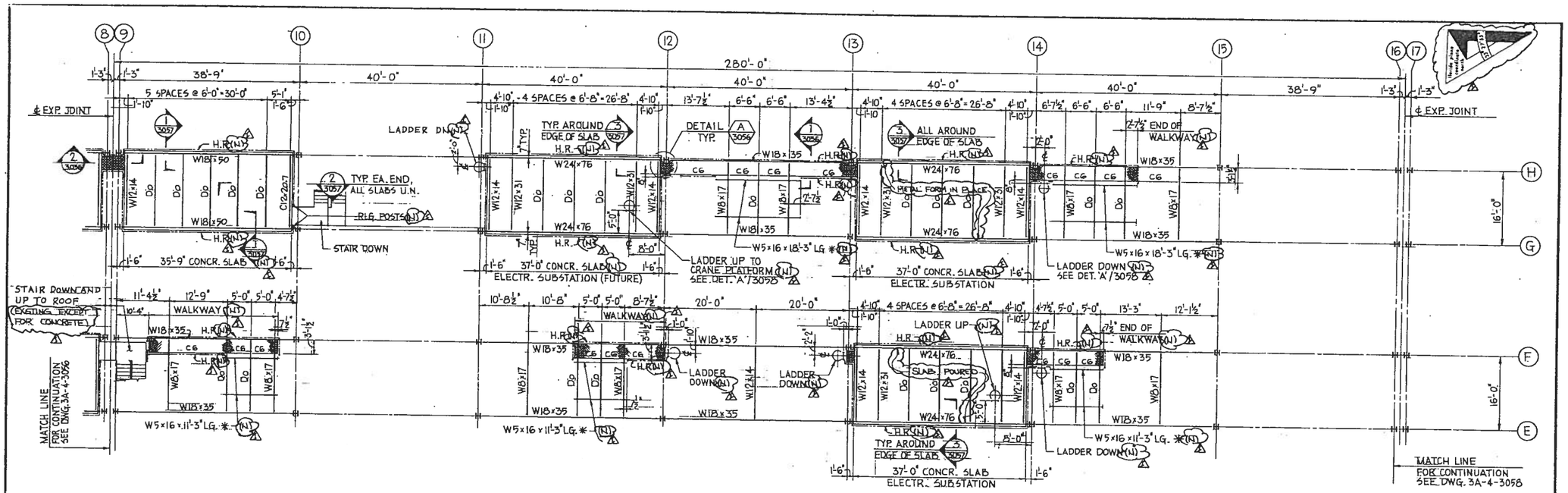

FRAMING PLAN FOR EQUIPMENT PLATFORMS

TOP OF 5" CONCR. SLAB ON PERMANENT METAL FORM EL. + 24'-0".
TOP OF STEEL EL. + 23'-7" UNLESS NOTED THUS (-).
CG DENOTES CG x B.2.

NOTES:

1. * DENOTES BEAMS FURNISHED BY STEEL CONTRACTOR. FINAL LOCATION AND INSTALLATION BY MECHANICAL EQUIP. CONTRACTOR TO SUIT EQUIPMENT PURCHASED.

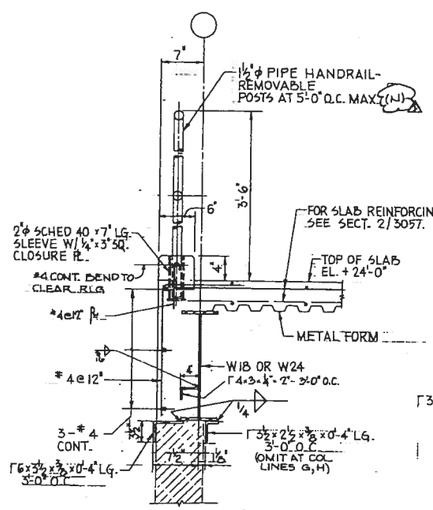

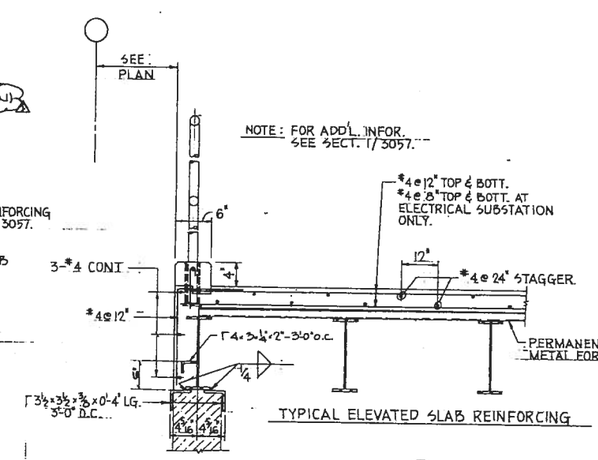

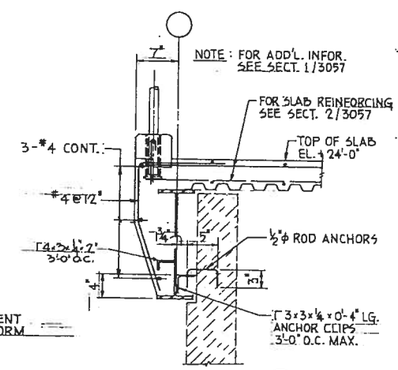

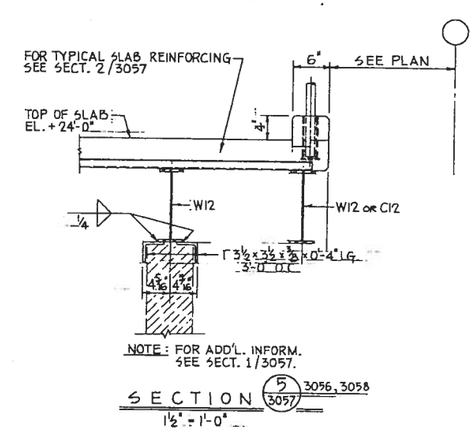

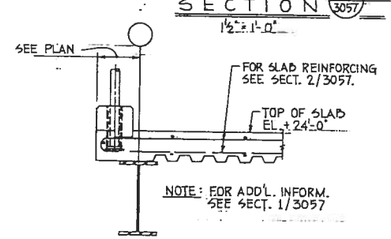

NOTE: 1. ALL CONSTRUCTION IS EXISTING UNLESS INDICATED AS NEW (N).
2. CONTRACTOR SHALL CONFIRM ELEVATIONS OF EXISTING WORK AND ADJUST MEETING WORK TO MATCH.

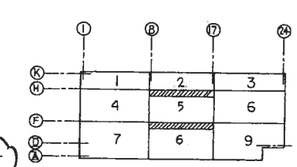

NO	DATE	REVISION	BY	CK	APPR	Item
I	1-24-74	REVISED TO AS-BUILT	KP			Released for construction
H	12-19-73	RELEASED TO FACILITY ENGRG.	K.T.	A.P.		Released for bidding
G	10-5-73	ADDED NOTE 2	LWH		LWH	Released for information only
F	7-17-73	REVISED AS SHOWN	K.T.	A.P.		

DRAWN BY K.T.
DEPT. CK. G.C. Bazzell
DEPT. APPR. [illegible]
COORD. CK. [illegible]
P.M. APPR. CHK
CLIENT APPR. [illegible]

LOCKWOOD GREENE
ARCHITECTS · ENGINEERS
REYNOLDS, SMITH AND HILLS · FREDERIC R. HARRIS, INC.
FERENDINO, GRAFTON, SPILLIS, CANDELA

Offshore Power Systems
A Westinghouse Enterprise
8000 Arlington Expressway
Jacksonville, Florida

SHEET TITLE: PIPE/OUTFITTING SHOP EQUIPMENT PLATFORMS - SHT. 2 FRAMING PLANS AND DETAILS

JOB NO. LG 72250 | DATE 3-22-74
SCALE 1" = 1'-0" | DWG. NO. 3A-4-3057-I

THIS DOCUMENT IS THE PROPERTY OF, AND CONTAINS PROPRIETARY INFORMATION OWNED BY OFFSHORE POWER SYSTEMS, AND IS MADE AVAILABLE TO YOU UNDER A CONFIDENTIAL RELATIONSHIP AND SUBJECT TO THE FOLLOWING UNDERSTANDING, CONDITIONS AND RESTRICTIONS: NO PERMISSION IS GRANTED TO PUBLISH, USE, REPRODUCE, TRANSMIT OR DISCLOSE THIS DOCUMENT OR ANY PART OR ANY INFORMATION CONTAINED THEREIN WITHOUT THE EXPRESS WRITTEN PERMISSION OF THE OFFSHORE POWER SYSTEMS IN ADVANCE.

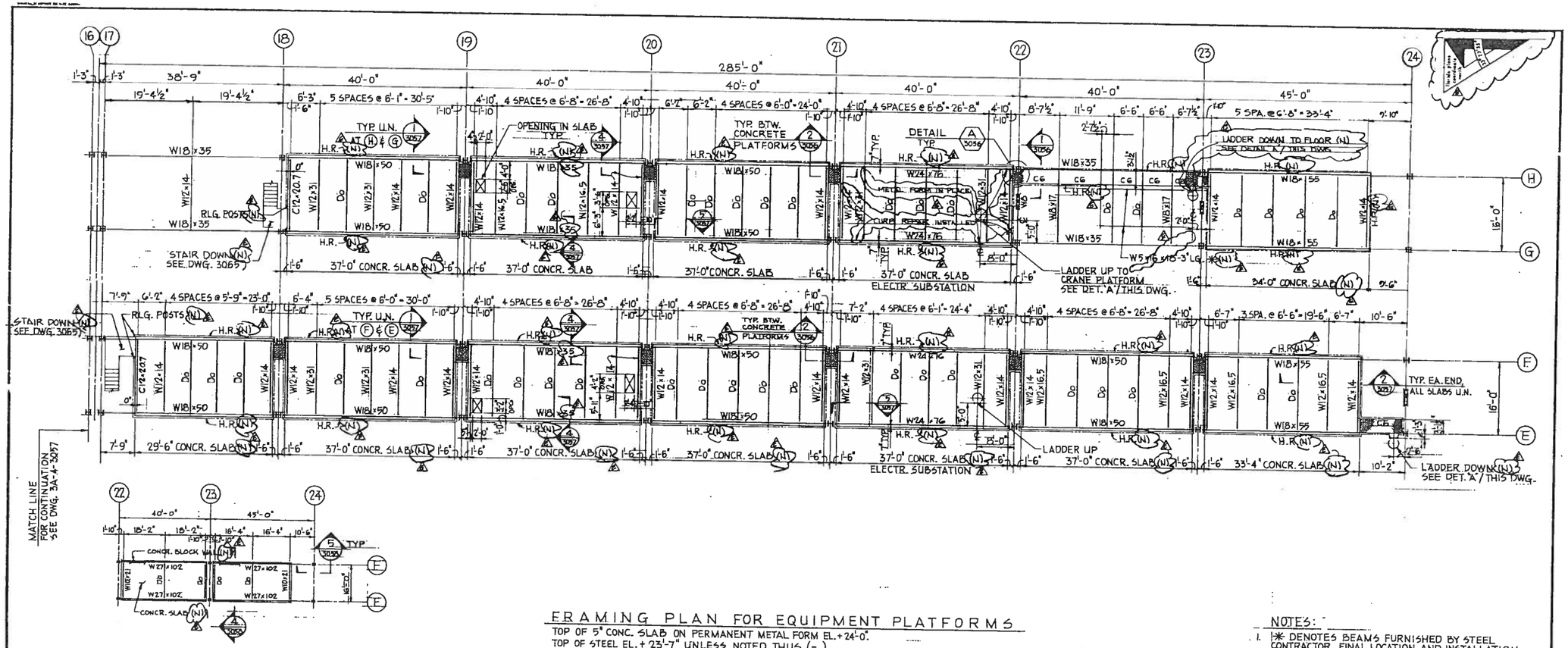

FRAMING PLAN FOR EQUIPMENT PLATFORMS

TOP OF 5" CONC. SLAB ON PERMANENT METAL FORM EL. + 24'-0".
TOP OF STEEL EL. + 23'-7" UNLESS NOTED THUS (-).
CG DENOTES CG × 8.2

FRAMING PLAN FOR MEZZANINE FLOOR

1/16" = 1'-0"
TOP OF SLAB EL. + 12'-1½"
TOP OF STEEL EL. (- 9½")

NOTES:

1. ✱ DENOTES BEAMS FURNISHED BY STEEL CONTRACTOR. FINAL LOCATION AND INSTALLATION BY MECHANICAL EQUIPMENT CONTRACTOR TO SUIT EQUIPMENT PURCHASED.

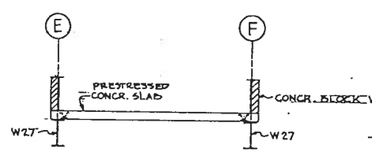

SECTION 4 / 3056, 3058

1/4" = 1'-0"

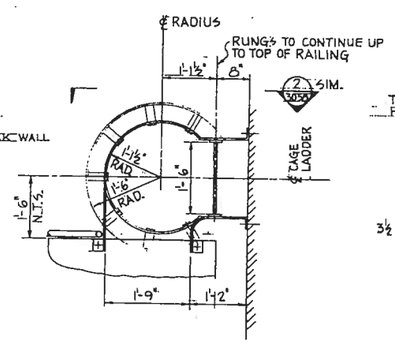

DETAIL B / 3056, 3057, 3058

1" = 1'-0"

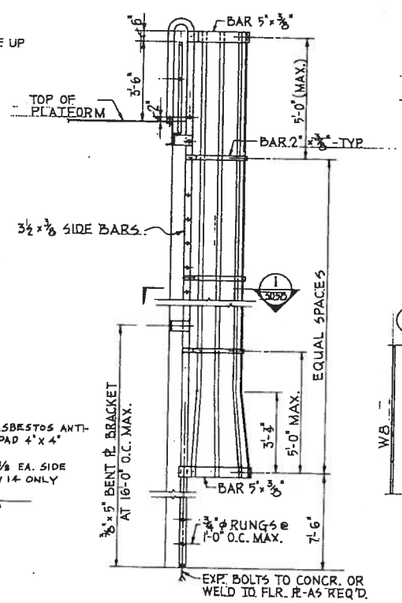

ELEVATION 2 / 3058

1/2" = 1'-0"

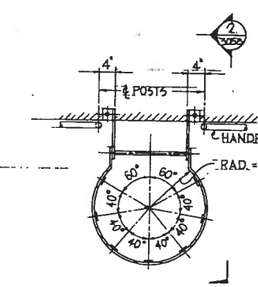

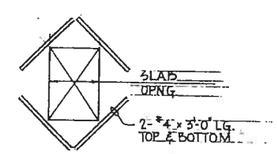

ADD'L. REINFORCING AT SLAB OPENINGS

DETAIL A / 3056, 3057, 3058

1" = 1'-0"

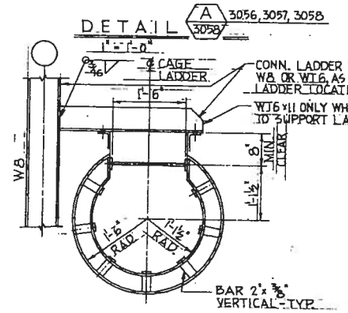

SECTION 1 / 3058

1" = 1'-0"

NOTE: 1. ALL WORK EXISTING EXCEPT WHERE INDICATED AS NEW (N).

2. CONTRACTOR SHALL CONFIRM ACTUAL ELEVATIONS OF EXISTING WORK AND ADJUST MEETING WORK TO MATCH.

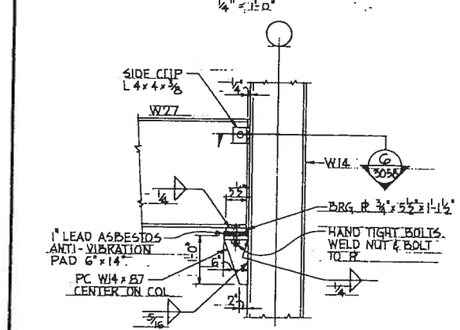

SECTION 5 / 3056, 3058

1" = 1'-0"

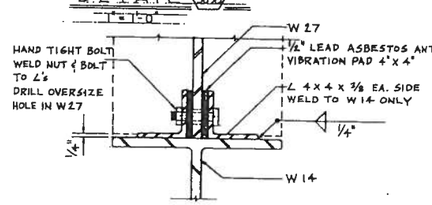

SECTION 6 / 3058

3" = 1'-0"

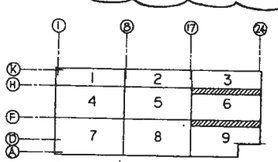

KEY PLAN

1" = 5 : 0 5 10 15 20
scale

THIS DOCUMENT IS THE PROPERTY OF, AND CONTAINS PROPRIETARY INFORMATION OWNED BY OFFSHORE POWER SYSTEMS, AND IS MADE AVAILABLE TO YOU UNDER A CONFIDENTIAL RELATIONSHIP AND SUBJECT TO THE FOLLOWING UNDERSTANDING, CONDITIONS AND RESTRICTIONS: NO PERMISSION IS GRANTED TO PUBLISH, USE, REPRODUCE, TRANSMIT OR DISCLOSE THIS DOCUMENT OR ANY INFORMATION CONTAINED THEREIN WITHOUT THE EXPRESS WRITTEN PERMISSION OF THE OFFSHORE POWER SYSTEMS IN ADVANCE.

NO.	DATE	REVISION	BY	CK	APPR
H	2-26-74	REVISE TO AS BUILT	KCP	[illegible]	[illegible]
G	12-13-71	RELEASED TO FACILITY ENGR'G.	KT	AF	[illegible]
F	12-8-4	REVISED DWG. ADDED SECTION EC	KJB		[illegible]

Released for construction
Released for bidding
Released for information only

Item	Rev.
E	

DRAWN BY K.T.
DEPT. CK. [illegible]
DEPT. APPR. [illegible]
COORD. CK. [illegible]
P. M. APPR. [illegible]
CLIENT APPR. [illegible]

LOCKWOOD GREENE
ARCHITECTS · ENGINEERS
REYNOLDS, SMITH AND HILLS
FREDERIC R. HARRIS, INC.
FERENDINO, GRAFTON, SPILLIS, CANDELA

Offshore Power Systems
A Westinghouse Enterprise
8000 Arlington Expressway
Jacksonville, Florida

SHEET TITLE: PIPE / OUTFITTING SHOP EQUIPMENT PLATFORMS - SHT. 3 FRAMING PLANS AND DETAILS

JOB NO. LG 72250
DATE 3-22-74
SCALE 1" = 1'-0" U.N.
DWG. NO. 3A-4-3058 E H

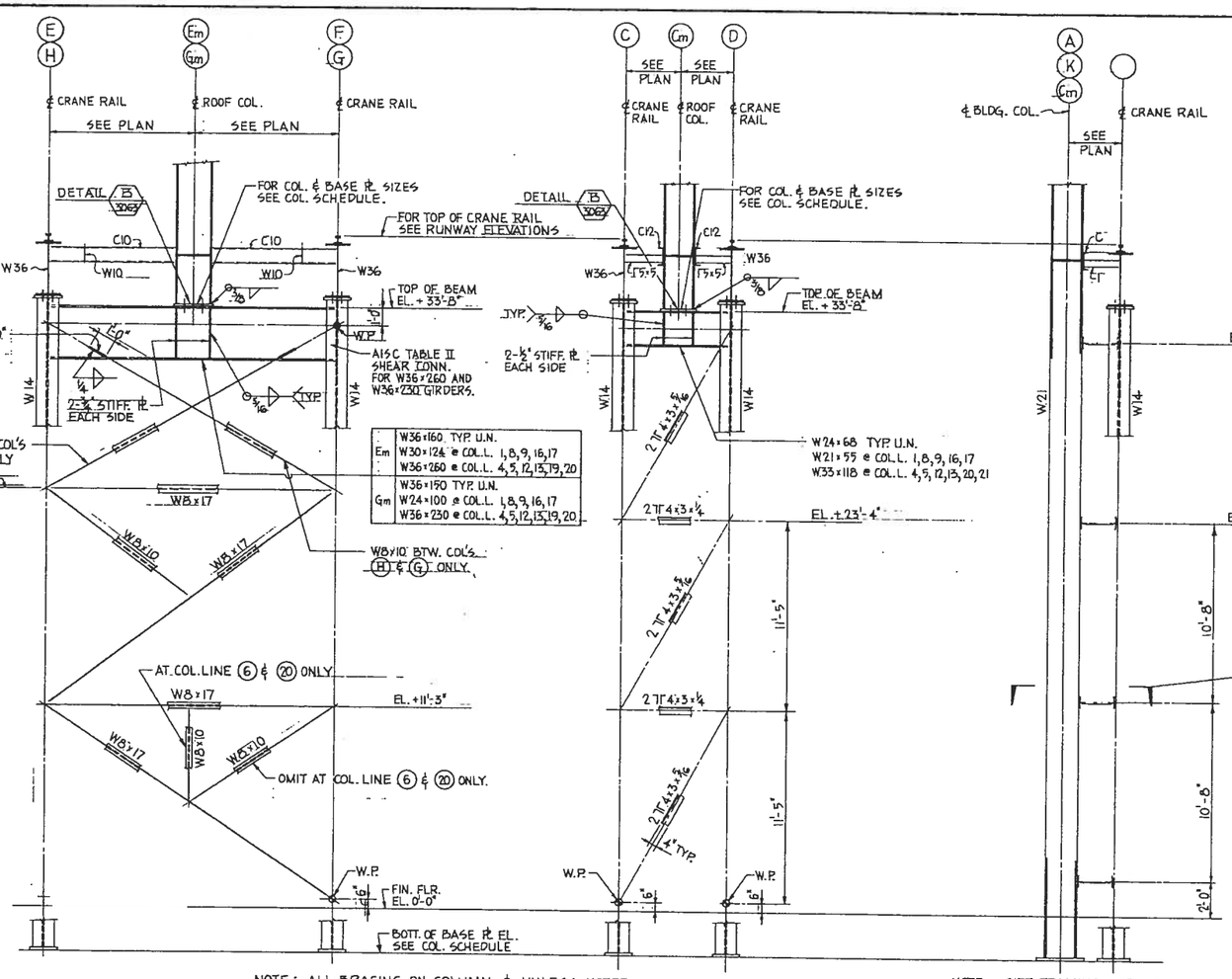

NOTE: ALL BRACING ON COLUMN ℄ UNLESS NOTED.

SECTION 1 / 3063 — 3021, 3022, 3023
3/8" = 1'-0"
TYPICAL BRACING AT CRANE COL'S. E & F, G & H.

NOTE: GIRT FRAMING NOT SHOWN FOR CLARITY.

SECTION 2 / 3063 — 3021, 3022, 3023
3/8" = 1'-0"
TYPICAL BRACING AT CRANE COL'S. C & D.

SECTION 3 / 3063 — 3021, 3022, 3023
3/8" = 1'-0"

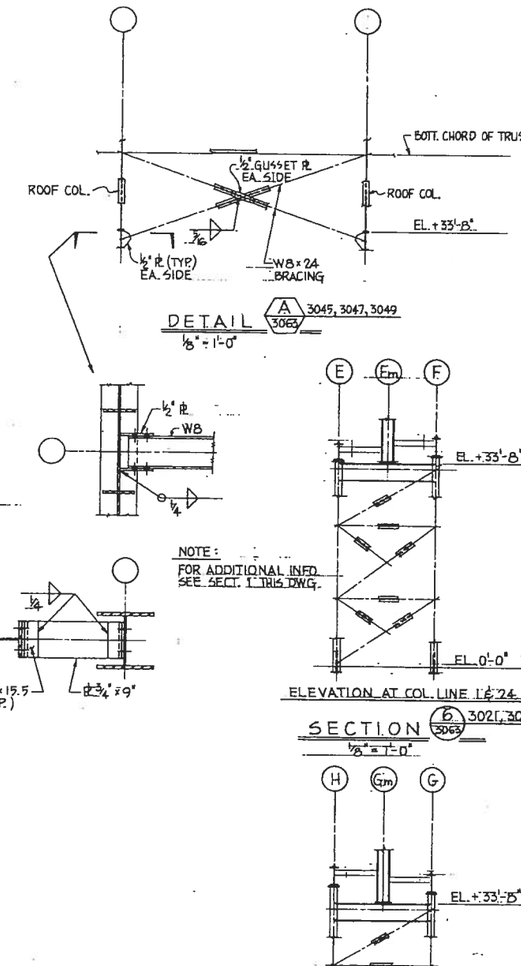

NOTE: FOR ADDITIONAL INFO. SEE SECT. 1 THIS DWG.

NOTE: FOR ADDITIONAL INFO. SEE SECT. 1 THIS DWG.

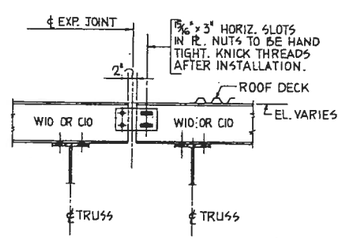

SECTION 4 / 3063 — 3002, 3005, 3008
1" = 1'-0"

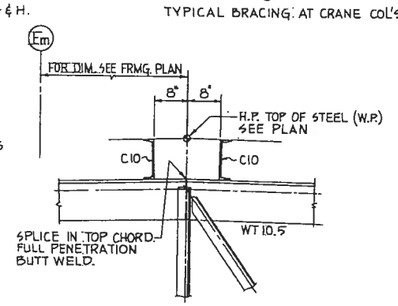

SECTION 5 / 3063 — 3004, 3005, 3006
1" = 1'-0"

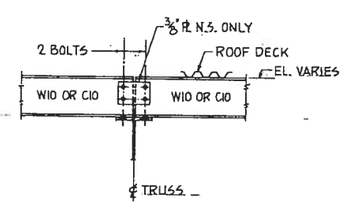

TYP. PURLIN TO TRUSS CHORD CONNECTION.
DWGS. 3001 THRU 3009

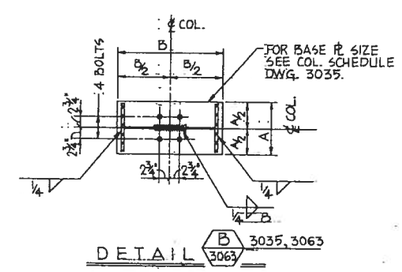

DETAIL B 3063 — 3035, 3063

NOTE:
1. ALL CONSTRUCTION EXISTING EXCEPT WHERE INDICATED AS NEW (N)
2. CONTRACTOR SHALL CONFIRM ACTUAL ELEVATIONS OF EXISTING WORK AND ADJUST MEETING WORK TO MATCH.

3/8" = 1'-0" scale

1" = 1'-0" scale

THIS DOCUMENT IS THE PROPERTY OF AND CONTAINS PROPRIETARY INFORMATION OWNED BY OFFSHORE POWER SYSTEMS AND IS MADE AVAILABLE TO YOU UNDER A CONFIDENTIAL RELATIONSHIP AND SUBJECT TO THE FOLLOWING UNDERSTANDING, CONDITIONS AND RESTRICTIONS: NO PERMISSION IS GRANTED TO PUBLISH, USE, REPRODUCE, TRANSMIT OR TRANSFER TO ANY ATTACH THIS DOCUMENT OR ANY INFORMATION CONTAINED THEREIN WITHOUT PRIOR WRITTEN CONSENT OF THE DESIGN OF THE OFFSHORE POWER SYSTEMS IS AVAILABLE.

NO.	DATE	REVISION	BY	CK	APPR
D	1-30-74	REVISED TO AS BUILT	R.R.		
C	12-21-73	RELEASED TO FACILITY ENGRS.			
B	11-9-73	REVISED AS SHOWN	K.T.		
A	9-27-73	AS SHOWN. ISSUED FOR CONSTR.	CT		

Released for construction		
Released for bidding		
Released for information only	D	
Item	rev.	

DRAWN BY K. TIEDEMANN
DEPT. CK. A.P. & R.R.
DEPT. APPR.
COORD. CK.
P.M. APPR. CEK
CLIENT APPR.

LOCKWOOD GREENE
ARCHITECTS · ENGINEERS
REYNOLDS, SMITH AND HILLS — FREDERIC R. HARRIS, INC.
FERENDINO, GRAFTON, SPILLIS, CANDELA

Offshore Power Systems
A Westinghouse Enterprise
8000 Arlington Expressway
Jacksonville, Florida

SHEET TITLE: PIPE/OUTFITTING SHOP SECTIONS AND DETAILS

JOB NO.	DATE
LG 72250	2-1-1974
SCALE	DWG. NO.
AS NOTED	3A-4-3063-D

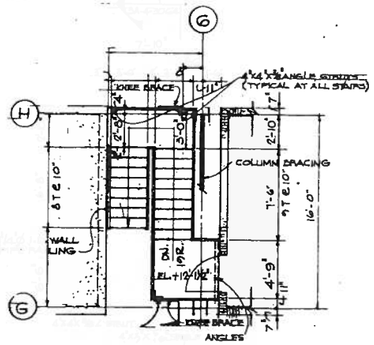

AN ZZANINE LEVEL STAIR Nº1

NOTE

DIMENSIONS AND NOTES SHOWN FOR STAIR Nº1 ARE TYPICAL FOR ALL STAIRS UNLESS OTHERWISE NOTED

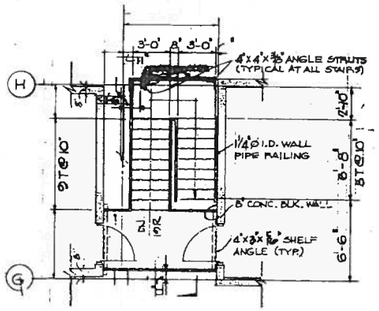

LEVEL
(FUTURE)

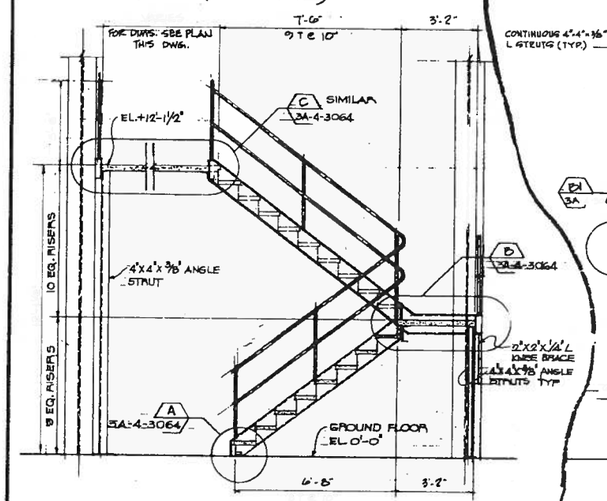

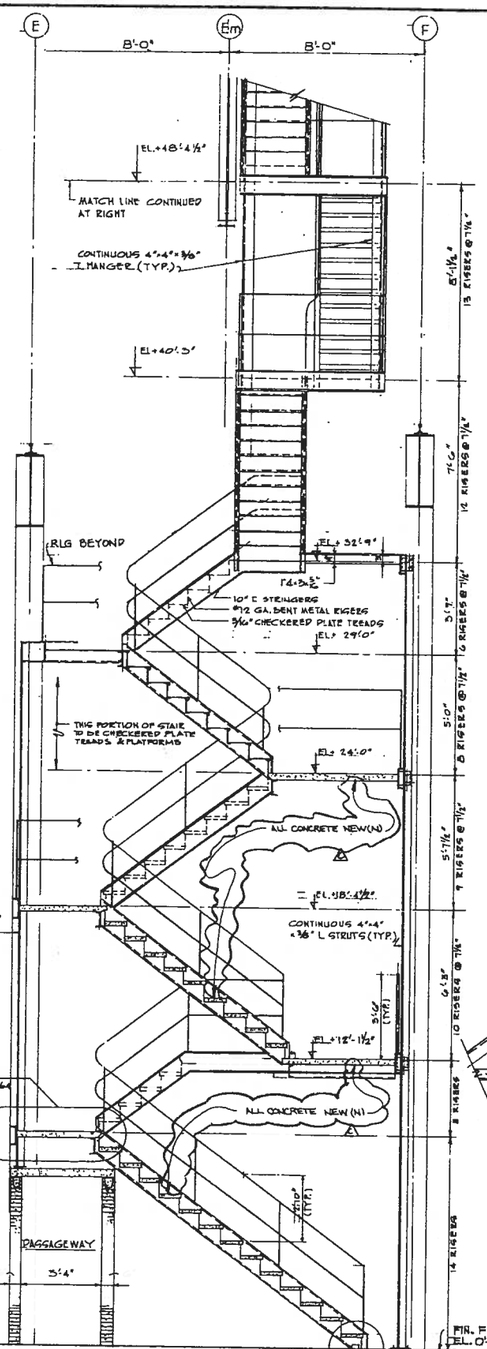

SECTION 2
SCALE 1/2"=1'-0" 3A-4-3065

NOTES: ALL CONSTRUCTION IS EXISTING UNLESS INDICATED AS NEW (N) OR FUTURE

CONTRACT TO CONFIRM ACTUAL ELEVATIONS OF EXISTING WORK AND ADJUST MEETING WORK TO MATCH

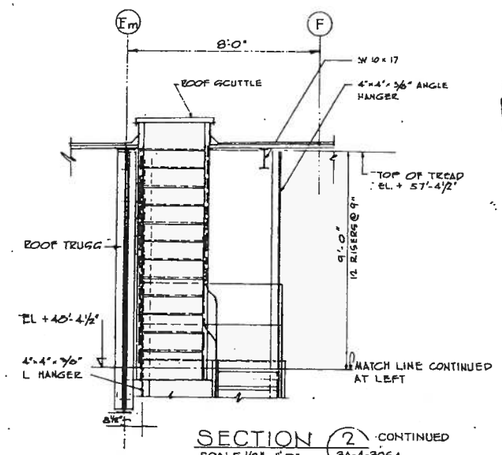

SECTION 2 CONTINUED
SCALE 1/2"=1'-0" 3A-4-3064

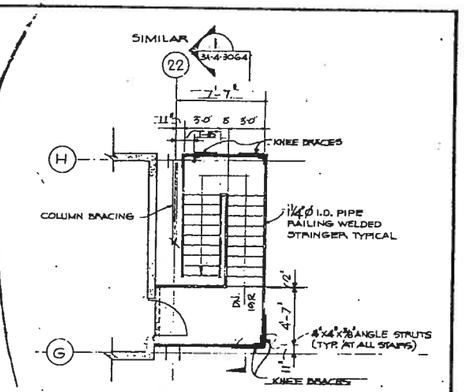

PLAN @ MEZZANINE LEVEL
STAIR Nº5 (FUTURE)

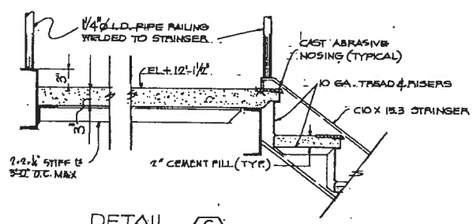

DETAIL C
SCALE 1½"=1'-0" 3A-4-3064

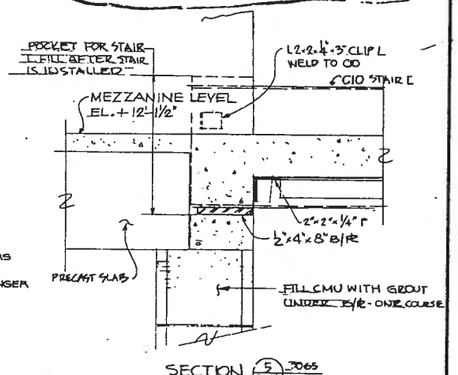

SECTION 5 3064 3065

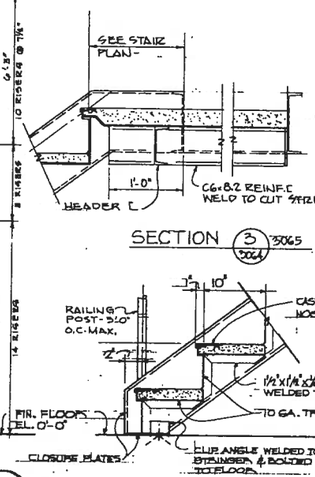

SECTION 3 3065

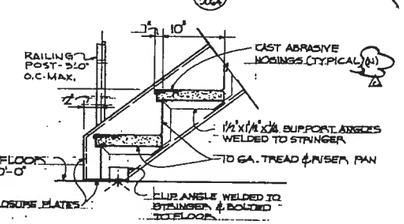

DETAIL A
SCALE 1½"=1'-0" 3A-4-3064

DETAIL A1
SIM. BUT OPPOSITE HAND 3A-4-3064

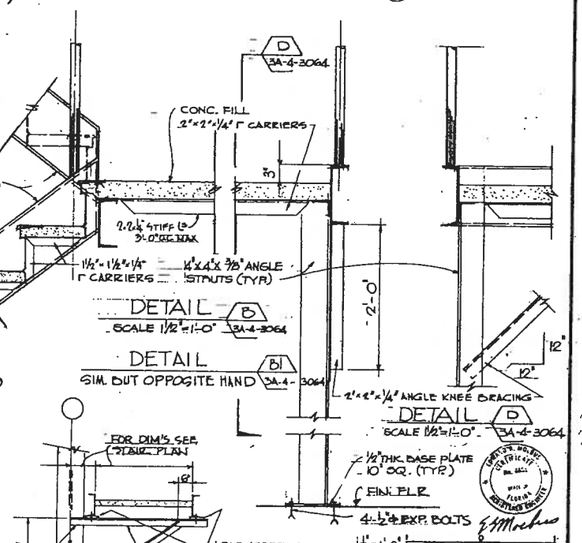

DETAIL B
SCALE 1½"=1'-0" 3A-4-3064

DETAIL B1
SIM. BUT OPPOSITE HAND 3A-4-3064

DETAIL D
SCALE 1½"=1'-0" 3A-4-3064

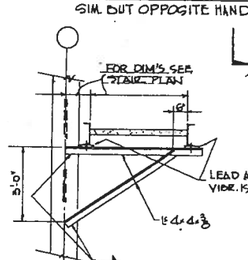

SECTION 4 3065 3064

NO.	DATE	REVISION	BY	CK	APPR
A	3-15-72	REVISED TO AS BUILT	R.P.	WDB	WDB
B	3-25-72	RELEASED TO FACILITY ENGR'G.	R.P.	J.F.	FAB

Released for construction		
Released for bidding		
Released for information only	C	W.P. Bergman
Hold	rev.	

DRAWN BY A.S.
DEPT. CK.
DEPT. APPR.
COORD. CK. B.C.S.
P. M. APPR. C.W.
CLIENT APPR. 7/17/74

LOCKWOOD GREENE
ARCHITECTS · ENGINEERS
REYNOLDS, SMITH AND HILLS — FREDERIC R. HARRIS, INC.
FERENDINO, GRAFTON, SPILLIS, CANDELA

Offshore Power Systems
A Westinghouse Enterprise
8000 Arlington Expressway
Jacksonville, Florida

SHEET TITLE
PIPE/OUTFITTING SHOP
STAIR PLANS SECTIONS & DETAILS

JOB NO. LG.72250
DATE JULY 15, 1974
SCALE AS SHOWN
DWG. NO. 3A-4-3064-C

THIS DOCUMENT IS THE PROPERTY OF, AND CONTAINS PROPRIETARY INFORMATION OWNED BY OFFSHORE POWER SYSTEMS, AND IS BEING LOANED TO YOU IN CONFIDENCE AND TRUST FOR MUTUAL ADVANTAGE. THE PROPERTIES AND INFORMATION HEREIN ARE SUBJECT TO THE UNDERSTANDING, CONDITIONS AND RESTRICTIONS: NO PERMISSION IS GRANTED TO PUBLISH, USE, REPRODUCE, TRANSMIT OR DISCLOSE TO ANOTHER THIS DOCUMENT OR ANY INFORMATION CONTAINED THEREIN WITHOUT THE EXPRESS WRITTEN PERMISSION OF THE OFFSHORE POWER SYSTEMS IN ADVANCE.

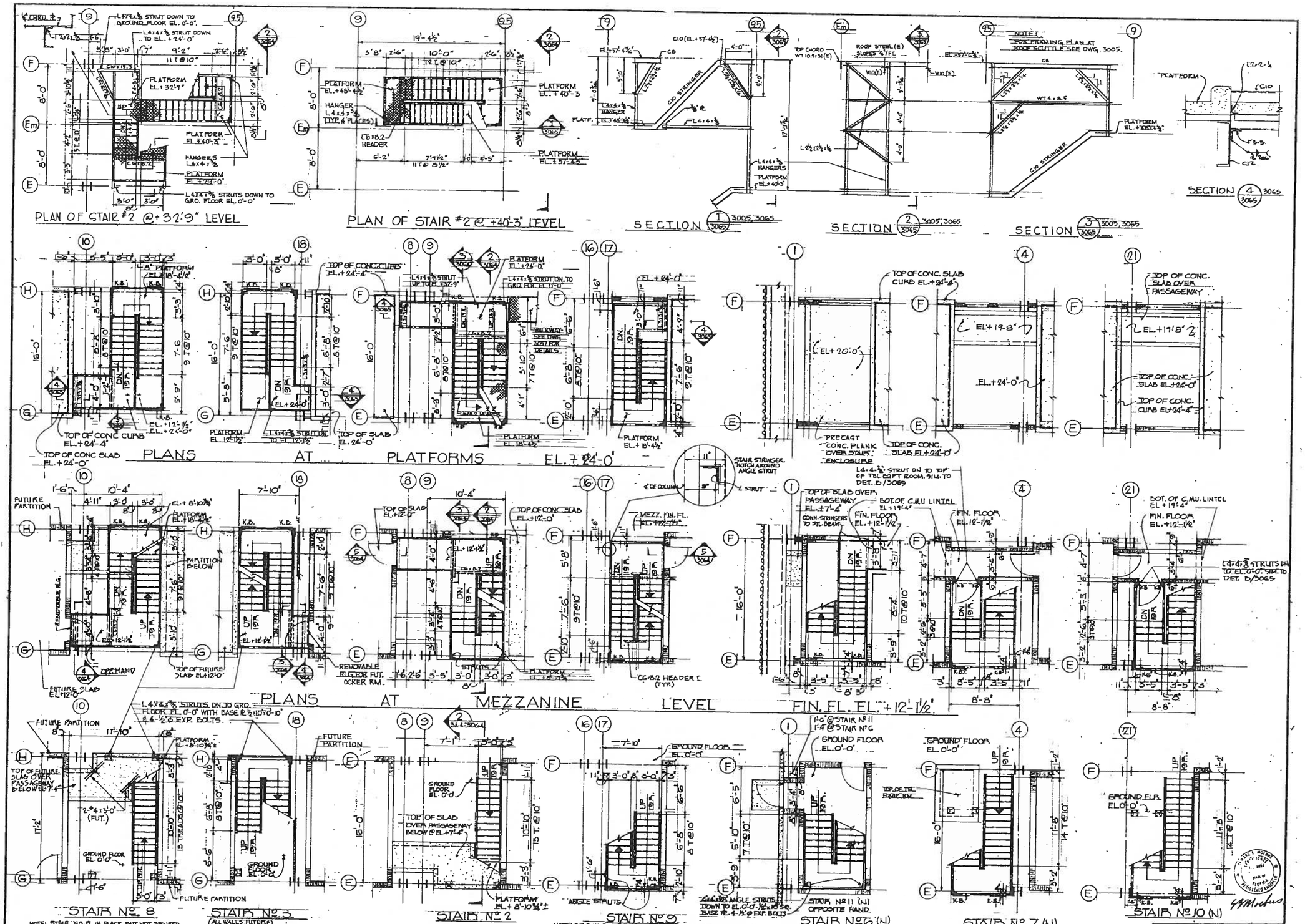

NOTE: STAIR NO. 8 IN PLACE BUT NOT SECURED. ALL OTHER WORK NEW (N).

NOTE: STAIR NO. 5 IN PLACE BUT NOT SECURED. ALL OTHER WORK (N).

NOTES: STAIR NO. 2, COMPLETE EXCEPT FOR CONCRETE WORK AND CORRECTIONS TO PENDING MASONRY WORK.

NOTE: STAIR NO. 9 IN PLACE BUT NOT SECURED. ALL OTHER WORK NEW (N).

NOTE: ALL CONSTRUCTION IS EXISTING UNLESS INDICATED AS NEW (N) OR FUTURE.

CONTRACTOR SHALL CONFIRM ACTUAL ELEVATIONS, DIMENSIONS, WORK AND ADJUST MEETING WORK TO MATCH.

ABBREVIATION:
K.B. - KNEE BRACE

NO.	DATE	REVISION	BY	CK	APPR
B	8-19-71	REVISED TO AS BUILT	R.F.		
A	5-8-74	RELEASED TO FACILITY ENGR'G	K.L.R.		

	Released for construction	
	Released for bidding	
	Released for information only	
B	Issue	

DRAWN BY R.F.
DEPT. CK.
DEPT. APPR.
COORD. CK. B.C.S.
F. M. APPR.
CLIENT APPR.

LOCKWOOD GREENE
ARCHITECTS · ENGINEERS
REYNOLDS, SMITH AND HILLS — FREDERIC R. HARRIS, INC.
FERENDINO, GRAFTON, SPILLIS, CANDELA

Offshore Power Systems
A Westinghouse Enterprise
8000 Arlington Expressway
Jacksonville, Florida

SHEET TITLE: PIPE/OUTFITTING SHOP
STAIR PLANS SECTIONS & DETAILS

JOB NO. L.G. 72250
DATE JULY 15, 1974
SCALE 1/8" = 1'-0"
DWG. NO. 3A-4-3065-B

THIS DOCUMENT IS THE PROPERTY OF, AND CONTAINS PROPRIETARY INFORMATION OWNED BY OFFSHORE POWER SYSTEMS, AND IS MADE AVAILABLE TO THE USER & CONFIDENTIAL RELATIONSHIP AND SUBJECT TO THE FOLLOWING UNDERSTANDING, CONDITIONS AND RESTRICTIONS: NO PERMISSION IS GRANTED TO USE, REPRODUCE OR DISCLOSE THIS DOCUMENT OR ANY INFORMATION CONTAINED THEREIN WITHOUT THE EXPRESS WRITTEN TERMINATION OF THE OFFSHORE POWER SYSTEMS IN ADVANCE.

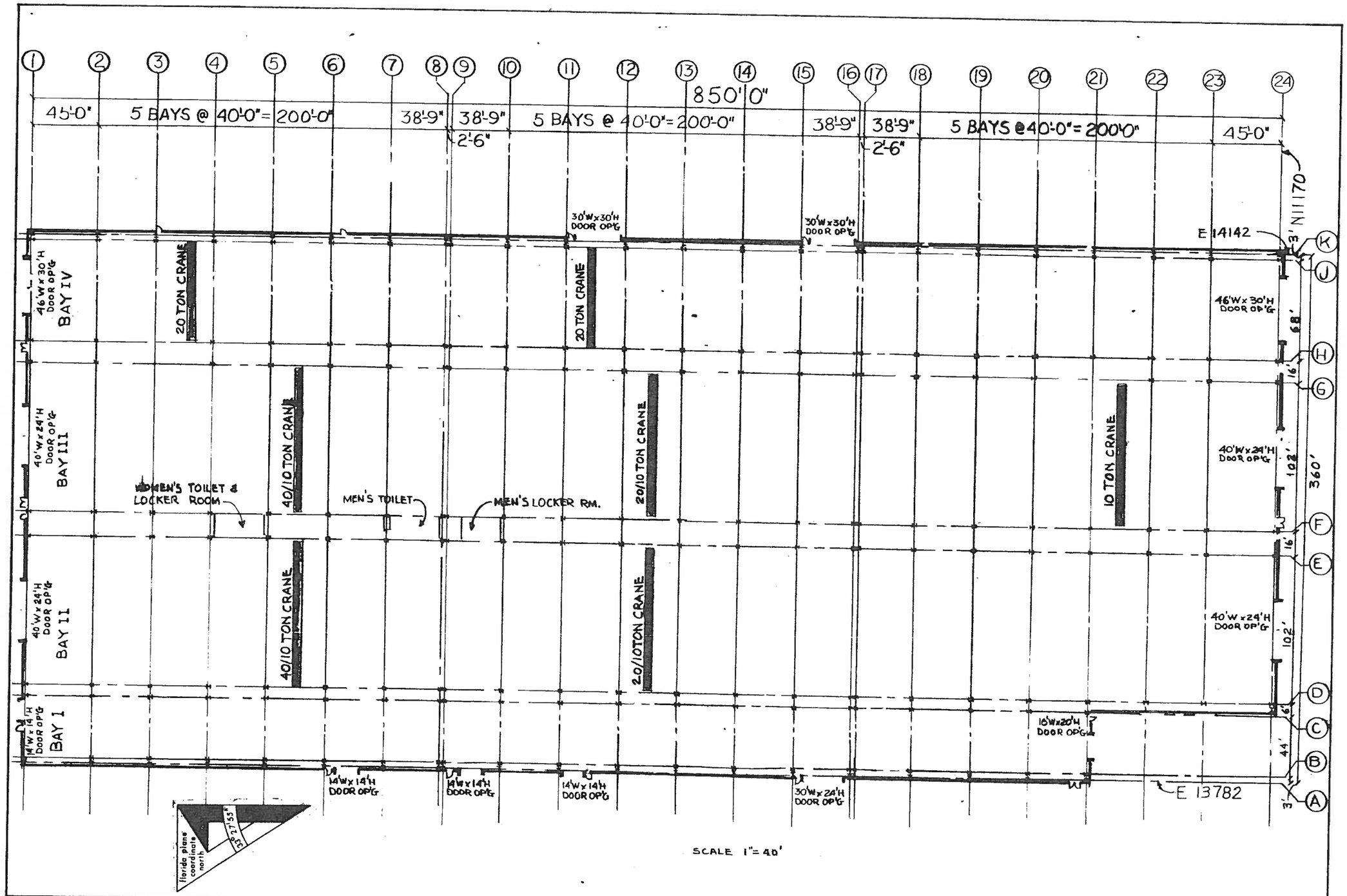

Released for construction		
Released for bidding		
Released for information only	X	H.L. Bowman
Item	rev.	approved-manager of facility engineering

Offshore Power Systems

FACILITY ENGINEERING DEPARTMENT

JACKSONVILLE, FLORIDA

THIS DOCUMENT IS THE PROPERTY OF, AND CONTAINS PROPRIETARY INFORMATION OWNED BY OFFSHORE POWER SYSTEMS, AND IS MADE AVAILABLE TO YOU UNDER A CONFIDENTIAL RELATIONSHIP AND SUBJECT TO THE FOLLOWING UNDERSTANDING, CONDITIONS AND RESTRICTIONS: NO PERMISSION IS GRANTED TO PUBLISH, USE, REPRODUCE, TRANSMIT OR DISCLOSE TO ANOTHER THIS DOCUMENT OR ANY INFORMATION CONTAINED THEREIN WITHOUT THE EXPRESS WRITTEN PERMISSION OF THE OFFSHORE POWER SYSTEMS IN ADVANCE.

STEEL FABRICATION FACILITY (3A2)

GENERAL LAYOUT (SCENARIO XVI(c))

DRAWN	SHEET
SDI	1 of 1
CHECKED HLB	
DATE 3/20/81	FILE 3A2

H:\jhartley\Clients\Konecranes\USMC\ST-1.dwg

Plotted: 3/18/11 12:33pm JHartley

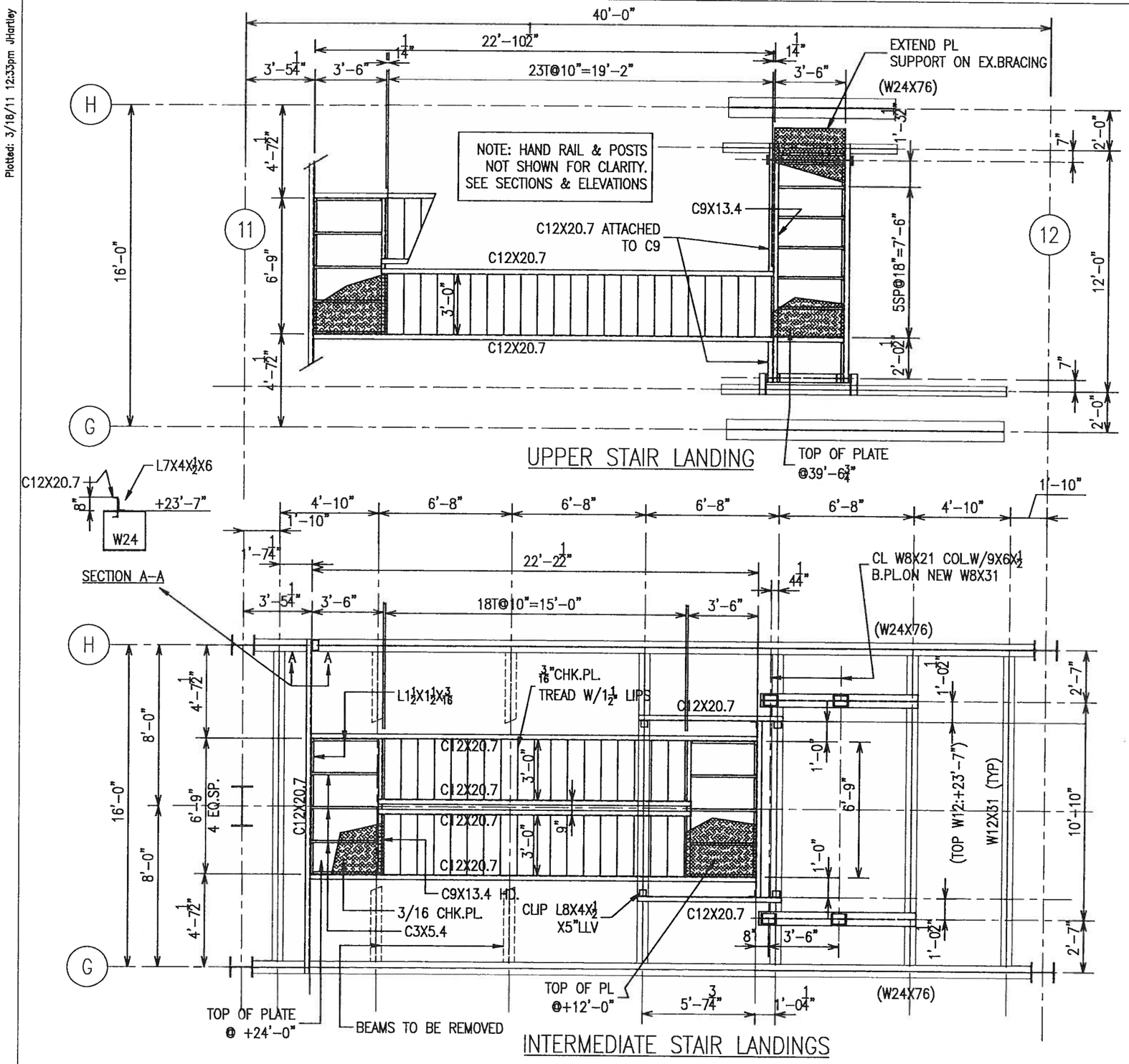

GENERAL NOTES:

1. ACCESS STAIR SYSTEM DESIGN HAS BEEN BASED ON ALLOWABLE STRESS DESIGN (ASD) AND APPLICABLE SPECIFICATION PROVISIONS AS SET FORTH IN THE 9TH EDITION MANUAL OF AMERICAN INSTITUTE OF STEEL CONSTRUCTION.
2. VERIFICATION OF EXISTING DIMENSIONS AND DETAILS ARE REQUIRED PRIOR TO THE BEGINNING OF STEEL FABRICATION.
3. EXISTING BUILDING INFORMATION HAS BEEN TAKEN FROM DRAWINGS PROVIDED FOR REFERENCE.
4. NEW STEEL MATERIAL SHALL MEET ASTM A36, FY=36 KSI.
5. WELDING SHALL CONFORM TO THE APPLICABLE PROVISIONS OF THE AMERICAN WELDING SOCIETY (AWS).
6. WELDING ELECTRODES SHALL MEET E70XX SERIES.
7. BOLTS SHALL BE 3/4" DIAMETER A325-N.
8. LOADS USED FOR THE DESIGN OF THE ACCESS STAIR SYSTEM INCLUDE:

DEAD LOAD:	WEIGHT OF MEMBER COMPONENTS
LIVE LOAD:	50 PSF
STAIR TREAD:	50 PSF OR 300 LB CONCENTRATED LOAD WHICH EVER IS MOST SEVERE

2234

LTR.	DATE	REVISIONS	BY	APPRD.

© Hartley & Assoc.

KONECRANES INC.
ORANGE PARK, FL
FOR: USMC - BLOUNT ISLAND - JACKSONVILLE, FL
BUILDING EVALUATION
FOR 25 TON CRANE

HARTLEY & ASSOCIATES, INC.
CONSULTING ENGINEERS
JACKSONVILLE, FLORIDA

SHEET TITLE:
ACCESS STAIR TO CRANE

DATE: 3/21/11
JOB NO. 2011-03
SHEET NO.
ST 1
OF
DRAWN BY: JAH
CHKD.BY: JAH
SCALE: 3/8"=1'-0"

STAIR PLANS

H:\jhartley\Clients\Konecranes\USMC\ST-2.dwg

Plotted: 3/18/11 12:46pm JHartley

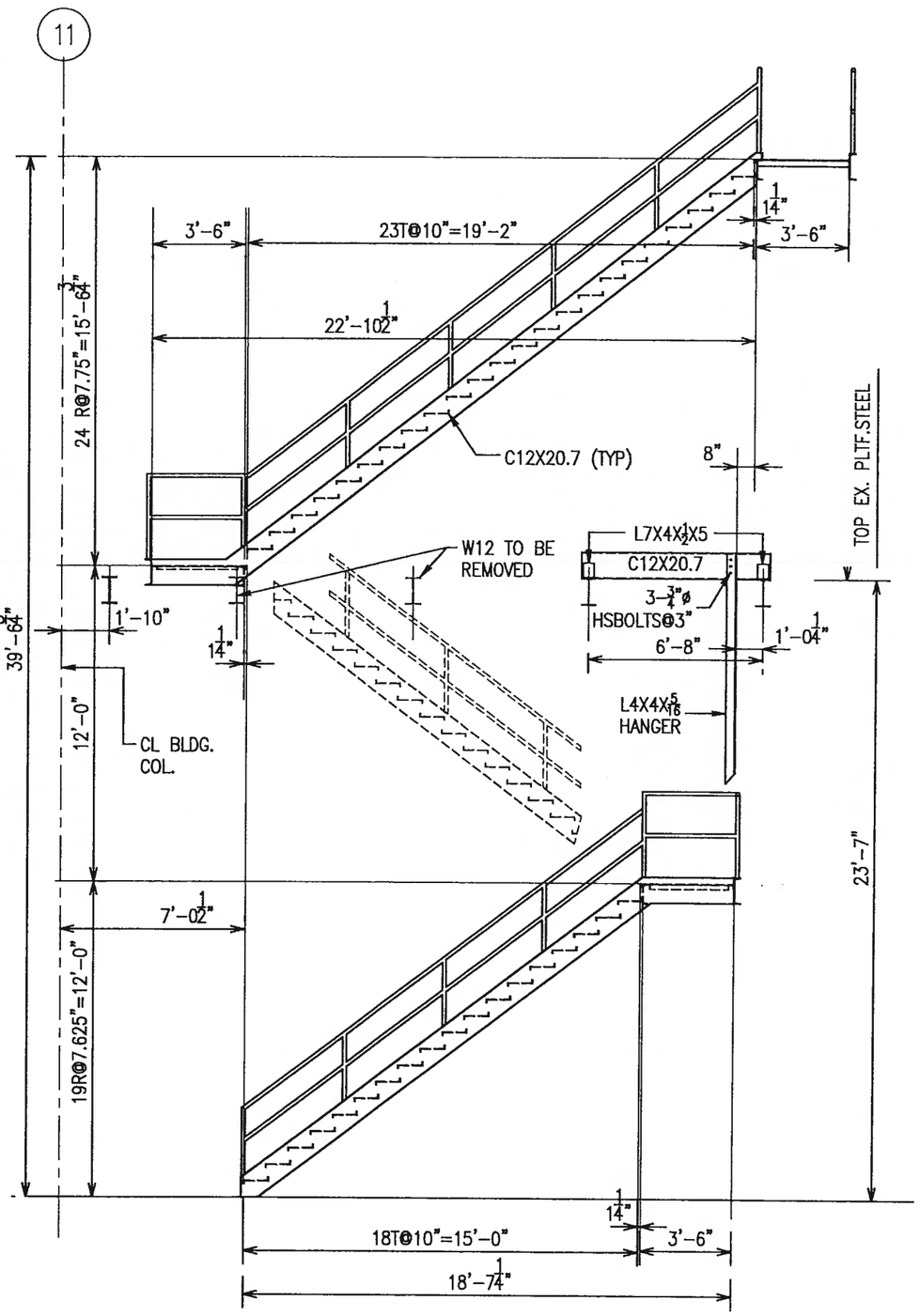

OUTER STRINGERS

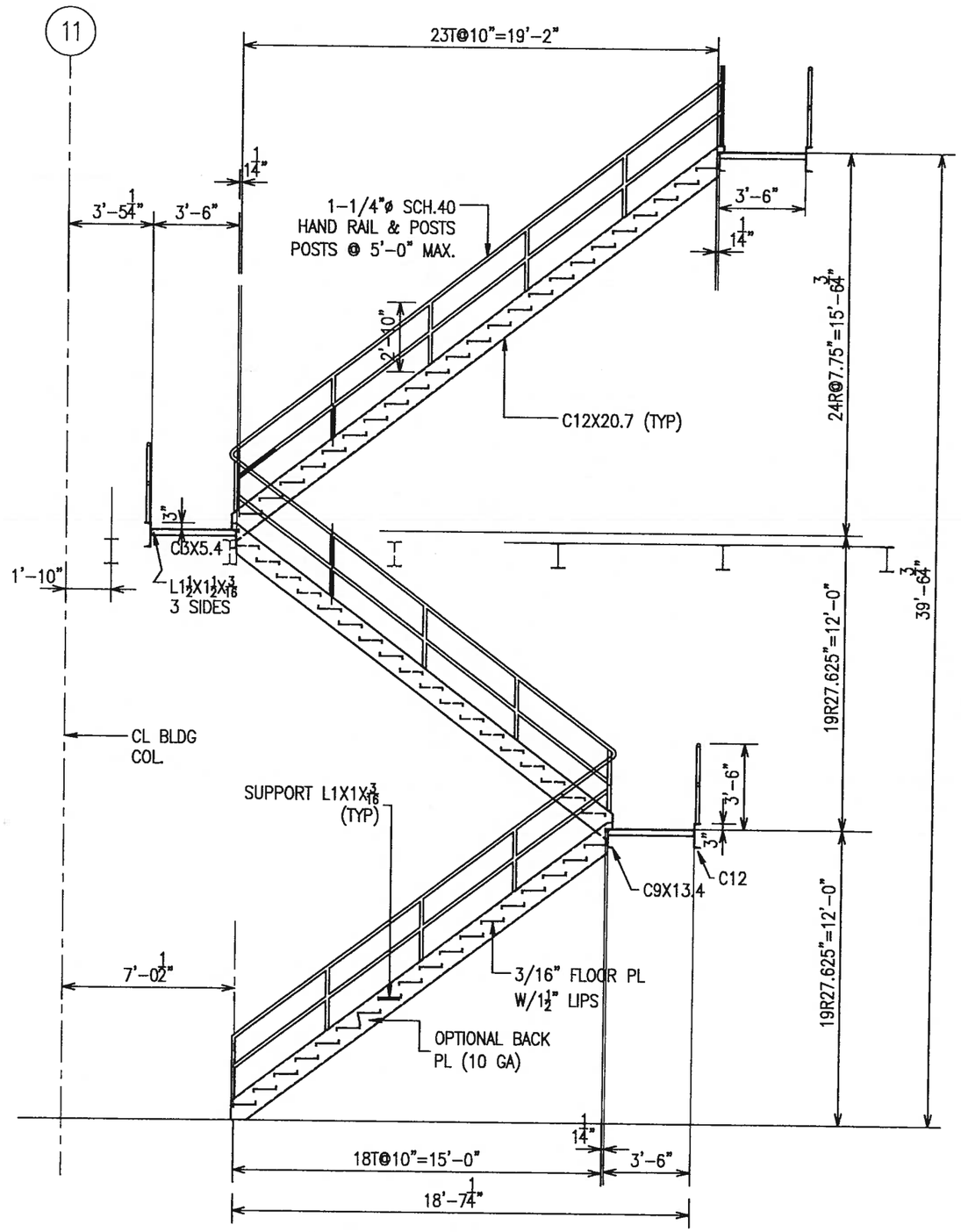

INTERIOR STRINGERS

STAIR SECTIONS

2234

LTR.	DATE	REVISIONS	BY	APPRO.

© Hartley & Assoc.

KONECRANES INC.
ORANGE PARK, FL
FOR: USMC - BLOUNT ISLAND - JACKSONVILLE, FL
BUILDING EVALUATION
FOR 25 TON CRANE

HARTLEY & ASSOCIATES, INC.
CONSULTING ENGINEERS
JACKSONVILLE, FLORIDA

SHEET TITLE:
ACCESS STAIR TO CRANE

DATE: 3/21/11
JOB NO. 2011-03
SHEET NO.
ST2
OF
DRAWN BY: JAH
CHKD.BY: JAH
SCALE: 3/8"=1'-0"

H:\jhartley\Clients\Konecranes\USMC\ST-3.dwg

Plotted: 3/18/11 12:54pm JHartley

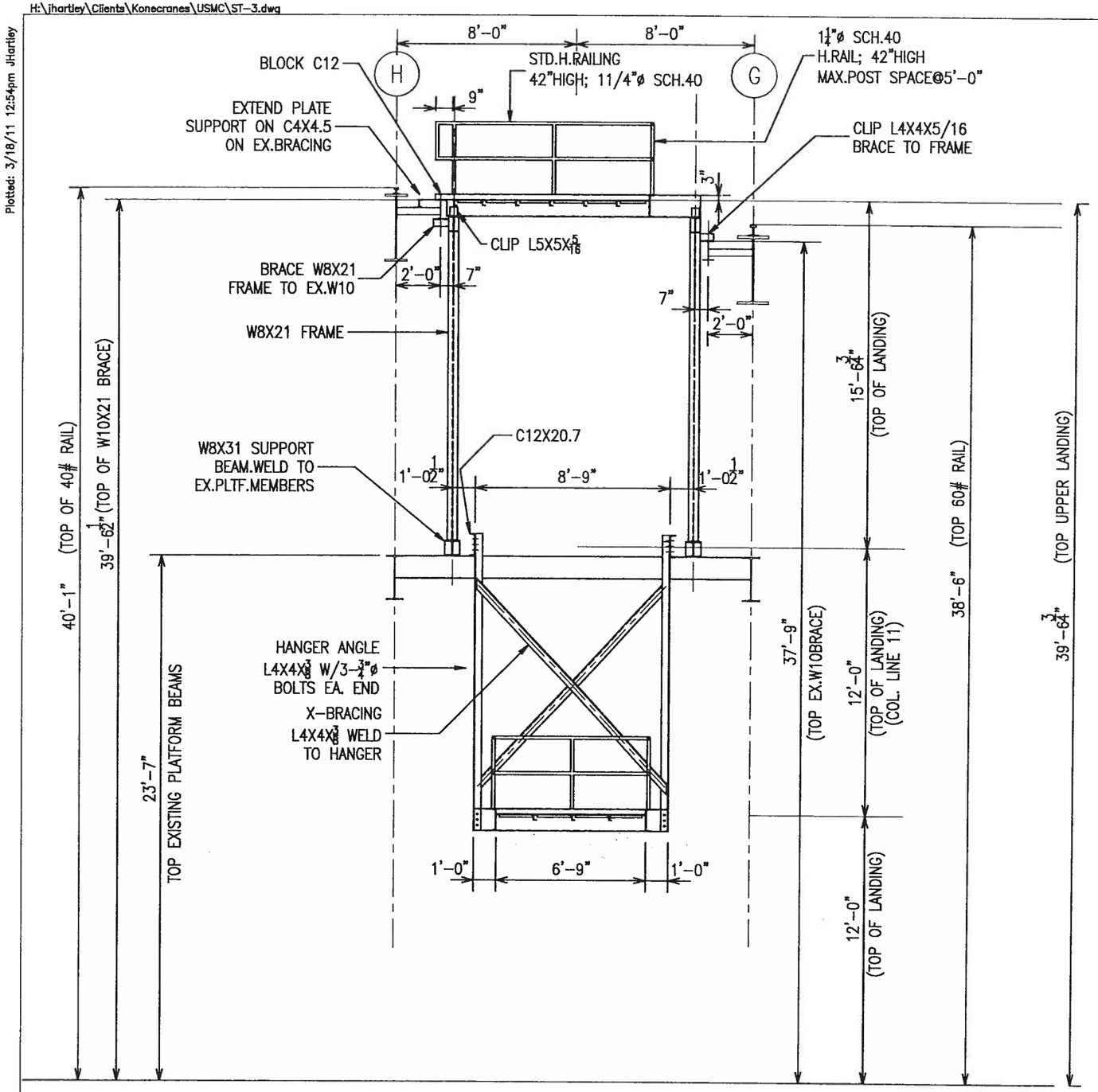

SECTION THRU STAIR LANDINGS

ST-3

2234

LTR.	DATE	REVISIONS	BY	APPRO.

© Hartley & Assoc.

KONECRANES INC.
ORANGE PARK, FL
FOR: USMC - BLOUNT ISLAND - JACKSONVILLE, FL
BUILDING EVALUATION
FOR 25 TON CRANE

HARTLEY & ASSOCIATES, INC.
CONSULTING ENGINEERS
JACKSONVILLE, FLORIDA

SHEET TITLE:
ACCESS STAIR TO CRANE

DATE: 3/21/11
JOB NO. 2011-03
SHEET NO.
ST3
OF
DRAWN BY: JAH
CHKD.BY: JAH
SCALE: 3/8"=1'-0"