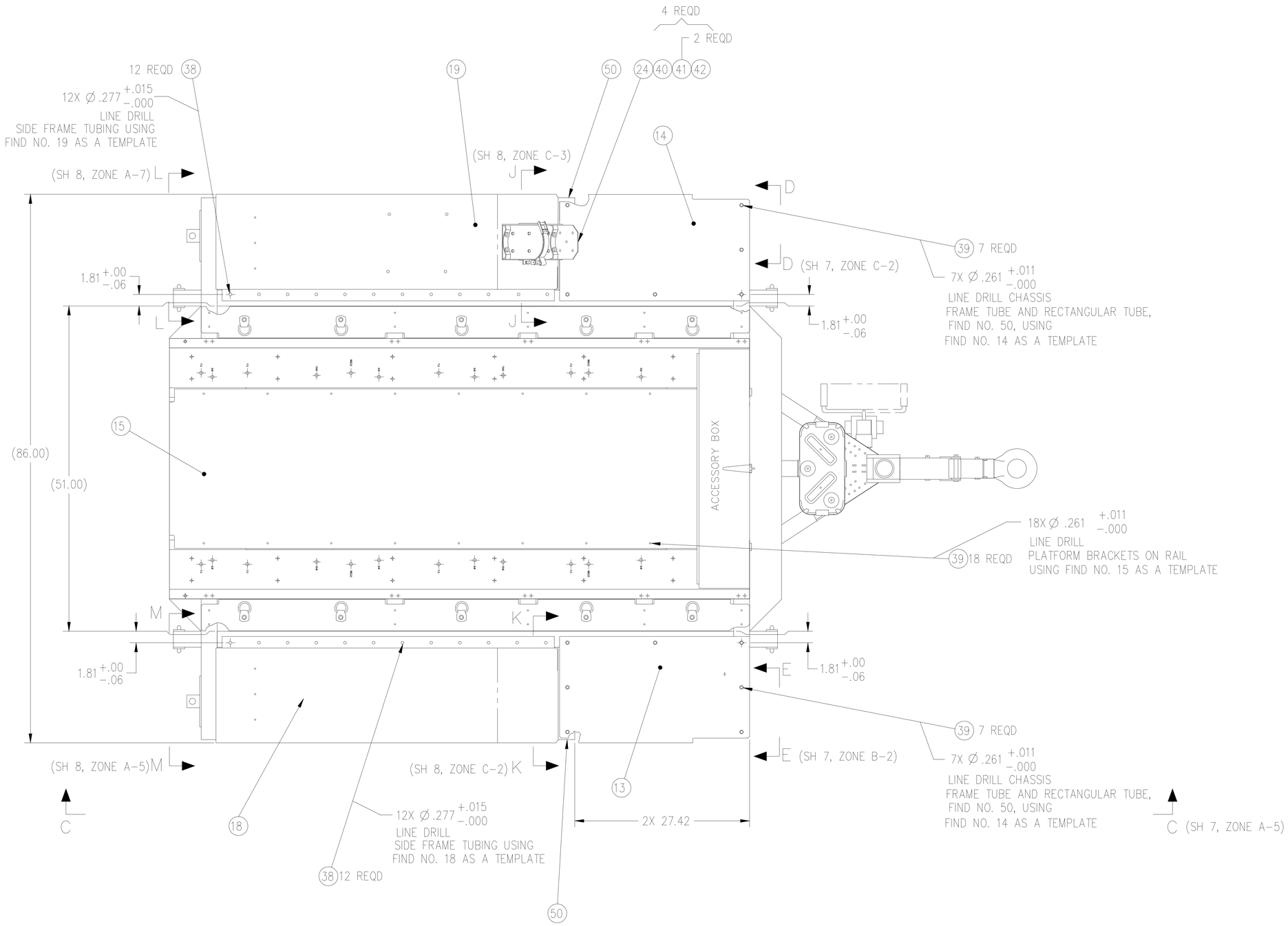

DISTRIBUTION STATEMENT A.
APPROVED FOR PUBLIC RELEASE;
DISTRIBUTION IS UNLIMITED.

SIZE	CAGE CODE	DWG NO.	REV
A1	01365	06008A0000	A
SCALE 1/8		SHEET 5 OF 8	
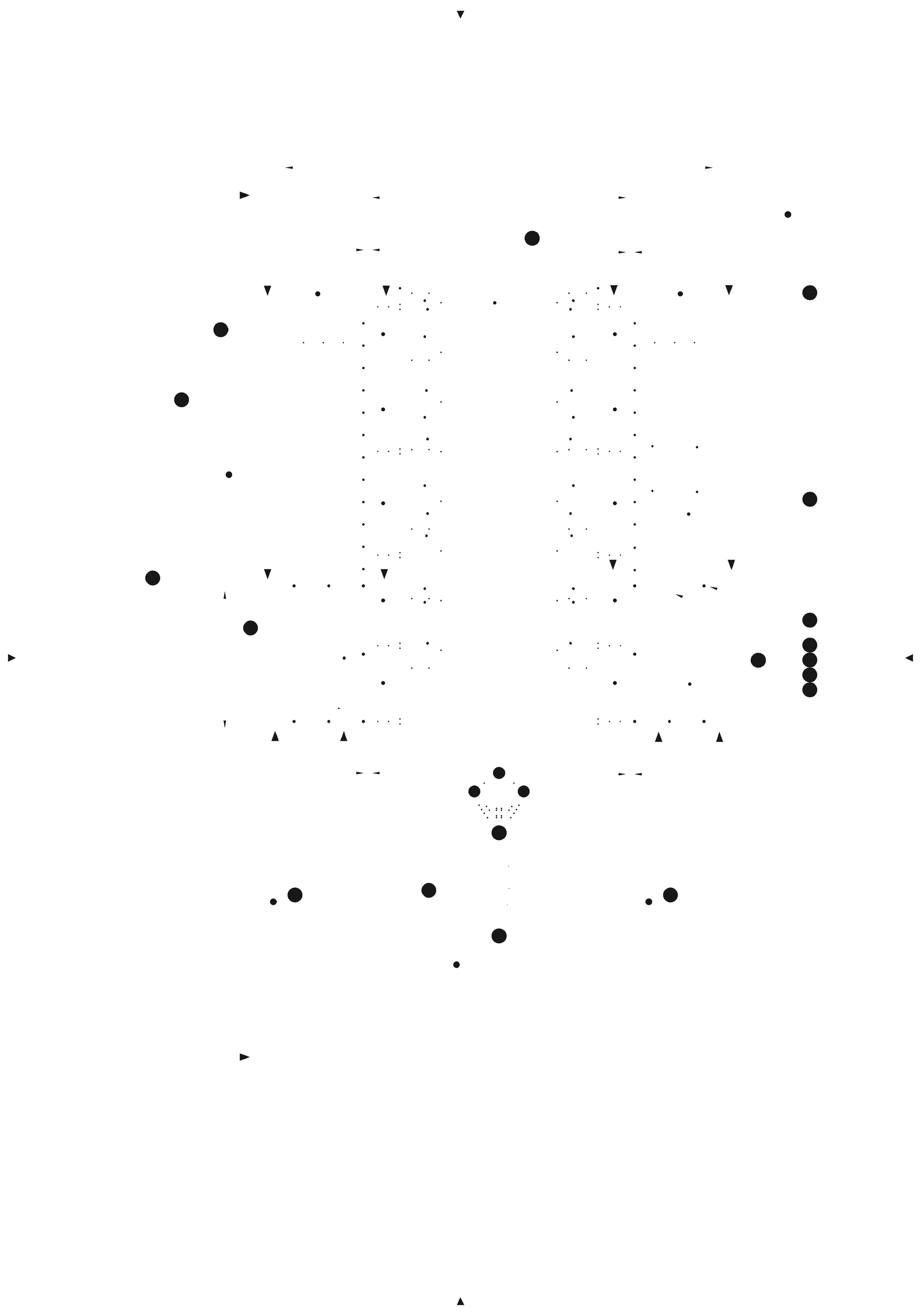
CWA 5 JULY 06 1200