PERFORMANCE SPECIFICATION

Ground Renewable Expeditionary Energy Network System (GREENS)

DRAFT

Program Manager
Expeditionary Power Systems

Marine Corps Systems Command
Quantico, Virginia

1. INTRODUCTION

This document describes the required and desired level of performance that should be reflected back to the Government in the offeror's Product Specification.

Critical Performance Parameters (CPPs) are essential to the performance of the unit, and must be met to satisfy the Government's minimum requirements. Any item not identified as a CPP is a desired attribute that adds value to the program. The offeror may also propose their Value Added features not listed here.

2. REFERENCE DOCUMENTS

This document is subject to all applicable laws and regulations in effect, unless specifically exempted by the Government.

The following documents form a part of this specification to the extent specified herein. In the event of conflict between the documents referenced herein and the contents of this specification, the contents of this specification shall be considered a superseding requirement. In the event the listed documents have been superseded, the most current version or replacement document shall be used.

Number	Title	Revision
IEEE STD-315-1975	IEEE Standard Graphic Symbols For Electrical And Electronics Diagrams	
MIL-HDBK-1857	Grounding, Bonding, Shielding Design Guidelines	
MIL-HDBK-419	Grounding, Bonding And Shielding For Electronic Equipment And Facilities, Volumes 1 & 2	A
MIL-HDBK-454	General Guidelines For Electronic Equipment	A
MIL-STD-810	Department of Defense Test Method Standard for Environmental Engineering Considerations and Laboratory Tests	F
MIL-STD-1275	Characteristics Of 28 Volt DC Electrical Systems In Military Vehicles	D
TM-S9310-AQ-SAF-010	Navy Lithium Battery Program Responsibilities and Procedures	19-Aug-04
MIL-STD-461	Requirements For The Control Of Electromagnetic Interference Characteristics Of Subsystems And Equipment	E
NFPA 70	National Electrical Code	2005
SAE J163	Low Tension Wiring And Cable Terminals And Splice Clips (DOD Adopted)	28-Dec-01
STANAG 4074	Auxiliary Power Unit Connections For Starting Tactical Land Vehicles	31-May-96
UL STD 2089	Vehicle Battery Adaptor	1998

DRAFT

3. CONFIGURATION

3.1. General

3.1.1. The Ground Renewable Expeditionary Energy Network System (GREENS) shall be a system composed of the following known and potential components to collect, manage, and distribute electric power:

- Controller (included in this solicitation)
- Lithium Battery, battery manager and cabling (included in this solicitation)
- Lead Acid Training Battery and cabling (included in this solicitation)
- Output power distribution (included in this solicitation)
- Output paralleling adaptor (included in this solicitation)
- Input paralleling adaptor (included in this solicitation)
- Renewable energy power source (not included in this solicitation)
- Fuel fired generator (not included in this solicitation)

3.1.2. As parts of the GREENS system, the components requested in this solicitation shall be capable of being assembled to perform the following four functions:

- Collect input power from designated sources
- Provide regulated output power to designated sources and connections
- Provide system control and management
- Store energy from power generation sources

3.2. Renewable Energy Input (information provided for reference)

3.2.1. The renewable energy generation is not a part of this solicitation. The system requested in this solicitation will be expected to interface and accept optimized power from the below existing solar energy supply. The following information is provided to understand the interface and the solar energy used.

3.2.2. Figure 1 lists the specifications of the solar panels used for the GREENS system. 8 of these panels will be placed in parallel for a total rated power producing capability of 1640 Watts. The solar energy system will produce 8000Wh of electrical power on a sunny day. Maximum cable lengths from each solar panel to the controller will be 20 ft.

DRAFT

Figure 1. Specification Sheet of Solar Panel used with GREENS

Electrical Specifications

Model	HIT Power 220A or HIT-N220A01
Rated Power (Pmax)[1]	220 W
Maximum Power Voltage (Vpm)	42.7 V
Maximum Power Current (Ipm)	5.17 A
Open Circuit Voltage (Voc)	52.3 V
Short Circuit Current (Isc)	5.65 A
Temperature Coefficient (Pmax)	-0.336%/ °C
Temperature Coefficient (Voc)	-0.145 V/ °C
Temperature Coefficient (Isc)	1.98 mA/ °C
NOCT	114.8°F (46°C)
CEC PTC Rating	204.4 W
Cell Efficiency	19.8%
Module Efficiency	17.4%
Watts per Ft.^{2}	16.22 W
Maximum System Voltage	600 V
Series Fuse Rating	15 A
Warranted Tolerance (-/+)	-0% / +10%

Mechanical Specifications

Internal Bypass Diodes	3 Bypass Diodes
Module Area	13.56 Ft^2 (1.26m^2)
Weight	35.3 Lbs. (16kg)
Dimensions LxWxH	62.2x31.4x1.8 in. (1580x798x46 mm)
Cable Length +Male/-Female	46.45/40.55 in. (1180/1030 mm)
Cable Size / Type	No. 12 AWG / PV Cable
Connector Type[3]	Multi-Contact® Type IV (MC4™)
Static Wind / Snow Load	60PSF (2880Pa) / 39PSF (1867Pa)
Pallet Dimensions LxWxH	63.2x32x72.8 in. (1607x815x1850 mm)
Quantity per Pallet / Pallet Weight	34 pcs./1234.5 Lbs (560 kg)
Quantity per 53' Trailer	952 pcs.

Operating Conditions & Safety Ratings

Ambient Operating Temperature[2]	-4°F to 115°F (-20°C to 46°C)
Hail Safety Impact Velocity	1" hailstone (25mm) at 52 mph (23m/s)
Fire Safety Classification	Class C
Safety & Rating Certifications	UL 1703, cUL, CEC
Limited Warranty	5 Years Workmanship, 20 Years Power Output

[1] STC: Cell temp. 25°C, AM1.5, 1000W/m^2 [2] Monthly average low and high of the installation site.
Note: Specifications and information above may change without notice.
All modules connected in the solar array should be of the same model number.

Dependence on Temperature

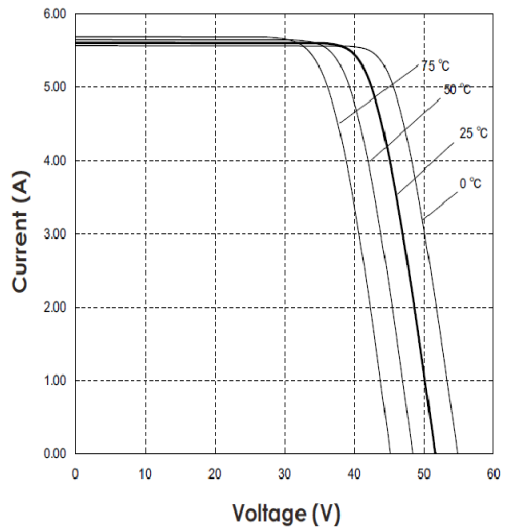

Dependence on Irradiance

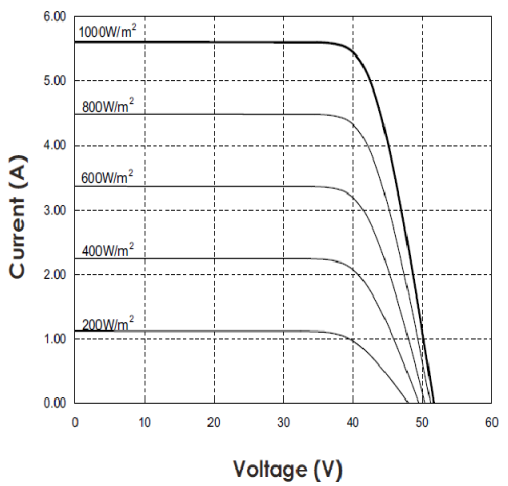

3.3. Controller Performance

3.3.1. The GREENS controller shall serve as a power manager device that accepts and distributes various power inputs, provides output control signals for auto start capability of generators and manages output power. The controller shall contain all necessary power receptacles, electronic circuits, and other necessary hardware, software, and control devices to carry out all GREENS functionality described in section 3.4. All requirements are predicated on use of the Lithium based, High Energy Density Battery System.

3.3.2. Nominal output of the GREENS controller and battery system shall be capable of providing 300W power continuous if provided 8000Wh of energy each day over an 8 hour period at all CPP environmental conditions. **This is a Critical Performance Parameter (CPP)**

3.3.3. The GREENS controller shall produce a total maximum sustained output of 1000W, at a constant 24VDC output power under all CPP environments. **This is a Critical Performance Parameter (CPP)**

3.3.4. The GREENS controller shall be packaged and delivered in a rugged, waterproof (IP-67 or better) enclosure suitable for operation, shipping and storage. The enclosure should be minimized in terms of size and weight and should include two handles for easy transport. **This is a Critical Performance Parameter (CPP)**

3.3.5. When packaged, the GREENS controller shall not exceed 60 lbs. **This is a Critical Performance Parameter (CPP)**

3.3.6. The GREENS controller shall prioritize the use of its power inputs. This power input prioritization shall utilize solar first, followed by battery, AC and finally DC inputs respectively. If insufficient solar power is available to meet the load demand and the batteries reach a low state of charge, the auto start signal (Requirement 3.3.14) should be activated and AC or DC input power should be used to prevent load drop out and recharge the batteries. This power source should be used until the equivalent of three hours of run time (900Wh) has been added to the battery. At this time the AC or DC power should be shut off and the battery should resume the load demand. AC or DC should be restarted again when the battery reaches a low state of charge. If solar power sufficient enough to provide the load requirements becomes available at any time the system should preferentially use the solar energy. **This is a Critical Performance Parameter (CPP)**

3.3.7. The GREENS controller shall be capable of charging the HEDBS batteries to 100% state of charge using AC input power if the user select to do so or no solar is connected to the system. This requirement shall not affect requirement 3.3.6 above. **This is a Critical Performance Parameter (CPP)**

3.3.8. The government intends to utilize a wide breadth of renewable energy collection devices (photovoltaic, wind, etc) as well as traditional energy generation devices (VDC and VAC) with the GREENS. The GREENS should have as wide an operating range as possible to function with current, and future, energy devices.

3.3.8.1. At a minimum the GREENS controller shall be capable of accepting input power from 120VAC, 40-60Hz, 20-36VDC, and the solar power array described in 3.2 (Up to 70VDC). **This is a Critical Performance Parameter (CPP)**

3.3.8.2. Minimum total input power capability should be 2000W over all four J-R plugs at all CPP environmental conditions. Power input should be intelligently distributed between energy storage and power output depending on system load requirements. Careful consideration should be made to insure peak power performance at operating temperature extremes. **This is a Critical Performance Parameter (CPP)**

3.3.9. The GREENS controller shall optimize the solar input from the J-R connectors though the use of peak power tracking technology or equivalent, over a wide range of solar light conditions. **This is a Critical Performance Parameter (CPP)**

DRAFT

3.3.10. The GREENS controller shall have two handles that allows for easy carrying by one or two people. **This is a Critical Performance Parameter (CPP)**

3.3.11. The GREENS controller shall be able to efficiently utilize both the high energy density battery system (HEDBS) provided in section 3.5 and lead acid batteries including AGM and flooded 12V batteries as its energy storage technology. **This is a Critical Performance Parameter (CPP)**

3.3.12. The GREENS controller shall be capable of connecting to the four (4) HEDBS battery modules described in section 3.5, at different states of charge and health, without any safety event occurring and balance those batteries to optimize performance of the energy storage system. **This is a Critical Performance Parameter (CPP)**

3.3.13. The controller changes needed to switch between battery types listed in 3.4.10 should be as transparent as possible to the user.

3.3.14. The GREENS controller shall be able to supply a 5 VDC auto start generator signal though the J12-C connector. This signal shall be sent when the batteries are at a low state of charge and terminated when the batteries are at higher state of charge. The signal activation and deactivation points should be selected based on load demands, renewable energy input, battery state of charge and energy storage type selected. **This is Critical Performance Parameter (CPP)**

3.3.15. All inputs and output to the GREENS controller shall have resettable electrical overload protection with a manual on/off capability for rapid disconnect functions. **This is a Critical Performance Parameter (CPP)**

3.3.16. The GREENS controller shall have over-charge, over-discharge, over-current, and over temperature protection for the battery system selected. **This is a Critical Performance Parameter (CPP)**

3.3.17. The GREENS controller shall automatically disengage and reengage the battery when it can appropriately support the load present. **This is a Critical Performance Parameter (CPP)**

3.3.18. The GREENS controller shall be designed to prevent cyclic activation caused by pure voltage cut-offs. This type of cyclic behavior can occur when the battery is at a low state of charge and a load is still present. When a low voltage cut off is activated and the load is removed the voltage will recover rapidly. Once the voltage has recovered the load will be reactivated even though the state of charge of the battery is still low causing the voltage cut-off to activate again. This potential cyclic behavior should not occur until the system can truly support the load. **This is a Critical Performance Parameter (CPP)**

3.3.19. The GREENS controller shall accommodate the ability to use new battery systems as its energy storage device. **This is a Critical Performance Parameter (CPP)**

3.3.20. The GREENS controller shall provide feedback to the user as to the state of charge of the energy storage and the level of solar power being generated. **This is a Critical Performance Parameter (CPP)**

DRAFT

3.3.21. Controller Connectors

3.3.21.1. All GREENS controller connectors shall be provided with a protective dust cover.

3.3.21.2. All GREENS connectors shall be physically protected from direct impact damage.

3.3.21.3. All GREENS controller plugs shall be diode isolated from each other. **This is a Critical Performance Parameter (CPP)**

3.3.21.4. Table 1 summarizes the cables as part of this solicitation.

3.3.21.5. The GREENS controller shall provide two 24VDC power output receptacles, labeled as J1-O, J2-O. **This is a Critical Performance Parameter (CPP)**

3.3.21.6. Each J-O connector shall be capable of a minimum of 1000W of pass though power at 24VDC in all CPP environments. **This is a Critical Performance Parameter (CPP)**

3.3.21.7. Two (2) 20 foot long cables terminating in 4-pin female Amphenol 97-3106A-18-10S (or equivalent) with Amphenol strain relief 97-3057-1010 (or equivalent) at other end and the corresponding J-O mating connector, at the other shall be provided with each controller.

3.3.21.8. The GREENS controller shall provide four renewable energy power input receptacles, labeled as J3-R, J4-R, J5-R and J6-R. **This is a Critical Performance Parameter (CPP)**

3.3.21.9. Each J-R connectors shall be capable of a minimum of 500W of pass though power in all CPP environments. All the J-R connectors combined should be capable of a minimum of 2000W of power. **This is a Critical Performance Parameter (CPP)**

3.3.21.10. Four (4) 20 foot long cables terminating in ITT Cannon APD High Power connector, part number APD-1APH8-2, at one end and the corresponding J-R mating connector, with strain relief, at the other shall be provided with each controller.

3.3.21.11. Maximum distance between controller and renewable energy input shall be 20 feet. Any losses over this distance shall be minimized. **This is a Critical Performance Parameter (CPP)**

3.3.21.12. The GREENS controller shall provide four energy storage (battery) throughput receptacles, labeled as J7-B, J8-B, J9-B and J10-B. **This is a Critical Performance Parameter (CPP)**

3.3.21.13. Each J-B connector shall be capable of a minimum of 500W of pass though power for a total capability of 2000W of pass though power to the total energy storage system. **This is a Critical Performance Parameter (CPP)**

3.3.21.14. Four (4) 20 foot long cables terminating in the connector used on the High Energy Density Battery System (HEDBS) described in section 3.5 on one end and the

DRAFT

corresponding J-B mating connector, with strain relief, on the other shall be provided with each controller.

3.3.21.15. The controller J-B receptacles shall be capable of being attached to the high energy density battery developed under this solicitation. **This is a Critical Performance Parameter (CPP)**

3.3.21.16. The GREENS controller shall provide one 9-32 VDC power input receptacle with a minimum of 1000W power capability and labeled as J11-D. **This is a Critical Performance Parameter (CPP)**

3.3.21.17. One (1) 20 foot long cable terminating in pig tales at one end and the J-D mating connector, with strain relief, at the other end shall be provided with each controller.

3.3.21.18. The GREENS controller shall provide one 120VAC, 40-60Hz, IEC C14 input receptacle capable of 1000W and labeled J12-A. **This is a Critical Performance Parameter (CPP)**

3.3.21.19. One (1) 20 foot long cable terminating in IEC C13 at one end and the J-A mating connector, with strain relief, at the other end shall be provided with each controller.

3.3.21.20. The GREENS controller shall provide one control signal receptacle capable of sending out a 5VDC generator auto start signal, labeled as J12-C. **This is a Critical Performance Parameter (CPP)**

3.3.21.21. The GREENS controller shall provide one software management receptacle labeled as J13-S (if required).

3.3.21.22. Receptacles with different letter designations (R, B, D, A, C, S) shall not be able to plug into one another. **This is a Critical Performance Parameter (CPP)**

3.3.21.23. One (1) 20 foot long cables terminating in pig tails at one end and the corresponding J-O mating connector, with strain relief, at the other shall be provided with each controller.

3.3.21.24. Two (2), five (5) foot long (Lead Acid Training Battery System) LATBS paralleling cable able to connect two LATBS to one GREENS HEDBS battery cable plug shall be provided. **This is a Critical Performance Parameter (CPP)**

DRAFT

Cable Name	Requirement Number	Number of Cables	Length	Plug types	Minimum Power Capability
Renewable Energy Input	3.3.21.10	4	20 feet	J-R plug/ APD-1APH8-2	500W
Battery Cable	3.3.21.14	4	20 feet	J-B/battery plug	500W
24VDC input	3.3.21.17	1	20 feet	J-D/pig tail	1000W
120VAC input	3.3.21.19	1	20 feet	IEC C13/NEMA 5-15P	1000W
5V auto Start Cable	3.3.21.20	1	20 feet	J-C/pig tail	N/A
Control Cable (If needed)	3.3.21.21	1	N/A	J-S/USB 2.0	N/A
24VDC output	3.3.21.7	2	20 feet	J-O/AMP 97-3106A-18-10S	1000W
24VDC output	3.3.21.23	1	20 feet	J/O/pig tail	1000W
LATBS cable	3.3.21.24	2	5 feet	HEDBS plug/Two LATBS plugs	500W

3.4. High Energy Density Battery System (HEDBS)

3.4.1. The HEDBS shall have a minimum threshold energy density of 60Wh/kg and an objective energy density of 120Wh/kg. These energy density numbers include the battery packaging and management system. **This is a Critical Performance Parameter (CPP)**

3.4.2. The HEDBS battery shall consist of 4 modules each with minimum energy storage of 1200Wh. Total (4 modules) the system shall have minimum energy storage of 4800Wh. **This is a Critical Performance Parameter (CPP)**

3.4.3. Each HEDBS battery module shall have a IP-67 connectors to connect to the GREENS controller box. **This is a Critical Performance Parameter (CPP)**

3.4.4. Each HEDBS battery module shall have a battery management system that will manage charging and protect against over-charge, over-discharge, over-current and over-temperature. **This is a Critical Performance Parameter (CPP)**

3.4.5. Each HEDBS battery manager and battery ensemble shall be packaged together and delivered in a rugged, waterproof (IP-67 or better) container suitable for operation, shipping and storage at all the CPP environmental conditions. The container should be minimized in terms of size and weight and should include a handle(s) for easy transport. **This is a Critical Performance Parameter (CPP)**

3.4.6. The HEDBS battery, when receiving input from the controller, shall be capable of operating and successfully charging the attached batteries to 100% state of charge in ambient temperatures ranging from -4 degrees F to +131 degrees F in any operating configuration. **This is a Critical Performance Parameter (CPP)**

DRAFT

3.4.7. All HEDBS batteries shall be labeled and serialized for ease of set-up and tracking. **This is a Critical Performance Parameter (CPP)**

3.4.8. It is desired all HEDBS batteries shall be packaged, labeled and suitable for worldwide transport.

3.4.9. For any HEDBS batteries that require special shipping and handling, all required documentation, including Material Data Safety Sheets, shall be provided. **This is a Critical Performance Parameter (CPP)**

3.5. Lead Acid Training Battery System (LATBS)

3.5.1. The LATBS shall utilize best commercial, deep cycle lead acid batteries, while maximizing energy storage. **This is a Critical Performance Parameter (CPP)**

3.5.2. The LATBS battery shall consist of 24VDC batteries, minimum of 50Ah, that are 2-man portable with a maximum weight of 115lbs. **This is a Critical Performance Parameter (CPP)**

3.5.3. A total of 6 LATBS should be able to connect to the 4 GREENS controller battery inputs using the existing GREENS battery cables and the LATBS battery paralleling cable (3.3.24.21). **This is a Critical Performance Parameter (CPP)**

3.5.4. Each LATBS battery module shall have an IP-67 connector to connect to the GREENS controller box via the existing HEDBS connector using the same cables provided for the HEDBS. **This is a Critical Performance Parameter (CPP)**

3.5.5. Each LATBS battery module shall have a resettable circuit breaker which protects against short circuit and over-current conditions. **This is a Critical Performance Parameter (CPP)**

3.5.6. Each LATBS shall be packaged in a rugged, waterproof (IP-67 or better) container suitable for operation, shipping and storage at all the CPP environmental conditions. The container should be minimized in terms of size and weight and should include two handle(s) for easy two man transport. **This is a Critical Performance Parameter (CPP)**

3.5.7. The LATBS battery, when receiving input from the GREENS controller, shall be capable of operating and successfully charging the attached batteries to 100% state of charge in ambient temperatures ranging from -4 degrees F to +131 degrees F in any operating configuration. **This is a Critical Performance Parameter (CPP)**

3.6. Output Power Distribution

3.6.1. The GREENS Output Power Distribution system (options are graphically depicted in Appendix B) shall consist of commercial grade components that provides the following function:

3.6.1.1. Two (2) power distribution panels, size minimized, with single input of a 4-pin Amphenol 97-3106A-18-10P and output of quantity six (6) AMP 211398-2 female

receptacles suitable for 12 VDC and 24 VDC power distribution. The panel shall take the nominal 24VDC GREENS controller output and provide 12VDC and 24VDC outputs though the 6 AMP plugs without the use of "smart cables". Any power conversions needed to provide the 12VDC or 24VDC output shall be integral to the panel. Pin-out wiring will be provided at Post Award Conference.

3.6.1.2. One (1) Battery Wire/Cable Connector, Wire Size 4 AWG, Current Rating 120 Amps, Maximum Wire Diameter 0.3 Inch, Cable Well Depth 0.81 Inch, Color Gray, Female, two pole, polycarbonate shell, ANDERSON POWER PRODUCTS 6800G2 or equivalent.

3.6.1.3.One (1) cable, no less than five (5) feet long, with AMP 211398-2 male plug on input end and compatible input power connector for Panasonic Toughbook® ruggedized computer on output end.

3.6.1.4.One (1) cable, no less than five (5) feet long, with AMP 211398-2 male plug on input end and compatible input power connector for AN/PRC-119F Tactical Radio on output end.

3.6.1.5.One (1) cable, no less than five (5) feet long, with AMP 211398-2 male plug on input end and compatible input power connector for AN/PRC-152 tactical hand held radio (less battery attached) on output end.

3.6.1.6.One (1) cable, no less than five (5) feet long, with AMP 211398-2 male plug or a cigarette lighter male on input end and the ability to charge a minimum of four (4) AN/PRC-152 tactical hand held radio batteries.

3.6.1.7.One (1) cable, no less than five (5) feet long, with AMP 211398-2 male plug or a cigarette lighter male on input end and the ability to charge a minimum of four (4) AN/PRC-153 tactical hand held radio batteries.

3.6.1.8.Two (2) cables, no less than five (5) feet long each with AMP 211398-2 male plug (12 VDC) on input end and 12-volt cigar lighter (UL Std 2089) size A female socket on output end.

3.6.1.9.One (1) Inverter and cable and of no less than ten feet long, with 12-volt cigar lighter (UL Std 2089) size A male plug on input end and DC-AC inverter with 3-prong AC receptacle rated for no less than 250 watts at 120 VAC, 60 HZ, modified sine wave, at 104 degrees Fahrenheit.

3.6.1.10. One (1) USB power adaptor with 12-volt cigarette lighter (UL Std 2089) size A male plug on input end and no less than 4 USB powered receptacles on output end.

3.6.1.11. One (1) AA battery charger assembly and cabling of no less than three (3) feet long, with cigarette lighter male plug on input end and simultaneous charging locations for no less than 8 commercial AA rechargeable batteries. Eight new rechargeable batteries shall be provided with charger.

DRAFT

3.6.1.12. Two (2) BB-2590/U battery charging assemblies and cabling of no less than five (5) feet long, with AMP 211398-2 male plug on input end and charging port for BB-2590 battery on output end.

3.6.1.13. One (1) cable, no less than five (5) feet long, with AMP 211398-2 male plug (24 VDC) on input end and Canon MS 116F8-2P female plug on output end to interface and power the USMC MRC-93 Radio Power Adaptor that supports the AN/PRC-117F tactical radio.

3.6.1.14. One (1) ruggedized transport case with carrying handles and interior padding sufficiently sized to accommodate all components of paragraph 3.6.

3.7. Output Paralleling Adaptor

3.7.1. The Output Paralleling Adaptor shall consist of one enclosure that can receive up to five (5) GREENS DC maximum outputs (1000W) and redistribute this power to one (1) nominal 24VDC load source (5000W).

3.7.2. The five (5) input plugs to the Output Paralleling Adaptor shall be 4-pin male Amphenol 97-3106A-18-10S receptacles or equivalent.

3.7.3. The output plug from shall be a single female NATO slave plug in accordance with STANAG 4074.

3.7.4. The Output Paralleling Adaptor shall provide diode isolation of DC inputs.

3.8. Environmental Performance

3.8.1. The GREENS and all delivered components shall be designed for use and storage conditions encountered in an unprotected, uncontrolled, outdoor environment. This is a **Critical Performance Parameter (CPP)**

3.8.2. The GREENS and all delivered components shall be capable of being shipped worldwide via commercial air, rail, sea, and highway transportation. Any special considerations should be taken into account and provided by the contractor. **This is Critical Performance Parameter (CPP)**

3.8.3. The GREENS controller will constantly operate at all fully rated input and output loads in temperatures ranging from -4 degrees F to +131 degrees F. **This is a Critical Performance Parameter (CPP)**

3.8.4. The GREENS and all delivered components shall remain operable after storage in ambient temperatures ranging from -59 degrees F to +160 degrees F. **This is Critical Performance Parameter (CPP)**

3.8.5. The GREENS and all delivered components shall be able to operate in at least 95% non-condensing relative humidity at +131 degrees F without damage (tested in accordance with MIL-STD-810F Method 507.4). **This is Critical Performance Parameter (CPP)**

DRAFT

3.8.6. The GREENS and all delivered components shall meet corrosion resistance (salt fog) requirements (tested in accordance with MIL-STD-810F, Method 509.4). **This is Critical Performance Parameter (CPP)**

3.8.7. The GREENS and all delivered components shall meet sand and dust performance requirements (tested in accordance with MIL-STD-810F, Method 510.4, procedures I and II). **This is Critical Performance Parameter (CPP)**

3.8.8. The GREENS and all delivered components shall meet the requirements of transit drop shock (multiple drops per MIL-STD 810F, Method 516.5, Procedure IV) from a height of 30 inches onto a hard surface and still operate properly (tested in accordance with MIL-STD-810F, Method 516.5, procedure IV). **This is Critical Performance Parameter (CPP)**

3.8.9. The GREENS and all delivered components shall withstand the impact forces and meet the requirements, without damage or permanent deformation, of the loose cargo bounce and vibration test for one hour each, in each of the 3 axis (tested in accordance with MIL-STD-810F, Method 514.5, Procedure II, Category 5). **This is Critical Performance Parameter (CPP)**

3.8.10. The GREENS and all delivered components shall function properly after immersion in water at a depth of 1 meter for 30 minutes (tested in accordance with MIL-STD-810F, Method 512.4, Procedure I, at saltwater temperature of 78-86 degrees F). Immersion will be while the system and components are not operating, and stowage in a carry case is acceptable, if said case is provided. **This is Critical Performance Parameter (CPP)**

3.8.11. The GREENS and all delivered components shall meet rain resistance standards (tested in accordance with MIL-STD-810F, Method 506.4, Procedure I, up to 4.0 in/hr rain fall rate), and operate properly during and after exposure to rain while in any operating or transport configuration. **This is Critical Performance Parameter (CPP)**

3.8.12. The GREENS and all delivered components shall operate in any configuration at un-pressurized altitudes up to 15,000 feet Above Sea Level. **This is Critical Performance Parameter (CPP)**

3.8.13. The GREENS and all delivered components shall be capable of operation after shipment or transportation at un-pressurized altitudes up to 50,000 feet Above Sea Level. **This is Critical Performance Parameter (CPP)**

3.8.14. All cords provided shall be rated for 221 degrees F or above.

3.8.15. All cords provided shall be waterproof (IP-67 or better), oil resistant, and sunlight resistant. **This is Critical Performance Parameter (CPP)**

3.8.16. The GREENS shall be immune to radio frequency (RF) / Electromagnetic Interference (EMI). To control the electromagnetic emissions and susceptibility characteristics of the GREENS, the installation of electrical/electronics subsystems and associated interface

DRAFT

shall conform to the performance requirements for CE102, RE102 and RS103 of MIL STD461E for the Ground Navy installation.

3.9. Safety & Human Factors

3.9.1. All components of the GREENS overall design should incorporate methods to protect personnel from inadvertent contact with voltages capable of producing shock hazards. **This is Critical Performance Parameter (CPP)**

3.9.2. All components of the GREENS shall require no more than one person a maximum of 15 minutes to set up and operate in any operating configuration. This time excludes the solar panel set up. **This is a Critical Performance Parameter (CPP)**

3.9.3. All components of the GREENS shall provide permanent warning labels and/or indicators to warn of human hazards. **This is Critical Performance Parameter (CPP)**

3.9.4. All components of the GREENS shall provide quick reference instructions either printed on the unit itself, or on a waterproof, durable instruction card tethered to the unit. **This is Critical Performance Parameter (CPP)**

3.9.5. All components of the GREENS shall have controls and displays that are easy to locate and understand. **This is Critical Performance Parameter (CPP)**

3.9.6. All components of the GREENS shall provide visual indicators that are easy to read in all lighting conditions. **This is Critical Performance Parameter (CPP)**

3.9.7. If illumination is used as a method of displaying information, it is desired that the GREENS system shall have the capability to allow a user to temporarily disable all light emitting sources during black-out scenarios. Indicators should not depend on color perception to interpret.

3.9.8. All components of the GREENS shall not present major safety or health hazards while being operated, maintained or supported. **This is Critical Performance Parameter (CPP)**

3.9.9. All components of the GREENS shall conform to all current Occupational Safety and Health Administration (OSHA) and Environmental Protective Agency (EPA) requirements. **This is Critical Performance Parameter (CPP)**

3.10. Logistics, Supportability & Training

3.10.1. All components of the GREENS shall be maintenance free. **This is Critical Performance Parameter (CPP)**

3.10.2. All components of the GREENS shall be sufficiently simple to operate by reading the operator's manual, as not to warrant formal instruction.

DRAFT

3.10.3. All components of the GREENS shall require no tools to operate. **This is Critical Performance Parameter (CPP)**

3.10.4. All components of the GREENS shall not require any special tools for repair. Common tools (those readily available at a Marine Corps intermediate maintenance facility) may be required. **This is Critical Performance Parameter (CPP)**

3.10.5. The Mean Time Between Critical Failures for any GREENS system component shall be 10,000 operational hours or greater. The MTBCF excludes the batteries.

3.10.6. The GREENS shall be provided with an identification plate showing the manufacturer's model number, national stock number (if assigned), serial number, date of manufacture, CAGE code, Nomenclature, contract number (if assigned), and warranty expiration date. **This is Critical Performance Parameter (CPP)**

3.10.7. The GREENS Controller shall be provided with Item Unique Identification (IUID) that conforms to MIL-STD-130 requirements for commercial product markings and in accordance with Appendix A. **This is Critical Performance Parameter (CPP)**

4.0 PACKAGING, HANDLING, SHIPPING & TRANSPORTATION

4.1 All GREENS packaging shall be commercial ASTM D3951-98; Level of packing to be Commercial.

4.2 All systems shall be delivered Freight On-Board (FOB) destination, as called for in each delivery order.

DRAFT

APPENDIX A
UNIQUE IDENTIFICATION

These simplified UID marking requirements are designed and intended to be compliant with the Department of Defense (DoD) UID requirements as specified in the Department of Defense Guide to Uniquely Identifying Items: Assuring Valuation, Accountability and Control of Government Property, Version 1.4 April 16, 2004.

What items require UID markings?

- All items and sub-systems with a unit cost of $5,000 or more
- Serially managed, mission essential, or controlled inventory items
- Components within items if determined by the Program Manager

For the purposes of this project, the container and the RU are determined to be subject to requirement 1.b and must each have UID markings.

What information is needed to create a UID (for UII Construct #2 in the reference)?

- An enterprise ID (in this case, a manufacturer's CAGE code)
- An original part number or model number for the item
- A serial number for the particular item being marked

How is the UID marking constructed?

- The UID marking has two main elements:
- The human-readable listing of the enterprise ID (CAGE code), original part or model number, and serial number of the item being marked.
- A 2-dimensional machine-readable data matrix composed of the same information elements as listed above. The data matrix must be an ECC 200 symbol. The syntax for encoding the data matrix is ISO/IEC 15434, and ISO/IEC 15418 data identifiers are used to designate the three data elements.
- An example of UID marking appears below:

CAGE (17V) 0CVA5
Orig. Part No. (1P) 1234
Serial No. (S) 567890

This example shows the human-readable CAGE code, Original Part Number, and Serial Number listed. The items in parenthesis after each text description are the data labels corresponding to each data element. For example, the ISO/IEC 15418 data identifier for "serial number" is "S." The marking includes an ECC 200 2-dimensional data matrix containing the same data encoded in ISO/IEC 15434 syntax. Note that for this example the ECC 200 symbol used is representational only and is not accurately encoded with the example data.

DRAFT

The ISO/IEC 15434 syntax is constructed as follows:

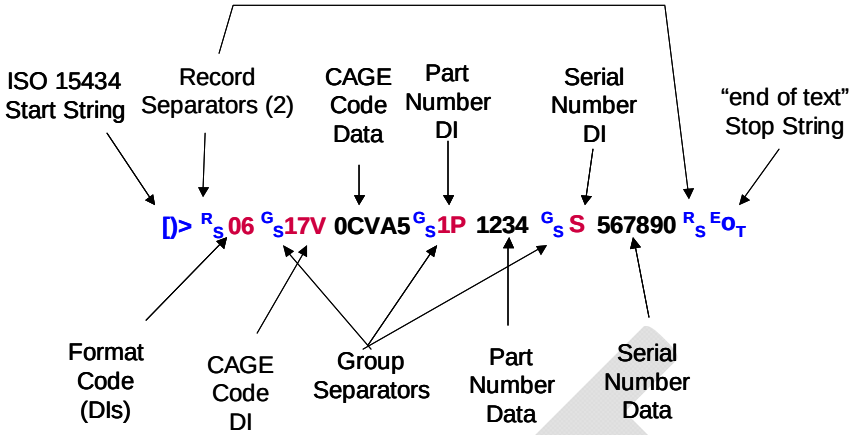

"DI" stands for "Data Identifier"

The example above shows the data elements encoded to generate the proper ECC 200 data matrix.

How are the items labeled?

- Any permanent marking conforming to the example in paragraph "How is the UID marking constructed?" above is sufficient.
- We recommend that the UID markings for each item be printed on self-adhesive labels that are placed on the existing data plate for the item being marked (the data plate should have a "blank" area for the label). A clear film can be placed over the label to enhance its durability. Though UID marking information may duplicate information on the existing data plate, it is desired that the data plate information remain complete to allow item identification if the UID marking label becomes illegible.
- An integral bar code and manual data fields on the data plate is equally acceptable
- An example appears below:

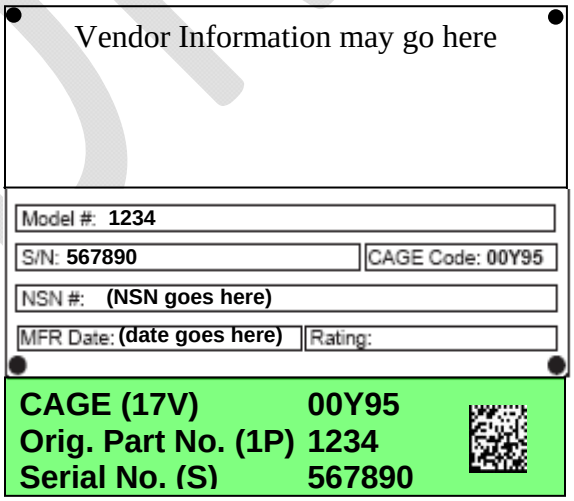

DRAFT

APPENDIX B
Output Power Distribution Cables

The diagram below graphically depicts the Output Power Distribution Cables and Adaptors. This diagram is for illustrative purposes only and should not be construed as all outputs connected in this diagram would be connected at the same time. The requirement number for each cable is listed and the diagram shows the device the cable is intended to power. Several of these requirements are for just the cable and not the end device itself. All cables leaving the power distribution box, 3.6.1.1, use the AMP 211398-2 male plug and function on 12VDC or 24VDC depending on the device. The requirements in section 3 supersede any information in Appendix B.

DRAFT