LOADING TABLES

LOAD 1				
Description	Strongback Number	Type	Reaction on loading floor (Lbs)	Footprint of Foundation
Forward	10	Strongback	322435	4 columns (20" x 20")
	9	Strongback	334161	4 columns (20" x 20")
	8	Strongback	344049	4 columns (20" x 20")
	7	Strongback	360175	4 columns (20" x 20")
	6	Strongback	373600	4 columns (20" x 20")
	5	Strongback	387550	4 columns (20" x 20")
	4	Strongback	402119	4 columns (20" x 20")
	3	Strongback	415837	4 columns (20" x 20")
	2	Strongback	435456	4 columns (20" x 20")
	1	Strongback	450404	4 columns (20" x 20")
	TOTAL LOAD		3825786	
SEE SHEET 3 FOR STRONGBACK SPACING UNDER LOAD 1, AND MOVEMENT OF LOAD 1.				

LOAD 2				
Description	Strongback Number	Type	Reaction on loading floor (Lbs)	Footprint of Foundation
	1	Strongback	221157	4 columns (20" x 20")
Forward	2	Strongback	221157	4 columns (20" x 20")
	TOTAL LOAD		442314	
SEE SHEET 4 FOR STRONGBACK SPACING UNDER LOAD 2, AND MOVEMENT OF LOAD 2.				

LOAD 3				
Description	Strongback Number	Type	Reaction on loading floor (Lbs)	Footprint of Foundation
Stablizing Strongback (See Note 4)	1	Strongback	135217	4 columns (20" x 20")
Forward	2	Strongback	435217	4 columns (20" x 20")
	TOTAL LOAD		570434	
SEE SHEET 5 FOR STRONGBACK SPACING UNDER LOAD 3, AND MOVEMENT OF LOAD 3.				

LOAD 4				
Description	Strongback Number	Type	Reaction on loading floor (Lbs)	Footprint of Foundation
	1	Strongback	379884	4 columns (20" x 20")
	2	Strongback	379884	4 columns (20" x 20")
Forward	3	Strongback	379884	4 columns (20" x 20")
	TOTAL LOAD		1139652	
SEE SHEET 6 FOR STRONGBACK SPACING UNDER LOAD 4, AND MOVEMENT OF LOAD 4.				

LOAD 5				
Description	Strongback Number	Type	Reaction on loading floor (Lbs)	Footprint of Foundation
	1	Strongback	443217	4 columns (20" x 20")
	2	Strongback	443217	4 columns (20" x 20")
Forward	3	Strongback	443217	4 columns (20" x 20")
	TOTAL LOAD		1329651	
SEE SHEET 7 FOR STRONGBACK SPACING UNDER LOAD 5, AND MOVEMENT OF LOAD 5.				

LOAD 6				
Description	Strongback Number	Type	Reaction on loading floor (Lbs)	Footprint of Foundation
	1	Strongback	477848	4 columns (20" x 20")
	2	Strongback	444432	4 columns (20" x 20")
	3	Strongback	419338	4 columns (20" x 20")
	4	Strongback	379698	4 columns (20" x 20")
	5	Strongback	348183	4 columns (20" x 20")
	6	Strongback	317209	4 columns (20" x 20")
	7	Strongback	286137	4 columns (20" x 20")
Forward	8	Strongback	258234	4 columns (20" x 20")
	TOTAL LOAD		2931079	
SEE SHEET 8 FOR STRONGBACK SPACING UNDER LOAD 6, AND MOVEMENT OF LOAD 6.				

NOTES

1. WOOD BLOCKING WILL BE APPLIED BETWEEN THE SPMT'S AND THE STRONGBACKS WITH A THICKNESS OF 3" MINIMUM AND 5" MAXIMUM IN THE CONTACT AREA NOTED IN PLAN VIEW 14-B. ALL DIMENSIONS FOR THE STRONGBACKS ARE SHOWN ON SHEET 2. THE STRONGBACKS WILL SUPPORT ALL LOADS SHOWN HEREIN. THE SPMT'S WILL MANUVERE INTO PLACE UNDER THE STRONGBACKS TO LIFT EACH RESPECTIVE LOAD.
2. ALL LOADS SHOWN HEREIN HAVE A VERTICAL CENTER OF GRAVITY OF 23' 7-1/2" ABOVE THE LOADING FLOOR. THE LOADING FLOOR IS DEFINED AS THE SUPPORT SURFACE WHICH THE SPMT'S WILL TRAVEL ON TOP OF. THE HORIZONTAL CENTER WILL BE 16' 6" FROM THE EDGE OF THE LOAD (CENTER OF LOAD).
3. ALL WEIGHTS SHOWN IN THE LOAD TABLES ON THIS SHEET CORRESPONDS TO THE WEIGHT IMPARTED ON EACH RESPECTIVE STRONGBACK, INCLUDING THE SELF-WEIGHT OF EACH RESPECTIVE STRONGBACK. THE NUMBERING SYSTEM OF EACH STRONGBACK IN THE TABLES SHOWN ON THIS PAGE CORRESPONDS TO THE NUMBERING SYSTEM SHOWN ON EACH RESPECTIVE SHEET.
4. STRONGBACK 1 USED IN LOAD 3 IS A STABILIZING STRONGBACK. IT IS NOT UNDER LOAD 3, BUT IT IS ATTACHED TO LOAD 3 TO ENSURE STABILITY OF THE MOVEMENT OF LOAD 3.

PURPOSE

1. THIS DRAWING DEPICTS 6 LOADS SUPPORTED BY STRONGBACKS (SEE SHEET 2) AND THEIR RESPECTIVE REQUIRED MOVEMENTS TO BE ACCOMPLISHED BY SELF PROPELLED MODULAR TRANSPORTS (SPMT).

REVISIONS

REV	ZONE	DESCRIPTION	ENGR	DATE	APVD

REV	ALTERATION NUMBER	WT GR TYPE	WT (LBS)	X OR XR	VCG REF BL	LCG REF MIDSHIP	F OR A	TCG REF CL	D OR W	VAL BY

WEIGHT CONTROL DATA

WEIGHT IN POUNDS TO THE NEAREST POUND
LEVERS IN FEET TO THE NEAREST TENTH OF A FOOT
USE SEPARATE LINES FOR EACH WT GR, SA, REV, WT INSTL, WT RMV
I=INSTALL R=REMOVAL XI=LOAD ITEM INSTALLED XR=LOAD ITEM REMOVED
F=FWD A=AFT P=PORT S=STBD D=CENTERLINE

SDI INFORMATION
THIS DRAWING MODIFIES NO KNOWN REFERENCE.

SSR INFORMATION
N/A

REVISION STATUS OF SHEETS

SHIP APPLICABILITY

CONTRACT No.
FSCM No.

AUTHORITY:

NORFOLK NAVAL SHIPYARD
PORTSMOUTH, VA
23709-5000

		DATE
PREPARED	SHANE DONNEY	12/12
CHECKED	WILLIAM PALAGYI	12/12
ENGINEER	N/A	N/A
APPROVED	WILLIAM PALAGYI	12/12

ACCEPTED FOR NAVSEA

APPROVED BY NAVSEA

DEPARTMENT OF THE NAVY
NAVAL SEA SYSTEMS COMMAND
WASHINGTON NAVY YARD, D.C. 20376-1010

SELF PROPELLED MODULAR TRANSPORT (SPMT) MOVEMENTS

SIZE	CAGE No.	WT GRP	NAVSEA DRAWING No.	REV
F	53711	100	7368446	-

SCALE:AS SHOWN CODE/DEPT: 276 SHEET 1 OF 8

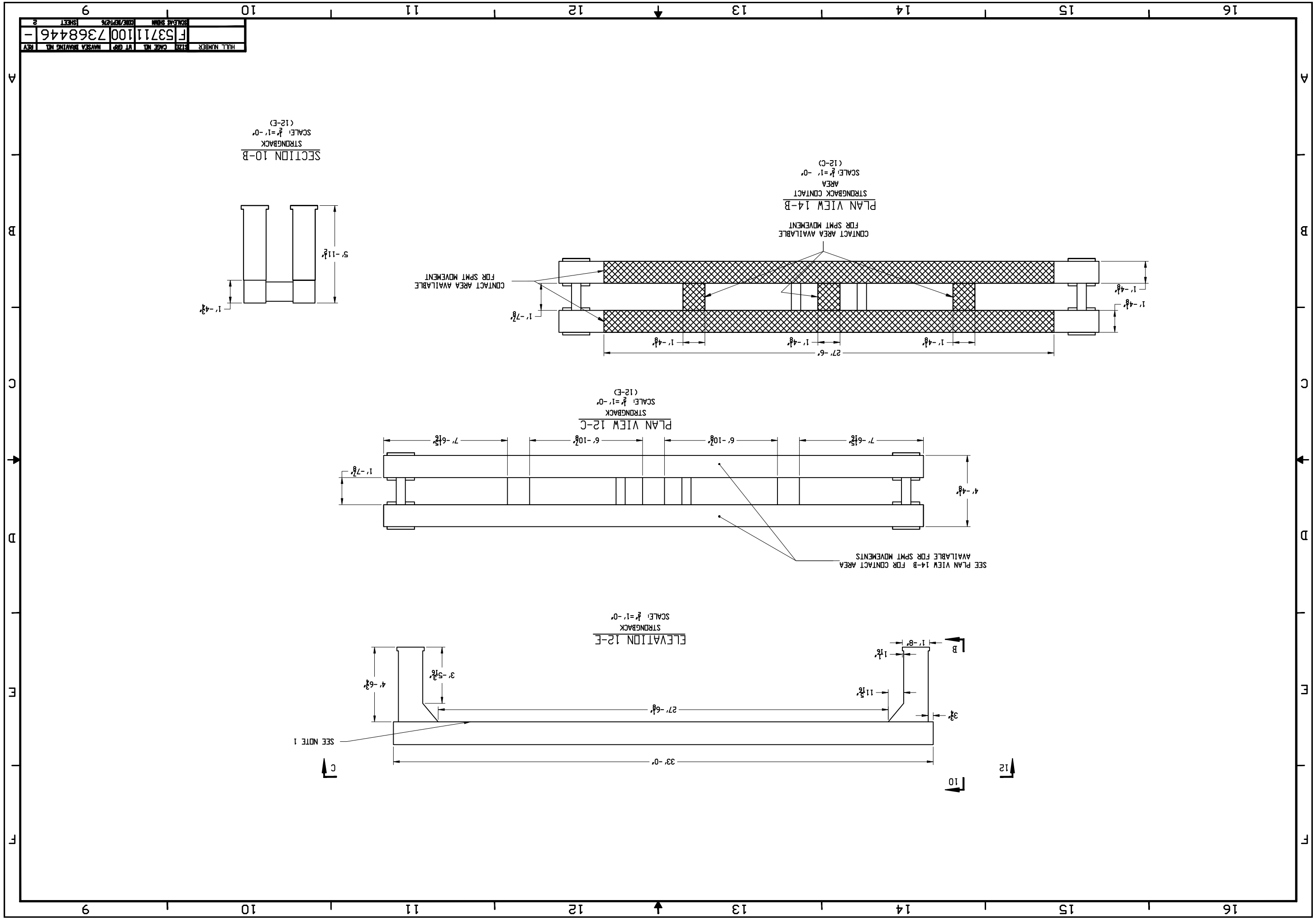

HULL NUMBER	SIZE	CAGE NO.	WT GRP	NAVSEA DRAWING NO.	REV
	F	53711	100	7368446	-

SCALE: AS SHOWN | CODE/REPT: 276 | SHEET 2

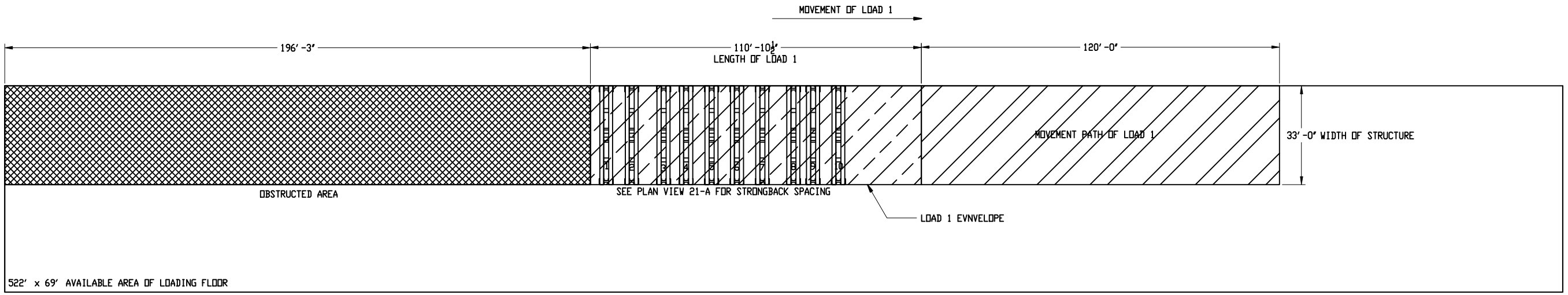

PLAN VIEW 21-D
LOADING FLOOR
& MOVEMENT OF LOAD 1
SCALE: 1:168

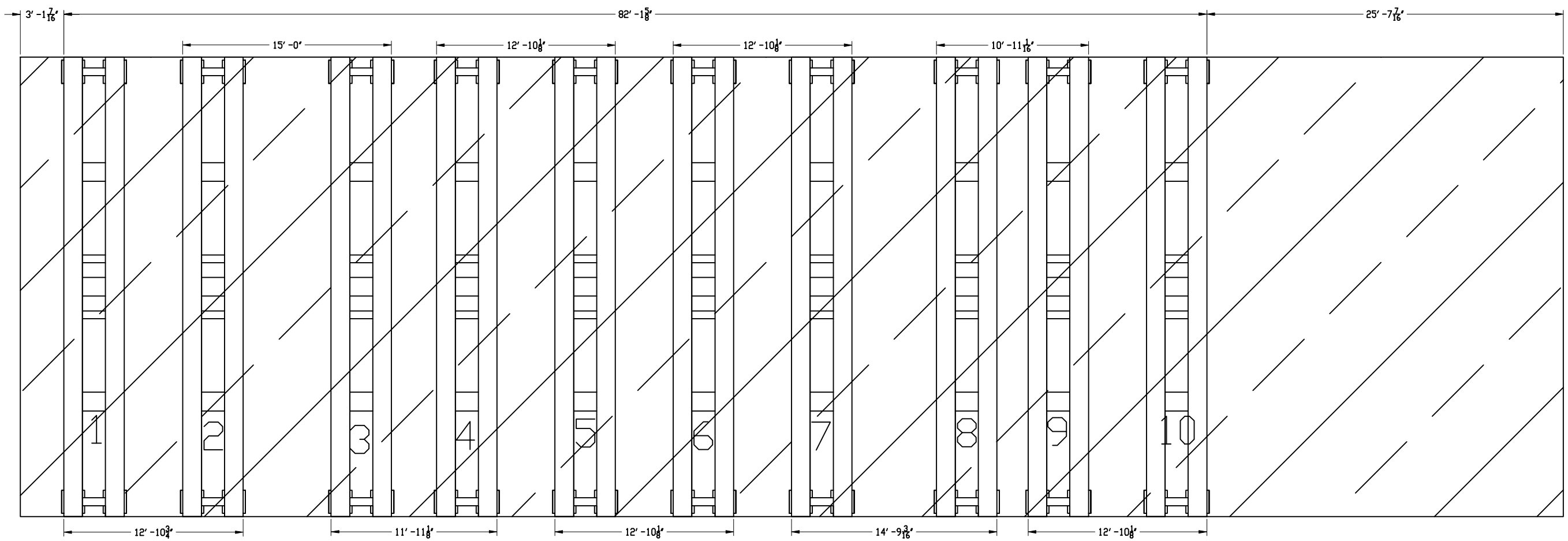

PLAN VIEW 21-A
STRONGBACK SPACING FOR LOAD 1
SCALE: X=1:36
(21-D)

HULL NUMBER	SIZE	CAGE NO.	WT GRP	NAVSEA DRAWING NO.	REV
	F	53711	100	7368446	-
	SCALE:AS SHOWN		CODE/DEPT:276	SHEET 3	

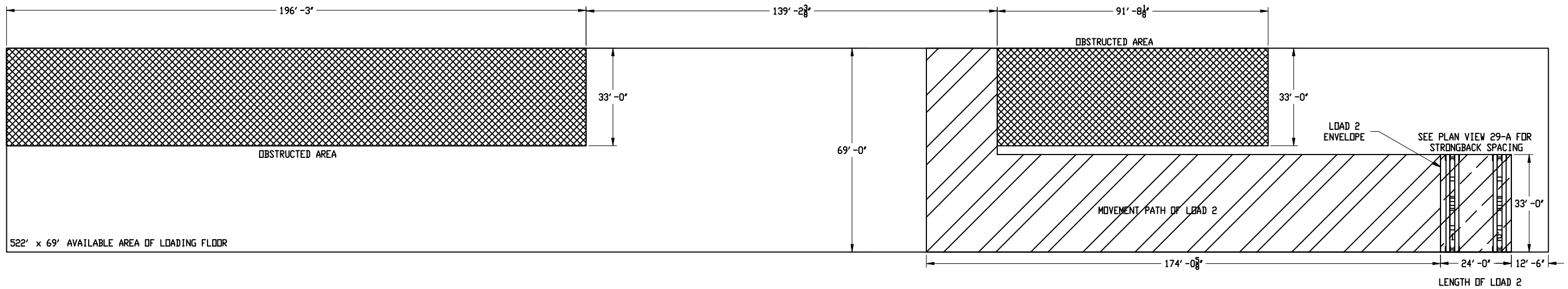

PLAN VIEW 29-D
LOADING FLOOR
& MOVEMENT OF LOAD 2
SCALE: 1:168

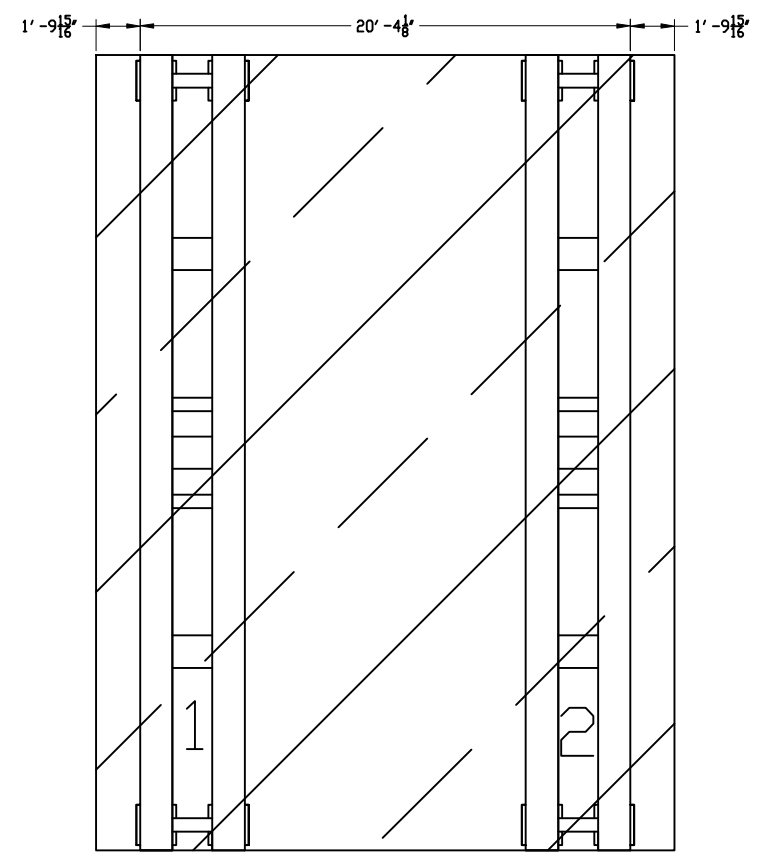

PLAN VIEW 29-A
STRONGBACK SPACING
FOR LOAD 2
SCALE: 1:36
(29-D)

HULL NUMBER	SIZE	CAGE NO.	WT GRP	NAVSEA DRAWING NO.	REV
	F	53711	100	7368446	-
	SCALE: AS SHOWN		CODE/DEPT:276	SHEET 4	

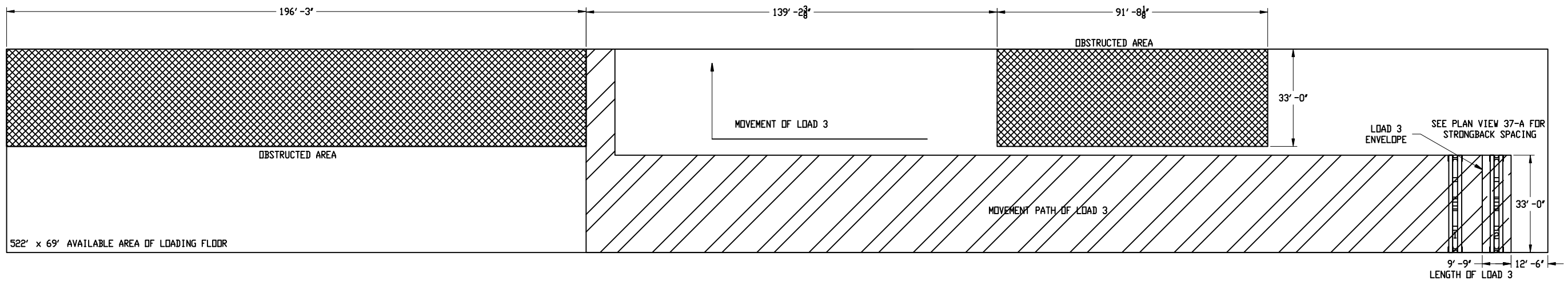

PLAN VIEW 37-D
LOADING FLOOR
& MOVEMENT OF LOAD 3
SCALE: 1:168

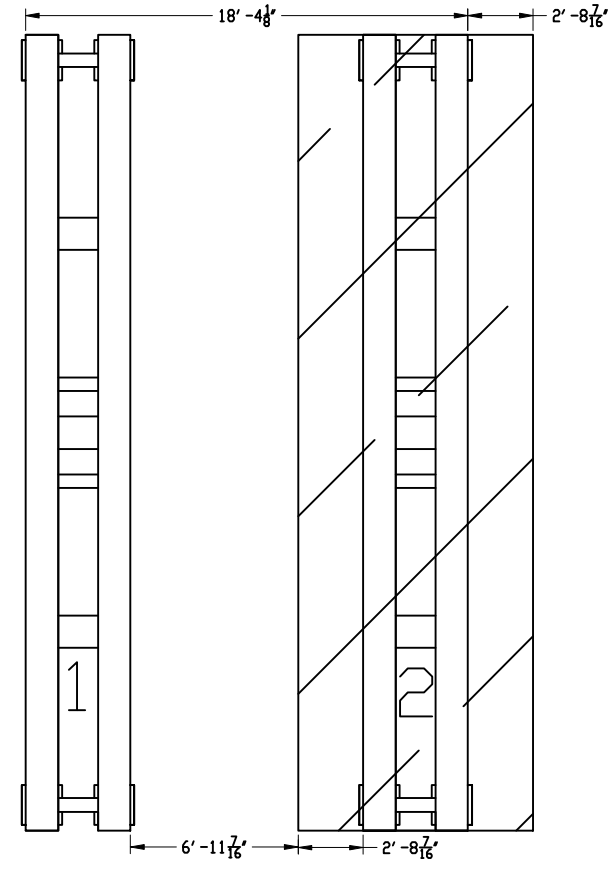

PLAN VIEW 37-A
STRONGBACK SPACING
FOR LOAD 3
SCALE: 1:36
(37-D)

HULL NUMBER	SIZE	CAGE NO.	WT GRP	NAVSEA DRAWING NO.	REV
	F	53711	100	7368446	-
	SCALE: AS SHOWN		CODE/DEPT:276	SHEET 5	

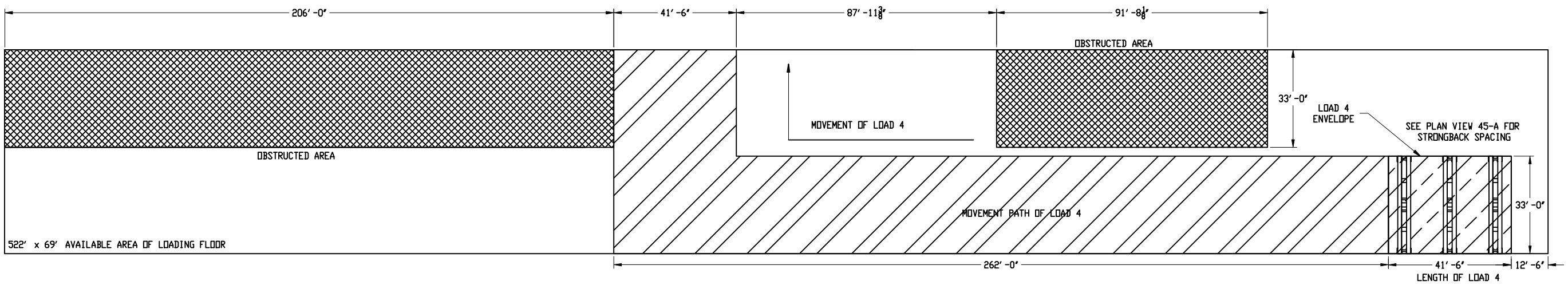

PLAN VIEW 45-D
LOADING FLOOR
& MOVEMENT OF LOAD 4
SCALE: 1:168

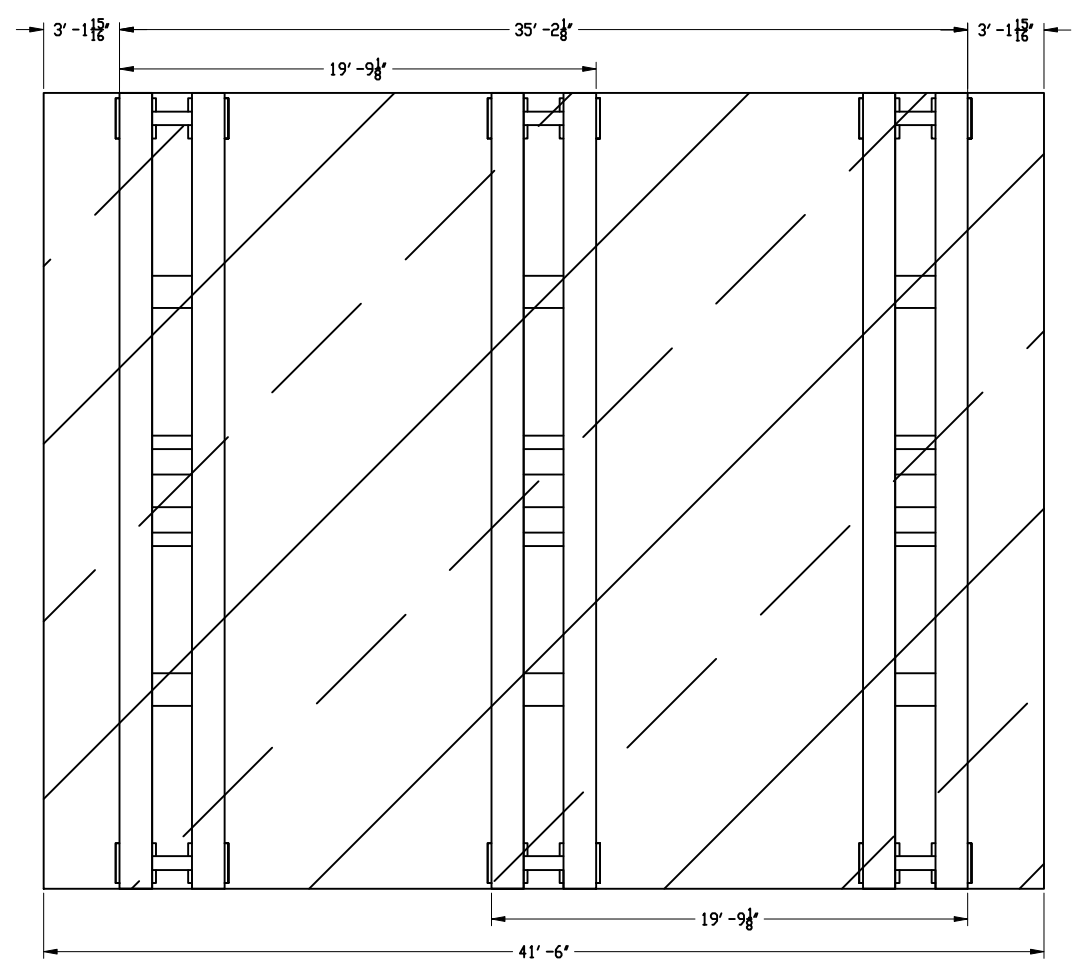

PLAN VIEW 45-A
STRONGBACK SPACING
FOR LOAD 4
SCALE: 1:36
(45-D)

HULL NUMBER	SIZE	CAGE NO.	WT GRP	NAVSEA DRAWING NO.	REV
	F	53711	100	7368446	–
	SCALE:AS SHOWN		CODE/DEPT#276	SHEET 6	

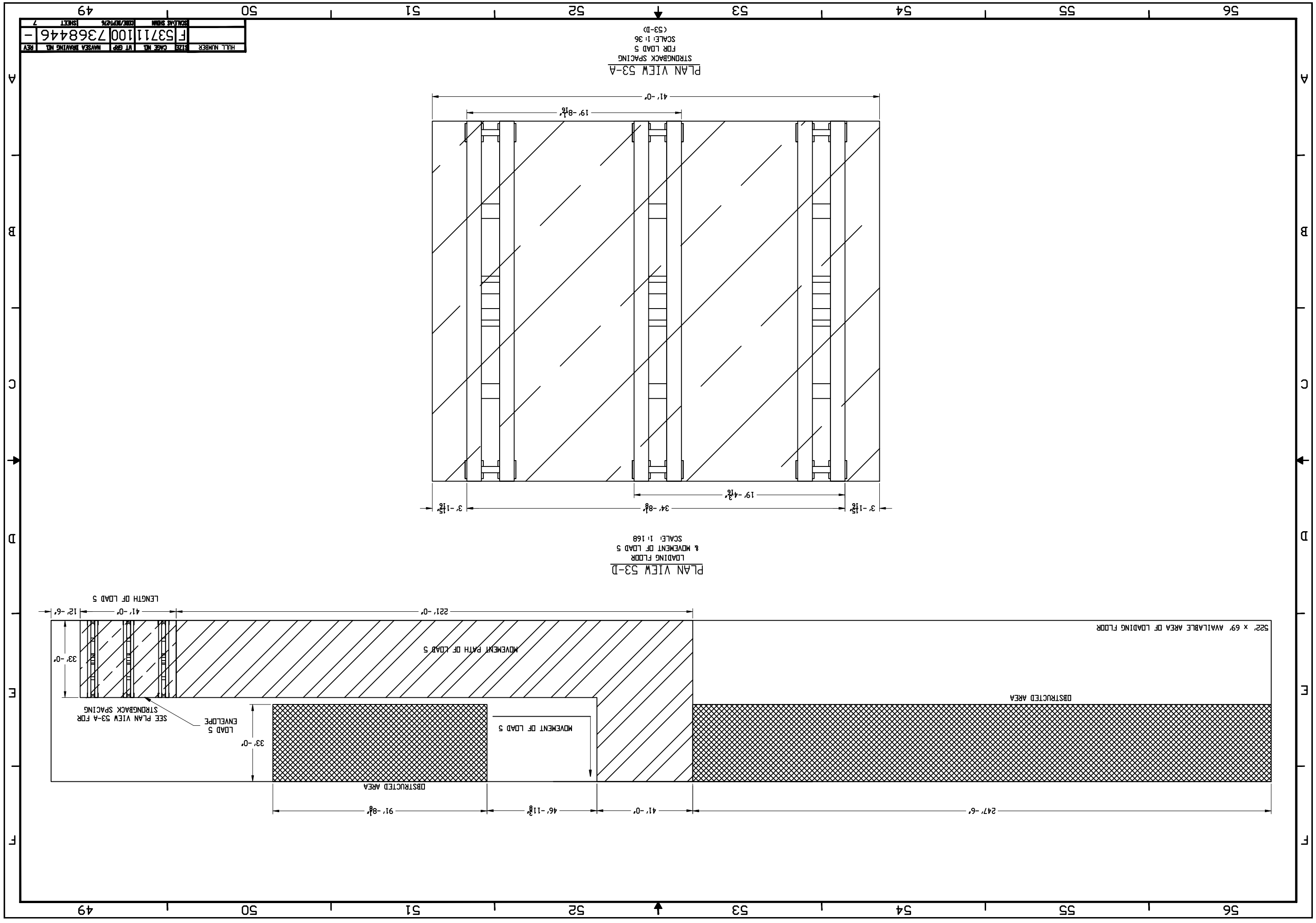
PLAN VIEW 53-A
STRONGBACK SPACING
FOR LOAD 5
SCALE: 1: 36
(53-D)
41'-0"
19'-8 1/16"
19'-4 3/16"
3'-1 15/16"
34'-8 1/8"
3'-1 15/16"
PLAN VIEW 53-D
LOADING FLOOR
& MOVEMENT OF LOAD 5
SCALE: 1: 168
LENGTH OF LOAD 5
12'-6"
41'-0"
221'-0"
33'-0"
MOVEMENT PATH OF LOAD 5
522' x 69' AVAILABLE AREA OF LOADING FLOOR
OBSTRUCTED AREA
SEE PLAN VIEW 53-A FOR
STRONGBACK SPACING
LOAD 5
ENVELOPE
33'-0"
MOVEMENT OF LOAD 5
OBSTRUCTED AREA
91'-8 1/8"
46'-11 3/8"
41'-0"
247'-6"
HULL NUMBER
SIZE
CAGE NO.
WT GRP
MAYSEA DRAWING NO.
REV
F
53711
100
7368446
-
SCALE/AS SHOWN
CODE/DEPT/276
SHEET 7

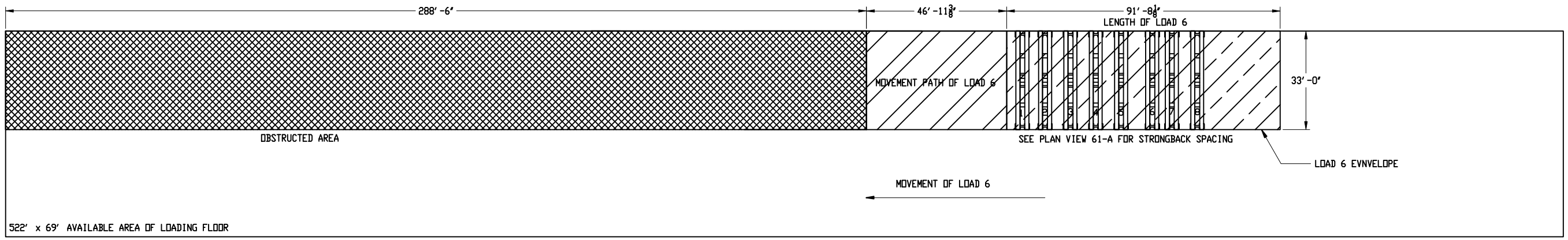

PLAN VIEW 61-D
LOADING FLOOR
& MOVEMENT OF LOAD 6
SCALE: 1:168

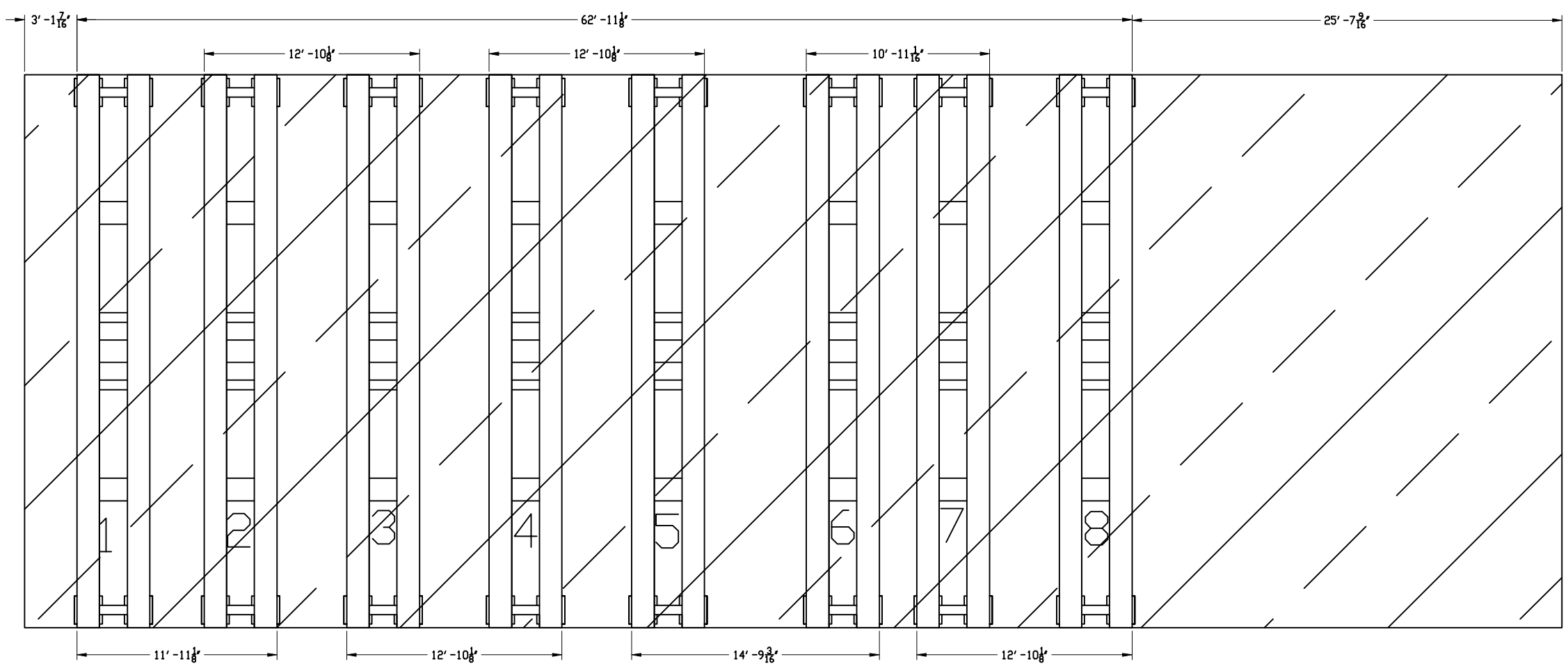

PLAN VIEW 61-A
STRONGBACK SPACING
FOR LOAD 6
SCALE: 1:36
(61-D)

HULL NUMBER	SIZE	CAGE NO.	VT GRP	NAVSEA DRAWING NO.	REV
	F	53711	100	7368446	–
	SCALE:AS SHOWN		CODE/DEPT:276	SHEET 8	