FOR PROCUREMENT: N00104-15-N-B125 - 2/2/2015

NAVAL SURFACE WARFARE CENTER
INDIAN HEAD MD 20640

APPROVED BY 20Feb98

Prepared on: 10/16/97

ECP 975220I017

DATA LIST: DL8595821 NAME: INITIATOR,CRTG,M3A2 TOP ASSEMBLY DRAWING: F8595821
FEDERAL STOCK No.: 1377-00-932-5031 DODIC: M690 DL REV: A
NOMENCLATURE: INITIATOR, CARTRIDGE ACTUATED, M3A2 ASSEMBLY

FSCM	S Z	DOCUMENT ID	REV	DOC DATE	No SH	DOCUMENT NAME	DOC SYM	R	SC	QTY	FED STK NUM	DODIC	REV	SHTS	CHG DATE	CHANGE ID
19200		TA8595821		05JUN97	000	INITIATOR,CRTG,M3A2		U	U		1377009325031	M690	A			
		Total: 1 TOP ASSEMBLY														
FSCM	S Z	DOCUMENT ID	REV	DOC DATE	No SH	DOCUMENT NAME	DOC SYM	R	SC	QTY	FED STK NUM	DODIC	REV			
19200		DL8594157		17JAN97	000	CRTG,IMPLS M73 ASSY		U	U	REF			A			
		Total: 1 NO TECHNICAL DATA, OBTAIN THEM FROM ITS FSCM*														
FSCM	S Z	DOCUMENT ID	REV	DOC DATE	No SH	DOCUMENT NAME	DOC SYM	R	SC	QTY	FED STK NUM	DODIC	REV			
81349		MIL-I-46625		31JAN90	000	INITIATOR,CRTG,M3A2		U	U		1377009325031	M690	C			
		Total: 1 PRODUCT SPECIFICATIONS														
FSCM	S Z	DOCUMENT ID	REV	DOC DATE	No SH	DOCUMENT NAME	DOC SYM	R	SC	QTY	FED STK NUM	DODIC	REV			
19200	B	DW10524102		11JAN90	001	SEAL		U	U	AR			C			
30003	C	DW834AS129		15DEC77	001	LUBRICANT,O-RING	W	U	U	AR			A			
19200	D	DW8593013		11JAN90	001	RETAINER, CARTRIDGE		U	U	AR			H			
19200	D	DW8593014		11JAN90	001	CHAMBER, INITIATOR		U	U	AR			F			
19200	D	DW8594157		14JUN90	001	CRTG,IMPLS M73 ASSY		U	U	REF			P			
19200	C	DW8594265		11JAN90	001	LABEL, IDENT		U	U	AR			G			
19200	C	DW8595403		11JAN90	001	PIN, INITIATOR		U	U	AR			F			
19200	D	DW8595404		11JAN90	001	CAP		U	U	AR			F			
19200	B	DW8595405		11JAN90	001	PIN, SAFETY		U	U	AR			E			
00000	B	DW8595406		11JAN90	001	SPRING,INITIATOR		U	U	AR			F			
19200	F	DW8595821		19MAY97	001	INITIATOR,CRTG,M3A2		U	U	AR			G			
19200	D	DW8595822		19MAY97	001	INITIATOR, MET PTS		U	U	AR			D			
19200	C	DW8596168		11JAN90	001	PIN, FIRING		U	U	AR			A			
19200	D	DW8596169		11JAN90	001	HOUSING, FIRING PIN		U	U	AR			A			

Drawing 10524102 Rev C is replaced by Rev D under authority of ECP 09E215A010DBR1.

Drawing 834AS129 Rev A is replaced by Rev B under authority of ECP 035220I020.

Drawing 8593013 Rev H is replaced by Rev J under authority of ECP 09E215A010DBR1.

Drawing 8593014 Rev F is replaced by Rev G under authority of ECP 09E215A010DBR1.

Drawing 8594157 Rev P is replaced by Rev T under authority of ECP 09E215A010DBR1.

Drawing 8594265 Rev G is replaced by Rev H under authority of ECP 09E215A010DBR1.

Drawing 8595403 Rev F is replaced by Rev G under authority of ECP 09E215A010DBR1.

Drawing 8595404 Rev F is replaced by Rev G under authority of ECP 09E215A010DBR1.

Drawing 8595405 Rev E is replaced by Rev F under authority of ECP 09E215A010DBR1.

Drawing 8595406 Rev F is replaced by Rev G under authority of ECP 09E215A010DBR1.

Drawing 8595821 Rev G is replaced by Rev H under authority of ECP 09E215A010DBR1.

Drawing 8595822 Rev D is replaced by Rev E under authority of ECP 09E215A010DBR1.

Drawing 8596168 Rev A is replaced by Rev B under authority of ECP 09E215A010DBR1.

Drawing 8596169 Rev A is replaced by Rev B under authority of ECP 09E215A010DBR1.

ECP 09E215A010DBR1 apples to specifications MIL-I-46559 and MIL-I-46625.

19203	D	DW8796541		11JAN90	001	BOX, FBRBD (INNER)		U	U	REF			H
19203	D	DW8796542		11JAN90	001	BOX, PKG AMMO		U	U	REF			G
19203	D	DW9216934		11JAN90	001	BOX, FBRBD (OUTER)		U	U	REF			C

Total: 17 DRAWING

FSCM	S Z	DOCUMENT ID	REV	DOC DATE	No SH	DOCUMENT NAME	DOC SYM	R	SC	QTY	FED STK NUM	DODIC	REV SHTS	CHG DATE	CHANGE ID
96906		DOD-STD-100			000	REPLACED BY		U	U	REF					MIL-STD-100
96906		MIL-STD-105			000	CANCELED USE		U	U	REF					ANSI-ASQC Z1.4
96906		MIL-STD-109			000	CANCELED USE		U	U	REF					ANSI-ASQCA8402
96906		MIL-STD-171			000	FINISHING		U	U	REF					
96906		MIL-STD-413			000	VISUAL INSP GUIDE		U	U	REF					
96906		MIL-STD-453			000	INSP, RADIOGRAPHIC		U	U	REF					

Total: 6 MILITARY STANDARDS (BOOK FORM)

FSCM	S Z	DOCUMENT ID	REV	DOC DATE	No SH	DOCUMENT NAME	DOC SYM	R	SC	QTY	FED STK NUM	DODIC	REV SHTS	CHG DATE	CHANGE ID
96906		MS19060			000	BALL,BEARING		U	U	REF					
96906		MS28741			000	HOSE ASSEMBLY		U	U	REF					
96906		MS28775			000	PACKING		U	U	REF					

Total: 3 MILITARY STANDARDS (DRAWING FORM)

FSCM	S Z	DOCUMENT ID	REV	DOC DATE	No SH	DOCUMENT NAME	DOC SYM	R	SC	QTY	FED STK NUM	DODIC	REV SHTS	CHG DATE	CHANGE ID
81349		MIL-A-2550			000	AMMUNITION,GEN SPEC		U	U	REF					
81349		MIL-C-16555			000	COATING,COMPOUND		U	U	REF					
81349		MIL-C-5501			000	CAP AND PLUG		U	U	REF					
81349		MIL-C-5501/11			000	CAP AND PLUG		U	U	REF					
81349		MIL-F-7190			000	FORGING,STEEL		U	U	REF					
81349		MIL-I-14802		31JAN90	000	INITIATOR,CRTG,M3A2		U	U	REF			A		
81349		MIL-I-46559		31JAN90	000	INITIATOR,MET PARTS		U	U	REF			B		
81349		MIL-P-19834			000	PLATE,IDENT		U	U	REF					
81349		MIL-S-5000			000	STEEL		U	U	REF					
81349		MIL-S-5626			000	STEEL,CR MOLY		U	U	REF					
81349		MIL-S-6049			000	STEEL,CR-NKL-MOLY		U	U	REF					
81349		MIL-S-6758			000	STEEL,CR MOLY		U	U	REF					
81349		MIL-V-173			000	VARNISH		U	U	REF					

Total: 13 MILITARY SPECIFICATIONS

FSCM	S Z	DOCUMENT ID	REV	DOC DATE	No SH	DOCUMENT NAME	DOC SYM	R	SC	QTY	FED STK NUM	DODIC	REV SHTS	CHG DATE	CHANGE ID
06542		FED-STD-595			000	COLORS		U	U	REF					
		Total: 1 FEDERAL STANDARDS													

FSCM	S Z	DOCUMENT ID	REV	DOC DATE	No SH	DOCUMENT NAME	DOC SYM	R	SC	QTY	FED STK NUM	DODIC	REV SHTS	CHG DATE	CHANGE ID
81348		QQ-W-470			000	WIRE		U	U	REF					
81348		ZZ-R-765			000	RUBBER		U	U	REF					
		Total: 2 FEDERAL SPECIFICATION													

FSCM	S Z	DOCUMENT ID	REV	DOC DATE	No SH	DOCUMENT NAME	DOC SYM	R	SC	QTY	FED STK NUM	DODIC	REV SHTS	CHG DATE	CHANGE ID
00000		TPO-00-932-5031			000	INITIATOR,CRTG,M3A2		U	U	REF					
		Total: 1 OTHER STANDARDS AND SPECIFICATIONS													

TOTAL Documents: 46

Legend:

---------- Symbols in Column: DOC SYM ----------
A = ALTERED ITEM DWG
C = SPEC CONTROL DWG
E = GAGE & TEST EQPT DWG
F = INTFC CONTROL DWG
I = PRODUCTION TOOLING DWG
L = SEL ITEM DWG
Q = SQAP DATA ON DWG
S = SOURCE CONT DWG
W = WR43A ON DWG

----------Symbols in Column: R ----------
L = LIMITED RIGHTS
U = UNLIMITED RIGHTS

--Symbols in SC (Security Classification)--
C = CONFIDENTIAL
S = SECRET
U = UNCLASSIFIED
T = TOP SECRET

REF in QTY column indicates drawings not required to define, procure or inspect the end item.
AR in QTY column indicates Qty As Required.

The drawing changes from this ECP have been completed and new drawings are included in this TDP.

ENGINEERING CHANGE PROPOSAL (ECP), PAGE 1

1. DATE (YYMMDD): 100305

Form Approved
OMB No. 0704-0188

Public reporting burden for this collection of information is estimated to average 2 hours per response, including the time for reviewing instructions, searching existing data sources, gathering and maintaining the data needed, and completing and reviewing the collection of information. Send comments regarding this burden estimate or any other aspect of this collection of information, including suggestions for reducing this burden, to Department of Defense, Washington Headquarters Services, Directorate for Information Operations and Reports, 1215 Jefferson Davis Highway, Suite 1204, Arlington, VA 22202-4302, and to the Office of Management and Budget, Paperwork Reduction Project (0704-0188), Washington, DC 20503.

PLEASE DO NOT RETURN YOUR COMPLETED FORM TO EITHER OF THESE ADDRESSES. RETURN COMPLETED FORM TO THE GOVERNMENT ISSUING CONTRACTING OFFICER FOR THE CONTRACT/ PROCURING ACTIVITY NUMBER LISTED IN ITEM 2 OF THIS FORM.

2. PROCURING ACTIVITY NO.: N00104

3. DODAAC: N00174

4. ORIGINATOR
a. TYPED NAME (First, Middle Initial, Last): Christopher J. Pennington
b. ADDRESS (Street, City, State, Zip Code): IHDIV, NSWC – CAD/PAD Dept (BLDG 1557)
4393 BENSON ROAD, SUITE 120
INDIAN HEAD, MARYLAND, 20640- 5092

5. CLASS OF ECP: II

6. JUST. CODE: D

7. PRIORITY: R

8. ECP DESIGNATION
a. MODEL/TYPE: M3A2
b. CAGE CODE: 14083
c. SYSTEM DESIGNATION: Initiator
d. ECP NO.: 09E215A010DB
e. TYPE: F
f. REV: R1

9. BASELINE AFFECTED
[ ] FUNCTIONAL
[ ] ALLOCATED
[X] PRODUCT

10. OTHER SYS. / CONFIG. ITEMS AFFECTED
[ ] YES
[X] NO

11. SPECIFICATIONS AFFECTED

	CAGE Code	Specification/Document No.	Rev.	SCN
a. SYSTEM		MIL-I-46625	C	
b. DEVELOPMENT		MIL-I-46559	B	
c. PRODUCT				

12. DRAWINGS AFFECTED

CAGE Code	Number	Rev.	NOR
19200	8595821	G	
	And all subcomponents		

13. TITLE OF CHANGE
M3A2 Initiator TDP update

14. CONTRACT NO. AND LINE ITEM
Current contract N00104-09-C-K094, and all future until the TDP update is complete.

15. PROCURING CONTRACTING OFFICER
a. NAME (First, Middle Initial, Last): Donna Wood
b. CODE: E21DW
c. TELEPHONE NO.: X2211

16. CONFIGURATION ITEM NOMENCLATURE
Initiator, Cartridge Actuated, M3A2 (M690)

17. IN PRODUCTION
[ ] YES
[X] NO

18. ALL LOWER LEVEL ITEMS AFFECTED
a. NOMENCLATURE: Initiator, Cartridge Actuated, M3A2 (M690)
b. PART NO.: 8595821
c. NSN: 1377-00-932-5031

19. DESCRIPTION OF CHANGE
Incorporate all the changes from deviation # FY08-D030 with the exception of the R1 change below.

R1 Change – For drawing 8595405, DO NOT add the sentence "Hardness requirement RHC 44-48" to Note 2.

20. NEED FOR CHANGE
Changes previously implemented in repeated deviations, see for example deviations # FY08-D030, and FY07-D042.

R1 Change- The hardness requirement is redundant and conflicting with specification ASTM A 228/A 228M. ASTM A 228/A 228M calls out tensile strength of 282 to 312 ksi for 0.800 in. dia. Wire.

21. PRODUCTION EFFECTIVITY BY SERIAL NUMBER: N/A

22. EFFECT ON PRODUCTION DELIVERY SCHEDULE: N/A

23. RETROFIT
a. RECOMMENDED ITEM EFFECTIVITY: N/A
b. SHIP / VEHICLE CLASS AFFECTED: N/A
c. ESTIMATED KIT DELIVERY SCHEDULE: N/A
d. LOCATIONS OR SHIP / VEHICLE NUMBERS AFFECTED: N/A

24. ESTIMATED COSTS / SAVINGS UNDER CONTRACT: N/A

25. ESTIMATED NET TOTAL COSTS / SAVINGS: N/A

26. SUBMITTING ACTIVITY
a. AUTHORIZED SIGNATURE: Michael R. Hogg
b. TITLE: CAD Configuration Manager

27. APPROVAL / DISAPPROVAL
a. CLASS I: [ ] APPROVAL RECOMMENDED [ ] DISAPPROVAL RECOMMENDED
b. CLASS II: [ ] APPROVED [ ] DISAPPROVED
c. CLASS II: [ ] CONCUR IN CLASSIFICATION OF CHANGE [ ] DO NOT CONCUR IN CLASSIFICATION OF CHANGE
d. GOVERNMENT ACTIVITY: IHDIV NAVSURFWARCEN, Indian Head, MD 20640-5092
e. SIGNATURE:
f. DATE SIGNED (YYMMDD):
g. APPROVAL: [X] APPROVAL [ ] DISAPPROVAL
h. GOVERNMENT ACTIVITY: IHDIV NAVSURFWARCEN, Indian Head, MD 20640-5092
i. SIGNATURE: Phillip R. Sturgill
j. DATE SIGNED (YYMMDD): 100310

DD Form 1692, APR 92

Previous editions are obsolete

ECP 09E215A010DBR1

E215P E215 E21 E215N Last

REQUEST FOR DEVIATION / WAIVER (RFD/RFW)

1. DATE (YYMMDD): 080225

Form Approved OMB No. 0704-0188

Public reporting burden for this collection of information is estimated to average 2 hours per response, including the time for reviewing instructions, searching existing data sources, gathering and maintaining the data needed, and completing and reviewing the collection of information. Send comments regarding this burden estimate or any other aspect of this collection of information, including suggestions for reducing this burden, to Department of Defense, Washington Headquarters Services, Directorate for information Operations and Reports, 1215 Jefferson Davis Highway, Suite 1204, Arlington, VA 22202-4302, and to the Office of Management and Budget, Paperwork Reduction Project (0704-0188), Washington, DC 20503.

PLEASE DO NOT RETURN YOUR COMPLETED FORM TO EITHER OF THESE ADDRESSES. RETURN COMPLETED FORM TO THE GOVERNMENT ISSUING CONTRACTING OFFICER FOR THE CONTRACT/ PROCURING ACTIVITY NUMBER LISTED IN ITEM 2 OF THIS FORM.

2. PROCURING ACTIVITY NO.: N00104

3. DODAAC: N00174

4. ORIGINATOR
a. TYPED NAME (First, Middle Initial, Last): Christopher J. Pennington
b. ADDRESS (Street, City, State, Zip Code): IHDIV, NSWC – CAD/PAD Department (BLDG 1557), 4393 BENSON ROAD, SUITE 120, Indian Head, MD 20640-5092

5. (X ONE): [X] DEVIATION [ ] WAIVER

6. (X ONE): [ ] MAJOR [ ] CRITICAL [X] MINOR

7. DESIGNATION FOR DEVIATION / WAIVER

a. MODEL/TYPE	b. CAGE CODE	c. SYS. DESIG.	d. DEV/WAIVER NO.
M3A2	14083	Initiator	FY08-D030

8. BASELINE AFFECTED: [ ] FUNCTIONAL [ ] ALLOCATED [X] PRODUCT

9. OTHER SYSTEM/ CONFIGURATION ITEMS AFFECTED: [X] YES [ ] NO

10. TITLE OF DEVIATION / WAIVER
M3A2 Initiator TDP update

11. CONTRACT NO. AND LINE ITEM
PR N0010408NB133

12. PROCURING CONTRACTING OFFICER
a. NAME (First, Middle Initial, Last): Kim Bowie
b. CODE: E221B
c. TELEPHONE NO.: X2219

13. CONFIGURATION ITEM NOMENCLATURE
Initiator,Cartridge Actuated, M3A2 (M690)

14. CLASSIFICATION OF DEFECT
a. CD NO.:
b. DEFECT NO.:
c. DEFECT CLASSIFICATION: [ ] MINOR [ ] MAJOR [ ] CRITICAL

15. NAME OF LOWEST PART / ASSEMBLY AFFECTED:

16. PART NO. OR TYPE DESIGNATION:

17. EFFECTIVITY
PR N0010408NB133

18. RECURRING DEVIATION / WAIVER: [ ] YES [ ] NO

19. EFFECT ON COST / PRICE
None

20. EFFECT ON DELIVERY SCHEDULE
None

21. EFFECT ON INTEGRATED LOGISTICS SUPPORT, INTERFACE OR SOFTWARE
None

22. DESCRIPTION OF DEVIATION / WAIVER
See Continuation Sheet

23. NEED FOR DEVIATION / WAIVER
To update TDP.
Replace outdated specifications.

24. CORRECTIVE ACTION TAKEN
An ECP will be generated to permanently change drawing package.
ECP submitted 3/12/08 to update specifications.

25. SUBMITTING ACTIVITY
a. TYPED NAME (First, Middle Initial, Last): Christopher J. Pennington
b. TITLE: Engineer
c. SIGNATURE: C.J. Pennington

26. APPROVAL / DISAPPROVAL
a. RECOMMENDED [X] APPROVAL [ ] DISAPPROVAL
b. APPROVAL [X] APPROVED [ ] DISAPPROVED
c. GOVERNMENT ACTIVITY: IHDIV – NAVSURFWARCEN, Indian Head MD 20640-5092
d. TYPED NAME (First, Middle Initial, Last): Jose M. Gutierrez
e. SIGNATURE: Manager, CAD In-Service Engineering Branch
f. DATE SIGNED (YYMMDD): 080318
g. APPROVAL [X] APPROVED [ ] DISAPPROVED
h. GOVERNMENT ACTIVITY: IHDIV – NAVSURFWARCEN, Indian Head MD 20640-5092
i. TYPED NAME (First, Middle Initial, Last): Philip Sturgill
j. SIGNATURE: Director, CAD/PAD Engineering Division
k. DATE SIGNED (YYMMDD): 080325

DD Form 1694, APR 92 — Previous editions are obsolete

FOR PROCUREMENT: N00104-15-N-B125 - 2/2/2015

ECP 09E215A010DBR1

Drawing changes completed.

RFD FY08-D030
M3A2 Initiator TDP update

22. Description of Deviation, Continuation

Initiator, Cartridge Actuated, M3A2 Assembly: Drawings:

Drawing 19200-10524102 Rev C, Seal:

Note 2: Delete: "Class Ib Grade 50 Spec ZZ-R-765" and substitute: "Class 1B, Grade 50, per A-A-59588."

Add "Note 5. - Refer to MIL-I-46559 paragraph 4.5.2.9 or MIL-I-14802 paragraph 4.3.2.15 for Critical and Major Characteristics."

Drawing 19200-8593013 Rev H, Retainer, Cartridge:

Note 2: Delete: "MIL-S-5626" and substitute: "SAE-AMS-S-5626,"
Delete: "MIL-S-6758" and substitute: "SAE-AMS-S-6758,"
Delete: "MIL-S-5000" and substitute: "SAE-AMS-S-5000,"
Delete: "Alloy Steel, 8740-Spec MIL-S-6049"
Add: "Hardness requirement RHC 26-35, Physical Condition: Hardened and tempered, Surface Condition: Turned and polished."

Note 4: Add: "Within four hours after plating, part shall be heated to 375 + / - 25F for eight hours minimum."

Add "Note 7. - Quality Requirements: The product as received by the purchaser shall be uniform in quality and condition, sound, free from all detrimental imperfections. Rolling defects like seams, laps, cracks and tears should not be present after removal of adequate material from stock. Only steels, conforming to aircraft quality materials per AMS 2301, with a maximum average frequency (F) of 0.34 and an average severity (S) rating of 0.25 shall be used. Finished surface shall be free of any tool marks or other defects."

Add "Note 8. - Refer to MIL-I-46559 paragraph 4.5.2.1 or MIL-I-14802 paragraph 4.3.2.6 for Critical and Major Characteristics."

Physical Properties: Delete: "RH C26-35" (Moved to Note 2.)

Drawing 19200-8593014 Rev F, Chamber, Initiator:

Note 2: Delete: "MIL-S-5626" and substitute: "SAE-AMS-S-5626,"
Delete: "MIL-S-6758" and substitute: "SAE-AMS-S-6758,"
Delete: "MIL-S-5000" and substitute: "SAE-AMS-S-5000,"
Delete: "Alloy Steel, 8740-Spec MIL-S-6049"
Add: "Hardness requirement RHC 33-38, Physical Condition: Hardened and tempered, Surface Condition: Turned and polished."

FOR PROCUREMENT: N00104-15-N-B125 - 2/2/2015

ECP 09E215A010DBR1

Drawing changes completed.

Note 4: Add: "Within four hours after plating, part shall be heated to 375 + / - 25F for eight hours minimum."

Add "Note 7. - Quality Requirements: The product as received by the purchaser shall be uniform in quality and condition, sound, free from all detrimental imperfections. Rolling defects like seams, laps, cracks and tears should not be present after removal of adequate material from stock. Only steels, conforming to aircraft quality materials per AMS 2301, with a maximum average frequency (F) of 0.34 and an average severity (S) rating of 0.25 shall be used. Finished surface shall be free of any tool marks or other defects."

Add "Note 8. - Refer to MIL-I-46559 paragraph 4.5.2.2 or MIL-I-14802 paragraph 4.3.2.7 for Critical and Major Characteristics."

Physical Properties: Delete: "RH C33-38" (Moved to Note 2.)

Drawing 19200-8594265 Rev G, Label, Identification:

Note 2: Delete: "MIL-P-19834" and substitute: "MIL-DTL-19834"

On Label, after "NSN 1377-00-932-5031" Add: "(M690)"

On Label, Delete: "ASSEMBLY DATE MO YR"

On Label, Delete: "DATE INSTL IN A/C MO YR"

Delete dimensions: "5/16" (2 pl), "15/64", and 7/16"

Justification: Fleet does not use these two lines. Assembly date is determined from lot number, and installed date is maintained in log books.

Drawing 19200-8595403 Rev F, Pin, Initiator:

Note 2: Delete: "MIL-S-5626" and substitute: "SAE-AMS-S-5626,"
Delete: "MIL-S-6758" and substitute: "SAE-AMS-S-6758,"
Delete: "MIL-S-5000" and substitute: "SAE-AMS-S-5000,"
Delete: "Alloy Steel, 8740-Spec MIL-S-6049"
Add: "Hardness requirement RHC 38-42, Physical Condition: Hardened and tempered, Surface Condition: Turned and polished."

Note 4: Delete: "Within 10 hours after plating, part shall be heated to 350 + 50F for 3 hours min." and substitute: "Within four hours after plating, part shall be heated to 375 + / - 25F for eight hours minimum."

Add "Note 7. - Quality Requirements: The product as received by the purchaser shall be uniform in quality and condition, sound, free from all detrimental

FOR PROCUREMENT: N00104-15-N-B125 - 2/2/2015

ECP 09E215A010DBR1

Drawing changes completed.

imperfections. Rolling defects like seams, laps, cracks and tears should not be present after removal of adequate material from stock. Only steels, conforming to aircraft quality materials per AMS 2301, with a maximum average frequency (F) of 0.34 and an average severity (S) rating of 0.25 shall be used. Finished surface shall be free of any tool marks or other defects."

Add "Note 8. - Refer to MIL-I-46559 paragraph 4.5.2.3 or MIL-I-14802 paragraph 4.3.2.4 for Critical and Major Characteristics."

Physical Properties: Delete: "RH C38-42" (Moved to Note 2.)

Drawing 19200-8595404 Rev F, Cap:

Note 2: Delete: "MIL-S-5626" and substitute: "SAE-AMS-S-5626,"
Delete: "MIL-S-6758" and substitute: "SAE-AMS-S-6758,"
Delete: "MIL-S-5000" and substitute: "SAE-AMS-S-5000,"
Delete: "Alloy Steel, 8740-Spec MIL-S-6049,"
Delete: "MIL-F-7190" and substitute: "SAE-AMS-F-7190,"
Add: "Hardness requirement RHC 30-40, Physical Condition: Hardened and tempered, Surface Condition: Turned and polished."

Note 4: Delete: "Within 10 hours after plating, part shall be heated to 350 + 50F for 3 hours min." and substitute: "Within four hours after plating, part shall be heated to 375 + / - 25F for eight hours minimum."

Add "Note 10. - Quality Requirements: The product as received by the purchaser shall be uniform in quality and condition, sound, free from all detrimental imperfections. Rolling defects like seams, laps, cracks and tears should not be present after removal of adequate material from stock. Only steels, conforming to aircraft quality materials per AMS 2301, with a maximum average frequency (F) of 0.34 and an average severity (S) rating of 0.25 shall be used. Finished surface shall be free of any tool marks or other defects."

Add "Note 11. - Refer to MIL-I-46559 paragraph 4.5.2.4 or MIL-I-14802 paragraph 4.3.2.5 for Critical and Major Characteristics."

Physical Properties: Delete: "RH C30-40" (Moved to Note 2.)

Drawing 00000-8595405 Rev E, Pin, Safety:

Note 2: Delete: "QQ-W-470" and substitute: "ASTM A 228/A 228M,"

R1 Change ~~Add: "Hardness requirement RHC 44-48."~~

Note 3: Delete: "Within 10 hours after plating, part shall be heated to 350 + 50F for 3 hours min." and substitute: "Within four hours after plating, part shall be heated to 375 + / - 25F for eight hours minimum."

FOR PROCUREMENT: N00104-15-N-B125 - 2/2/2015

ECP 09E215A010DBR1

Drawing changes completed.

Add "Note 4. - Refer to MIL-I-46559 paragraph 4.5.2.5 or MIL-I-14802 paragraph 4.3.2.13 for Critical and Major Characteristics."

Physical Properties: Delete: "RH C44-48" (Moved to Note 2.)

Drawing 00000-8595406 Rev F, Spring, Initiator:

Note 2: Delete: "QQ-W-470" and substitute: "ASTM A 228/A 228M,"

Note 3: Delete: "Within 10 hours after plating, part shall be heated to 350 + 50F for 3 hours min." and substitute: "Within four hours after plating, part shall be heated to 375 + / - 25F for eight hours minimum."

Add "Note 4. - Refer to MIL-I-46559 paragraph 4.5.2.6 or MIL-I-14802 paragraph 4.3.2.14 for Critical and Major Characteristics."

Drawing 19200-8595821 Rev G, Initiator, Cartridge Actuated, M3A2 Assembly:

Delete: "MIL-P-19834" and substitute: "MIL-DTL-19834."

Delete: "INSERT MONTH AND YEAR ITEM IS ASSENBLED, SEE NOTE – 2" in its entirety.

Drawing 19200-8595822 Rev D, Initiator, Cartridge Actuated, Metal Parts Assembly:

Delete: "MIL-C-5501/11-F4" and substitute: "NAS832-4."

Drawing 19200-8596168 Rev A, Pin, Firing:

Note 2: Delete: "MIL-S-5626" and substitute: "SAE-AMS-S-5626,"
Delete: "MIL-S-6758" and substitute: "SAE-AMS-S-6758,"
Delete: "MIL-S-5000" and substitute: "SAE-AMS-S-5000,"
Delete: "Alloy Steel, 8740-Spec MIL-S-6049"
Add: "Hardness requirement RHC 38-42, Hardened and tempered, Surface Condition: Turned and polished."

Note 4: Delete: "Within 10 hours after plating, part shall be heated to 350 + 50F for 3 hours min." and substitute: "Within four hours after plating, part shall be heated to 375 + / - 25F for eight hours minimum."

Add "Note 5. - Quality Requirements: The product as received by the purchaser shall be uniform in quality and condition, sound, free from all detrimental imperfections. Rolling defects like seams, laps, cracks and tears should not be present after removal of adequate material from stock. Only steels, conforming to aircraft quality materials per AMS 2301, with a maximum average frequency (F)

FOR PROCUREMENT: N00104-15-N-B125 - 2/2/2015

ECP 09E215A010DBR1

Drawing changes completed.

of 0.34 and an average severity (S) rating of 0.25 shall be used. Finished surface shall be free of any tool marks or other defects."

Add "Note 6. - Refer to MIL-I-46559 paragraph 4.5.2.7 or MIL-I-14802 paragraph 4.3.2.3 for Critical and Major Characteristics."

Physical Properties: Delete: "RH C38-42" (Moved to Note 2.)

Drawing 19200-8596169 Rev A, Housing, Firing Pin:

Note 2: Delete: "MIL-S-5626" and substitute: "SAE-AMS-S-5626,"
Delete: "MIL-S-6758" and substitute: "SAE-AMS-S-6758,"
Delete: "MIL-S-5000" and substitute: "SAE-AMS-S-5000,"
Delete: "Alloy Steel, 8740-Spec MIL-S-6049"
Add: "Hardness requirement RHC 33-38, Physical Condition: Hardened and tempered, Surface Condition: Turned and polished."

Note 5: Add: "Within four hours after plating, part shall be heated to 375 + / - 25F for eight hours minimum."

Add "Note 9. - Quality Requirements: The product as received by the purchaser shall be uniform in quality and condition, sound, free from all detrimental imperfections. Rolling defects like seams, laps, cracks and tears should not be present after removal of adequate material from stock. Only steels, conforming to aircraft quality materials per AMS 2301, with a maximum average frequency (F) of 0.34 and an average severity (S) rating of 0.25 shall be used. Finished surface shall be free of any tool marks or other defects."

Add "Note 10. - Refer to MIL-I-46559 paragraph 4.5.2.8 or MIL-I-14802 paragraph 4.3.2.2 for Critical and Major Characteristics."

Physical Properties: Delete: "RH C33-38" (Moved to Note 2.)

Initiator, Cartridge Actuated, M3A2 Assembly: Specifications:

Military Specification MIL-I-46559B Initiator, Cartridge Actuated, M3A2, Metal Parts Assembly, dated 31 January 1990:

Paragraph 2.1.1 Standards, Military:

Delete: "MIL-STD-105" and substitute: "ANSI/ASQ Z1.4"

Delete: "MIL-STD-109" and substitute: "ANSI/ISO/ASQ A8402"

FOR PROCUREMENT: N00104-15-N-B125 - 2/2/2015

ECP 09E215A010DBR1

Paragraph 2.1.2 Other Government documents, drawings, and Publications:

U.S. Air Force: Delete: "TPO 00-932-5031 Initiator, Cartridge Actuated, M3A2" and substitute: "TPO F00-138-3770 Initiators"

Paragraph 4.1.2 Quality assurance terms and definitions:

Delete: "MIL-STD-109" and substitute: "ANSI/ISO/ASQ A8402"

Paragraph 4.5.1.1 Submission of product:

Delete: "MIL-STD-105" and substitute: "ANSI/ASQ Z1.4"

Paragraph 5.2 Air Force packaging:

Delete: "TPO 00-932-5031" and substitute: "TPO F00-138-3770"

Military Specification MIL-I-46625C Initiator, Cartridge Actuated, M3A2, Assembly, dated 31 January 1990:

Paragraph 2.1.1 Standards, Military:

Delete: "MIL-STD-105" and substitute: "ANSI/ASQ Z1.4"

Delete: "MIL-STD-109" and substitute: "ANSI/ISO/ASQ A8402"

Delete: "MIL-STD-453" and substitute: "ASTM E 1742"

Paragraph 2.1.2 Other Government documents, drawings, and Publications:

U.S. Air Force: Delete: "TPO 00-932-5031 Initiator, Cartridge Actuated, M3A2" and substitute: "TPO F00-138-3770 Initiators"

Paragraph 4.1.2 Quality assurance terms and definitions:

Delete: "MIL-STD-109" and substitute: "ANSI/ISO/ASQ A8402"

Paragraph 4.1.3 Inspections:

Delete: "MIL-STD-453" and substitute: "ASTM E 1742"

Paragraph 4.2.1.1 Submission of product:

Delete: "MIL-STD-105" and substitute: "ANSI/ASQ Z1.4"

FOR PROCUREMENT: N00104-15-N-B125 - 2/2/2015

ECP 09E215A010DBR1

Paragraph 4.2.2.3 Assembly, Drawing 10524101 or 8595821, less Drawings 8593014 and MIL-C-5501/11.

Delete: "MIL-C-5501/11" and substitute: "NAS832"

Paragraph 4.2.3.5.1 Ballistics:

Add: "Ballistic test samples for small lots shall be:

Lot size	Ballistic Sample
Less than 9	4
9 – 25	6
26 – 50	8
51 – 90	10
91 – 150	14
Over 150	21"

Justification: This reduced sample has been used for many years based on Memo 512:639:77 of 28 Nov 77.

Paragraph 4.3.1 Breakaway torque:

Delete: "…in an air vise…" and substitute: "…in a suitable vise…"

Paragraph 4.4 Radiographic examination:

Delete: "MIL-STD-453" and substitute: "ASTM E 1742"

Paragraph 5.2 Air Force packaging:

Delete: "TPO 00-932-5031" and substitute: "TPO F00-138-3770"

Paragraph 6.3 Explosive hazard classification information:

Delete in its entirety and substitute:
6.3 Contract packaging, packing, and marking. The following requirements should be specified in the contract.

6.3.1 Packing and marking shall be Level A or B, as specified by the contracting activity.

6.3.1.1 Level A shall be in accordance with Drawing 8796541 and 8796542 or SPI TPO F00-138-3770.

6.3.1.2 Level B shall be in accordance with Drawing 8796541 and 9216934 or SPI TPO F00-138-3770.

FOR PROCUREMENT: N00104-15-N-B125 - 2/2/2015

ECP 09E215A010DBR1

6.3.1.3 Lot numbers. Lot numbers shall be in accordance with MIL-STD-1168.

Justification: Explosive information is maintained in Joint Hazard Classification and not required in item specifications.

FOR PROCUREMENT: N00104-15-N-B125 - 2/2/2015

ECP 09E215A010DBR1

INCH-POUND
MIL-I-46559B
31 January 1990
SUPERSEDING
MIL-I-46559A(MU)
30 July 1969 and
Amendment 1
16 July 1973

MILITARY SPECIFICATION

INITIATOR, CARTRIDGE ACTUATED, M3A2, METAL PARTS ASSEMBLY

This specification is approved for use by all Departments and Agencies of the Department of Defense.

1. SCOPE

1.1 Scope. This specification covers the requirements for the M3A2 Cartridge Actuated Initiator Metal Parts Assembly (see 6.1).

2. APPLICABLE DOCUMENTS

2.1 Government documents.

2.1.1 Specifications, standards, and handbooks. The following specification, standards, and handbooks form a part of this document to the extent specified herein. Unless otherwise specified, the issues of these documents shall be those listed in the issue of the Department of Defense Index of Specifications and Standards (DODISS) and supplement thereto, cited in the solicitation (see 6.2).

SPECIFICATIONS

MILITARY

MIL-A-2550	Ammunition, General Specification For

STANDARDS

MILITARY

~~MIL-STD-105~~ ANSI/ASQ Z1.4	Sampling Procedures and Tables for Inspection by Attributes
~~MIL-STD-109~~ ANSI/ISO/ASQ A8402	Quality Assurance Terms and Definitions
MIL-STD-413	Visual Inspection Guide for Elastomeric O-rings

(Unless otherwise indicated, copies of federal and military specifications, standards, and handbooks are available from Military Specifications and Standards, Bldg 4D, 700 Robbins Avenue, Philadelphia, PA 19111-5094.)

Beneficial comments (recommendations, additions, deletions) and any pertinent data which may be of use in improving this document should be addressed to: Commanding Officer, Naval Ordnance Station, Standardization Branch (3730), Indian Head, MD 20640-5000, by using the self-addressed Standardization Document Improvement Proposal (DD Form 1426) appearing at the end of this document or by letter.

AMSC N/A FSC 1377

DISTRIBUTION STATEMENT A. Approved for public release; distribution is unlimited.

FOR PROCUREMENT: N00104-15-N-B125 - 2/2/2015

ECP 09E215A010DBR1

2.1.2 Other Government documents, drawings, and publications. The following other Government documents, drawings, and publications form a part of this document to the extent specified herein. Unless otherwise specified, the issues are those cited in the solicitation.

DRAWINGS

NAVAL ORDNANCE STATION, INDIAN HEAD, MD (CAGE Code 19200 and 19203)

8595822	Initiator, Cartridge Actuated, Metal Parts Assembly
8796541	Box, Fiberboard (Inner) Packing, Ammunition, for Initiator, Cartridge Actuated, M3A2 or M5A2
8796542	Box, Packing, Ammunition, for Initiator, Cartridge Actuated, M3A2 or M5A2
9216934	Box, Fiberboard (Outer) Alternative Packing, Ammunition, for Initiator, Cartridge Actuated, M3A2 or M5A2

U.S. AIR FORCE TPO F00-138-3770

~~TPO 00-932-5031~~ Initiator, ~~Cartridge Actuated, M3A2~~

(Application for copies should be addressed to: Commanding Officer, Naval Ordnance Station, Data Control Branch (Code 3720), Indian Head, MD 20640-5000.)

2.2 Order of precedence. In the event of a conflict between the text of this document and the references cited herein, the text of this document takes precedence. Nothing in this document, however, supersedes applicable laws and regulations unless a specific exemption has been obtained.

3. REQUIREMENTS

3.1 Materials. All materials used in the manufacture of the initiators shall conform strictly to the specifications referred to on the respective drawings unless specific approval in writing covering a departure therefrom has been obtained from the cognizant Navy design activity prior to manufacture. When alternate materials or methods of manufacture are specified on the drawings, the bidder's selections shall be clearly stated in the proposal.

3.2 First article. When specified in the contract or purchase order (see 6.2), a sample shall be subjected to first article inspection (see 4.4 and 6.3).

3.3 Raw material. The contractor shall be responsible for selecting from the classification list contained in the raw material specification the surface and physical condition of the raw material intended for use in manufacture.

3.4 Physical properties. Physical properties required by the drawing shall be uniform throughout the part within specificed tolerances. Requirements for all alloy steel parts shall be achieved by quenching and tempering.

3.5 Hydrostatic pressure. The subassembly consisting of a cap, chamber, and plug simulating the firing pin housing, without firing pin hole and with an O-ring, shall withstand a constant internal pressure of 5500 to 6500 pounds per square inch (psi) for 15 seconds, minimum (min), without application of any external load other than that applied by the liquid pressure and shall show no evidence of leakage or mechanical failure (see 4.6.2).

3.6 Firing pin release. The firing pin of the assembled initiator, less safety pin, cartridge, cartridge retainer, and chamber, shall release from the cocked position when the application of an axial load of 20 to 35 pounds has withdrawn the initiator pin ¾ inch, maximum (max).

FOR PROCUREMENT: N00104-15-N-B125 - 2/2/2015

ECP 09E215A010DBR1

3.7 Initiator pin security. The initiator pin of the assembled initiator, less cartridge, cartridge retainer, and chamber, shall not withdraw beyond the safety pin when subjected to an axial load of 200 to 220 pounds. Application of the load shall not cause permanent deformation of the safety pin.

3.8 Metal parts assembly. Parts shall be combined to produce an assembly which conforms to the requirements of the metal parts assembly drawing. All threaded joints shall be assembled handtight.

3.9 Protective finish. Protective finish shall be in accordance with the applicable specifications and shall apply to all surfaces of the component regardless of contour configuration.

3.10 Residual magnetism. The metal parts assembly shall not deflect the indicator of the compass more than five degrees in either direction using the procedures in 4.6.6.

3.11 Workmanship. The requirements for workmanship are as specified on the applicable drawings, referenced specifications, and the following:

3.11.1 Metal defects. All components shall be free from cracks, splits, cold shuts, inclusions, porosity, or any similar defect.

3.11.2 Burr. No part shall have a burr which might interfere with the assembly or function of the item or which might be injurious to personnel handling the item.

3.11.3 Foreign matter. No part or assembly shall contain chips, dirt, grease, rust, corrosion, or other foreign matter.

4. QUALITY ASSURANCE PROVISIONS

4.1 Responsibility for inspection. Unless otherwise specified in the contract or purchase order (see 6.2), the contractor is responsible for the performance of all inspection requirements (examinations and tests) as specified herein. Except as otherwise specified in the contract or purchase order, the contractor may use his own or any other facilities suitable for the performance of the inspection requirements specified herein, unless disapproved by the Government. The Government reserves the right to perform any of the inspections set forth in the specification where such inspections are deemed necessary to ensure supplies and services conform to prescribed requirements.

4.1.1 Responsibility for compliance. All items shall meet all requirements of sections 3 and 5. The inspection set forth in this specification shall become a part of the contractor's overall inspection system or quality program. The absence of any inspection requirements in the specification shall not relieve the contractor of the responsibility of ensuring that all products or supplies submitted to the Government for acceptance comply with all requirements of the contract. Sampling inspection, as part of manufacturing operations, is an acceptable practice to ascertain conformance to requirements; however this does not authorize submission of known defective material, either indicated or actual, nor does it commit the Government to acceptance of defective material.

ANSI/ISO/ASQ A8402

4.1.2 Quality assurance terms and definitions. Reference shall be made to ~~MIL-STD-109~~ to define the quality assurance terms used.

4.1.3 Inspection. Inspection shall be in accordance with MIL-A-2550.

FOR PROCUREMENT: N00104-15-N-B125 - 2/2/2015

ECP 09E215A010DBR1

4.2 Classification of inspections. The inspection requirements specified herein are classified as follows:

a. First article inspection (see 4.4)
b. Quality conformance inspection (see 4.5).

4.3 Inspection conditions. Unless otherwise specified, all inspections shall be performed under the following conditions:

a. Temperature: Room ambient 68 to 77 °F
b. Altitude: Sea level
c. Humidity: 50 percent relative, max
d. Atmospheric pressure: 14.7 psia.

4.4 First article inspection. At the beginning of regular production, the contractor shall submit an initial production sample to a Government approved facility for evaluation. The sample shall consist of 5 metal parts assemblies, 9 sets of unassembled parts, 1 set of unassembled parts without plating or final protective finish, and 50 shear pins from the same lot of shear pins tested by the contractor. The sample shall be manufactured in the same manner, using the same materials, equipment, processes and procedures as used in regular production. All parts and materials, including packaging and packing, must be the same as will be used for regular production and shall be obtained from the same source of supply. After inspection and provisional acceptance at source, the first article sample shall be inspected for all requirements of the drawings and specifications. The Government reserves the right to require new first article samples until such time as an acceptable sample is submitted (see 6.3).

4.5 Quality conformance inspection.

4.5.1 Lot.

4.5.1.1 Submission of product. Unless otherwise specified by the contracting activity, formation and identification of lots shall be in accordance with ~~MIL-STD-105.~~ ANSI/ASQ Z1.4

4.5.1.2 Size of lot. For the purpose of identification and shipment, the shipping lots of metal parts assemblies shall consist of 1200 initiators, max, provided the homogeneity requirements of inspection lots have been retained.

4.5.2 Examination. One-hundred percent examination shall be performed for all critical defects. Examination for major and minor defects shall be performed on a defect basis in accordance with the classification of defects. Four power (4X) magnification may be used in performing visual examination for such defects as burr and foreign matter. Inspection for rubber O-rings shall be in accordance with MIL-STD-413. When compliance with the applicable requirement is in doubt as a result of visual examination, the characteristic shall be measured or gaged to determine acceptability.

4.5.2.1 Retainer, Cartridge, Drawing 8593013, covering a detail of Drawing 8595822.

Characteristic	Defect	Method of Inspection
Critical		
1	Metering slots in base missing	Visual

FOR PROCUREMENT: N00104-15-N-B125 - 2/2/2015

ECP 09E215A010DBR1

Characteristic	Defect	Method of Inspection
Major		
101	Pitch diameter of thread, max	Gage
102	Minor diameter of thread, max	Gage
103	Concentricity of cavity with pitch diameter of thread	Gage
104	Perpendicularity of pitch diameter of thread with base	Gage
105	Symmetry of metering slots in base with body	Gage
106	Diameter of cavity, max	Gage
107	Depth of cavity	Gage
108	Depth of bottom of counterbore	Gage
109	Depth of metering slots in base	Gage
110	Total length	Gage
111	Length of effective thread, min	Gage
112	Width of metering slot, on base	Gage
113	Internal radius at mouth of cavity missing or incorrect	Gage
114	Drill point on base, max	Gage
115	Number of elongated slots incorrect	Visual
116	Thread damaged or not full	Visual
117	Metal defective	Visual
118	Protective finish inadequate or defective	Visual
119	Burr	Visual
120	Foreign matter present	Visual
Minor		
201	Pitch diameter of thread, min	Gage
202	Diameter of body	Gage
203	Diameter of cavity, min	Gage
204	Diameter of head	Gage
205	Length of elongated slots	Gage
206	Length of head	Gage
207	Width of elongated slots	Gage
208	Location of elongated slots	Gage
209	Angle between head and body	Gage
210	Location of metering slots	Visual
211	Profile of elongated slots	Visual
212	Marking missing, incorrect, or illegible	Visual
213	Radius missing or incorrect, except as otherwise classified	Visual
214	Surface finish improper except as otherwise classified	Visual

4.5.2.2 Chamber, Drawing 8593014 covering a detail of Drawing 8595822.

Critical

None defined

Major		
101	Pitch diameter of large thread, min	Gage
102	Major diameter of large thread, min	Gage
103	Pitch diameter of small thread, min	Gage

FOR PROCUREMENT: N00104-15-N-B125 - 2/2/2015

ECP 09E215A010DBR1

Characteristic	Defect	Method of Inspection
104	Major diameter of small thread, min	Gage
105	Concentricity of counterbore with pitch diameter of large thread	Gage
106	Concentricity of datum diameter with small thread	Gage
107	Diameter of counterbore	Gage
108	Depth of cavity	Gage
109	Thickness of wall, min	Gage
110	Location of datum diameter	Gage
111	Profile of gas port	Gage
112	Thread damaged or not full	Visual
113	Chamfer at base of cavity missing or incorrect	Visual
114	Metal defective	Visual
115	Protective finish inadequate or defective	Visual
116	Surface finish at end of gas port improper	Visual
117	Burr	Visual
118	Foreign matter present	Visual
Minor		
201	Pitch diameter of large thread, max	Gage
202	Pitch diameter of small thread, max	Gage
203	Diameter of cavity	Gage
204	Diameter of hole	Gage
205	Diameter of small thread pilot	Gage
206	Diameter of large thread pilot	Gage
207	Depth of counterbore	Gage
208	Total length	Gage
209	Length of large thread pilot	Gage
210	Length of end of large thread	Gage
211	Length of gas port	Gage
212	Thickness of wall, max	Gage
213	Location of small thread	Gage
214	Marking missing, incorrect, or illegible	Visual
215	Radius or chamfer missing or incorrect	Visual
216	Surface finish improper, except as otherwise classified	Visual

4.5.2.3 Pin, Initiator, Drawing 8595403, covering a detail of Drawing 8595822.

Critical

None defined

Major

101	Concentricity of groove in head with body	Gage
102	Symmetry of head with body	Gage
103	Diameter of body	Gage
104	Diameter of groove in body, min	Gage
105	Diameter of groove in head, min	Gage
106	Length to shoulder at head, min	Gage
107	Location of groove in head	Gage

FOR PROCUREMENT: N00104-15-N-B125 - 2/2/2015

ECP 09E215A010DBR1

Characteristic	Defect	Method of Inspection
108	Location of groove in body	Gage
109	Profile of groove in body	Gage
110	Profile of groove in head	Gage
111	Metal defective	Visual
112	Protective finish inadequate or defective	Visual
113	Surface finish on body and body groove improper	Visual
114	Burr	Visual
115	Foreign matter present	Visual
Minor		
201	Diameter of groove in head, max	Gage
202	Diameter of pull hole	Gage
203	Diameter of undercut, min	Gage
204	Length to shoulder at head, max	Ggae
205	Width of head	Gage
206	Width of shoulder at body groove	Gage
207	Width of groove in head	Gage
208	Width of undercut, max, if applicable	Gage
209	Total length	Gage
210	Thickness of head	Gage
211	Location of pull hole	Gage
212	Angle at base of body	Gage
213	Profile of head	Gage
214	Marking missing, incorrect, or illegible	Visual
215	Radius or chamfer missing or incorrect	Visual
216	Surface finish improper, except as otherwise classified	Visual

4.5.2.4 Cap, Drawing 8595404, covering a detail of Drawing 8595822.

Critical

None defined

Major

101	Pitch diameter of large thread, max	Gage
102	Minor diameter of large thread, max	Gage
103	Pitch diameter of small thread, max	Gage
104	Minor diameter of small thread, max	Gage
105	Concentricity of pitch diameter of large thread with pitch diameter of small thread including perpendicularity with base of large thread cavity	Gage
106	Concentricity of hole counterbore with hole	Gage
107	Concentricity of hole with pitch diameter of small thread including perpendicularity with base of large thread cavity	Gage
108	Symmetry of flats with pitch diameter, large thread	Gage
109	Diameter of hole	Gage
110	Diameter of hole counterbore	Gage
111	Diameter of pin holes	Gage
112	Depth of large thread cavity	Gage

FOR PROCUREMENT: N00104-15-N-B125 - 2/2/2015

ECP 09E215A010DBR1

Characteristic	Defect	Method of Inspection
113	Depth of small thread cavity	Gage
114	Length of effective large thread, min	Gage
115	Length of effective small thread, min	Gage
116	Thickness of wall	Gage
117	Height, max	Gage
118	Internal radius at base of large thread cavity missing or incorrect	Visual
119	Thread damaged or not full	Visual
120	Metal defective	Visual
121	Protective finish inadequate or defective	Visual
122	Surface finish of hole improper	Visual
123	Burr	Visual
124	Foreign matter present	Visual
Minor		
201	Pitch diameter of large thread, min	Gage
202	Pitch diameter of small thread, min	Gage
203	Pitch diameter of set screw thread	Gage
204	Minor diameter of set screw thread, max	Gage
205	Diameter of boss	Gage
206	Diameter of flange holes	Gage
207	Diameter of groove	Gage
208	Depth of hole counterbore	Gage
209	Total length	Gage
210	Length between flange holes	Gage
211	Length of flange	Gage
212	Width across body flats	Gage
213	Width of groove	Gage
214	Width of flange	Gage
215	Thickness of flange	Gage
216	Location of pin holes	Gage
217	Location of groove	Gage
218	Location of flange hole	Gage
219	Location of set screw holes	Gage
220	Location of initiator pin hole	Gage
221	Marking missing, incorrect, or illegible	Visual
222	Radius or chamfer missing or incorrect except as otherwise classified	Visual
223	Surface finish improper, except as other classified	Visual

4.5.2.5 Pin, Safety, Drawing 8595405, covering a detail of Drawing 8595822.

Critical

None defined

Major

101	Diameter of wire	Gage
102	Profile incorrect	Visual
103	Metal defective	Visual

FOR PROCUREMENT: N00104-15-N-B125 - 2/2/2015

ECP 09E215A010DBR1

Characteristic	Defect	Method of Inspection
104	Protective finish inadequate or defective	Visual
105	Burr or sharp edge	Visual
106	Foreign matter present	Visual
Minor		
201	Diameter of head	Gage
202	Total length	Gage
203	Radius missing or incorrect	Visual

4.5.2.6 Spring, Initiator, Drawing 8595406, covering a detail of Drawing 8595822.

Critical

None defined

Major

101	Load at specified heights	Gage
102	Height, solid, max	Gage
103	Ends incorrect	Visual
104	Protective finish inadequate or defective	Visual
105	Burr or sharp edges	Visual
106	Foreign matter present	Visual
Minor		
201	Diameter outside, closed, max	Gage
202	Diameter inside, min	Gage

4.5.2.7 Pin, Firing, Drawing 8596168 covering a detail of Drawing 8595822.

Critical

None defined

Major

101	Concentricity of body with cavity	Gage
102	Concentricity of body with striker	Gage
103	Diameter of body	Gage
104	Diameter of cavity	Gage
105	Diameter of striker	Gage
106	Diameter of ball hole, max	Gage
107	Depth of ball hole counterbore, max	Gage
108	Location of datum diameter	Visual
109	Radial profile of striker	Gage
110	Radial location of ball holes	Visual
111	Metal defective	Visual
112	Protective finish inadequate or defective	Visual
113	Surface finish improper	Visual
114	Burr or sharp edge	Visual
115	Foreign matter present	Visual

FOR PROCUREMENT: N00104-15-N-B125 - 2/2/2015

ECP 09E215A010DBR1

Characteristic	Defect	Method of Inspection
Minor		
201	Diameter of cavity counterbore	Gage
202	Diameter of ball hole, min	Gage
203	Diameter of ball hole counterbore	Gage
204	Diameter of midsection	Gage
205	Depth of cavity counterbore	Gage
206	Depth of cavity	Gage
207	Depth of ball hole counterbore, min	Gage
208	Total length	Gage
209	Length from body to striker	Gage
210	Length to ball hole	Gage
211	Drill point cavity, max	Visual
212	Radius or chamfer missing or incorrect	Visual

4.5.2.8 Housing, Firing Pin, Drawing 8596169, covering a detail of Drawing 8595822.

Critical

None defined

Major		
101	Pitch diameter of small thread, min	Gage
102	Major diameter of small thread, min	Gage
103	Pitch diameter of large thread, min	Gage
104	Major diameter of large thread, min	Gage
105	Concentricity of counterbore with cavity	Gage
106	Concentricity of flange with pitch diameter of small thread	Gage
107	Concentricity of groove with flange	Gage
108	Concentricity of striker hole with cavity	Gage
109	Concentricity of pitch diameter of large thread with cavity	Gage
110	Concentricity of cavity with pitch diameter of small thread, including perpendicularity with face of flange	Gage
111	Perpendicularity of boss face with pitch diameter of large thread	Gage
112	Diameter of cavity, max	Gage
113	Diameter of external datum location	Gage
114	Diameter of groove	Gage
115	Diameter of flange, min	Gage
116	Diameter of small thread undercut, min	Gage
117	Length from rear flange to cavity	Gage
118	Length to internal datum diameter	Gage
119	Width of rear flange	Gage
120	Angle of external datum diameter	Gage
121	Angle at internal datum diameter	Gage
122	Height of boss	Gage
123	Profile of groove	Gage
124	Radius at root of boss	Gage
125	Thread damaged or not full	Visual
126	Metal defective	Visual

FOR PROCUREMENT: N00104-15-N-B125 - 2/2/2015

ECP 09E215A010DBR1

characteristic	Defect	Method of Inspection
127	Protective finish inadequate or defective	Visual
128	Surface finish in cavity improper	Visual
129	Burr or sharp corner	Visual
130	Foreign matter present	Visual
Minor		
201	Pitch diameter of small thread, max	Gage
202	Pitch diameter of large thread, max	Gage
203	Diameter of cavity, min	Gage
204	Diameter of flange, max	Gage
205	Diameter of body	Gage
206	Diameter of counterbore	Gage
207	Diameter of undercut in cavity, if applicable	Gage
208	Diameter of striker hole	Gage
209	Diameter of small thread pilot	Gage
210	Depth to bottom of cavity	Gage
211	Total length	Gage
212	Length from small thread pilot to flange	Gage
213	Length across flanges	Gage
214	Length of body	Gage
215	Width of undercut in cavity, if applicable	Gage
216	Width of undercut, small thread	Gage
217	Width of groove	Gage
218	Location of flange	Gage
219	Radius or chamfer missing or incorrect, except as otherwise classified	Visual
220	Surface finish improper, except as otherwise classified	Visual

4.5.2.9 Seal, Drawing 10524102 covering a detail of Drawing 8595822.

Critical

None defined

Major		
101	Diameter outside, min	Gage
102	Width, min	Gage
103	Thickness, min	Gage
104	Cut, cracked, or split	Visual
105	Flash	Visual
106	Foreign matter present	Visual
Minor		
201	Diameter outside, max	Gage
202	Width, max	Gage
203	Thickness, max	Gage

FOR PROCUREMENT: N00104-15-N-B125 - 2/2/2015

ECP 09E215A010DBR1

4.5.2.10 Assembly, Drawing 8595822, less 8595403, 8595405, 8593013, and 8593014.

Characteristic	Defect	Method of Inspection
Critical		
1	Protrusion of firing pin	Gage
2	Steel ball missing	Gage
Major		
None defined		
Minor		
None defined		

4.5.2.11 Assembly, Drawing 8595822.

Critical		
1	Any part missing, except as otherwise classified	Visual
2	Improper assembly	Visual
Major		
101	Initiator pin not free to rotate	Manual
102	Safety pin loose or deformed	Manual/Visual
103	Marking missing, incorrect, or illegible	Visual
Minor		
201	Protective cap missing	Visual
202	Protective finish inadequate or defective	Visual

4.5.2.12 Box, Fiberboard (Inner) Packing Ammunition Drawing 8796541

Critical		
None defined		
Major		
None defined		
Minor		
201	Contents loose	Manual
202	Cut or damaged	Visual
203	Poor workmanship	Visual

4.5.2.13 Box, Packing, Ammunition, Drawing 8796542.

Critical		
None defined		
Major		
None defined		

FOR PROCUREMENT: N00104-15-N-B125 - 2/2/2015

ECP 09E215A010DBR1

Characteristic	Defect	Method of Inspection
Minor		
201	Contents loose	Manual
202	Broken or damaged	Visual
203	Number of units contained incorrect	Visual
203	Marking missing, incorrect, or illegible	Visual

4.5.2.14 Box, Fiberboard (Outer) Alternative, Packing, Drawing 9216934.

Critical

None defined

Major

None defined

Minor		
201	Contents loose	Manual
202	Box broken or damaged	Visual
203	Number of units contained incorrect	Visual
204	Marking missing, incorrect, or illegible	Visual
205	Tape incomplete	Visual

4.5.3 Inspection testing. The following tests shall be performed in accordance with 4.6.

4.5.3.1 Hardness. Fifty units from each heat treated lot of components shall be tested for compliance with the requirements on the applicable drawing. Failure of any unit to comply with the drawing requirements shall be cause for rejection of the lot of components.

4.5.3.2 Hydrostatic pressure. Each subassembly shall be subjected to the hydrostatic pressure test. Failure of any subassembly to comply with 3.5 shall be cause for rejection of the subassembly.

4.5.3.3 Firing pin release. The initiator pin of each subassembly shall be subjected to the firing pin release test. Failure of any subassembly to comply with 3.6 shall be cause for rejection of the subassembly.

4.5.3.4 Initiator pin security. The initiator pin of each subassembly shall be subjected to the initiator pin security test. Failure of any subassembly to comply with 3.7 shall be cause for rejection of the subassembly.

4.5.3.5 Protective finish. The number of units for protective finish tests shall be in accordance with the applicable specification. Failure of any unit in the inspection sample to comply with the requirements of the applicable specification shall be cause for rejection of the lot.

4.5.3.6 Residual magnetism. Each assembly shall be subjected to the test for excessive residual magnetism. Failure of any unit in the inspection sample to comply with 3.10 shall be cause for rejection of the assembly as specified in 4.6.6.

FOR PROCUREMENT: N00104-15-N-B125 - 2/2/2015

ECP 09E215A010DBR1

4.6 Test methods and procedures.

4.6.1 Hardness. Prior to the application of protective finish, a hardness tester shall be used to determine compliance with the requirements of the applicable drawing.

4.6.2 Hydrostatic pressure. Prior to the application of protective finish, the cap and chamber shall be mounted in the device, using a fixture for properly sealing all openings and subjected to the internal hydrostatic pressure to determine compliance with 3.5.

4.6.3 Firing pin release. The subassembly shall be secured in the fixture. A pull shall be applied to the initiator pin in the longitudinal direction in conjunction with the fixture which registers the amount of pull.

4.6.4 Initiator pin security. The subassembly shall be secured in the fixture with the safety pin in place. A pull shall be applied to the initiator pin in the longitudinal direction in conjunction with the fixture which registers the amount of pull. The test shall be performed with the safety pin in both positions.

4.6.5 Protective finish. Test procedures for protective finish shall be in accordance with the applicable specification referenced on the applicable drawing.

4.6.6 Residual magnetism. The assembly shall be tested for excessive residual magnetism using an approved compass in an area free of local magnetic effects by placing the assembly 5 inches from the end and at the same height as the compass, in a north-south horizontal position (cap end at south) with the compass set in an east-west heading. The assembly shall be moved at a speed no greater than 10 feet per minute past the compass for its entire length, rotated 90 degrees in the horizontal position about its longitudinal axis and moved slowly back past the compass. This procedure shall be repeated for each 90 degrees rotation of the assembly for four full passes.

4.7 Inspection of packaging. The sampling and inspection of the packaging, packing, and container marking shall be in accordance with section 5.

5. PACKAGING.

5.1 Packing and marking. Packing and marking shall be levels A or B as specified by the contracting activity:

Level A	In accordance with Drawings 8796541 and 8796542
Level B	In accordance with Drawings 8796541 and 9216934

5.2 Air Force packaging. Air Force packaging shall be in accordance with ~~TPO 00-932-5031.~~ TPO F00-138-3770

6. NOTES.

(This section contains information of a general or explanatory nature that may be helpful but is not mandatory.)

6.1 Intended use. The assembly will ultimately be loaded and used in conjunction with other propellant actuated devices in aircrew emergency escape systems.

6.2 Acquisition requirements. Acquisition documents must specify the following:

a. Title, number, and date of this specification
b. Issue of DODISS to be cited in the solicitation, and if required, the specific issue of individual documents referenced (see 2.1)

FOR PROCUREMENT: N00104-15-N-B125 - 2/2/2015

ECP 09E215A010DBR1

c. If first article inspection is required (see 3.2 and 6.3)
d. The responsible inspection activity (see 4.1)
e. Level of marking and packing (see 5.1)

6.3 First article. When a first article inspection is required, the items should be a first article sample. The first article should consist of 5 metal parts assemblies, 9 sets of unassembled parts, 1 set of unassembled parts without plating or final protective finish, and 50 shear pins. The contracting officer should include specific instructions in acquisition documents regarding arrangements for examinations, approval of first article test results and disposition of first articles. Invitations for bids should provide that the Government reserves the right to waive the requirement for samples for first article inspection to those bidders offering a product which has been previously acquired or tested by the Government, and that bidders offering such products, who wish to rely on such production or test, must furnish evidence with the bid that prior Government approval is presently appropriate for the pending contract.

6.4 Definition.

6.4.1 Mechanical failure. Mechanical failure is any deformation or breakage of a part, the occurrence of which is other than a design function.

6.5 Subject term (keyword) listing.

Ejection systems, aircrew
Emergency escape systems, aircrew
Escape systems, aircrew
Life-saving systems, aircrew

6.6 Changes from previous issue. Asterisks are not used in this revision to identify changes with respect to the previous issue due to the extensiveness of the changes.

Custodian:
Navy-OS
Air Force-99

Preparing activity:
Navy-OS
(Project 1377-0959)

Review activity:
Air Force-70

*U.S. GOVERNMENT PRINTING OFFICE: 1990--704-034/30293

FOR PROCUREMENT: N00104-15-N-B125 - 2/2/2015

ECP 09E215A010DBR1

INCH-POUND
MIL-I-46625C
31 January 1990
SUPERSEDING
MIL-I-46625B(MU)
12 June 1969 and
AMENDMENT 2
20 July 1973

MILITARY SPECIFICATION

INITIATOR, CARTRIDGE ACTUATED, M3A2, ASSEMBLY

This specification is approved for use by all Departments and Agencies of the Department of Defense.

1. SCOPE

1.1 Scope. This specification covers the requirements for the M3A2 Cartridge Actuated Initiator (see 6.1).

2. APPLICABLE DOCUMENTS

2.1 Government documents.

2.1.1 Specifications, standards, and handbooks. The following specifications, standards, and handbooks form a part of this document to the extent specified herein. Unless otherwise specified, the issues of these documents shall be those listed in the issue of the Department of Defense Index of Specifications and Standards (DODISS) and supplement thereto, cited in the solicitation (see 6.2).

SPECIFICATIONS

MILITARY

MIL-A-2550	Ammunition, General Specification For
MIL-I-14802	Initiator, Cartridge Actuated, M3A2, Remanufactured Metal Parts Assembly
MIL-I-46559	Initiator, Cartridge Actuated, M3A2, Metal Parts Assembly

STANDARDS

MILITARY

ANSI/ASQ Z1.4 ~~MIL-STD-105~~	Sampling Procedures and Tables for Inspection by Attributes
ANSI/ISO/ASQ A8402 ~~MIL-STD-109~~	Quality Assurance Terms and Definitions
ASTM E 1742 ~~MIL-STD-453~~	Inspection, Radiographic
MS28741	Hose Assembly, Detachable End Fitting, Medium Pressure

(Unless otherwise indicated, copies of federal and military specifications, standards, and handbooks are available from Military Specifications and Standards, Bldg 4D, 700 Robbins Avenue, Philadelphia, PA 19111-5094.)

Beneficial comments (recommendations, additions, deletions) and any pertinent data which may be of use in improving this document should be addressed to: Commanding Officer, Naval Ordnance Station, Standardization Branch (3730), Indian Head, MD 20640-5000, by using the self-addressed Standardization Document Improvement Proposal (DD Form 1426) appearing at the end of this document or by letter.

AMSC N/A FSC 1377

DISTRIBUTION STATEMENT A. Approved for public release; distribution is unlimited.

FOR PROCUREMENT: N00104-15-N-B125 - 2/2/2015

ECP 09E215A010DBR1

2.1.2 Other Government documents, drawings, and publications. The following other Government documents, drawings, and publications form a part of this document to the extent specified herein. Unless otherwise specified, the issues are those cited in the soliciation.

DRAWINGS

NAVAL ORDNANCE STATION, INDIAN HEAD, MD (CAGE Code 19200 and 19203)

DL8595821	Initiator, Cartridge Actuated, M3A2 Assembly
8594157	Cartridge, Impulse, M73 Assembly
8796541	Box, Fiberboard (Inner) Packing, Ammunition, for Initiators, Cartridge Actuated, M3A2 or M5A2
8796542	Box, Packing, Ammunition, for Initiator, Cartridge Actuated, M3A2 or M5A2
9216934	Box, Fiberboard (Outer) Alternative Packing, Ammunition, for Initiator, Cartridge Actuated, M3A2 or M5A2

U.S. AIR FORCE TPO F00-138-3770

~~TPO 00-932-5031~~ Initiator, ~~Cartridge Actuated, M3A2~~

(Application for copies should be addressed to: Commanding Officer, Naval Ordnance Station, Data Control Branch (3720), Indian Head, MD 20640-5000.)

2.2 Order of precedence. In the event of a conflict between the text of this document and the references cited herein, the text of this document takes precedence. Nothing in this document, however, supersedes applicable laws and regulations unless a specific exemption has been obtained.

3. REQUIREMENTS

3.1 Materials. All materials used in the manufacture of the initiators shall conform strictly to the specifications referred to on the respective drawings unless specific approval in writing covering a departure therefrom has been obtained from the cognizant Navy design activity prior to manufacture. When alternate materials or methods of manufacture are specified on the drawings, the bidder's selections shall be clearly stated in the proposal.

3.2 Primary components. For the purpose of this specification, the M73 impulse cartridge (Drawing 8594157) is defined as a primary component. Only primary components from a single lot shall be used in a production lot of initiators. One primary component production lot may be used in more than one initiator production lot.

3.3 Firing pin release. The firing pin of the assembled initiator, less safety pin, cartridge, cartridge retainer, and chamber, shall release from the cocked position when the application of an axial load of 20 to 35 pounds has withdrawn the initiator pin 3/4 inch, maximum (max).

3.4 Initiator pin security. The initiator pin of the assembled initiator, less cartridge, cartridge retainer, and chamber, shall not withdraw beyond the safety pin when subjected to an axial load of 200 to 220 pounds. Application of the load shall not cause permanent deformation of the safety pin.

3.5 Breakaway torque. The initiator chamber and cap of the assembled initiator shall withstand a breakaway torque application of 400 inch-pounds without loosening or deformation (see 4.2.3.1).

FOR PROCUREMENT: N00104-15-N-B125 - 2/2/2015

ECP 09E215A010DBR1

3.6 Residual magnetism. The initiator shall not deflect the indicator of the compass more than five degrees in either direction using the procedures in 4.3.2.

3.7 Functional.

3.7.1 Ballistics. Initiators loaded with accepted cartridges and temperature conditioned shall perform within the pressure values and ignition delays specified in table I. Pressure values shall be recorded at the end of 15 feet of aircraft hose, assembly number MS28741-4.

TABLE I. *Pressure values.*

Temperature (°F)	Pressure (psi)		Ignition delay, max, milliseconds (see 6.5.2)
	Minimum	Maximum	
−60 to −70	550	1450	65
65 to 75	700	1550	65
195 to 205	700	1700	65

3.7.2 Misfires. There shall be no misfires.

3.7.3 Mechanical failures. The initiator shall function without mechanical failure (see 6.5.1).

3.8 Workmanship. Initiators shall be free of cracks, splits, incomplete or damaged threads on inlet and outlet ends, or other defects which might prevent proper mating with connecting parts or proper functioning of the device.

3.8.1 Metal defects. All components shall be free from cracks, splits, cold shuts, inclusions, porosity or any similar defect.

3.8.2 Burr. No part shall have a burr which might interfere with the assembly or function of the item or which might be injurious to personnel handling the item.

3.8.3 Foreign matter. No part or assembly shall contain chips, dirt, grease, rust, corrosion or other foreign matter.

3.9 Radiographic examination. Each initiator assembly shall be radiographically examined for defects as specified in 4.4.

3.10 Component parts. All component parts shall meet the requirements of MIL-I-14802 or MIL-I-46559 prior to assembly.

4. QUALITY ASSURANCE PROVISIONS

4.1 Responsibility for inspection. Unless otherwise specified in the contract or purchase order (see 6.2), the contractor is responsible for the performance of all inspection requirements (examinations and tests) as specified herein. Except as otherwise specified in the contract or purchase order, the contractor may use his own or any other facilities suitable for the performance of the inspection requirements specified herein, unless disapproved by the Government. The Government reserves the right to perform any of the inspections set forth in the specification where such inspections are deemed necessary to ensure supplies and services conform to prescribed requirements.

FOR PROCUREMENT: N00104-15-N-B125 - 2/2/2015

ECP 09E215A010DBR1

4.1.1 Responsibility for compliance. All items shall meet all requirements of sections 3 and 5. The inspection set forth in this specification shall become a part of the contractor's overall inspection system or quality program. The absence of any inspection requirements in the specification shall not relieve the contractor of the responsibility of ensuring that all products or supplies submitted to the Government for acceptance comply with all requirements of the contract. Sampling inspection, as part of manufacturing operations, is an acceptable practice to ascertain conformance to requirements; however, this does not authorize submission of known defective material, either indicated or actual, nor does it commit the Government to acceptance of defective material.

ANSI/ISO/ASQ A8402

4.1.2 Quality assurance terms and definitions. Reference shall be made to ~~MIL-STD-109~~ to define the quality assurance terms used.

ASTM E 1742

4.1.3 Inspection. Inspection shall be in accordance with MIL-A-2550 and ~~MIL-STD-453.~~

4.2 Inspection conditions. Unless otherwise specified, all inspections shall be performed under the following conditions:

a. Temperature: Room ambient 68 to 77 °F
b. Altitude: Sea level
c. Humidity: 50 percent relative, max
d. Atmospheric pressure: 14.7 psia

4.2.1 Lot.

4.2.1.1 Submission of product. Unless otherwise specified by the contracting activity, formation and identification of lots shall be in accordance with ~~MIL-STD-105.~~

ANSI/ASQ Z1.4

4.2.1.2 Size of lot. A lot shall consist of an identifiable group of assembled initiators containing metal parts assemblies produced by a homogeneous process and loaded with one lot of accepted cartridges.

4.2.2 Examination. One-hundred percent examination shall be performed for all critical defects. Examination for major and minor defects shall be performed in accordance with the classification of defects. Four power (4X) magnification may be used for inspection of such defects as burr and foreign matter.

4.2.2.1 Cartridge, Impulse M73, Drawing 8594157, covering a detail of Drawing 8595821 or 10524101.

Characteristic	Defect	Method of Inspection
Critical		
1	Mixed cartridges	Visual
2	Metal defective	Visual
3	Marking missing, incorrect, or illegible	Visual
Major		
101	Foreign matter present	Visual
Minor		
201	Case scratched or dented	Visual

FOR PROCUREMENT: N00104-15-N-B125 - 2/2/2015

ECP 09E215A010DBR1

4.2.2.2 Assembly, Drawing 10524101 or 8595821 less Drawing 8595404, 8593013, 8593014, and 8359536.

Characteristic	Defect	Method of Inspection
Critical		
1	Mixed initiators	Visual
2	Initiator not in cocked position	Visual
3	Safety pin missing or improperly engaged	Visual
4	O-ring missing	Visual
Major		
101	Thread damaged	Visual
102	Foreign matter present	Visual
Minor		
201	O-ring not lubricated	Visual

4.2.2.3 Assembly, Drawing 10524101 or 8595821, less Drawings 8593014 and ~~MIL-C-5501/11.~~ NAS832

Critical		
1	Cartridge loose	Visual/Manual
2	Cartridge retainer loose	Visual/Manual
3	Metering groove of retainer missing	Visual
4	Elongated hole of cartridge retainer missing	Visual
Major		
None defined		
Minor		
None defined		

4.2.2.4 Assembly, Drawing 10524101 or Drawing 8595821.

Critical		
1	Location of cartridge retainer	Gage/x-ray
2	Any part missing	Visual/x-ray
3	Improper assembly	Visual/x-ray
4	Foreign matter in gas port	Visual
Major		
101	Length from cap boss face to gas port face, max	Gage
102	Height of cap, max	Gage
103	Cap set screw missing, loose or above flush	Visual
Minor		
201	Total length, max	Gage
202	Location of marking incorrect	Visual
203	Protective finish inadequate or defective	Visual
204	Protective cap missing	Visual

FOR PROCUREMENT: N00104-15-N-B125 - 2/2/2015

ECP 09E215A010DBR1

4.2.2.5 Box, Fiberboard (Inner) Packing Ammunition, Drawing 8796541.

Characteristic	Defect	Method of Inspection
Critical		
None defined		
Major		
None defined		
Minor		
201	Gap between body and cover, max	Manual
202	Contents loose	Manual
203	Metal ends loose or distorted	Manual
204	Cut or damaged through all impregnated layers	Visual
205	Marking missing, incorrect, or illegible	Visual
206	Tape incomplete, torn, or badly wrinkled	Visual
207	Length of tear tab, min	Visual
208	Color of tape incorrect	Visual

4.2.2.6 Box, Packing Ammunition, Drawing 8796542.

Critical		
None defined		
Major		
None defined		
Minor		
201	Contents loose	Manual
202	Strapping missing, loose, broken, or improperly assembled	Manual/Visual
203	Contents of box exposed	Visual
204	Box damaged	Visual
205	Marking missing, incorrect, or illegible	Visual
206	Number of units incorrect	Visual

4.2.2.7 Box, Fiberboard (Outer) Alternative Packing Ammunition, Drawing 9216934.

Critical		
None defined		
Major		
None defined		
Minor		
201	Contents loose	Manual
202	Box broken or damaged	Visual
203	Number of units contained incorrect	Visual
204	Marking missing, incorrect, or illegible	Visual
205	Tape incomplete	Visual

FOR PROCUREMENT: N00104-15-N-B125 - 2/2/2015

ECP 09E215A010DBR1

4.2.3 Inspection testing. The following tests shall be performed in accordance with 4.3.

4.2.3.1 Breakaway torque. Each assembly shall be subjected to the breakaway torque test of the threaded joint between the cap and the chamber. Failure of any assembly to comply with 3.5 shall be cause for rejection of the assembly.

4.2.3.2 Residual magnetism. Each initiator shall be subjected to the test for excessive residual magnetism as specified in 4.3.2. Failure of any initiator to comply with 3.6 shall be cause for rejection of the initiator.

4.2.3.3 Firing pin release. The initiator pin of each subassembly shall be subjected to the firing-pin release test. Failure of any subassembly to comply with 3.3 shall be cause for rejection of the subassembly.

4.2.3.4 Initiator pin security. The initiator pin of each subassembly shall be subjected to the initiator pin security test. Failure of any unit to comply with 3.4 shall be cause for rejection of the subassembly.

4.2.3.5 Functional tests. The following tests shall be performed by the Government.

4.2.3.5.1 Ballistics. Twenty-one units shall be tested to determine compliance with 3.7.1. The units shall be temperature conditioned as provided in table II and 4.3.5.2. Failure of any unit to comply with 3.7.1 shall be cause for rejection of the lot.

TABLE II. *Conditioning temperature.*

Temperature (°F)	Sample size
−60 to −70	7
65 to 75	7
195 to 205	7

Ballistic test samples for small lots shall be:

Lot size	Ballistic Sample
Less than 9	4
9 – 25	6
26 – 50	8
51 – 90	10
91 – 150	14
Over 150	21

4.2.3.5.2 Retest. There shall be no retests.

4.2.3.5.3 Test failure. If a test failure is attrib luding the test initiator, the original test results shall be discarded and that test

4.3 Test methods and procedures.

4.3.1 Breakaway torque. A torque wrench se ed in 3.5 shall be used in conjunction with a fixture to determine the adequac l be secured ~~in an air vise~~ in a suitable vise and the torque shall be applied to the cap.

4.3.2 Residual magnetism. The assembly shall be tested for excessive residual magnetism using an approved compass in an area free of local magnetic effects by placing the assembly 5 inches from the end at the same height as the compass, in a north-south horizontal position (cap end at south) with the compass set in an east-west heading. The assembly shall be moved at a speed not greater than 10 feet per minute past the compass for its entire length, rotated 90 degrees in the horizontal position about its longitudinal axis, and moved slowly back past the compass. This procedure shall be repeated for each 90 degrees rotation of the assembly for four full passes.

4.3.3 Firing pin release. The subassembly shall be secured in the fixture. A pull shall be applied to the initiator pin in the longitudinal direction in conjunction with the fixture which registers the amount of pull.

FOR PROCUREMENT: N00104-15-N-B125 - 2/2/2015

ECP 09E215A010DBR1

4.3.4 Initiator pin security. The subassembly shall be secured in the fixture with the safety pin in place. A pull shall be applied to the initiator pin in the longitudinal direction in conjunction with a fixture which registers the amount of pull. The test shall be performed with the safety pin in both positions.

4.3.5 Functional.

4.3.5.1 Ballistics. The test sample shall be rigidly supported in the fixture. The sample shall be tested within 5 minutes after removal from the conditioning chamber. When this time limit is exceeded, the sample shall be reconditioned in accordance with 4.3.5.2. Required pressure-time readings shall be taken as specified in 3.7.1.

4.3.5.2 Temperature conditioning. Each assembled initiator shall be conditioned for a period of time not less than 4 hours nor greater than 24 hours. When reconditioning initiators at −60 °F, all condensation shall be removed from the interior surfaces before returning the initiator to the conditioning chamber.

ASTM E 1742

4.4 Radiographic examination. All assembled initiators shall be radiographically examined in accordance with ~~MIL-STD-453,~~ with the exception that an assembled M3A2 initiator will be used for the penetrameter. Any observable imperfections in components or assembly shall be cause for rejection. The initiators shall be positioned for the most revealing exposure, with the long axis of each assembly perpendicular to the rays of the X-ray machine. All initators shall be identified with serial numbers prior to X-ray examination. The serial numbers shall be in consecutive numerical order beginning with the number 001 in each production lot. Any missing serial numbers are to be identified on the X-rays. The initiators shall be arranged on boards or trays in consecutive order and each radiograph shall carry a permanent identification of the units displayed thereon. The radiographic plate identification shall include item nomenclature, the complete lot number assigned to that lot, the span of serial numbers displayed, and the contract number. Radiographs of the entire production lot shall accompany the ballistic sample to the activity conducting the production lot acceptance test. Defective initiators found during X-ray review are to be marked on the X-ray prior to shipment and those defective items shall be removed from the production lot. Film interpretation of the radiographs shall verify the presence and correct positioning of the following parts:

a. O-ring	P/N MS28755-214
b. Steel balls present (3 ea)	P/N MS19060-3
c. Firing pin	P/N 8596168
d. Spring initiator	P/N 8595406
e. Seal	P/N 10524102
f. Firing pin housing	P/N 8596169
g. Retainer, cartridge	P/N 8596013
h. Cap set screws, No. 10 (.190)	
i. Cartridge, Impulse, M73	P/N 8594157
j. Pin, initiator	P/N 8595403
k. Chamber	P/N 8593014
l. Cap	P/N 8595404

4.5 Inspection of packaging. The sampling and inspection of the packaging, packing, and container marking shall be in accordance with section 5.

5. PACKAGING

5.1 Packing and marking. Packing and marking shall be levels A or B as specified by the contracting activity:

Level A - In accordance with Drawings 8796541 and 8796542
Level B - In accordance with Drawings 8796541 and 9216934

TPO F00-138-3770

5.2 Air Force packaging. Air Force packaging shall be in accordance with ~~TPO 00-932-5031~~.

FOR PROCUREMENT: N00104-15-N-B125 - 2/2/2015

ECP 09E215A010DBR1

6. NOTES

(This section contains information of a general or explanatory nature that may be helpful but is not mandatory.)

6.1 Intended use. The M3A2 initiator assembly, loaded with the M73 impulse cartridge, is used in conjunction with other propellant actuated devices in aircrew emergency escape systems.

6.2 Acquisition requirements. Acquisition documents must specify the following:

a. Title, number, and date of this specification
b. Issue of DODISS to be cited in the solicitation, and if required, the specific issue of individual documents reference (see 2.1)
c. The responsible inspection activity (see 4.1)
d. Production lot size and test activity (see 4.2.1)
e. Direction for shipping radiographs of entire production lot along with ballistic sample to the activity conducting production lot acceptance tests (see 4.4)
f. Level of marking and packing (see 5.1)
g. Safety precautions (see 6.6).

6.3 ~~**Explosive hazard classification information.**~~

~~Hazard Classification/Division: 1.4~~ See page 10.
~~Storage Compatibility Group: S~~
~~DOT Class: C~~
~~DOT Marking — Explosive Power Device — Class C — Handle Carefully — Keep Fire Away~~

6.4 Hazard notice. The initiator described herein and certain of its components are flammable, explosive, or both. Consequently it presents hazards in manufacture, handling, storage, and shipment. The contractor should recognize these hazards and take appropriate measures to guard and protect against fire, explosion, adverse environment, corrosive atmosphere, rough handling, and electrically induced incidents.

6.5 Definitions.

6.5.1 Mechanical failure. Mechanical failure is any deformation or breakage of a part, the occurrence of which is other than a design function.

6.5.2 Ingition delay. Ignition delay is the time measured between the firing pin striking the primer or ignition device and the first indication of pressure.

6.6 Safety precautions. The safety precaution requirements of "Contractor' Safety Manual for Ammunition, Explosives, and Related Dangerous Material" (DOD 4145.26M) are applicable and should be specified in the contract as required by the Federal Acquisition Regulation (FAR) 23.3. NOTE: When this specification is used as part of the description of work to he accomplished by a Government activity, the safety precaution requirements of "Ammunition and Explosives Ashore" (OP 5) should be made applicable.

6.7 Subject term (keyword) listing.

Ejection systems, aircrew
Emergency escape systems, aircrew
Escape systems, aircrew
Life-saving systems, aircrew

FOR PROCUREMENT: N00104-15-N-B125 - 2/2/2015
ECP 09E215A010DBR1

6.8 Changes from previous issue. Asterisks are not used in this revision to identify changes with respect to the previous issue because of the extensiveness of the changes.

Custodian:
Navy-OS
Air Force-99

Preparing activity:
Navy-OS
(Project 1377-0958)

Review activity:
Air Force-70

6.3 Contract packaging, packing, and marking. The following requirements should be specified in the contract.

6.3.1 Packing and marking shall be Level A or B, as specified by the contracting activity.

6.3.1.1 Level A shall be in accordance with Drawing 8796541 and 8796542 or SPI TPO F00-138-3770.

6.3.1.2 Level B shall be in accordance with Drawing 8796541 and 9216934 or SPI TPO F00-138-3770.

6.3.1.3 Lot numbers. Lot numbers shall be in accordance with MIL-STD-1168.

FOR PROCUREMENT: N00104-15-N-B125 - 2/2/2015

ECP 09E215A010DBR1

STANDARDIZATION DOCUMENT IMPROVEMENT PROPOSAL

INSTRUCTIONS

1. The preparing activity must complete blocks 1, 2, 3, and 8. In block 1, both the document number and revision letter should be given.
2. The submitter of this form must complete blocks 4, 5, 6, and 7.
3. The preparing activity must provide a reply within 30 days from receipt of the form.

NOTE: This form may not be used to request copies of documents, nor to request waivers, or clarification of requirements on current contracts. Comments submitted on this form do not constitute or imply authorization to waive any portion of the referenced document(s) or to amend contractual requirements.

I RECOMMEND A CHANGE:	1. DOCUMENT NUMBER	2. DOCUMENT DATE (YYMMDD)
	MIL-I-46625C	900131

3. DOCUMENT TITLE

INITIATOR, CARTRIDGE ACTUATED, M3A2, ASSEMBLY

4. NATURE OF CHANGE *(Identify paragraph number and include proposed rewrite, if possible. Attach extra sheets as needed.)*

5. REASON FOR RECOMMENDATION

6. SUBMITTER

a. NAME (Last, First, Middle Initial)	b. ORGANIZATION	
c. ADDRESS (Include Zip Code)	d. TELEPHONE (Include Area Code) (1) Commercial (2) AUTOVON (If applicable)	7. DATE SUBMITTED (YYMMDD)

8. PREPARING ACTIVITY

a. NAME	b. TELEPHONE (Include Area Code)	
	(1) Commercial	(2) AUTOVON
Commanding Officer Naval Ordnance Station	(301) 743-4250	364-4250
c. ADDRESS (Include Zip Code) (Code 3730) Indian Head, MD 20640-5000	IF YOU DO NOT RECEIVE A REPLY WITHIN 45 DAYS, CONTACT: Defense Quality and Standardization Office 5203 Leesburg Pike, Suite 1403, Falls Church, VA 22041-3466 Telephone (703) 756-2340 AUTOVON 289-2340	

DD Form 1426, OCT 89 *Previous editions are obsolete* 198/290

FOR PROCUREMENT: N00104-15-N-B125 - 2/2/2015

ECP 09E215A010DBR1

CLASSIFICATION OF CHARACTERISTICS (DOD-STD-2101)	
CRITICAL-	NONE
MAJOR-	NONE
MINOR-	ALL CHARACTERISTICS

FOR PROCUREMENT: N00104-15-N-B125 - 2/2/2015

REVISIONS			
REV	DESCRIPTION	DATE	APPROVAL
D	REDRAWN WITH CHANGE SEE ECP 09E215A010DBR1	2012/02/15	

CAD MAINTAINED, CHANGES SHALL BE INCORPORATED BY THE DESIGN ACTIVITY

NOTES:

1. SPECIFICATION MIL-A-2550 APPLIES.
2. MATERIAL: RUBBER, SILICONE, CLASS 1B, GRADE 50, PER A-A-59588.
3. REMOVE ALL FLASH.
4. DUROMETER HARDNESS TO BE 50±5.
5. REFER TO MIL-I-46559 PARAGRAPH 4.5.2.9 OR MIL-I-14802 PARAGRAPH 4.3.2.15 FOR CRITICAL AND MAJOR CHARACTERISTICS.

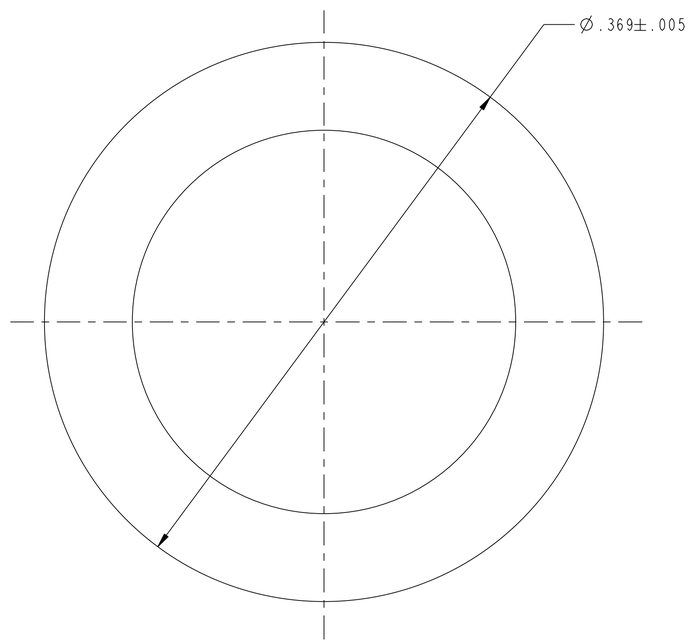

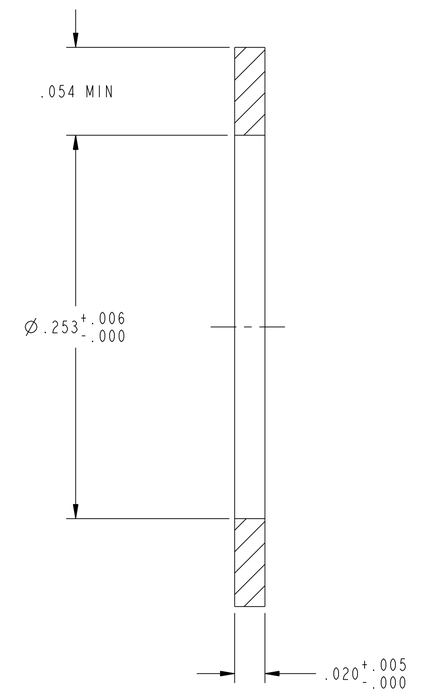

CURRENT DESIGN ACTIVITY CAGE CODE 14083
DEPARTMENT OF THE NAVY
NAVAL SURFACE WARFARE CENTER
INDIAN HEAD DIVISION
INDIAN HEAD, MARYLAND 20640-5035

DISTRIBUTION STATEMENT C:
DISTRIBUTION AUTHORIZED TO U.S. GOVERNMENT AGENCIES AND THEIR CONTRACTORS, ADMINISTRATIVE OR OPERATIONAL USE, 4-10-91. OTHER REQUESTS FOR THIS DOCUMENT SHALL BE REFERRED TO COMMANDING OFFICER, NAVAL ORDNANCE STATION, INDIAN HEAD, MD 20640-5000.

SEE ENGINEERING RECORDS	
NEXT ASSY	USED ON
APPLICATION	

UNLESS OTHERWISE SPECIFIED DIMENSIONS ARE IN INCHES
GENERAL TOLERANCES
XX DECIMALS ± —
XXX DECIMALS ± —
ANGLES ± —
MATERIAL: 2.
DO NOT SCALE DRAWING

INDIAN HEAD DIVISION
NAVAL SURFACE WARFARE CENTER
INDIAN HEAD, MD 20640-5035

ENGINEER		
ENGINEER		
CHECKED		
DRAWN		
APPROVED FOR		DATE

AUTHENTICATED 6/12/64

US ARMY
FRANKFORD ARSENAL

SEAL

SIZE	CAGE CODE	DRAWING NUMBER
D	19200	10524102
SCALE: NONE		SHEET 1 OF 1

CLASSIFICATION OF CHARACTERISTICS (DOD-STD-2101)	
CRITICAL-	NONE
MAJOR-	NONE
MINOR-	ALL CHARACTERISTICS

FOR PROCUREMENT: N00104-15-N-B125 - 2/2/2015

REVISIONS			
REV	DESCRIPTION	DATE	APPROVAL
B	REDRAWN WITH CHANGE SEE ECP 0352201020	20030422	MRN

CAD MAINTAINED. CHANGES SHALL BE INCORPORATED BY THE DESIGN ACTIVITY.

NOTES:

1. INTERPRET DRAWING IN ACCORDANCE WITH ASME Y14.100-2000, APPENDIX B-E.
2. LUBRICANT SHALL BE MEDIUM CONSISTENCY.

ONLY ITEMS DESCRIBED ON THIS DRAWING ARE APPROVED FOR USE IN THE APPLICATIONS SPECIFIED HEREON. A SUBSTITUTE ITEM SHALL NOT BE USED WITHOUT PRIOR APPROVAL BY THE QUALIFYING ACTIVITY.

IDENTIFICATION OF THE APPROVED SOURCE(S) OF SUPPLY HEREON IS NOT TO BE CONSTRUED AS A GUARANTEE OF PRESENT OR CONTINUED AVAILABILITY AS A SOURCE OF SUPPLY FOR THE ITEM DESCRIBED ON THE DRAWING.

APPROVED SOURCE(S) OF SUPPLY		
VENDOR		
NAME AND ADDRESS	CAGE CODE	PART NUMBER
DOW CORNING CORP. MIDLAND, MICHIGAN 48640	5D028	33

SOURCE CONTROL DRAWING

DISTRIBUTION STATEMENT C:
DISTRIBUTION AUTHORIZED TO U.S. GOVERNMENT AGENCIES AND THEIR CONTRACTORS, ADMINISTRATIVE OR OPERATIONAL USE, 7-1-93. OTHER REQUESTS FOR THIS DOCUMENT SHALL BE REFERRED TO COMMANDER, INDIAN HEAD DIVISION, NAVAL SURFACE WARFARE CENTER, 101 STRAUSS AVENUE INDIAN HEAD, MD. 20640-5035.

APPLICATION	
834AS105	JAU-13/A
834AS104	JAU-14/A
834AS104	JAU-13/A
NEXT ASSY	USED ON

UNLESS OTHERWISE SPECIFIED DIMENSIONS ARE IN INCHES
GENERAL TOLERANCES
XX DECIMALS ± —
XXX DECIMALS ± —
ANGLES ± —
MATERIAL: ———
DO NOT SCALE DRAWING

INDIAN HEAD DIVISION
NAVAL SURFACE WARFARE CENTER
INDIAN HEAD, MD 20640-5035

ENGINEER
ENGINEER
CHECKED
DRAWN
APPROVED FOR NAVAL
DATE 1-7-76

AUTHENTICATED 1/7/76

DEPARTMENT OF THE NAVY
NAVAL AIR SYSTEMS COMMAND
WASHINGTON, D.C. 20360

LUBRICANT, O-RING

SIZE	CAGE CODE	DRAWING NUMBER
D	30003	834AS129

SCALE: NONE | WEIGHT: --- | SHEET 1 OF 1

CLASSIFICATION OF CHARACTERISTICS (DOD-STD-2101)	
CRITICAL-	NONE
MAJOR-	NONE
MINOR-	ALL CHARACTERISTICS

FOR PROCUREMENT: N00104-15-N-B125 - 2/2/2015

REVISIONS

REV	DESCRIPTION	DATE	APPROVAL
J	REDRAWN WITH CHANGE SEE ECP 09E215A010DBR1	2012/02/15	

CAD MAINTAINED, CHANGES SHALL BE INCORPORATED BY THE DESIGN ACTIVITY

NOTES:

1. SPECIFICATION MIL-A-2550 APPLIES.
2. MATERIAL: ALLOY STEEL, 4140 - SPEC SAE-AMS-S-5626.
   ALTERNATIVE MATERIAL:
   ALLOY STEEL, 4130 - SPEC SAE-AMS-S-6758
   ALLOY STEEL, 4340 - SPEC SAE-AMS-S-5000
   HARDNESS REQUIREMENT RHC 26-35, PHYSICAL CONDITION: HARDENED AND TEMPERED, SURFACE CONDITION: TURNED AND POLISHED.
3. 250 ALL OVER EXCEPT AS NOTED.
4. FINAL PROTECTIVE FINISH: CADMIUM PLATING, FINISH NO. 1.1.2.3 (.0002 MIN THICK) OF MIL-STD-171(MR). WITHIN FOUR HOURS AFTER PLATING, PART SHALL BE HEATED TO 375±25F FOR EIGHT HOURS MINIMUM.
5. STAMP OR ENGRAVE PART NO.8593013 ON THIS SURFACE PRIOR TO APPLICATION OF PROTECTIVE FINISH.
6. NUMBERS TO BE .062 HIGH X .010 MAX DEEP. ALL FIGURES SHALL BE UNIFORM, CLEAR AND LEGIBLE.
7. QUALITY REQUIREMENTS: THE PRODUCT AS RECEIVED BY THE PURCHASER SHALL BE UNIFORM IN QUALITY AND CONDITION, SOUND, FREE FROM ALL DETRIMENTAL IMPERFECTIONS. ROLLING DEFECTS LIKE SEAMS, LAPS, CRACKS, AND TEARS SHOULD NOT BE PRESENT AFTER REMOVAL OF ADEQUATE MATERIAL FROM STOCK. ONLY STEELS, CONFORMING TO AIRCRAFT QUALITY MATERIALS PER AMS 2301, WITH A MAXIMUM AVERAGE FREQUENCY (F) OF 0.34 AND AN AVERAGE SEVERITY (S) RATING OF 0.25 SHALL BE USED. FINISHED SURFACE SHALL BE FREE OF ANY TOOL MARKS OR OTHER DEFECTS.
8. REFER TO MIL-I-46559 PARAGRAPH 4.5.2.1 OR MIL-I-14802 PARAGRAPH 4.3.2.6 FOR CRITICAL AND MAJOR CHARACTERISTICS.

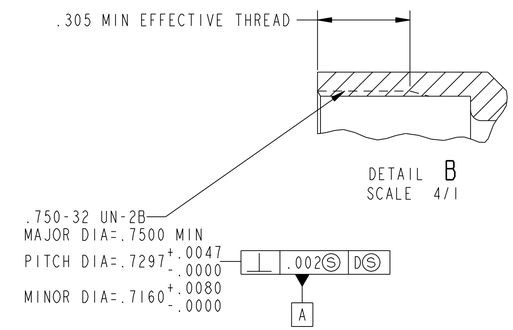

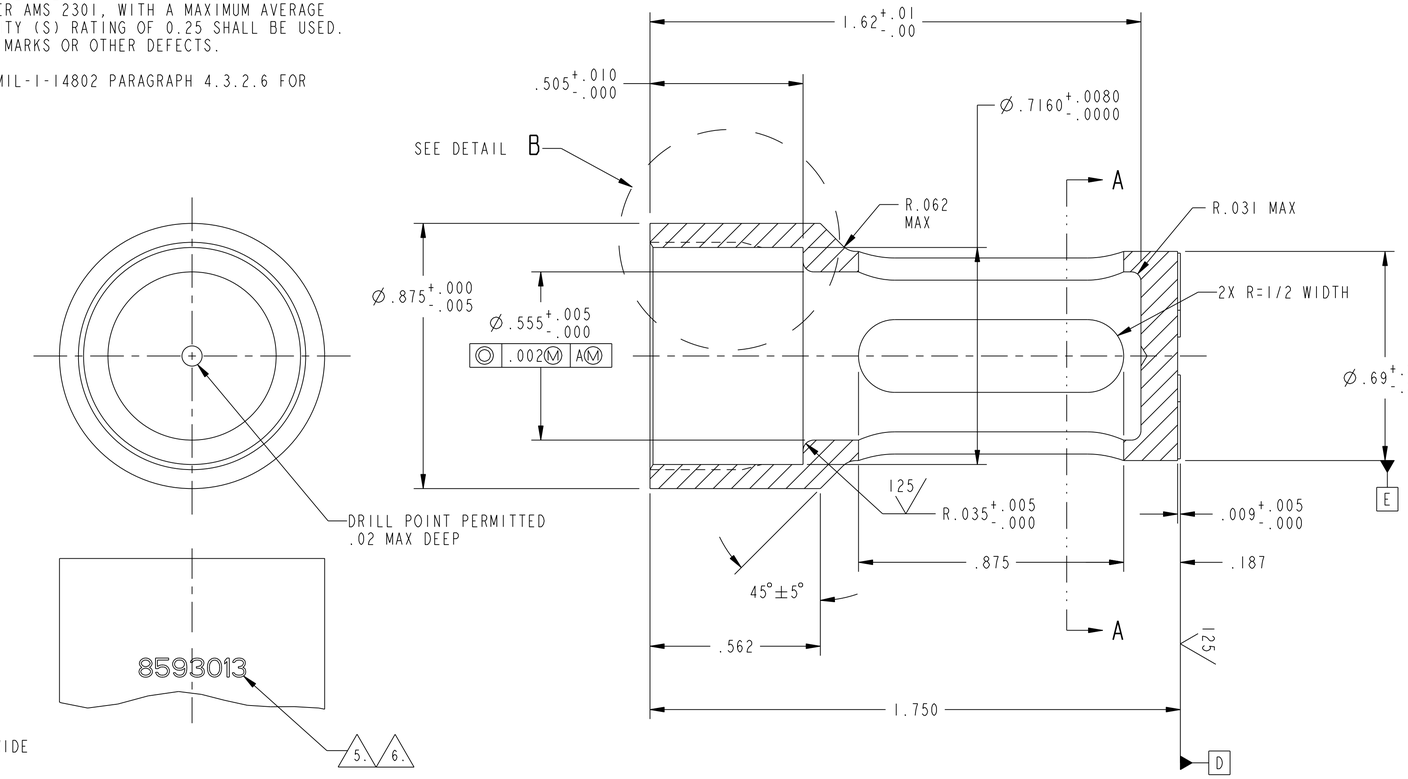

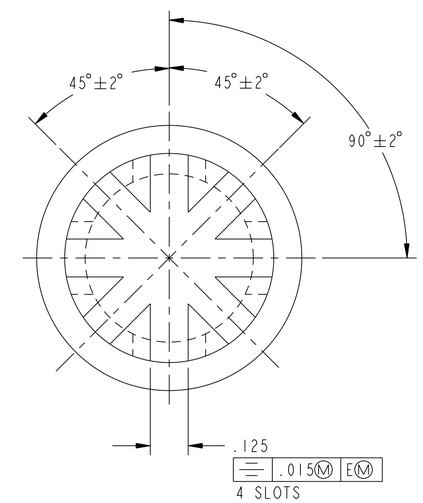

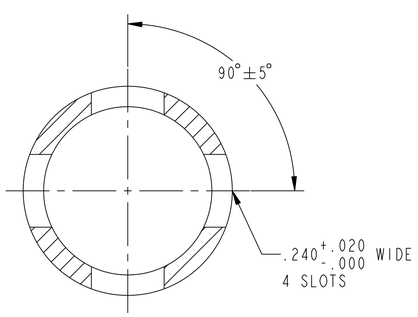

SECTION A-A

DISTRIBUTION STATEMENT C:
DISTRIBUTION AUTHORIZED TO U.S. GOVERNMENT AGENCIES AND THEIR CONTRACTORS, ADMINISTRATIVE OR OPERATIONAL USE, 4-10-91. OTHER REQUESTS FOR THIS DOCUMENT SHALL BE REFERRED TO COMMANDING OFFICER, NAVAL ORDNANCE STATION, INDIAN HEAD, MD 20640-5000.

SEE ENGINEERING RECORDS	
NEXT ASSY	USED ON
APPLICATION	

UNLESS OTHERWISE SPECIFIED DIMENSIONS ARE IN INCHES
GENERAL TOLERANCES
XX DECIMALS ± —
XXX DECIMALS ± 0.015
ANGLES ± —
MATERIAL: 2.
DO NOT SCALE DRAWING

INDIAN HEAD DIVISION
NAVAL SURFACE WARFARE CENTER
INDIAN HEAD, MD 20640-5035

ENGINEER		
ENGINEER		
CHECKED		
DRAWN		
APPROVED FOR		DATE

AUTHENTICATED 3/5/56

CURRENT DESIGN ACTIVITY CAGE CODE 14083
DEPARTMENT OF THE NAVY
NAVAL SURFACE WARFARE CENTER
INDIAN HEAD DIVISION
INDIAN HEAD, MARYLAND 20640-5035

PROCUREMENT AND PRODUCTION DIRECTORATE
U.S. ARMY
FRANKFORD ARSENAL

RETAINER, CARTRIDGE

SIZE	CAGE CODE	DRAWING NUMBER
D	19200	8593013
SCALE: NONE		SHEET 1 OF 1

CLASSIFICATION OF CHARACTERISTICS (DOD-STD-2101)	
CRITICAL-	NONE
MAJOR-	NONE
MINOR-	ALL CHARACTERISTICS

FOR PROCUREMENT: N00104-15-N-B125 - 2/2/2015

REVISIONS

REV	DESCRIPTION	DATE	APPROVAL
G	REDRAWN WITH CHANGE SEE ECP 09E215A010DBR1	2012/02/15	

CAD MAINTAINED, CHANGES SHALL BE INCORPORATED BY THE DESIGN ACTIVITY

NOTES:

1. SPECIFICATION MIL-A-2550 APPLIES.
2. MATERIAL: ALLOY STEEL, 4140 - SPEC SAE-AMS-S-5626
   ALTERNATIVE MATERIAL:
   ALLOY STEEL, 4130 - SPEC SAE-AMS-S-6758
   ALLOY STEEL, 4340 - SPEC SAE-AMS-S-5000
   HARDNESS REQUIREMENT RHC 33-38, PHYSICAL CONDITION: HARDENED AND TEMPERED, SURFACE CONDITION: TURNED AND POLISHED.
3. 250 ALL OVER EXCEPT AS NOTED.
4. FINAL PROTECTIVE FINISH: CADMIUM PLATING, FINSIH NO. 1.1.2.2 (.0003 MIN THICK) OF MIL-STD-171(MR). WITHIN FOUR HOURS AFTER PLATING, PART SHALL BE HEATED TO 375±25F FOR EIGHT HOURS MINIMUM.
5. STAMP OR ENGRAVE PART NO. 8593014 ON THIS SURFACE PRIOR TO APPLICATION OF PROTECTIVE FINISH.
6. NUMBERS TO BE .062 HIGH X .010 MAX DEEP. ALL FIGURES SHALL BE UNIFORM, CLEAR AND LEGIBLE.
7. QUALITY REQUIRMENTS: THE PRODUCT AS RECEIVED BY THE PURCHASER SHALL BE UNIFORM IN QUALITY AND CONDITION, SOUND, FREE FROM ALL DETRIMENTAL IMPERFECTIONS. ROLLING DEFECTS LIKE SEAMS, LAPS, CRACKS, AND TEARS SHOULD NOT BE PRESENT AFTER REMOVAL OF ADEQUATE MATERIAL FROM STOCK. ONLY STEELS, CONFORMING TO AIRCRAFT QUALITY MATERIALS PER AMS 2301, WITH A MAXIMUM AVERAGE FREQUENCY (F) OF 0.34 AND AN AVERAGE SEVERITY (S) RATING OF 0.25 SHALL BE USED. FINISHED SURFACE SHALL BE FREE OF ANY TOOL MARKS OR OTHER DEFECTS.
8. REFER TO MIL-I-46559 PARAGRAPH 4.5.2.2 OR MIL-I-14802 PARAGRAPH 4.3.2.7 FOR CRITICAL AND MAJOR CHARACTERISTICS.

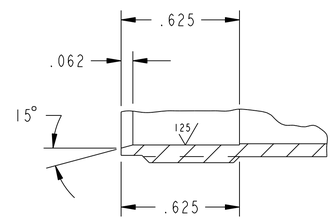

SECTION A-A

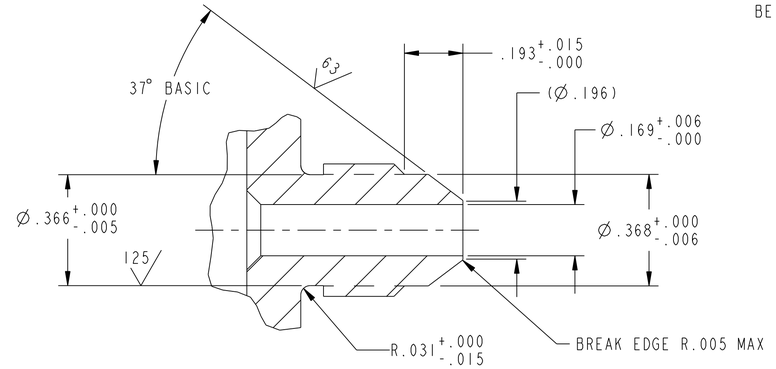

DETAIL B
SCALE 4/1

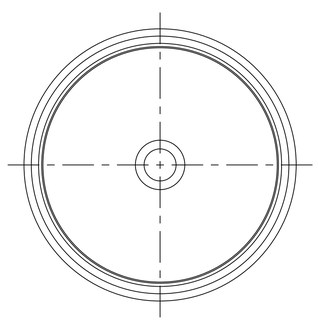

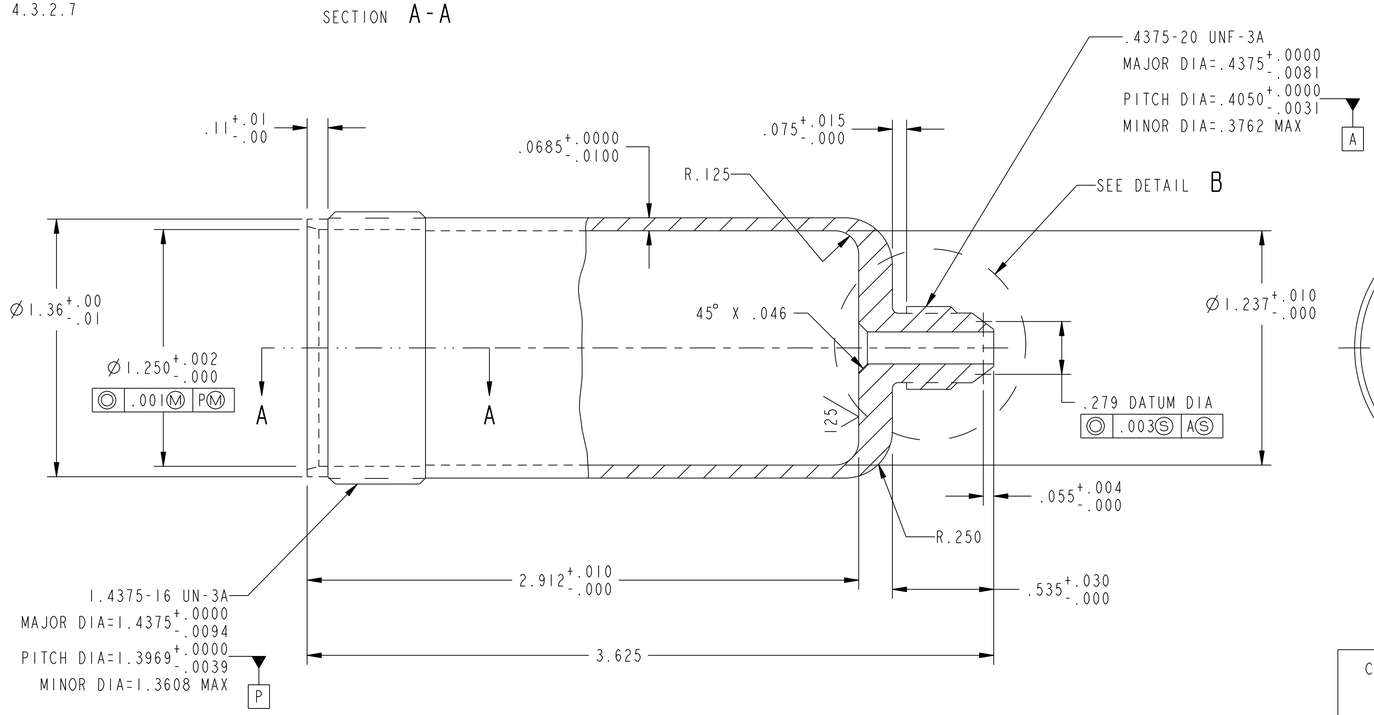

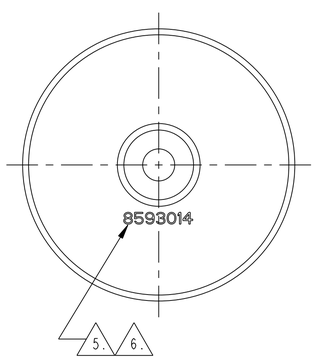

CURRENT DESIGN ACTIVITY CAGE CODE 14083
DEPARTMENT OF THE NAVY
NAVAL SURFACE WARFARE CENTER
INDIAN HEAD DIVISION
INDIAN HEAD, MARYLAND 20640-5035

SEE ENGINEERING RECORDS	
NEXT ASSY	USED ON
APPLICATION	

UNLESS OTHERWISE SPECIFIED DIMENSIONS ARE IN INCHES
GENERAL TOLERANCES
XX DECIMALS ± —
XXX DECIMALS ± 0.015
ANGLES ± 5.0°
MATERIAL: 2.
DO NOT SCALE DRAWING

INDIAN HEAD DIVISION
NAVAL SURFACE WARFARE CENTER
INDIAN HEAD, MD 20640-5035

ENGINEER		
ENGINEER		
CHECKED		
DRAWN		
APPROVED FOR		DATE

AUTHENTICATED 3/5/56

PROCUREMENT AND PRODUCTION DIRECTORATE
U.S. ARMY
FRANKFORD ARSENAL

CHAMBER, INITIATOR

SIZE	CAGE CODE	DRAWING NUMBER
D	19200	8593014
SCALE: NONE		SHEET 1 OF 1

CLASSIFICATION OF CHARACTERISTICS (DOD-STD-2101)	
CRITICAL-	5
MAJOR-	8
MINOR-	ALL OTHER CHARACTERISTICS

FOR PROCUREMENT: N00104-15-N-B125 - 2/2/2015

REVISIONS			
REV	DESCRIPTION	DATE	APPROVAL
G	← →	11-14-60	—
H	REDRAWN AND REVISED E.O. NO.P50062	6-9-65	—
J3	E.O. NO. P60077	4-7-66	—
K	E.O. NO. P60304	3-3-67	—
L	E.O. NO. P70131	9-29-67	—
M	(1-2) E.O. NO. P70175	3-12-68	—
N	ERR NO.P00075	2-21-75	—
P	SEE NOR 8594157-P	6/14/90	T.G.B.
R	SEE ECP 09E215A008DB	2011/03/01	[illegible]
T	SEE ECP 11E25BW024	7/1/11	[illegible]

CAD MAINTAINED, CHANGES SHALL BE INCORPORATED BY THE DESIGN ACTIVITY

NOTES:

(C5) 1. MARK WITH TYPE I, BLACK NO.37038 STENCIL INK, SPEC A-A-208: CARTRIDGE DESIGNATION, LOT NO. PER MIL-STD-1168. MARKING NOT TO EXCEED 270° OF PERIPHERY. ALL LETTERS AND NUMBERS TO BE 8 POINT MEDIUM GOTHIC UPPER CASE.

(M105) 2. COAT MARKING WITH MOISTURE AND FUNGUS-RESISTANT VARNISH, FIND NO. 8.

(M106) 3. JUNCTION OF TOP EDGE OF PRIMER AND POCKET TO BE SEALED WITH EPOXY, FIND NO. 5, [AND CRIMPED 360°].

4. CRIMP CARTRIDGE TO INSURE A SEAL CAPABLE OF WITHSTANDING 14 P.S.I. INTERNAL-EXTERNAL PRESSURE DIFFERENTIAL WITH A MAXIMUM PERMISSIBLE LEAK RATE OF 1×10^{-4} CC/SEC.

5. DELETED.

6. THE BLACK POWDER, FIND NO. 7, AND PROPELLANT, FIND NO. 6, WEIGHTS GIVEN ARE APPROXIMATE AND SHALL BE ADJUSTED TO PRODUCE THE SPECIFIED BALLISTIC REQUIREMENT.

7. IGNITION DEVICE, PVU-7/A, FIND NO. 4, SHALL BE USED, ANVIL LEGS TO BE FULLY SEATED ON THE BOTTOM OF THE IGNITION DEVICE POCKET AND THE CROWN OF THE IGNITION DEVICE CUP SHALL BE .003 TO .008 INCH BELOW FLUSH WITH SURFACE "S".

8. APPLY SEALANT, FIND NO. 3, BETWEEN THE CARTRIDGE HEAD, FIND NO. 2, AND CASE, FIND NO. 1, FOR THE ENTIRE LENGTH (360°) BEFORE CURL CRIMPING. THE PROPELLANT CAVITY MUST BE KEPT FREE OF SEALANT.

9. AFTER CURL CRIMPING, WIPE EXCESS SEALANT INTO THE VOID AT THE JUNCTION OF THE CURLED EDGE OF THE CARTRIDGE CASE AND HEAD FOR THE ENTIRE LENGTH (360°).

10. ALL REQUIREMENTS OF MIL-C-46618 APPLY.

11. FOR DATA LIST SEE DL8594157.

12. DELETED.

13. EACH CARTRIDGE SHALL BE IDENTIFIED WITH A UNIQUE SERIAL NUMBER, IN CONSECUTIVE ORDER BEGINNING WITH 001. MARKING SHALL BE PERMANENT, LEGIBLE PEN OR INK STAMPED ON THE CARTRIDGE WITH APPROXIMATELY .125 INCH HIGH CHARACTERS.

(C1) 14. ALL PARTS SHALL BE PRESENT.

(C2) 15. ALL PARTS SHALL BE ASSEMBLED AS SHOWN IN DRAWING.

(C3) 16. AMMUNITION LOTS SHALL BE HOMOGENEOUS FOR ENTIRE LOT OF CARTRIDGES.

(C4) 17. METALS SHALL BE FREE OF ALL DEFECTS.

(M107) 18. THERE SHALL BE NO FOREIGN MATTER PRESENT IN OR ON PARTS.

(M108) 19. CARTRIDGE SHALL BE FREE OF ALL BURRS.

20. INTERPRET DRAWING IN ACCORDANCE WITH ASME Y14.5M-1994 AND ASME Y14.100-2004 WITH APPENDICES B-E.

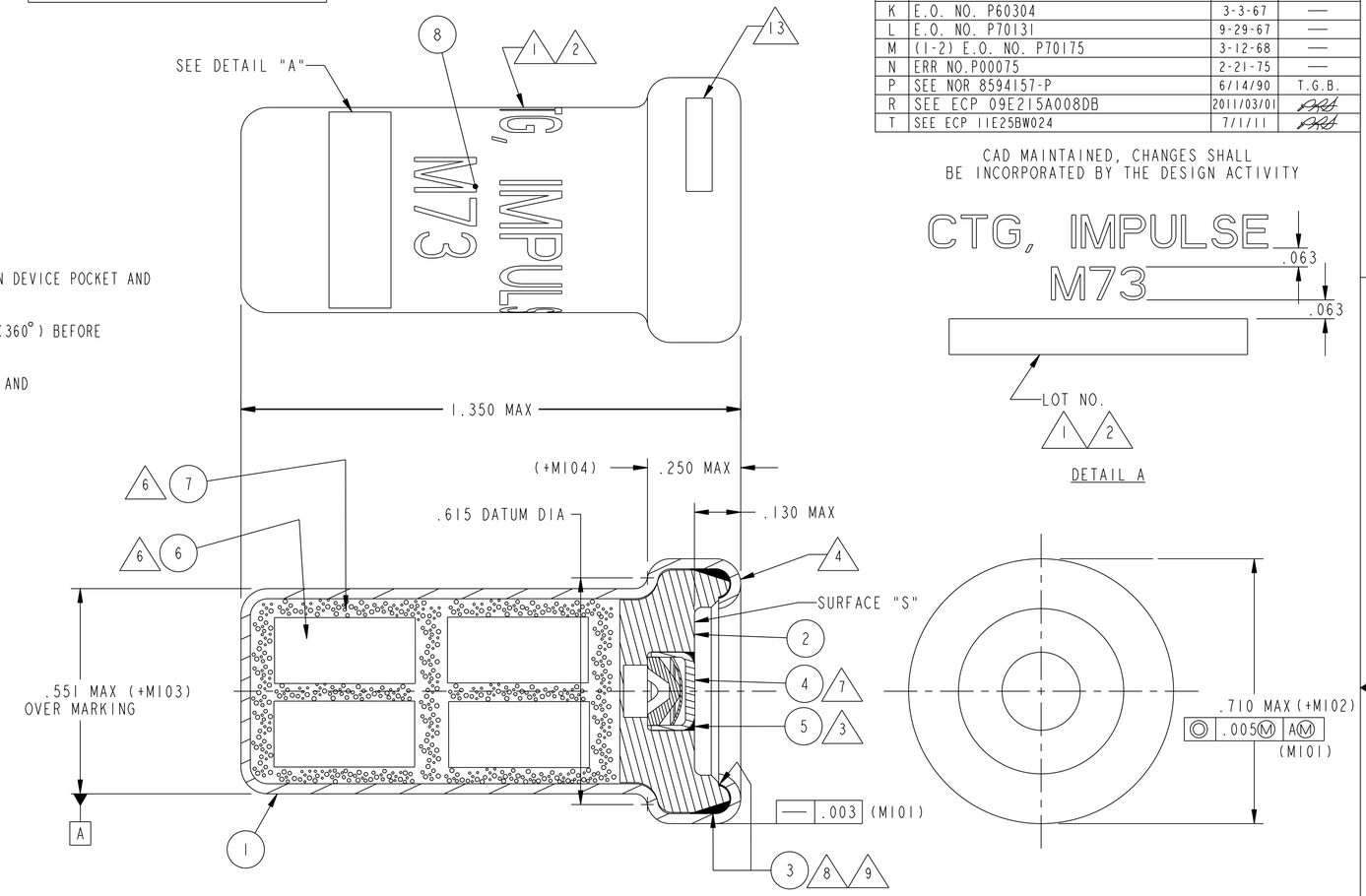

FIND NO	QTY REQ	CAGE CODE	PART OR IDENTIFYING NUMBER	SPECIFICATION NUMBER	NOMENCLATURE OR DESCRIPTION	MATERIAL OR NOTE
8	AR			MIL-V-173	VARNISH, MOISTURE AND FUNGUS RESISTANT	
7	29 GRAINS			MIL-P-223	BLACK POWDER CLASS 5	
6	40 GRAINS		10534817		PROPELLANT	
5	AR		707AS114		EPOXY, RESIN	
4	1		851AS500		IGNITION DEVICE PVU-7/A	
3	AR		10523453		SEALANT	
2	1		8594159		HEAD, CARTRIDGE	
1	1		8594158		CASE, CARTRIDGE	

PARTS LIST

SEE ENGINEERING RECORDS	
NEXT ASSY	USED ON
APPLICATION	

UNLESS OTHERWISE SPECIFIED DIMENSIONS ARE IN INCHES
GENERAL TOLERANCES
XX DECIMALS ± —
XXX DECIMALS ± —
ANGLES ± —
MATERIAL: —
DO NOT SCALE DRAWING

INDIAN HEAD DIVISION
NAVAL SURFACE WARFARE CENTER
INDIAN HEAD, MD 20640-5035

ENGINEER
ENGINEER
CHECKED
DRAWN
APPROVED FOR — DATE

AUTHENTICATED 6/19/57

DEPARTMENT OF THE ARMY
U.S. ARMY
FRANKFORD ARSENAL

CARTRIDGE, IMPULSE, M73 ASSEMBLY

SIZE	CAGE CODE	DRAWING NUMBER
D	19200	8594157

SCALE: NONE — SHEET 1 OF 1

DISTRIBUTION STATEMENT C: Distribution authorized to U.S. Government agencies and their contractors administrative or operational use, 10-29-08. Other requests for this document shall be referred to Commander, Indian Head Division, Naval Surface Warfare Center, Indian Head, MD 20640-5035.

CLASSIFICATION OF CHARACTERISTICS (DOD-STD-2101)	
CRITICAL-	NONE
MAJOR-	NONE
MINOR-	ALL CHARACTERISTICS

FOR PROCUREMENT: N00104-15-N-B125 - 2/2/2015

REVISIONS			
REV	DESCRIPTION	DATE	APPROVAL
H	REDRAWN WITH CHANGE SEE ECP 09E215A010DBR1	2012/02/15	

CAD MAINTAINED, CHANGES SHALL BE INCORPORATED BY THE DESIGN ACTIVITY

NOTES:

1. SPECIFICATION MIL-A-2550 APPLIES.
2. MATERIAL: LABEL SHALL BE IN ACCORDANCE WITH TYPE I, SPEC MIL-DTL-19834 EXCEPT THAT LABEL SIZE SHALL COMPLY WITH DIMENSIONS SPECIFIED ON DRAWING. BACKGROUND TO BE RED NO. 11105 - FED-STD-NO.595. CHARACTERS, MARKING PADS, AND BORDER SHALL BE NATURAL COLOR.
3. ARRANGEMENT OF INFORMATION ON LABEL MUST BE AS SHOWN ON DRAWING.
4. SIZE OF ALL LETTERS AND FIGURES MUST BE AS FOLLOWS:

   8 POINT MEDIUM GOTHIC - INITIATOR, M3A2; EXPLOSIVE DEVICE.
   6 POINT MEDIUM GOTHIC - ALL OTHERS.

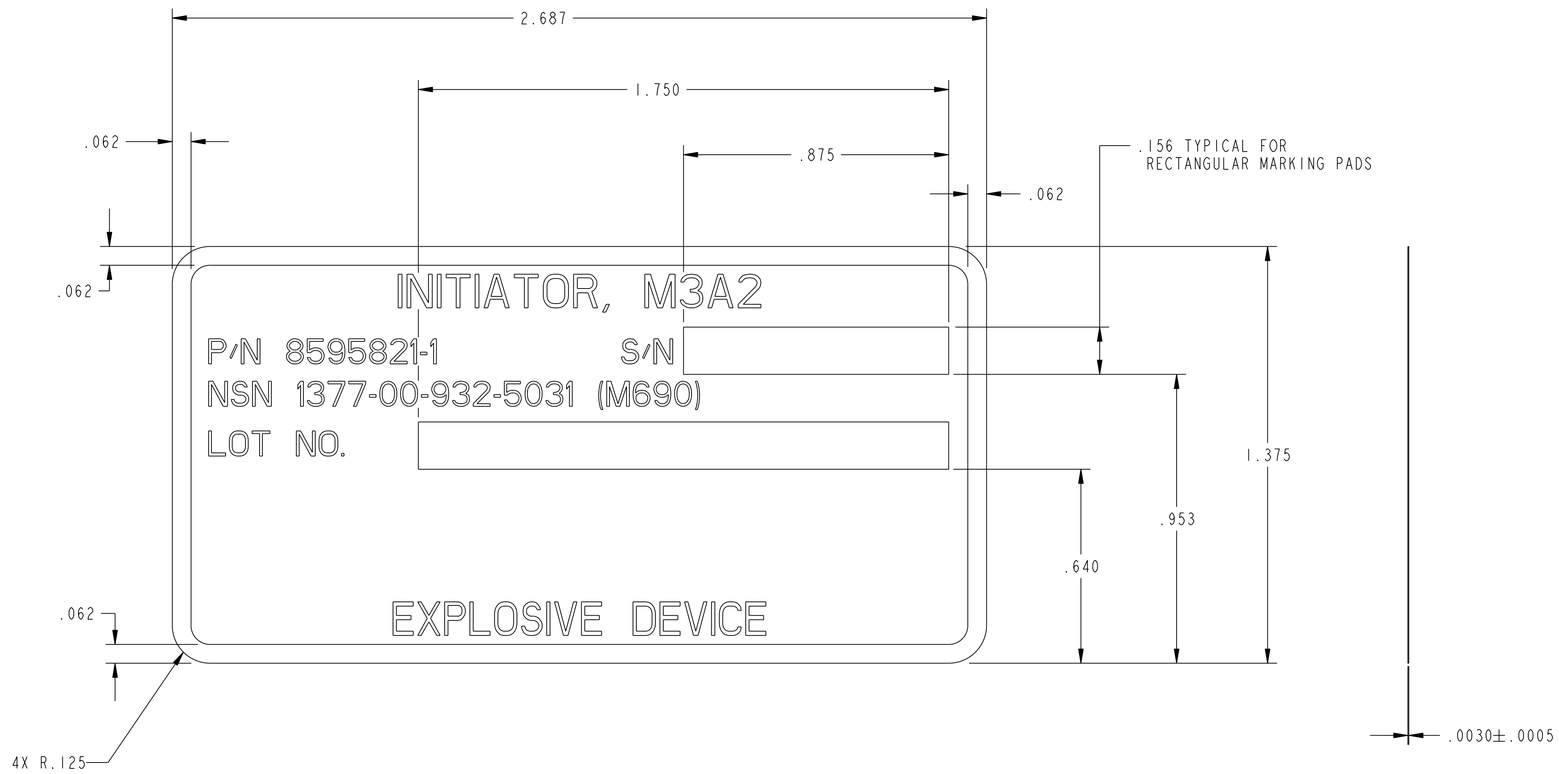

DISTRIBUTION STATEMENT C:
DISTRIBUTION AUTHORIZED TO U.S. GOVERNMENT AGENCIES AND THEIR CONTRACTORS, ADMINISTRATIVE OR OPERATIONAL USE, 4-10-91. OTHER REQUESTS FOR THIS DOCUMENT SHALL BE REFERRED TO COMMANDING OFFICER, NAVAL ORDNANCE STATION, INDIAN HEAD, MD 20640-5000.

SEE ENGINEERING RECORDS	
NEXT ASSY	USED ON
APPLICATION	

UNLESS OTHERWISE SPECIFIED DIMENSIONS ARE IN INCHES
GENERAL TOLERANCES
XX DECIMALS ± —
XXX DECIMALS ± 0.015
ANGLES ± —
MATERIAL: 2.
DO NOT SCALE DRAWING

INDIAN HEAD DIVISION
NAVAL SURFACE WARFARE CENTER
INDIAN HEAD, MD 20640-5035

ENGINEER		
ENGINEER		
CHECKED		
DRAWN		
APPROVED FOR		DATE

AUTHENTICATED 5/15/59

CURRENT DESIGN ACTIVITY CAGE CODE 14083
DEPARTMENT OF THE NAVY
NAVAL SURFACE WARFARE CENTER
INDIAN HEAD DIVISION
INDIAN HEAD, MARYLAND 20640-5035

US ARMY
FRANKFORD ARSENAL

LABEL, IDENTIFICATION

SIZE	CAGE CODE	DRAWING NUMBER
D	19200	8594265

SCALE: NONE | SHEET 1 OF 1

CLASSIFICATION OF CHARACTERISTICS (DOD-STD-2101)	
CRITICAL-	NONE
MAJOR-	NONE
MINOR-	ALL CHARACTERISTICS

FOR PROCUREMENT: N00104-15-N-B125 - 2/2/2015

REVISIONS

REV	DESCRIPTION	DATE	APPROVAL
G	REDRAWN WITH CHANGE SEE ECP 09E215A010DBR1	2012/02/15	

CAD MAINTAINED, CHANGES SHALL BE INCORPORATED BY THE DESIGN ACTIVITY

NOTES:

1. SPECIFICATION MIL-A-2550 APPLIES.
2. MATERIAL: ALLOY STEEL, 4140 - SPEC SAE-AMS-S-5626. ALTERNATIVE MATERIALS:
   ALLOY STEEL, 4130 - SPEC SAE-AMS-S-6758
   ALLOY STEEL, 4340 - SPEC SAE-AMS-S-5000
   HARDNESS REQUIREMENT RHC 38-42, PHYSICAL CONDITION: HARDENED AND TEMPERED, SURFACE CONDITION: TURNED AND POLISHED.
3. 125 ALL OVER EXCEPT AS NOTED.
4. FINAL PROTECTIVE FINISH: CADMIUM PLATING, FINISH NO 1.1.2.2. (.0003 MIN THICK) OF MIL-STD-171(MR). WITHIN FOUR HOURS AFTER PLATING, PART SHALL BE HEATED TO 375±25F FOR EIGHT HOURS MINIMUM.
5. STAMP OR ENGRAVE PART NO. 8595403 ON THIS SURFACE PRIOR TO APPLICATION OF PROTECTIVE FINISH
6. NUMBERS TO BE .046 HIGH X .01 MAX DEEP. ALL FIGURES SHALL BE UNIFORM, CLEAR AND LEGIBLE.
7. QUALITY REQUIREMENTS: THE PRODUCT AS RECEIVED BY THE PURCHASER SHALL BE UNIFORM IN QUALITY AND CONDITION, SOUND, FREE FROM ALL DETRIMENTAL IMPERFECTIONS. ROLLING DEFECTS LIKE SEAMS, LAPS, CRACKS, AND TEARS SHOULD NOT BE PRESENT AFTER REMOVAL OF ADEQUATE MATERIAL FROM STOCK. ONLY STEELS, CONFORMING TO AIRCRAFT QUALITY MATERIALS PER AMS 2301, WITH A MAXIMUM AVERAGE FREQUENCY (F) OF 0.34 AND AN AVERAGE SEVERITY (S) RATING OF 0.25 SHALL BE USED. FINISHED SURFACE SHALL BE FREE OF ANY TOOL MARKS OR OTHER DEFECTS.
8. REFER TO MIL-I-46559 PARAGRAPH 4.5.2.3 OR MIL-I-14802 PARAGRAPH 4.3.2.4 FOR CRITICAL AND MAJOR CHARACTERISTICS.

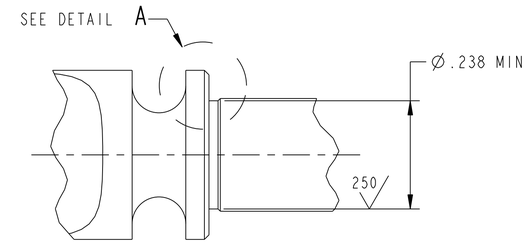

ALTERNATIVE DESIGN

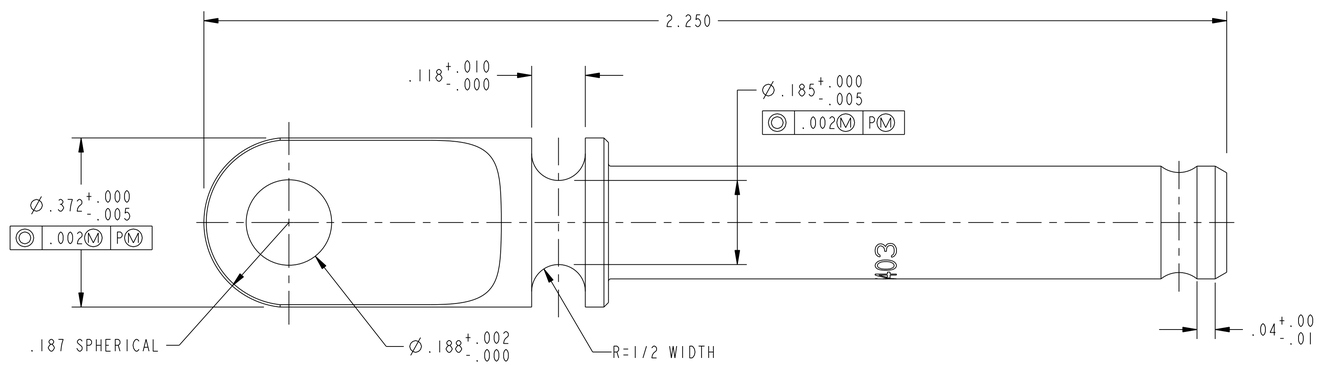

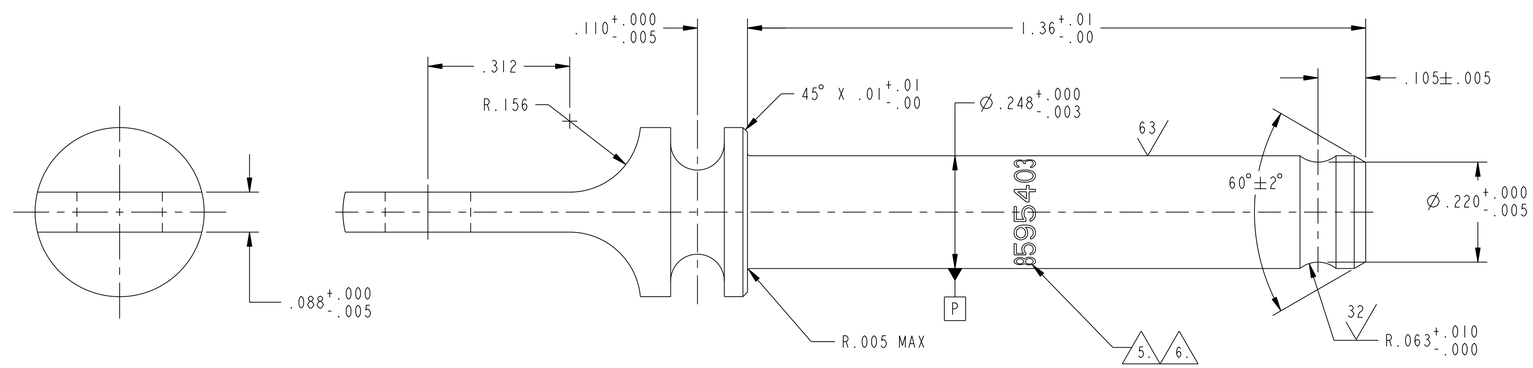

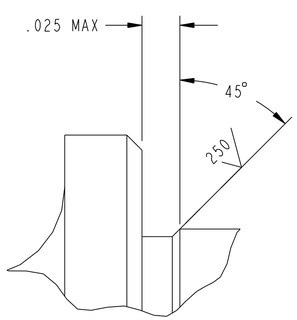

DETAIL A
SCALE 20/1

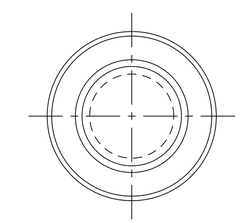

DISTRIBUTION STATEMENT C:
DISTRIBUTION AUTHORIZED TO U.S. GOVERNMENT AGENCIES AND THEIR CONTRACTORS, ADMINISTRATIVE OR OPERATIONAL USE, 4-10-91. OTHER REQUESTS FOR THIS DOCUMENT SHALL BE REFERRED TO COMMANDING OFFICER, NAVAL ORDNANCE STATION, INDIAN HEAD, MD 20640-5000.

D8595817	INITIATOR, M4, M12, M45, M49
D10520225	INITIATOR, M30, M32, M43
NEXT ASSY	USED ON
APPLICATION	

UNLESS OTHERWISE SPECIFIED DIMENSIONS ARE IN INCHES
GENERAL TOLERANCES
XX DECIMALS ± —
XXX DECIMALS ± 0.015
ANGLES ± —
MATERIAL: 2
DO NOT SCALE DRAWING

INDIAN HEAD DIVISION
NAVAL SURFACE WARFARE CENTER
INDIAN HEAD, MD 20640-5035

ENGINEER		
ENGINEER		
CHECKED		
DRAWN		
APPROVED FOR		DATE

AUTHENTICATED 1/21/89

CURRENT DESIGN ACTIVITY CAGE CODE 14083
DEPARTMENT OF THE NAVY
NAVAL SURFACE WARFARE CENTER
INDIAN HEAD DIVISION
INDIAN HEAD, MARYLAND 20640-5035

US ARMY
FRANKFORD ARSENAL

PIN, INITIATOR

SIZE	CAGE CODE	DRAWING NUMBER
D	19200	8595403

SCALE: NONE | SHEET 1 OF 1

CLASSIFICATION OF CHARACTERISTICS (DOD-STD-2101)	
CRITICAL-	NONE
MAJOR-	NONE
MINOR-	ALL CHARACTERISTICS

FOR PROCUREMENT: N00104-15-N-B125 - 2/2/2015

SH	REVISIONS			
2	REV	DESCRIPTION	DATE	APPROVAL
G	G	REDRAWN WITH CHANGE SEE ECP 09E215A010DBR1	2012/02/15	

CAD MAINTAINED, CHANGES SHALL BE INCORPORATED BY THE DESIGN ACTIVITY

NOTES:

1. SPECIFICATION MIL-A-2550 APPLIES.
2. MATERIAL: ALLOY STEEL, 4140 - SPEC SAE-AMS-S-5626.
   ALTERNATIVE MATERIAL:
   ALLOY STEEL, 4130 - SPEC SAE-AMS-S-6758
   ALLOY STEEL, 4340 - SPEC SAE-AMS-S-5000
   FORGE IN ACCORDANCE WITH GRADE A - SPEC SAE-AMS-F-7190.
   HARDNESS REQUIREMENT RHC 30-40, PHYSICAL CONDITION: HARDENED AND TEMPERED, SURFACE CONDITION: TURNED AND POLISHED.
3. 250 ALL OVER EXCEPT AS NOTED.
4. FINAL PROTECTIVE FINISH: CADMIUM PLATING, FINISH NO.1.1.2.2 (.0003 MIN THICK) OF MIL-STD-171(MR). WITHIN FOUR HOURS AFTER PLATING, PART SHALL BE HEATED TO 375±25F FOR EIGHT HOURS MINIMUM.
5. DELETED.
6. STAMP OR ENGRAVE PART NO. 8595404 ON THIS SURFACE PRIOR TO APPLICATION OF PROTECTIVE FINISH.
7. NUMBERS TO BE .062 HIGH X .010 MAX DEEP. ALL FIGURES SHALL BE UNIFORM, CLEAR AND LEGIBLE.
8. TO CENTERLINE OF Ø.103 $^{+.005}_{-.000}$ HOLES.
9. TO CENTERLINE OF Ø.250 $^{+.005}_{-.000}$ HOLES.
10. QUALITY REQUIREMENTS: THE PRODUCT AS RECEIVED BY THE PURCHASER SHALL BE UNIFORM IN QUALITY AND CONDITION, SOUND, FREE FROM ALL DETRIMENTAL IMPERFECTIONS. ROLLING DEFECTS LIKE SEAMS, LAPS, CRACKS AND TEARS SHOULD NOT BE PRESENT AFTER REMOVAL OF ADEQUATE MATERIAL FROM STOCK. ONLY STEELS, CONFORMING TO AIRCRAFT QUALITY MATERIALS PER AMS 2301, WITH A MAXIMUM AVERAGE FREQUENCY (F) OF 0.34 AND AN AVERAGE SEVERITY (S) RATING OF 0.25 SHALL BE USED. FINISHED SURFACE SHALL BE FREE OF ANY TOOL MARKS OR OTHER DEFECTS.
11. REFER TO MIL-I-46559 PARAGRAPH 4.5.2.4 OR MIL-I-14802 PARAGRAPH 4.3.2.5 FOR CRITICAL AND MAJOR CHARACTERISTICS.

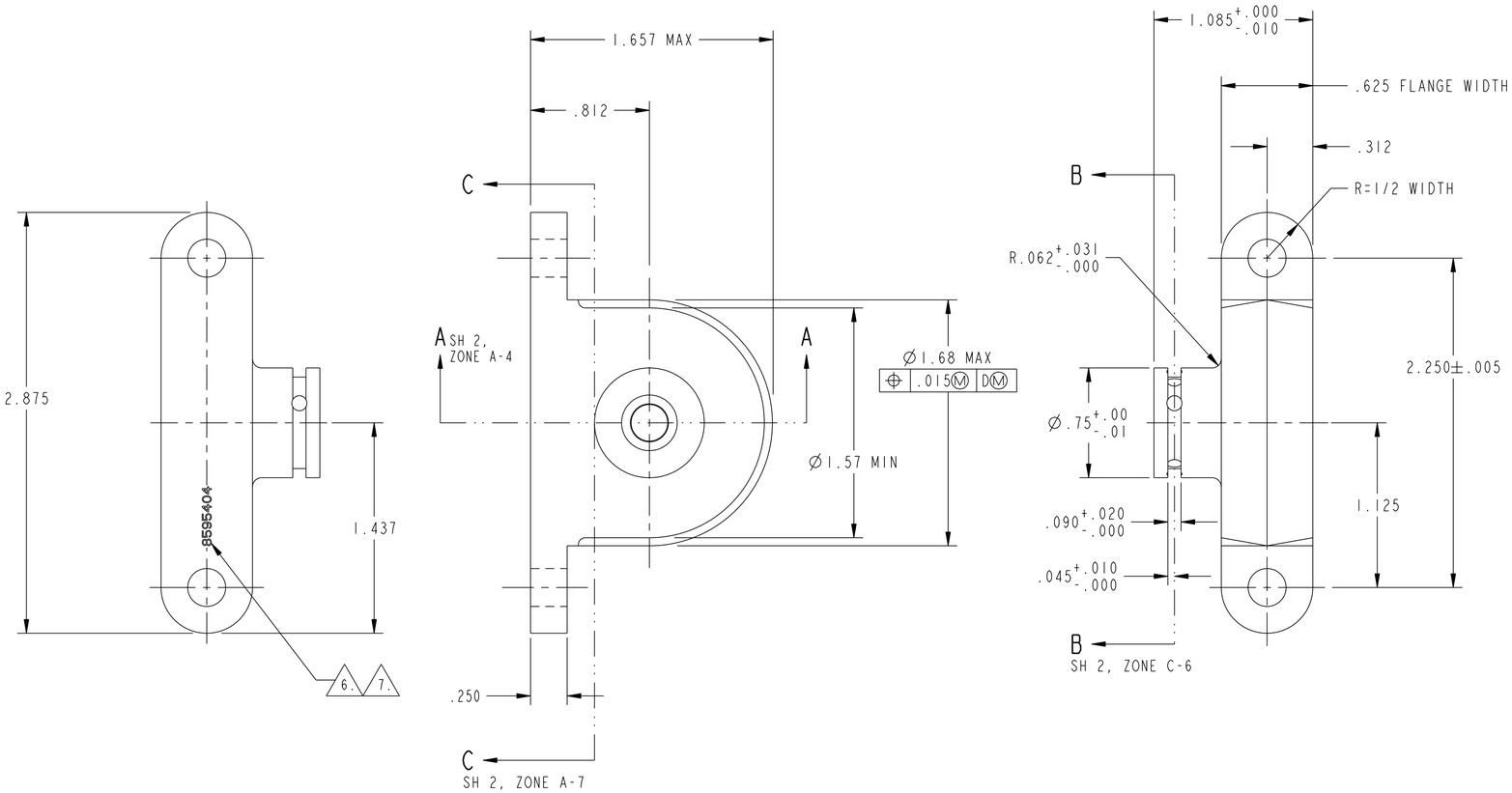

DISTRIBUTION STATEMENT C:
DISTRIBUTION AUTHORIZED TO U.S. GOVERNMENT AGENCIES AND THEIR CONTRACTORS, ADMINISTRATIVE OR OPERATIONAL USE, 4-10-91. OTHER REQUESTS FOR THIS DOCUMENT SHALL BE REFERRED TO COMMANDING OFFICER, NAVAL ORDNANCE STATION, INDIAN HEAD, MD 20640-5000.

D10520225	INITIATOR, M30, M32, M43
D8595817	INITIATOR, M4, M12, M45, M49
SEE ENGINEERING RECORDS	
NEXT ASSY	USED ON
APPLICATION	

UNLESS OTHERWISE SPECIFIED DIMENSIONS ARE IN INCHES
GENERAL TOLERANCES
XX DECIMALS ± —
XXX DECIMALS ± 0.015
ANGLES ± —
MATERIAL: 2.
DO NOT SCALE DRAWING

INDIAN HEAD DIVISION
NAVAL SURFACE WARFARE CENTER
INDIAN HEAD, MD 20640-5035

ENGINEER		
ENGINEER		
CHECKED		
DRAWN		
APPROVED FOR		DATE

AUTHENTICATED 1/21/59

CURRENT DESIGN ACTIVITY CAGE CODE 14083
DEPARTMENT OF THE NAVY
NAVAL SURFACE WARFARE CENTER
INDIAN HEAD DIVISION
INDIAN HEAD, MARYLAND 20640-5035

COMPONENTS ENGINEERING DIRECTORATE
US ARMY
FRANKFORD ARSENAL

CAP

SIZE	CAGE CODE	DRAWING NUMBER
D	19200	8595404
SCALE: NONE		SHEET 1 OF 2

FOR PROCUREMENT: N00104-15-N-B125 - 2/2/2015

REVISIONS			
REV	DESCRIPTION	DATE	APPROVAL
G	REDRAWN WITH CHANGE SEE ECP 09E215A010DBR1	2012/02/15	

CAD MAINTAINED, CHANGES SHALL BE INCORPORATED BY THE DESIGN ACTIVITY

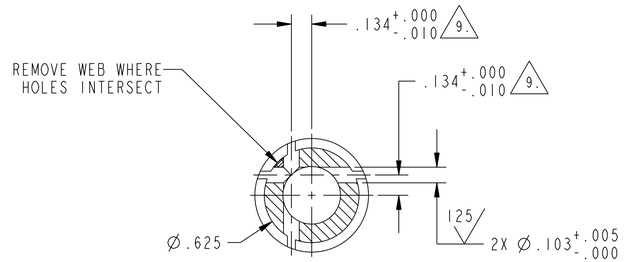

SECTION B-B
FROM SH 1, ZONE B-2

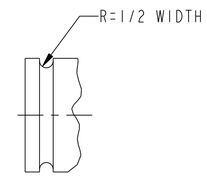

ALTERNATIVE DESIGN

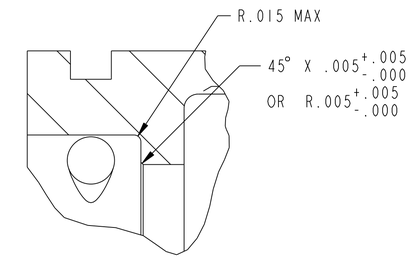

DETAIL D
SCALE 6/1

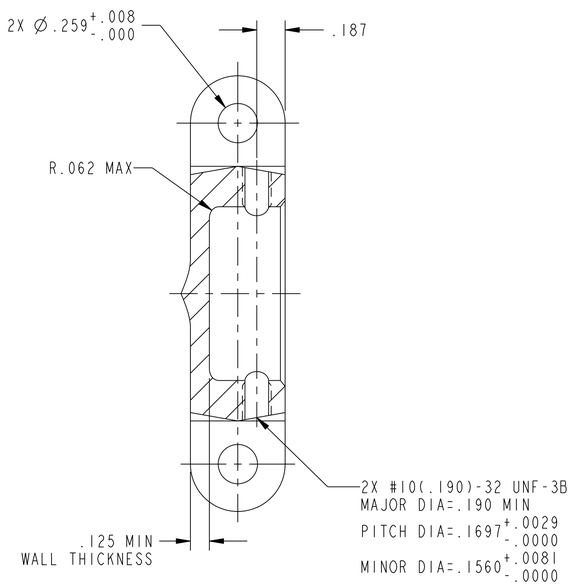

SECTION C-C
FROM SH 1, XONE A-4

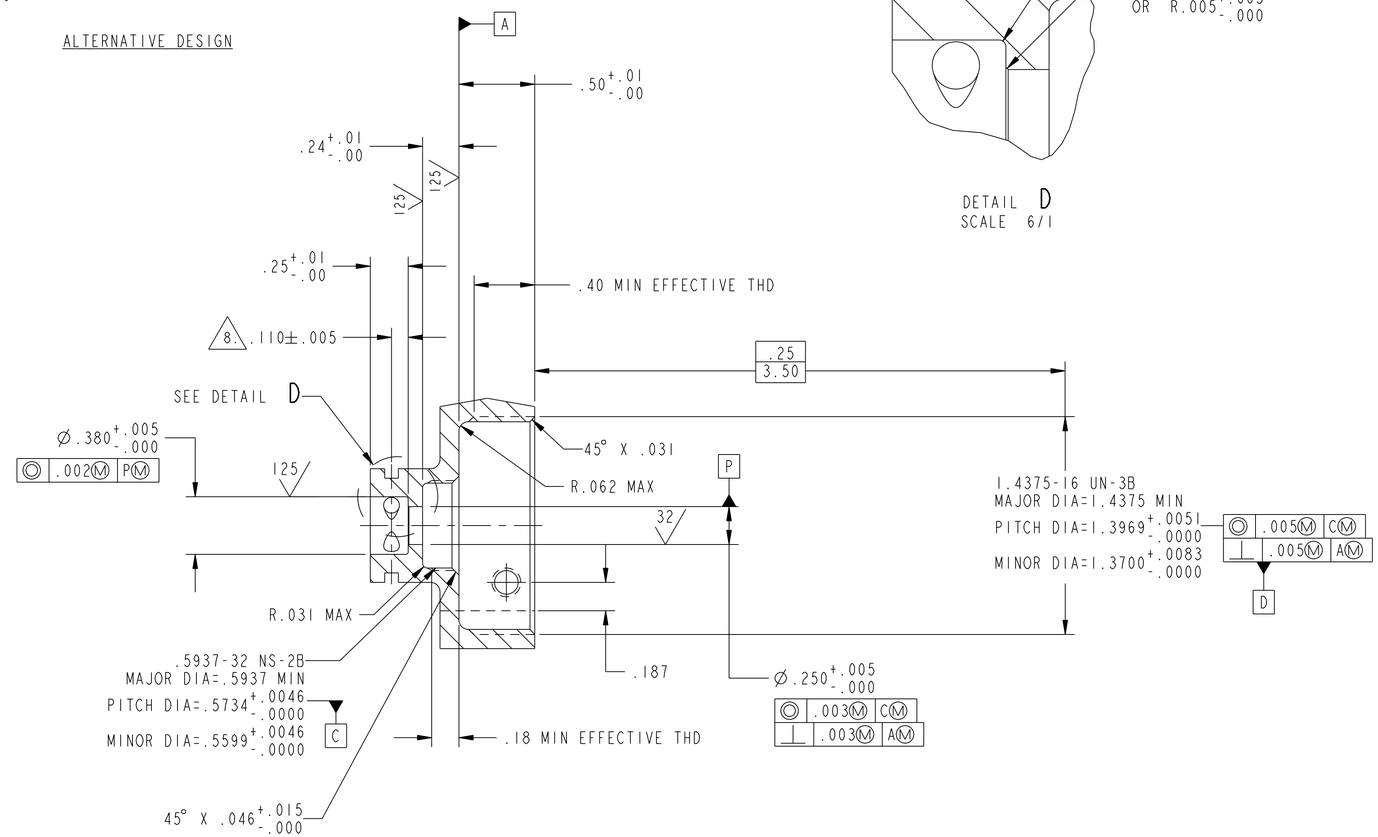

SECTION A-A
FROM SH 1, ZONE C-4

SIZE	CAGE CODE	DRAWING NUMBER
D	19200	8595404
SCALE: NONE		SHEET 2 OF 2

CLASSIFICATION OF CHARACTERISTICS (DOD-STD-2101)	
CRITICAL-	NONE
MAJOR-	NONE
MINOR-	ALL CHARACTERISTICS

FOR PROCUREMENT: N00104-15-N-B125 - 2/2/2015

REVISIONS

REV	DESCRIPTION	DATE	APPROVAL
F	REDRAWN WITH CHANGE SEE ECP 09E215A010DBR1	2012/02/15	

CAD MAINTAINED, CHANGES SHALL BE INCORPORATED BY THE DESIGN ACTIVITY

NOTES:

1. SPECIFICATION MIL-A-2550 APPLIES.
2. MATERIAL: WIRE, SPRING STEEL (MUSIC) - SPEC ASTM A 228/A 228M.
3. FINAL PROTECTIVE FINISH: CADMIUM PLATING, FINISH NO. 1.1.2.2. (.0003 MIN THICK) OF MIL-STD-171(ORD). WITHIN FOUR HOURS AFTER PLATING, PART SHALL BE HEATED TO 375F±25F FOR EIGHT HOURS MINIMUM.
4. REFER TO MIL-I-46559 PARAGRAPH 4.5.2.5 OR MIL-I-14802 PARAGRAPH 4.3.2.13 FOR CRITICAL AND MAJOR CHARACTERISTICS.

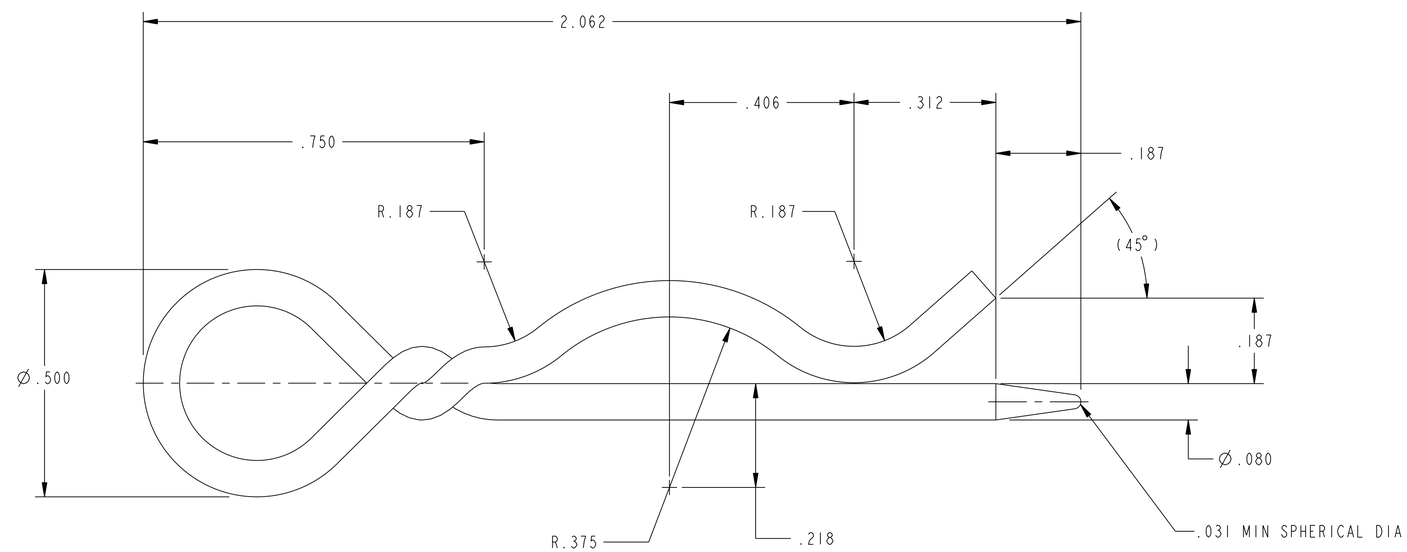

DISTRIBUTION STATEMENT C:
DISTRIBUTION AUTHORIZED TO U.S. GOVERNMENT AGENCIES AND THEIR CONTRACTORS, ADMINISTRATIVE OR OPERATIONAL USE, 4-10-91. OTHER REQUESTS FOR THIS DOCUMENT SHALL BE REFERRED TO COMMANDING OFFICER, NAVAL ORDNANCE STATION, INDIAN HEAD, MD 20640-5000.

NEXT ASSY	USED ON
D8595817	INITIATOR, M4, M12, M45, M49
SEE ENGINEERING RECORDS	
APPLICATION	

UNLESS OTHERWISE SPECIFIED DIMENSIONS ARE IN INCHES
GENERAL TOLERANCES
XX DECIMALS ± —
XXX DECIMALS ± 0.015
ANGLES ± —
MATERIAL: 2.
DO NOT SCALE DRAWING

INDIAN HEAD DIVISION
NAVAL SURFACE WARFARE CENTER
INDIAN HEAD, MD 20640-5035

ENGINEER		
ENGINEER		
CHECKED		
DRAWN		
APPROVED FOR		DATE

AUTHENTICATED 1/21/59

CURRENT DESIGN ACTIVITY CAGE CODE 14083
DEPARTMENT OF THE NAVY
NAVAL SURFACE WARFARE CENTER
INDIAN HEAD DIVISION
INDIAN HEAD, MARYLAND 20640-5035

INDUSTRIAL GROUP ORDNANCE CORPS
DEPT OF THE ARMY
FRANKFORD ARSENAL

PIN, SAFETY

SIZE	CAGE CODE	DRAWING NUMBER
D	00000	8595405
SCALE: NONE		SHEET 1 OF 1

CLASSIFICATION OF CHARACTERISTICS (DOD-STD-2101)	
CRITICAL-	NONE
MAJOR-	NONE
MINOR-	ALL CHARACTERISTICS

FOR PROCUREMENT: N00104-15-N-B125 - 2/2/2015

REVISIONS

REV	DESCRIPTION	DATE	APPROVAL
G	REDRAWN WITH CHANGE SEE ECP 09E215A010DBR1	2012/02/15	

CAD MAINTAINED, CHANGES SHALL BE INCORPORATED BY THE DESIGN ACTIVITY

NOTES:

1. SPECIFICATION MIL-A-2550 APPLIES.
2. MATERIAL: WIRE, SPRING STEEL (MUSIC)-SPEC ASTM A 228/A 228M.
3. FINAL PROTECTIVE FINISH: CADMIUM PLATING, FINISH NO.1.1.2.3 (.0002 MIN THICK) OF MIL-STD-171 (ORD). WITHIN FOUR HOURS AFTER PLATING, PART SHALL BE HEATED TO 375F±25F FOR EIGHT HOURS MINIMUM.
4. REFER TO MIL-I-46559 PARAGRAPH 4.5.2.6 OR MIL-I-14802 PARAGRAPH 4.3.2.14 FOR CRITICAL AND MAJOR CHARACTERISTICS.
5. REQUIREMENTS:

CLOSED O.D.	.375 MAX
CLOSED LENGTH	.648 MAX
TYPE OF ENDS	CLOSED & GROUND
LOAD AT 1.193	3.74 +10% LB
LOAD AT .693	21.76+10% LB
INSIDE DIA	.256 MIN
FREE LENGTH	(1.297)

6. ADVISORY DATA (NOT MANDATORY):

WIRE DIA	.054
ACTIVE COILS	10
TOTAL COILS	12

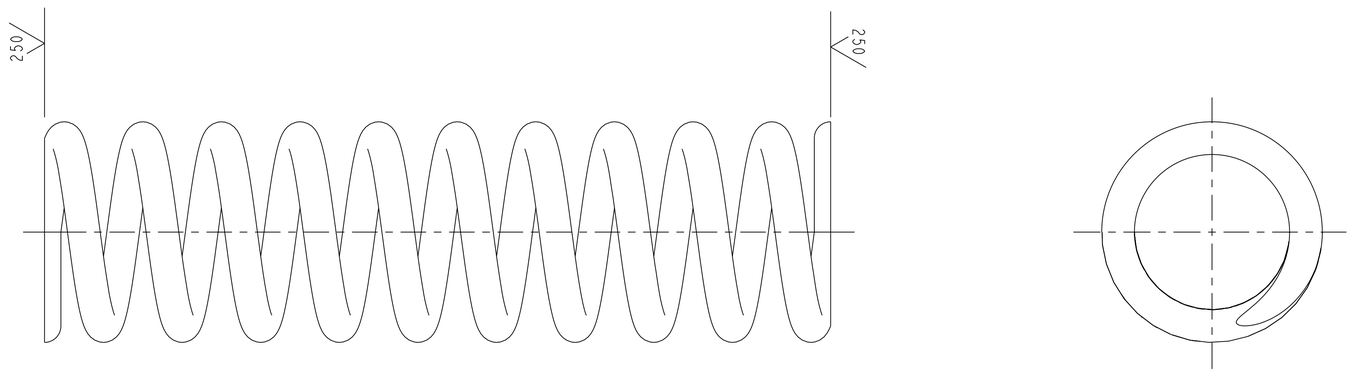

DISTRIBUTION STATEMENT C:
DISTRIBUTION AUTHORIZED TO U.S. GOVERNMENT AGENCIES AND THEIR CONTRACTORS, ADMINISTRATIVE OR OPERATIONAL USE, 4-10-91. OTHER REQUESTS FOR THIS DOCUMENT SHALL BE REFERRED TO COMMANDING OFFICER, NAVAL ORDNANCE STATION, INDIAN HEAD, MD 20640-5000.

NEXT ASSY	USED ON
F10521045	INITIATOR, M29,
D10520225	INITIATOR, M30, M32, M43
D8595817	INITIATOR, M4, M12, M45, M49
SEE ENGINEERING RECORDS	
APPLICATION	

UNLESS OTHERWISE SPECIFIED DIMENSIONS ARE IN INCHES
GENERAL TOLERANCES
XX DECIMALS ± —
XXX DECIMALS ± —
ANGLES ± —
MATERIAL: 2.
DO NOT SCALE DRAWING

INDIAN HEAD DIVISION
NAVAL SURFACE WARFARE CENTER
INDIAN HEAD, MD 20640-5035

ENGINEER		
ENGINEER		
CHECKED		
DRAWN		
APPROVED FOR		DATE

AUTHENTICATED 1/21/59

CURRENT DESIGN ACTIVITY CAGE CODE 14083
DEPARTMENT OF THE NAVY
NAVAL SURFACE WARFARE CENTER
INDIAN HEAD DIVISION
INDIAN HEAD, MARYLAND 20640-5035

INDUSTRIAL GROUP ORDNANCE CORPS
DEPT OF THE ARMY
U.S. ARMY ORDNANCE ARSENAL
FRANKFORD

SPRING, INITIATOR

SIZE	CAGE CODE	DRAWING NUMBER
D	00000	8595406
SCALE: NONE		SHEET 1 OF 1

CLASSIFICATION OF CHARACTERISTICS (DOD-STD-2101)	
CRITICAL-	NONE
MAJOR-	NONE
MINOR-	ALL CHARACTERISTICS

FOR PROCUREMENT: N00104-15-N-B125 - 2/2/2015

REVISIONS			
REV	DESCRIPTION	DATE	APPROVAL
H	REDRAWN WITH CHANGE SEE ECP 09E215A010DBR1	2012/02/15	

CAD MAINTAINED, CHANGES SHALL BE INCORPORATED BY THE DESIGN ACTIVITY

NOTES:

1. THE BONDED LABEL SHALL BE CAPABLE OF MEETING THE REQUIREMENTS OF SPEC MIL-DTL-19834.
2. LETTERS AND NUMERALS SHALL BE .125 IN. HIGH APPROX. LABEL MARKINGS SHALL BE COMPLETED BY ANY SUITABLE MECHANICAL MEANS CAPABLE OF PRODUCING LEGIBLE COMPLETELY UPSET CHARACTERS. MARKING SHALL BE ACCOMPLISHED PRIOR TO LABEL APPLICATION. LETTERS TO BE UPPER CASE AND WHOLLY WITHIN ALLOTTED SPACES.
3. ASSEMBLE CARTRIDGE RETAINER, PART NO.8593013, TO FIRING PIN HOUSING, PART NO. 8596169, WITH A TORQUE OF 50 TO 75 INCH POUNDS.
4. ASSEMBLE INITIATOR CHAMBER, PART NO.8593014, TO CAP, PART NO.8595404, WITH A TORQUE OF 200 TO 225 INCH POUNDS.
5. SERIAL NUMBERS 1 THRU 99 SHALL BE MARKED ON LABELS AS THREE DIGIT NUMBERS, 001 THRU 099.
6. COATING COMPOUND, FIND NO. 5, OR RTV 732 (BLACK), TO BE APPLIED OVER THE SETSCREW AREA, BY BRUSH OR OTHER SUITABLE MEANS, ASSURING FULL COVERAGE OF SETSCREW AND HOLE, WITH NO CONTAMINATION OF NON-APPLICABLE AREAS.
7. LABEL TO BE CENTRALLY LOCATED ON INITIATOR CHAMBER, PART NO.8593014, BETWEEN HOLES ON CAP, PART NO.8595404 OPPOSITE MOUNTING SURFACE.
8. NOTED DIMENSION DEFINES MAXIMUM CONFIGURATION ONLY AND SHALL NOT TAKE PRECEDENCE OVER COMPLIANCE WITH THE REQUIREMENTS SPECIFIED IN NOTES 3 AND 4.
9. CARTRIDGE INSTALLED IN INITIATORS SHALL BE MANUFACTURED WITHIN ONE YEAR PRIOR TO THE DATE OF INITIATOR ASSEMBLY.
10. ALL REQUIREMENTS OF MIL-I-46559 AND MIL-I-46625 APPLY.
11. FOR DATA LIST SEE DL8595821.

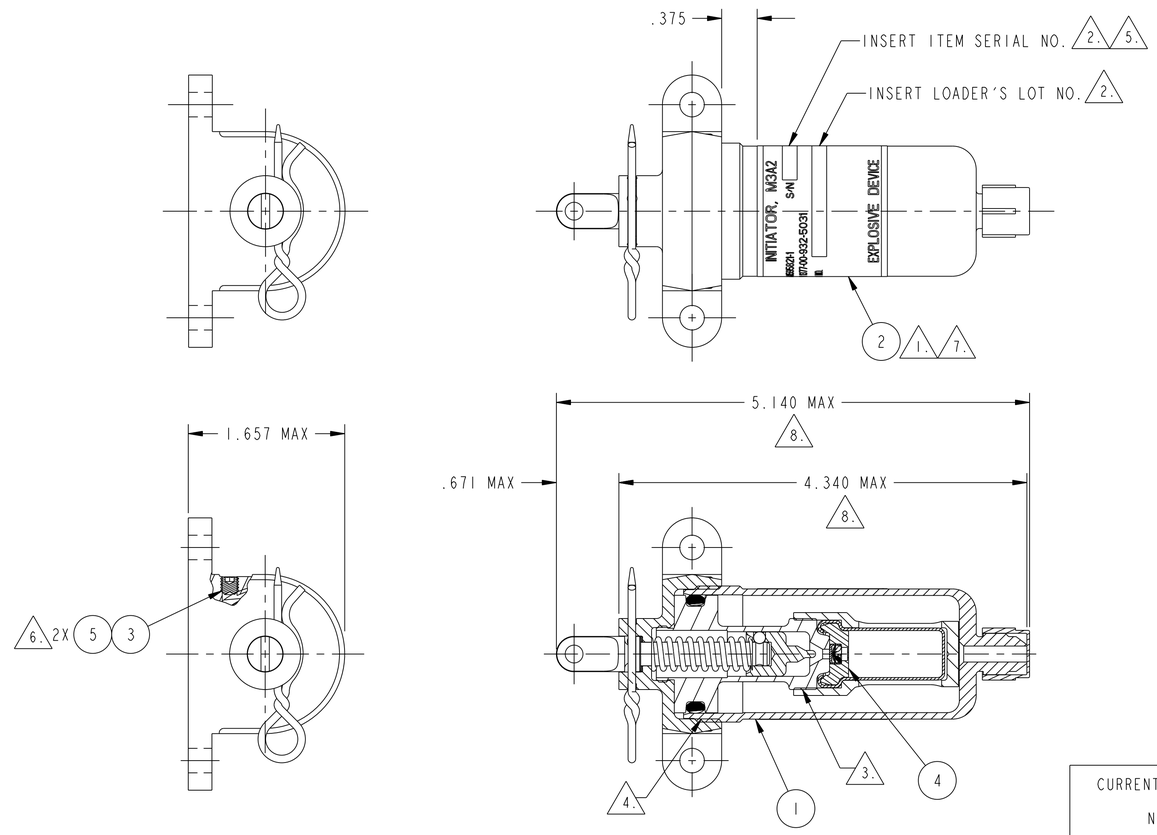

CURRENT DESIGN ACTIVITY CAGE CODE 14083
DEPARTMENT OF THE NAVY
NAVAL SURFACE WARFARE CENTER
INDIAN HEAD DIVISION
INDIAN HEAD, MARYLAND 20640-5035

FIND NO	QTY REQ	CAGE CODE	PART OR IDENTIFYING NUMBER	SPECIFICATION NUMBER	NOMENCLATURE OR DESCRIPTION	MATERIAL OR NOTE
5	AR			MIL-C-16555	COATING COMPOUND, TYPE II, OR RTV 732	
4	1		8594157		CARTRIDGE, IMPULSE, M73 ASSEMBLY	
3	2		COMMERCIAL		SETSCREW, HEX SOCKET, KNURLED CUP POINT, .190-32 UNF-3A X 3/16 LG	ALLOY STEEL
2	1		8594265		LABEL, IDENTIFICATION	
1	1		8595822		INITIATOR, CARTRIDGE ACTUATED, METAL PARTS ASSEMBLY	

PARTS LIST

SEE ENGINEERING RECORDS
NEXT ASSY | USED ON
APPLICATION

UNLESS OTHERWISE SPECIFIED DIMENSIONS ARE IN INCHES
GENERAL TOLERANCES
XX DECIMALS ± —
XXX DECIMALS ± 0.015
ANGLES ± —
MATERIAL: —
DO NOT SCALE DRAWING

INDIAN HEAD DIVISION
NAVAL SURFACE WARFARE CENTER
INDIAN HEAD, MD 20640-5035

ENGINEER
ENGINEER
CHECKED
DRAWN
APPROVED FOR | DATE

AUTHENTICATED 1/15/65

U.S. ARMY
FRANKFORD ARSENAL

INITIATOR, CARTRIDGE ACTUATED, M3A2 ASSEMBLY

SIZE	CAGE CODE	DRAWING NUMBER
D	19200	8595821

SCALE: NONE | SHEET 1 OF 1

DISTRIBUTION STATEMENT C:
DISTRIBUTION AUTHORIZED TO U.S. GOVERNMENT AGENCIES AND THEIR CONTRACTORS, ADMINISTRATIVE OR OPERATIONAL USE, 4-10-91. OTHER REQUESTS FOR THIS DOCUMENT SHALL BE REFERRED TO COMMANDING OFFICER, NAVAL ORDNANCE STATION, INDIAN HEAD, MD 20640-5000.

CLASSIFICATION OF CHARACTERISTICS (DOD-STD-2101)	
CRITICAL-	NONE
MAJOR-	NONE
MINOR-	ALL CHARACTERISTICS

FOR PROCUREMENT: N00104-15-N-B125 - 2/2/2015

REVISIONS			
REV	DESCRIPTION	DATE	APPROVAL
E	REDRAWN WITH CHANGE SEE ECP 09E215A010DBR1	2012/02/15	

CAD MAINTAINED, CHANGES SHALL BE INCORPORATED BY THE DESIGN ACTIVITY

NOTES:

1. APPLY A LIGHT COATING OF "O" RING LUBRICANT, FIND NO. 13, ON "O" RING, FIND NO. 12, PRIOR TO ASSEMBLY.

2. WHEN ASSEMBLING THE FIRING PIN HOUSING, FIND NO. 7, TO THE CAP, FIND NO. 1, THE SIDE OF THE "O" RING FLANGE MUST BE FIRMLY SEATED AGAINST THE BASE OF THE 1.437 THREADED CAVITY IN THE CAP.

3. DELETED.

4. THE ASSEMBLY OF THE CARTRIDGE RETAINER, FIND NO. 8, TO THE FIRING PIN HOUSING, FIND NO. 7, AND THE INITIATOR CHAMBER, FIND NO. 9, TO THE CAP, FIND NO. 1, SHALL BE HAND TIGHT, TO FACILITATE DISASSEMBLY FOR LOADING.

5. ALL REQUIRMENTS OF MIL-I-46559 APPLY.

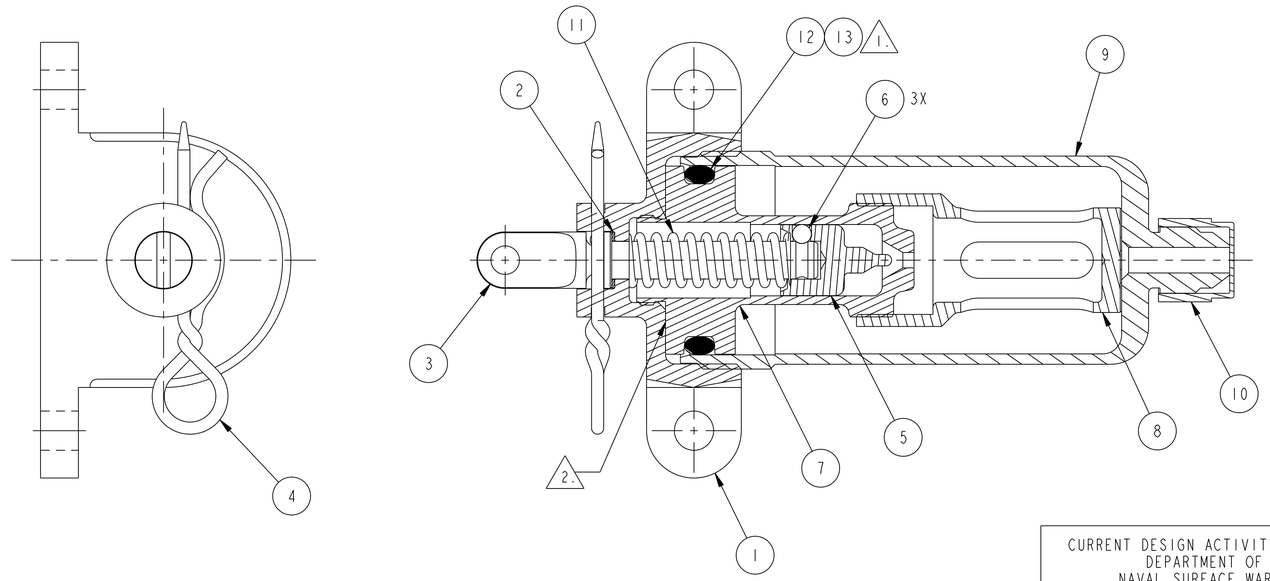

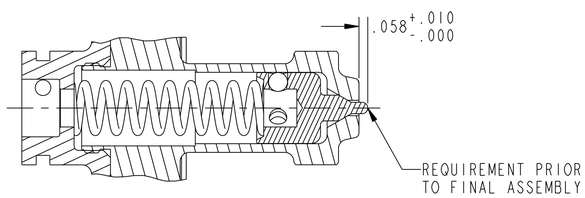

VIEW OF PIN IN FIRED POSITION

CURRENT DESIGN ACTIVITY CAGE CODE 14083
DEPARTMENT OF THE NAVY
NAVAL SURFACE WARFARE CENTER
INDIAN HEAD DIVISION
INDIAN HEAD, MARYLAND 20640-5035

FIND NO	QTY REQ	CAGE CODE	PART OR IDENTIFYING NUMBER	SPECIFICATION NUMBER	NOMENCLATURE OR DESCRIPTION	MATERIAL OR NOTE
13	AR		834AS129		LUBRICANT, O-RING	
12	1		MS28775-214	MS28775	"O" RING	
11	1		8595406		SPRING, INITIATOR	
10	1		NAS832-4	NAS832	CAP, PROTECTIVE	
9	1		8593014		CHAMBER, INITIATOR	
8	1		8593013		RETAINER, CARTRIDGE	
7	1		8596169		HOUSING, FIRING PIN	
6	3		MS19060-3	MS19060	BALL	
5	1		8596168		PIN, FIRING	
4	1		8595405		PIN, SAFETY	
3	1		8595403		PIN, INITIATOR	
2	1		10524102		SEAL	
1	1		8595404		CAP	

PARTS LIST

SEE ENGINEERING RECORDS

NEXT ASSY	USED ON
APPLICATION	

UNLESS OTHERWISE SPECIFIED DIMENSIONS ARE IN INCHES
GENERAL TOLERANCES
XX DECIMALS ± —
XXX DECIMALS ± —
ANGLES ± —

MATERIAL: —

DO NOT SCALE DRAWING

INDIAN HEAD DIVISION
NAVAL SURFACE WARFARE CENTER
INDIAN HEAD, MD 20640-5035

ENGINEER		
ENGINEER		
CHECKED		
DRAWN		
APPROVED FOR		DATE

AUTHENTICATED 1/15/65

U.S. ARMY
FRANKFORD ARSENAL

INITIATOR, CARTRIDGE ACTUATED, METAL PARTS ASSEMBLY

SIZE	CAGE CODE	DRAWING NUMBER
D	19200	8595822

SCALE: NONE | SHEET 1 OF 1

DISTRIBUTION STATEMENT C:
DISTRIBUTION AUTHORIZED TO U.S. GOVERNMENT AGENCIES AND THEIR CONTRACTORS, ADMINISTRATIVE OR OPERATIONAL USE, 4-10-91. OTHER REQUESTS FOR THIS DOCUMENT SHALL BE REFERRED TO COMMANDING OFFICER, NAVAL ORDNANCE STATION, INDIAN HEAD, MD 20640-5000.

CLASSIFICATION OF CHARACTERISTICS (DOD-STD-2101)	
CRITICAL-	NONE
MAJOR-	NONE
MINOR-	ALL CHARACTERISTICS

FOR PROCUREMENT: N00104-15-N-B125 - 2/2/2015

REVISIONS			
REV	DESCRIPTION	DATE	APPROVAL
B	REDRAWN WITH CHANGE SEE ECP 09E215A010DBR1	2012/02/15	

CAD MAINTAINED, CHANGES SHALL BE INCORPORATED BY THE DESIGN ACTIVITY

NOTES:

1. SPECIFICATION MIL-A-2550 APPLIES.
2. MATERIAL: ALLOY STEEL, 4140, SPEC SAE-AMS-S-5626, ALTERNATIVE MATERIALS:
   ALLOY STEEL, 4130, SPEC SAE-AMS-S-6758
   ALLOY STEEL, 4340, SPEC SAE-AMS-S-5000
   HARDNESS REQUIREMENT RHC 38-42, HARDENED AND TEMPERED, SURFACE CONDITION: TURNED AND POLISHED.
3. 125 ALL OVER EXCEPT AS NOTED.
4. FINAL PROTECTIVE FINISH: CADMIUM PLATING, FINISH NO. 1.1.2.3 (.0002 MIN THICK) OF MIL-STD-171 (MR). WITHIN FOUR HOURS AFTER PLATING, PART SHALL BE HEATED TO 375F±25F FOR EIGHT HOURS MINIMUM.
5. QUALITY REQUIREMENTS: THE PRODUCT AS RECEIVED BY THE PURCHASER SHALL BE UNIFORM IN QUALITY AND CONDITION, SOUND, FREE FROM ALL DETRIMENTAL IMPERFECTIONS. ROLLING DEFECTS LIKE SEAMS, LAPS, CRACKS AND TEARS SHOULD NOT BE PRESENT AFTER REMOVAL OF ADEQUATE MATERIAL FROM STOCK. ONLY STEELS, CONFORMING TO AIRCRAFT QUALITY MATERIALS PER AMS 2301, WITH A MAXIMUM AVERAGE FREQUENCY (F) OF 0.34 AND AN AVERAGE SEVERITY (S) RATING OF 0.25 SHALL BE USED. FINISHED SURFACE SHALL BE FREE OF ANY TOOL MARKS OR OTHER DEFECTS.
6. REFER TO MIL-I-46559 PARAGRAPH 4.5.2.7 OR MIL-I-14802 PARAGRAPH 4.3.2.3 FOR CRITICAL AND MAJOR CHARACTERISTICS.

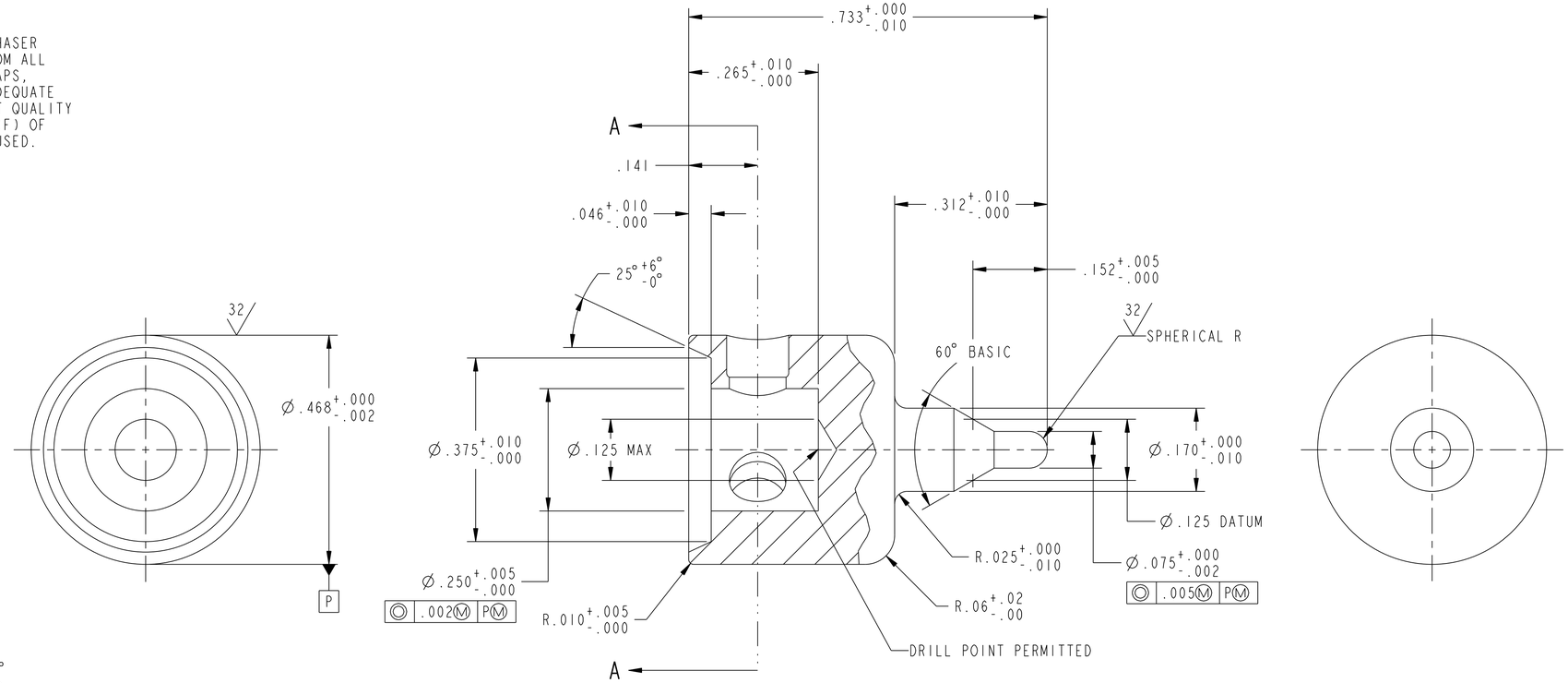

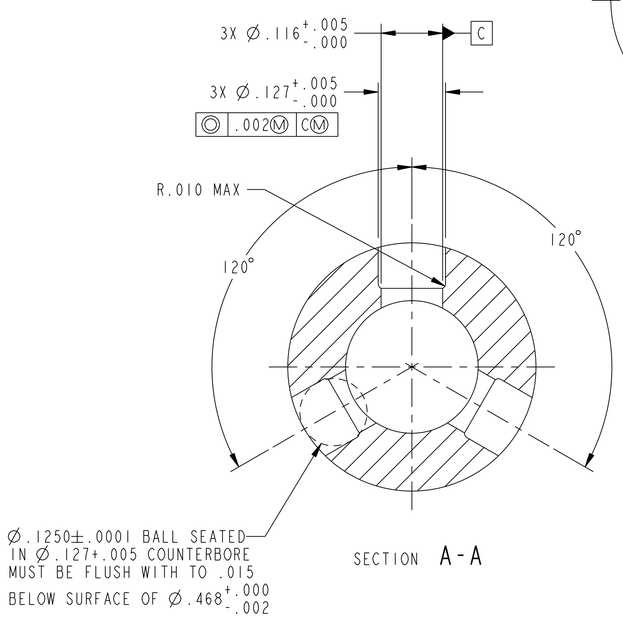

DISTRIBUTION STATEMENT C:
DISTRIBUTION AUTHORIZED TO U.S. GOVERNMENT AGENCIES AND THEIR CONTRACTORS, ADMINISTRATIVE OR OPERATIONAL USE, 4-10-91. OTHER REQUESTS FOR THIS DOCUMENT SHALL BE REFERRED TO COMMANDING OFFICER, NAVAL ORDNANCE STATION, INDIAN HEAD, MD 20640-5000.

SEE ENGINEERING RECORDS	
NEXT ASSY	USED ON
APPLICATION	

UNLESS OTHERWISE SPECIFIED DIMENSIONS ARE IN INCHES
GENERAL TOLERANCES
XX DECIMALS ± —
XXX DECIMALS ± 0.005
ANGLES ± 5.0°
MATERIAL: 2. 4.
DO NOT SCALE DRAWING

INDIAN HEAD DIVISION
NAVAL SURFACE WARFARE CENTER
INDIAN HEAD, MD 20640-5035

ENGINEER		
ENGINEER		
CHECKED		
DRAWN		
APPROVED FOR		DATE

AUTHENTICATED 1/15/65

CURRENT DESIGN ACTIVITY CAGE CODE 14083
DEPARTMENT OF THE NAVY
NAVAL SURFACE WARFARE CENTER
INDIAN HEAD DIVISION
INDIAN HEAD, MARYLAND 20640-5035

PROCUREMENT AND PRODUCTION DIRECTORATE
U.S. ARMY
FRANKFORD ARSENAL

PIN, FIRING

SIZE	CAGE CODE	DRAWING NUMBER
D	19200	8596168
SCALE: NONE		SHEET 1 OF 1

CLASSIFICATION OF CHARACTERISTICS (DOD-STD-2101)	
CRITICAL-	NONE
MAJOR-	NONE
MINOR-	ALL CHARACTERISTICS

FOR PROCUREMENT: N00104-15-N-B125 - 2/2/2015

SH	REVISIONS			
2	REV	DESCRIPTION	DATE	APPROVAL
B	B	REDRAWN WITH CHANGE SEE ECP 09E215A010DBR1	2012/02/15	

CAD MAINTAINED, CHANGES SHALL BE INCORPORATED BY THE DESIGN ACTIVITY

NOTES:

1. SPECIFICATION MIL-A-2550 APPLIES.
2. MATERIAL: ALLOY STEEL, 4140 - SPEC SAE-AMS-S-5626, ALTERNATIVE MATERIAL:
   ALLOY STEEL, 4130 - SPEC SAE-AMS-S-6758
   ALLOY STEEL, 4340 - SPEC SAE-AMS-S-5000
   HARDNESS REQUIRMENT RHC 33-38, PHYSICAL CONDITION: HARDENED AND TEMPERED, SURFACE CONDITION: TURNED AND POLISHED.
3. 125 ALL OVER EXCEPT AS NOTED.
4. FINISH 63 APPLIES TO Ø.471 +.002 -.000 WITHIN LENGTH INDICATED.
5. FINAL PROTECTIVE FINISH: CADMIUM PLATING, FINISH NO. 1.1.2.3 (.0002 MIN THICK) OF MIL-STD-171(MR). WITHIN FOUR HOURS AFTER PLATING, PART SHALL BE HEATED TO 375F±25F FOR EIGHT HOURS MINIMUM.
6. WHEN ALTERNATIVE DESIGN IS USED, UNDERCUT SHALL BE PRESENT 360°.
7. STAMP OR ENGRAVE PART NO.8596169 ON THIS SURFACE PRIOR TO APPLICATION OF PROTECTIVE FINISH.
8. NUMBERS TO BE .062 HIGH X .010 MAX DEEP. ALL FIGURES SHALL BE UNIFORM, CLEAR AND LEGIBLE.
9. QUALITY REQUIREMENTS: THE PRODUCT AS RECEIVED BY THE PURCHASER SHALL BE UNIFORM IN QUALITY AND CONDITION, SOUND, FREE FROM ALL DETRIMENTAL IMPERFECTIONS. ROLLING DEFECTS LIKE SEAMS, LAPS, CRACKS AND TEARS SHOULD NOT BE PRESENT AFTER REMOVAL OF ADEQUATE MATERIAL FROM STOCK. ONLY STEELS, CONFORMING TO AIRCRAFT QUALITY MATERIALS PER AMS 2301, WITH A MAXIMUM AVERAGE FREQUENCY (F) OF 0.34 AND AN AVERAGE SEVERITY (S) RATING OF 0.25 SHALL BE USED. FINISHED SURFACE SHALL BE FREE OF ANY TOOL MARKS OR OTHER DEFECTS.
10. REFER TO MIL-I-46559 PARAGRAPH 4.5.2.8 OR MIL-I-14802 PARAGRAPH 4.3.2.2 FOR CRITICAL AND MAJOR CHARACTERISTICS.

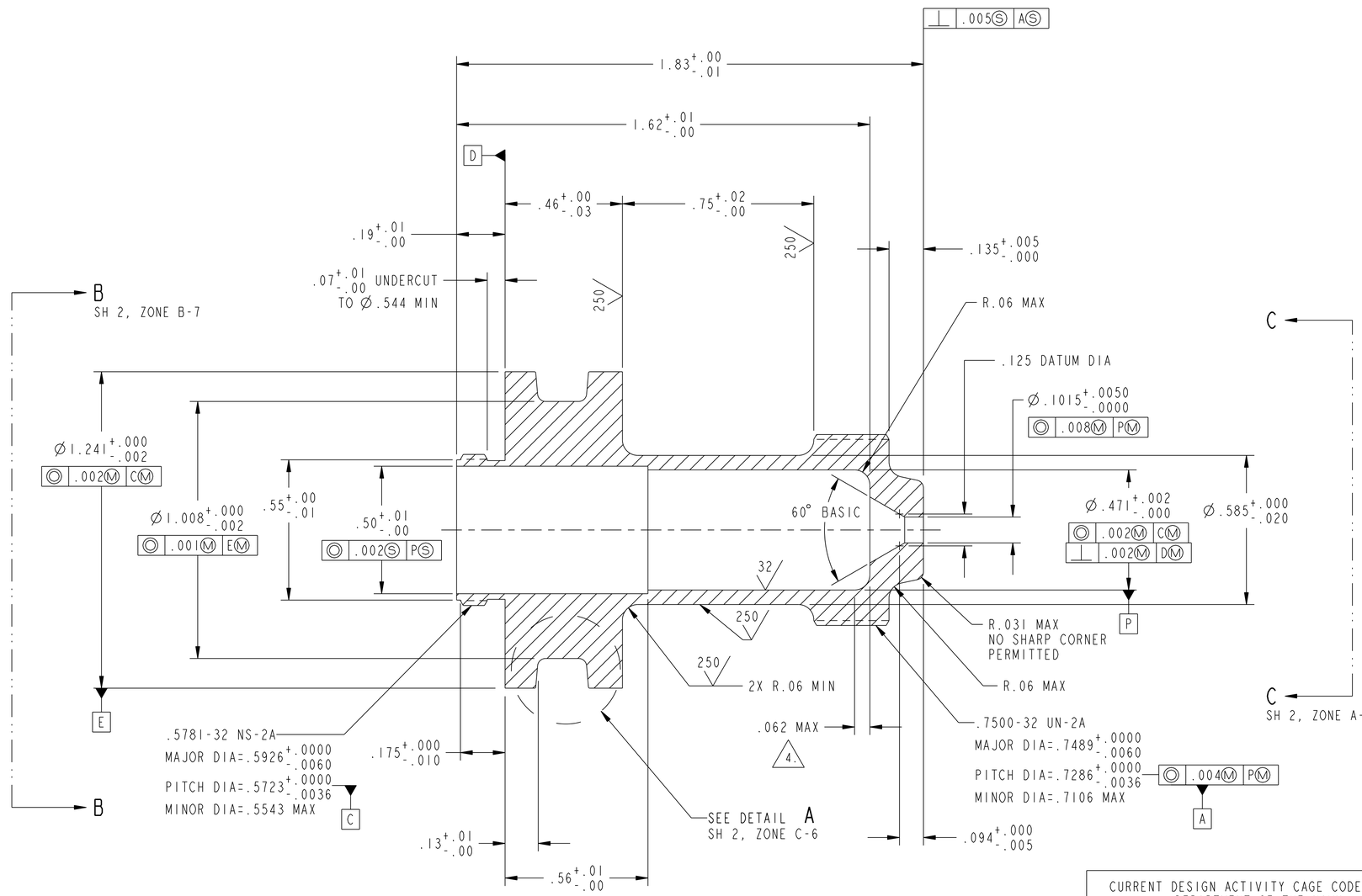

CURRENT DESIGN ACTIVITY CAGE CODE 14083
DEPARTMENT OF THE NAVY
NAVAL SURFACE WARFARE CENTER
INDIAN HEAD DIVISION
INDIAN HEAD, MARYLAND 20640-5035

DISTRIBUTION STATEMENT C:
DISTRIBUTION AUTHORIZED TO U.S. GOVERNMENT AGENCIES AND THEIR CONTRACTORS, ADMINISTRATIVE OR OPERATIONAL USE, 4-10-91. OTHER REQUESTS FOR THIS DOCUMENT SHALL BE REFERRED TO COMMANDING OFFICER, NAVAL ORDNANCE STATION, INDIAN HEAD, MD 20640-5000.

SEE ENGINEERING RECORDS	
NEXT ASSY	USED ON
APPLICATION	

UNLESS OTHERWISE SPECIFIED DIMENSIONS ARE IN INCHES
GENERAL TOLERANCES
XX DECIMALS ± —
XXX DECIMALS ± 0.015
ANGLES ± —
MATERIAL: 2 5
DO NOT SCALE DRAWING

INDIAN HEAD DIVISION
NAVAL SURFACE WARFARE CENTER
INDIAN HEAD, MD 20640-5035

ENGINEER		
ENGINEER		
CHECKED		
DRAWN		
APPROVED FOR		DATE

AUTHENTICATED 1/15/95

PROCUREMENT AND PRODUCTION DIRECTORATE
U.S. ARMY
FRANKFORD ARSENAL

HOUSING, FIRING PIN

SIZE	CAGE CODE	DRAWING NUMBER
D	19200	8596169
SCALE: NONE		SHEET 1 OF 2

FOR PROCUREMENT: N00104-15-N-B125 - 2/2/2015

REVISIONS			
REV	DESCRIPTION	DATE	APPROVAL
B	REDRAWN WITH CHANGE SEE ECP 09E215A010DBR1	2012/02/15	

CAD MAINTAINED, CHANGES SHALL
BE INCORPORATED BY THE DESIGN ACTIVITY

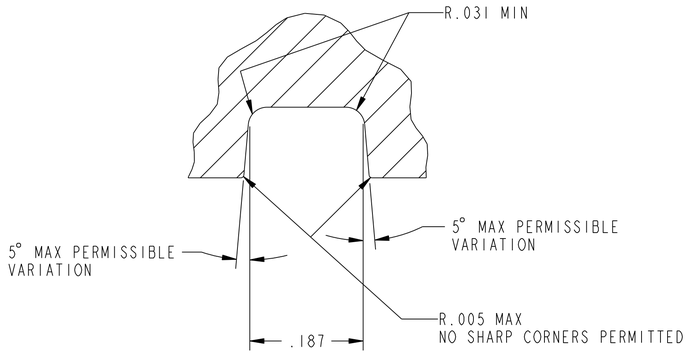

DETAIL A
SCALE 8/1
FROM SH 1, ZONE B-3

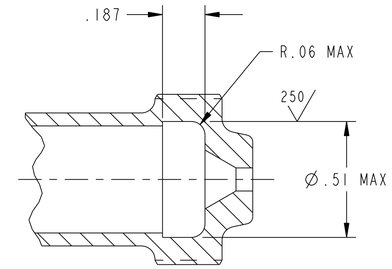

ALTERNATIVE DESIGN

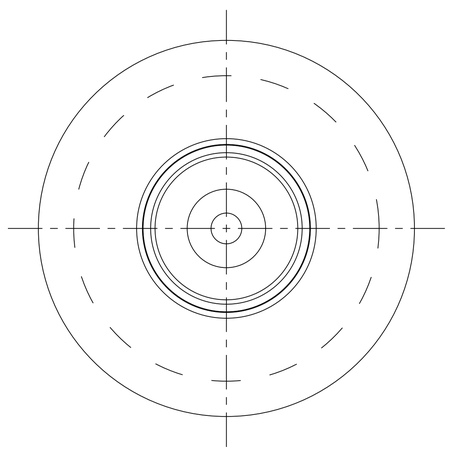

VIEW B-B
FROM SH 1, ZONE C-6

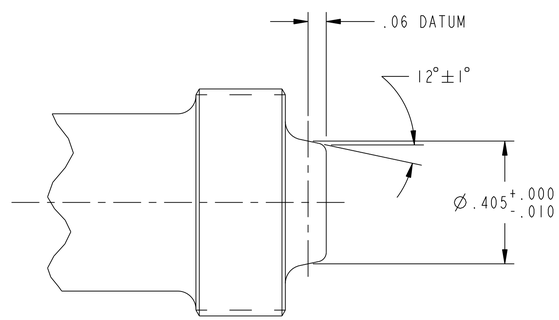

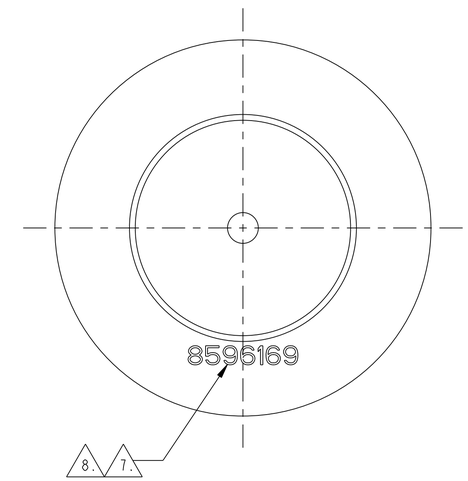

VIEW C-C
FROM SH 1, ZONE B-1

SIZE	CAGE CODE	DRAWING NUMBER
D	19200	8596169
SCALE: NONE		SHEET 2 OF 2

SYM	DESCRIPTION	DATE	APPROVAL
F		09-12-68	
G	NOR7201184-4	11-21-72	
H	SEE NOR 8796541-H	1/11/90	

FOR PROCUREMENT: N00104-15-N-B125 - 2/2/2015

LIST OF PARTS

LINE NO.	NAME OF PART	NO. REQD.	MATERIAL KIND	MATERIAL GRADE	DRAWING OR SPEC NUMBER	REMARKS
1	AMMO & SPL WPNS GEN SPEC FOR				MIL-A-2550	
2						
3	BAG	1	BARRIER MATERIAL	STYLE 1, TYPE 1, CL E	MIL-B-117	E
4						
5	BOX (INNER)	1	FIBERBOARD	TYPE CF STYLE OPF	PPP-B-636	E
6						
7	FILLER, END	1	CHIPBOARD		COMMERCIAL	
8						
9	LABEL	1	GUMMED PAPER (WHITE)		COMMERCIAL	F
10						
11						
12	SPACER	1	FIBERBOARD	TYPE CF	PPP-F-320	B, G
13						
14	SUPPORT	1	FIBERBOARD	TYPE CF	PPP-F-320	B
15		A	FILLER MATERIAL (CHIPBOARD)		COMMERCIAL	
16		A	INK, STENCIL, BLACK NO. 37038		A-A-208	C
17		A	ADHESIVE, DEXTRIN		MIL-A-13374	D
18						
19						
20						
21						
22						
23						
24						
25						

A- AS REQUIRED.
B- GRADE 125, CLASS DOMESTIC, VARIETY SW, "B" OR "C" FLUTE.
C- ALTERNATIVE MATERIALS:- FOR LABEL AND BOX, COMMERCIAL BLACK PRINTERS INK.
FOR CLOTH BACKED BAG, INDELIBLE INK, SPEC TT-I-542.

D- ALTERNATIVE METHOD:- BOX FLAPS MAY BE SECURED WITH A 2. INCH WIDE GUMMED PAPER TAPE, TYPE III, GRADE B, SPEC PPP-T-45.
E- APPLY MARKING TO BOX BY LABELING, PRINTING, STAMPING OR STENCILING, MARK BAG BY PRINTING OR STAMPING.
F- WEIGHT UNGUMMED, 32. LB PER 1000 SHEETS 17 X 22 INCHES.
G- REQUIRED WHEN PACKING M5A2 INITIATOR.

BAG

6 1/4 MIN X 10 3/4 MIN INSIDE

BOX (INNER)

5 1/4 X 3. X 1 3/4 INSIDE DIMENSIONS
TOLERANCE ON INSIDE DIMENSIONS ± 1/16

FILLER, END

2 7/8 MIN X 1 11/16 MIN X 1/16 THICK

LABEL

3. X 2. APPROX

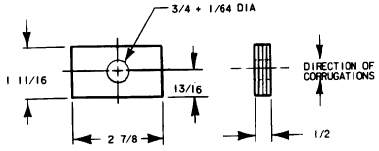

SUPPORT

MAY BE FABRICATED OF MORE THAN ONE PIECE STAPLED OR GLUED; OR ONE CONTINUOUS PIECE CREASED TO REQUIRED DIMENSIONS.

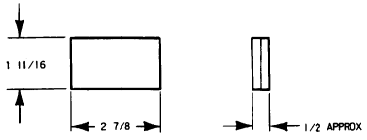

SPACER

MAY BE FABRICATED OF MORE THAN ONE PIECE STAPLED OR GLUED; OR ONE CONTINUOUS PIECE CREASED TO REQUIRED DIMENSIONS.

DISTRIBUTION STATEMENT C: Distribution authorized to U.S. Government and their contractors, administrative or operational use, 4-10-91. Other requests for this document shall be referred to Commanding Officer, Naval Ordnance Station, Indian Head, MD 20640-5000.

PACKING INSTRUCTIONS

ALL MATERIAL SHALL BE THOROUGHLY DRY AT THE TIME OF PACKING. MAXIMUM MOISTURE CONTENT OF PACKING MATERIALS 8%.
FORM BOX. INSERT A SUPPORT OVER SHIPPING CAP OF INITIATOR AND PLACE ON BOX BOTTOM. (INSERT SPACER AT ONE END WHEN PACKING M5A2 INITIATOR). INSERT AN END FILLER AT END WITH INITIATOR PIN. INSERT 1/16 THICK CHIPBOARD FILLER MATERIAL AT ENDS ALONG SIDES AND ON TOP IF REQUIRED TO PACK THE CONTENTS TIGHTLY. CLOSE BOX AND SECURE TOP OUTER FLAPS WITH DEXTRIN ADHESIVE OR A CENTER SEALING STRIP.
APPLY MARKING.
BLUNT ALL CORNERS.
INSERT BOX IN BAG.
CLOSE, EXHAUST ALL EXCESS AIR WITHIN BAG AND SEAL IN ACCORDANCE WITH MANUFACTURER'S INSTRUCTIONS WITH SEAL LOCATED AT EDGE OF BAG TO PROVIDE FOR A MINIMUM OF TWO SUBSEQUENT SEALS IF REQUIRED. THE SEALS SHALL COMPLY WITH THE HEAT SEAL TEST IN ACCORDANCE WITH SPECIFICATION MIL-P-116.

MARKING FOR BOX AND BAG

-1-

INITIATOR CARTRIDGE ACTUATED W/CARTRIDGE M73. ( ) ( ) ( ) ( ) ( ) ( ) ← NOTE 4
INITIATOR LOT ← NOTE 1
CARTRIDGE LOT ← NOTE 2
PACKED ( )( )-( )( ) ← NOTE 3

SIZE OF LETTERS AND FIGURES FOR NOMENCLATURE 1/4 MIN, FOR LOT AND DATE, 1/8 MIN.

NOTES:-
1- INSERT LOT NUMBER OF INITIATOR WITH CARTRIDGE.
2- INSERT LOT NUMBER OF CARTRIDGE.
3- INSERT MONTH AND YEAR BOX WAS PACKED.
4- INSERT APPLICABLE INITIATOR.

INSTRUCTIONS FOR REUSE OF PACKAGING MATERIALS

SEE DRAWING 5184814

MARKING INSTRUCTIONS (FOR NAVY USE)

SIZE OF LETTERS AND FIGURES FOR NOMENCLATURE 1/4 MIN; OTHER REQUIRED MARKING 1/8 MIN.
NSN ← NOTE 1
INITIATOR CRTG ACTUATED ( ) ( ) ( ) ( ) ( ) ( ) ← NOTE 2
DWG NO. ( )( )( )( )( )( )( )( ) ← NOTE 3
QTY ( )( ) ← NOTE 4
LOT NO. ← NOTE 5

NOTES:-
1- INSERT NSN AND DODIC.
2- INSERT APPLICABLE INITIATOR.
3- INSERT APPLICABLE DWG NUMBER.
4- INSERT QUANTITY PACKED.
5- INSERT LOT NUMBER PER MIL-STD-1168.

REFERENCE DATA

FOR BOX FIBERBOARD, (OUTER) ALTERNATIVE PACKING (FOR DOMESTIC SHIPMENTS OR LEVEL B) SEE DRAWING D9216934.
FOR PACKING BOX SEE DWG D8796542.
FOR INITIATOR M3A2 SEE DRAWING F8595821.
FOR INITIATOR M3A1C SEE DRAWING F10524101.
FOR INITIATOR M5A2 SEE DRAWING F8596170.
FOR CARTRIDGE M73 SEE DRAWING D8594157.

PART NO. 8796541

		MECHANICAL PROPERTIES	
	INITIATOR	YP	
	DELAY	TS	
		EL2	
		RA	
		BH	
NEXT ASSY	USED ON	RH	
APPLICATION			

DO NOT SCALE DRAWING
UNLESS OTHERWISE SPECIFIED DIMENSIONS ARE IN INCHES
TOLERANCES ON DECIMALS ±
FRACTIONS ± 1/16 ANGLES ±

ORIGINAL DATE OF DRAWING 19 OCT 1956
DRAFTSMAN / CHECKER / ENGR / ENGR / ENGR / ENGR
G.R. BUCK
J.D. MATLACK

U.S. ARMY MUNITIONS COMMAND
PICATINNY ARSENAL, DOVER, NEW JERSEY 07801

BOX, FIBERBOARD (INNER) PACKING, AMMUNITION, FOR INITIATOR, CARTRIDGE ACTUATED, M3A2, M3A1C OR M5A2.

SIZE	CODE IDENT NO.	
D	19203	8796541
SCALE	UNIT WT.	SHEET

SMUPA FORM 1041 DEC 69

REVISIONS			
SYM	DESCRIPTION	DATE	APPROVAL
E		09-12-68	
F	NOR 72C11 84-4	11-21-72	
G	SEE NOR 8796542-G	1/11/90	

FOR PROCUREMENT: N00104-15-N-B125 - 2/2/2015

LIST OF PARTS

LINE NO.	NAME OF PART	NO. REQD.	MATERIAL KIND	MATERIAL GRADE	DRAWING OR SPEC NUMBER	REMARKS
1	AMMO & SPL WPNS GEN SPEC FOR				MIL-A-2550	
2						
3	BOX, PACKING	1	WOOD	A.STYLE 4,CL 2	PPP-B-621	C,D, E
4						
5	FILLER, END	A	COMPOSITION BOARD	TYPE I OR II	MIL-B-3106	B
6						
7	FILLER, SIDE	A	COMPOSITION BOARD	TYPE I OR II	MIL-B-3106	B
8						
9	FILLER, TOP	A	COMPOSITION BOARD	TYPE I OR II	MIL-B-3106	B
10						
11	STRAPPING	A			PPP-B-621	
12						
13						
14						
15						
16						
17						
18						
19						
20						
21						
22						
23						
24						
25						

A- AS REQUIRED.

B- ALTERNATIVE:- FILLER, SHEET FORM, SPEC MIL-F-50449.

C- BOX TO BE PROVIDED WITH HORIZONTAL CLEATS FABRICATED OF SAME MATERIAL, WIDTH AND THICKNESS AS END CLEATS. HORIZONTAL CLEATS TO BE SECURED TO BOX END BETWEEN END CLEATS 1 1/2 INCHES FROM TOP OF BOX (INSIDE DIMENSIONS) WITH NOT LESS THAN 5-6D NAILS CLINCHED.

D- GSA STOCK OF APPROXIMATE SIZE MAY BE USED WITH SUITABLE DUNNAGE FOR SMALL ORDERS PROVIDING APPROVAL IS OBTAINED BY THE PROCURING ACTIVITY AND CONSIDERED ECONOMICALLY FEASIBLE BY THE SUPPLIER.

E- TYPE I. EASY LOAD. WEIGHT OF CONTENTS 44. LBS APPROX.

BOX, PACKING

18 3/8 X 13 7/8 X 6 1/16 INSIDE DIMENSIONS
TOLERANCE ON INSIDE DIMENSIONS ± 1/8
ADVISORY O.D. 20 7/8 X 14 5/8 X 6 13/16

FILLER, END
13 1/2 MIN X 6. MIN X 1/16 THICK

FILLER, SIDE
17 1/2 MIN X 3. MIN X 1/16 THICK

FILLER, TOP
17 1/2 MIN 12 1/2 MIN X 1/16 THICK

STRAPPING
46 1/2 LONG ADVISORY

LINE NO.	WEIGHT (ESTIMATED) PART	POUNDS
1	BOX, PACKING (EMPTY)	10.0
2	BOX, (INNER) & BAG (32)	14.0
3	INITIATORS (32)	28.8
4	FILLERS, STRAPPING ETC	1.2
5	TOTAL	54.0

INSTRUCTIONS FOR RE-USE OF WOOD BOXES

1. REUSE OF WOOD BOX IS PERMISSIBLE IF CONSIDERED ECONOMICALLY FEASIBLE AND IN USABLE CONDITION.
2. WOOD BOX SHALL BE REJECTED FOR RE-USE UPON DETECTION OF ANY OF THE FOLLOWING:-
   A. CONTAMINATION FROM EXPLOSIVE MATERIAL, OIL OR GREASE ON INTERIOR.
   B. NAILS MISSING, LOOSE OR MISSING KNOTS.

DISTRIBUTION STATEMENT C: Distribution authorized to U.S. Government and their contractors, administrative or operational use. 4-10-91. Other requests for this document shall be referred to Commanding Officer, Naval Ordnance Station, Indian Head, MD 20640-5000.

PACKING INSTRUCTIONS

PACK 32 INITIATORS (IN BOX INNER) ON ENDS IN A 8. X 4. X 1. PATTERN.
INSERT AN END FILLER AT EACH END.
INSERT END, SIDE AND TOP FILLERS IF REQUIRED TO INSURE TIGHT PACKING.
FOR CLOSING AND STRAPPING INSTRUCTIONS SEE APPENDIX OF SPECIFICATION PPP-B-621.

MARKING INSTRUCTIONS (GENERAL)

THE BOX SHALL BE MARKED IN ACCORDANCE WITH DRAWING 5184813 EXCEPT AS FOLLOWS:-
BOX PACKED "()()-()()" (INSERT MONTH AND YEAR PACKED)
INITIATOR LOT (INSERT LOT NUMBER OF INITIATOR WITH CARTRIDGE)
CARTRIDGE LOT (INSERT LOT NUMBER OF CARTRIDGE)
THE DESCRIPTIVE NOMENCLATURE OF THE ITEM PACKED SHALL BE:- "32 INITIATOR CARTRIDGE ACTUATED ( ) ( ) ( ) ( ) ( ) ( ) WITH CARTRIDGE M73" ← NOTE 1
THE DOT MARKING TO BE APPLIED SHALL BE:-"EXPLOSIVE POWER DEVICES CLASS C - HANDLE CAREFULLY - KEEP FIRE AWAY"
CUBICAL DISPLACEMENT SHALL BE, 1.[2]
NSN AND DODIC ← NOTE 2

NOTES:-
MARK BOX "REUSEABLE PACK SAVE FOR REUSE" IN 3/4 INCH LETTERS BY STENCILING, LABELING OR PRINTING PREFERABLY IN THE UPPER RIGHT TWO-THIRDS AREA OF MARKING SURFACE.

1- INSERT APPLICABLE INITIATOR.
2- INSERT APPLICABLE NSN AND DODIC.

MARKING FOR METAL PARTS SHIPMENT

SEE DRAWING 5184813.

MARKING AND ALTERNATIVE MARKING FOR INTERPLANT SHIPMENT

SEE DRAWING 5184813.

MARKING INSTRUCTIONS FOR NAVY USE

SIZE OF LETTERS AND FIGURES SHALL BE AS SPECIFIED ON DRAWING 5184813.
NSN ← NOTE 1
INITIATOR CRTG ACTUATED ( ) ( ) ( ) ( ) ( ) ( ) ← NOTE 2
DWG NO. ()()()()()()()() ← NOTE 3
QTY ()() ← NOTE 4
GROSS WT ()()() LBS ← NOTE 5
CUBE ()() ← NOTE 6
LOT NO. ← NOTE 7
MIPR NO.()()()()()()() ← NOTE 8

NOTES:-
1- INSERT NSN AND DODIC.
2- INSERT APPLICABLE INITIATOR.
3- INSERT APPLICABLE DRAWING NUMBER.
4- INSERT QUANTITY PACKED.
5- INSERT GROSS WEIGHT.
6- INSERT CUBICAL DISPLACEMENT.
7- INSERT LOT NUMBER PER MIL-STD-1168.
8- INSERT MIPR NUMBER. (TO BE SUPPLIED BY CONTRACTING OFFICER)

STORAGE AND SHIPPING INFORMATION (DO NOT MARK ON PACKAGE)

THE EXPLOSIVE HAZARD (QUANTITY-DISTANCE) SHALL BE:- CLASS "1"
THE STORAGE COMPATIBILITY SHALL BE:- GROUP "B". "E" OR "N"

FOR FIBERBOARD BOX (INNER) SEE DRAWING D8796541.

	INITIATOR	MECHANICAL PROPERTIES	DO NOT SCALE DRAWING
	DELAY	YP	UNLESS OTHERWISE SPECIFIED
		TS	DIMENSIONS ARE IN INCHES
		EL2	TOLERANCES ON DECIMALS ±
		RA	FRACTIONS ± 1/16 ANGLES ±
		BH	
NEXT ASSY	USED ON	RH	
APPLICATION			

ORIGINAL DATE OF DRAWING 19 OCT 1956
DRAFTSMAN CHECKER ENGR ENGR ENGR ENGR
G.R BUCK
J.D MATLACK

PART NO. 8796542

U.S. ARMY MUNITIONS COMMAND
PICATINNY ARSENAL, DOVER, NEW JERSEY 07801

BOX, PACKING, AMMUNITION, FOR INITIATOR, CARTRIDGE ACTUATED, M3A2, M3A1C OR M5A2.

SIZE	CODE IDENT NO.	
D	19203	8796542
SCALE	UNIT WT.	SHEET

SMUPA FORM 1041 DEC 69

REVISIONS			
SYM	DESCRIPTION	DATE	APPROVAL
A		09-12-68	
B	NOR 7201184-4	11-21-72	
C	SEE NOR 9216934-C	1/11/90	T.P.B.

FOR PROCUREMENT: N00104-15-N-B125 - 2/2/2015

LIST OF PARTS

LINE NO.	NAME OF PART	NO. REQD.	MATERIAL KIND	MATERIAL GRADE	DRAWING OR SPEC NUMBER	REMARKS
1	AMMO & SPL WPNS GEN SPEC FOR				MIL-A-2550*	
2						
3	BOX (OUTER)	1	FIBERBOARD	V3C,STYLE FTC	PPP-B-636	B,C,D,E
4						
5	FILLER, END	A	CHIPBOARD		COMMERCIAL	
6						
7	FILLER, SIDE	A	CHIPBOARD		COMMERCIAL	
8	FILLER, TOP	A	CHIPBOARD		COMMERCIAL	
9	STRIP, SEALING	A			5184814	
10						
11						
12						
13						
14						
15						
16						
17						
18						
19						
20						
21						
22						
23						
24						
25						

A- AS REQUIRED.
B- TYPE CF, CLASS WEATHER-RESISTANT VARIETY SW "B" OR "C" FLUTE.
C- APPLY MARKING TO BOX BY PRINTING, STAMPING OR STENCILING.
D- LENGTH OF FLAPS AT BODY AND COVER JOINTS SHALL BE APPROXIMATELY EQUAL TO THE DEPTH OF THE BOX. BODY JOINTS STITCHES MUST NOT PROJECT ABOVE INTERIOR SURFACE.
E- GSA STOCK OF APPROXIMATE SIZE MAY BE USED WITH SUITABLE DUNNAGE FOR SMALL ORDERS PROVIDING APPROVAL IS OBTAINED BY THE PROCURING ACTIVITY AND CONSIDERED ECONOMICALLY FEASIBLE BY THE SUPPLIER.

BOX, OUTER

18 3/16 X 13 15/16 X 6 1/16 INSIDE DIMENSIONS
TOLERANCE ON INSIDE DIMESIONS ± 1/16
ADVISORY O.D. 18 15/16 X 14 11/16 X 6 5/16.

FILLER, SIDE

18. MIN X 6. MIN X 1/16 THICK

FILLER, END

13 1/2 MIN X 6. MIN X 1/16 THICK

FILLER, TOP

17 1/2 MIN X 12 1/2 MIN X 1/16 THICK

LINE NO.	WEIGHT (ESTIMATED PART	POUNDS
1	BOX, FBRBD (OUTER) (1)	3.5
2	BOX, FBRBD (INNER) (32)	10.8
3	INITIATORS (32)	28.8
4	BAGS, FILLERS ETC	3.2
5	TOTAL	46.3

DISTRIBUTION STATEMENT C: Distribution authorized to U.S. Government and their contractors, administrative or operational use. 4-10-91. Other requests for this document shall be referred to Commanding Officer, Naval Ordnance Station, Indian Head, MD 20640-5000.

PACKING INSTRUCTIONS

INSERT 32 INITIATORS (IN BOX INNER) ON ENDS IN A 8 X 4. X 1. PATTERN.
INSERT AN END FILLER AT EACH END AND A SIDE FILLER ALONG EACH SIDE.
INSERT END, SIDE AND TOP FILLERS IF REQUIRED FOR TIGHT PACKING.
PLACE COVER IN POSITION. FOR SEALING INSTRUCTIONS SEE DRAWING 5184814.

MARKING INSTRUCTIONS

THE BOX SHALL BE MARKED IN ACCORDANCE WITH DRAWING 5184814 EXCEPT FOR THE FOLLOWING ADDITIONS:-
BOX PACKED "()()-()()" (INSERT MONTH AND YEAR PACKED)
INITIATOR LOT (INSERT LOT NUMBER OF INITIATOR)
CARTRIDGE LOT (INSERT LOT NUMBER OF CARTRIDGE)
THE DOT MARKING SHALL BE:- "EXPLOSIVE POWER DEVICES CLASS C - HANDLE CAREFULLY - KEEP FIRE AWAY".
THE DESCRIPTIVE NOMENCLATURE OF THE ITEM PACKED SHALL BE: "32 INITIATOR CARTRIDGE ACTUATED ( ) ( ) ( ) ( ) ( ) ( ) WITH CARTRIDGE M73". ← NOTE 1
THE NSN AND DODIC ← NOTE 2
THE CUBICAL DISPLACEMENT SHALL BE:- "1.01"

NOTES:-
ALL MARKING TO BE LOCATED AS SPECIFIED ON DRAWING 5184814.

1- INSERT APPLICABLE INITIATOR NUMBER.
2- INSERT NSN AND DODIC.

MARKING FOR METAL PARTS SHIPMENT

SEE MIL-STD-129. (MARKING TO BE APPLIED ON LABELS; ONE ATTACHED ON TOP AND ONE TO SIDE OF BOX)

MARKING INSTRUCTIONS (FOR NAVY USE)

SIZE OF LETTERS AND FIGURES SHALL BE AS SPECIFIED ON DRAWING 5184814.

NSN ← NOTE 1
INITIATOR CRTG ACTUATED ( ) ( ) ( ) ( ) ( ) ( ) WITH CRTG M73. ← NOTE 2
DWG NO. ()()()()()()()() ← NOTE 3
QTY ()() ← NOTE 4
GROSS WT ()() LBS ← NOTE 5 CU. ()() ← NOTE 6
LOT NO. ← NOTE 7
MIPR NO. ()()()()()() ← NOTE 8

NOTES:-
1- INSERT NSN AND DODIC
2- INSERT APPLICABLE INITIATOR.
3- INSERT APPLICABLE DRAWING NUMBER.
4- INSERT QUANTITY PACKED.
5- INSERT GROSS WEIGHT.
6- INSERT CUBICAL DISPLACEMENT.
7- INSERT LOT NUMBER PER MIL-STD-1168.
8- INSERT MIPR NUMBER. (TO BE SUPPLIED BY CONTRACTING OFFICER)

INSTRUCTIONS FOR REUSE OF BOXES AND PACKAGING MATERIALS

SEE DRAWING 5184814.

STORAGE AND SHIPPING INFORMATION (DO NOT MARK ON PACKAGE)

THE EXPLOSIVE HAZARD(QUANTITY-DISTANCE) SHALL BE:- "CLASS 1."
THE STORAGE COMPATIBILITY SHALL BE:-GROUP "B," "E" OR "N".

FOR LEVEL B OR DOMESTIC SHIPMENT.

FOR BOX FIBERBOARD (INNER) SEE DRAWING D8796541.

PART NO 9216934

		MECHANICAL PROPERTIES	DO NOT SCALE DRAWING	ORIGINAL DATE OF DRAWING 29 APR 1966	U.S. ARMY MUNITIONS COMMAND PICATINNY ARSENAL, DOVER, NEW JERSEY 07801
	INITIATOR	YP	UNLESS OTHERWISE SPECIFIED DIMENSIONS ARE IN INCHES	DRAFTSMAN	BOX, FIBERBOARD (OUTER) ALTERNATIVE PACKING, AMMUNITION, FOR INITIATOR, CARTRIDGE ACTUATED, M3A2, M3A1C OR M5A2.
	DELAY	TS	TOLERANCES ON DECIMALS ±	CHECKER	
		EL2	FRACTIONS ± 1/16 ANGLES ±	ENGR	
		RA		ENGR	
		BH		ENGR	
NEXT ASSY	USED ON	RH		H.M. WEINER	SIZE D / CODE IDENT NO. 19203 / 9216934
APPLICATION				G.R. BUCK	SCALE / UNIT WT. / SHEET

SMUPA FORM 1041 DEC 69

FOR PROCUREMENT: N00104-15-N-B125 - 2/2/2015

SPECIAL PACKAGING INSTRUCTION

CODE ID	SPI NO. (TPO)
98747	F01-271-7161
	SHEET 1 OF 4

PART OR DRAWING NO.	NATIONAL STOCK NO.	CURRENT REV
MULTIPLE PART NUMBERS	1377-01-271-7161 ES	

ITEM NOMENCLATURE	ORIGINAL DATE
INITIATOR, PROPELLANT ACTUATED	14233

ILL. K. KNIGHTON
P.S. R. McCLOY
CHK. D. STEPHENS
AUTH. L. SAVIKIS

DODPOPHM/USA/DOD/AF70/TR14002

MILITARY PRESERVATION IAW MIL-STD-2073

SERVICEABLE METHOD: 41
UNSERVICEABLE METHOD: 41

QUP 001 ▷3
ICQ 000

CLEANING & DRYING: IAW MIL-STD-2073
PRESERVATIVE: N/A

MARKING IAW MIL-STD-129

SPECIAL MARKINGS:

A) SPI NO. F01-271-7161
MARK THE SPI NUMBER ON THE IDENTIFICATION SIDE OF CONTAINER.

B) PROPER SHIPPING NAME: CARTRIDGES, POWER DEVICE
UN0276

C) UN POP MARKING: (UN) 4G/Y25/S/**
USA/DOD/AF70

**THE LAST TWO DIGITS OF THE YEAR DURING WHICH THE PACKAGING WAS MANUFACTURED.

D) REUSABLE CONTAINER & DUNNAGE DO NOT DESTROY.

NOTE: THE ABOVE POP MARKINGS ARE FOR DOD USE ONLY.

CLOSURE:

LEVEL A: IAW: ASTM D6251
LEVEL B: IAW: ASTM D1974 SEALING METHOD C

PACKING AS SPECIFIED BELOW AND BILL OF MATERIALS

LEVEL	SPEC	STYLE	TYPE	CL	VRTY	GR	TR
A	ASTM D6251	A	III	2			B
B	ASTM D5118	RSC				V3c	

	LEVEL A	LEVEL B
GROSS CU FT	SEE NOTICE 2	1.043
GROSS WT LBS	SEE NOTICE 2	25
DESIGN FRAGILITY G	60	60

	LENGTH	WIDTH	DEPTH
CNTR I.D.			
LEVEL A:	SEE NOTICE 2		
LEVEL B:	10	10	16
CNTR O.D.			
LEVEL A:	SEE NOTICE 2		
LEVEL B:	10 3/8	10 3/8	16 3/4
ITEM DIM	VARIES		
ITEM WT.	VARIES		

REVISIONS		
LTR	DESCRIPTION	DATE

P/N	QTY REQD	NOMENCLATURE OR DESCRIPTION	SIZE: (INCHES UNLESS SPECIFIED) TOLERANCES ON FRAC. ± 1/8, DECIMAL ± .10, ANGLES ± 1°	MATERIAL SPECIFICATION
-5	A/R	TAPE, PACKAGING	3 X AS REQUIRED	ASTM D5486 TYPE I OR V
-4	1	BARRIER BAG	AS REQUIRED	MIL-DTL-117 TYPE I, CL. F, STYLE 1 ▷1
-3	1	WRAP	AS REQUIRED	MIL-PRF-81705 TYPE I, CL. 1 OR EQUAL ▷1
-2	A/R	CUSHIONING	AS REQUIRED	A-A-1898 GRADE II ▷2
-1	1	CONTAINER, SHIPPING	10 X 10 X 16 (ID)	ASTM D5118 RSC, V3c ▷2 ▷3

SPI NO. F01-271-7161

FOR PROCUREMENT: N00104-15-N-B125 - 2/2/2015

MUNITION NOTICES

NOTICE 1: CLASS 1 (EXPLOSIVE) MATERIAL OWNED BY THE DEPARTMENT OF DEFENSE (DOD) PACKAGED PRIOR TO JANUARY 1, 1990 IN ACCORDANCE WITH THE PACKAGING REQUIREMENTS IN EFFECT AT THAT TIME ARE EXCEPTED FROM THE REQUIREMENTS OF PERFORMANCE ORIENTED PACKAGING (POP) PROVIDED THE PACKAGING HAVE MAINTAINED THEIR INTEGRITY AND THE GOODS ARE DECLARED AS GOVERNMENT OWNED GOODS PACKAGED PRIOR TO JANUARY 1, 1990. THIS CLAUSE DOES NOT APPLY TO COMMERCIAL AIR SHIPMENTS. (REF DLAD 4145.41/AFJI 24-210.)

NOTICE 2: FOR LEVEL A PACKING REQUIREMENTS: THE LEVEL B PACKS SHALL BE OVERBOXED IN A LEVEL A SPECIFIED CONTAINER SHOWN ON PAGE 1 UNDER PACKAGING LEVEL A. MARK THE OUTSIDE OF THE OVERBOX "OVERPACK." THE SIZE AND WEIGHT OF THE OVERBOX WILL VARY DEPENDING ON THE NUMBER OF ITEMS BEING SHIPPED. USE FILLER PAD OF ASTM-D4727, CF, DOM, GR 275 (OR EQUAL) TO ENSURE A TIGHT FIT IN THE OVERBOX.

NOTICE 3: VARIATIONS TO THE PACKAGING REQUIREMENTS OF THE SPI ARE AUTHORIZED IN ACCORDANCE WITH TITLE 49 CFR 178.601(G)(4), VARIATION 4.

NOTICE 4: SEE SPIRES FOR A COMPLETE LISTING OF NSN's ASSIGNED TO THIS SPI.

NOTICE 5: THIS SPI IS NOT AUTHORIZED FOR USE WITHOUT PROPER HAZARD CLASSIFICATION. UNLESS A FINAL HAZARD CLASSIFICATION HAS BEEN ISSUED, A COPY OF THE VALID INTERIM HAZARD CLASSIFICATION LETTER MUST ACCOMPANY EACH SHIPMENT.

INTERNATIONAL STANDARDS FOR PHYTOSANITARY MEASURES
REVISION OF ISPM NO. 15
REVISION OF WOOD PACKAGING MATERIAL FOR INTERNATIONAL TRADE

THE FOLLOWING STATEMENT IS IN COMPLIANCE WITH THE UNITED NATIONS-IMPLEMENTED RESTRICTIONS ON WOOD PACKAGING MATERIAL (WPM). THIS REQUIREMENT IS SPECIFICALLY CONCERNED WITH INVASIVE SPECIES SUCH AS THE PINEWOOD NEMATODE. WPM IS DEFINED AS WOOD PALLETS, SKIDS, LOAD BOARDS, PALLET COLLARS, WOODEN BOXES, REELS, DUNNAGE, CRATES, FRAMES, AND CLEATS. THE STATEMENT BELOW CITES THE REQUIREMENTS IN DETAIL AND COVERS LUMBER FOR BUILDING CONTAINERS AND PALLETS USED FOR DELIVERIES, RESULTING IN SHIPMENTS WORLDWIDE (DIRECT, OR THROUGH AIR LOGISTICS CENTERS (ALC), CONTAINER CONSOLIDATION POINTS (CCP), OR OTHER BASES).

WOODEN LUMBER, WOODEN PALLET AND PACKAGING/CONTAINER STATEMENT:

ALL WOODEN LUMBER, WOODEN PALLETS, AND WOODEN CONTAINERS PRODUCED ENTIRELY OR IN PART OF WOOD PACKAGING MATERIAL (WPM) SHALL BE CONSTRUCTED FROM DEBARKED WOOD IN ADDITION TO THE APPLICATION OF HEAT-TREATED (HT) MATERIAL (HT TO 56 DEGREES CENTIGRADE OR 133 DEGREES FAHRENHEIT FOR 30 MINUTES). CERTIFICATION/MARKING IS REQUIRED BY AN ACCREDITED AGENCY RECOGNIZED BY THE AMERICAN LUMBER STANDARDS COMMITTEE (ALSC). FOR REFERENCE DOCUMENTATION, SEE LATEST REVISION OF "INTERNATIONAL STANDARDS FOR PHYTOSANITARY MEASURES (ISPM NO. 15), "REGULATION OF WOOD PACKAGING MATERIAL IN INTERNATIONAL TRADE."

NOTES

1. WRAP ITEM IN REF.-3 AND PLACE IN BARRIER BAG, REF.-4. EVACUATE AIR AND SEAL.

2. CUSHION BAG WITH REF.-2, PLACE IN CONTAINER, REF.-1, USING ADDITIONAL CUSHIONING TO PREVENT MOVEMENT.

3. MAY PLACE UP TO 20 BAGGED ITEMS IN SHIPPING CONTAINER, REF.-1.

FOR PROCUREMENT: N00104-15-N-B125 - 2/2/2015

SPECIAL PACKAGING INSTRUCTION	CODE ID 98747	SPI NO. (TPO) F01-271-7161
ITEM NOMENCLATURE INITIATOR, PROPELLANT ACTUATED		SHEET 3 OF 4

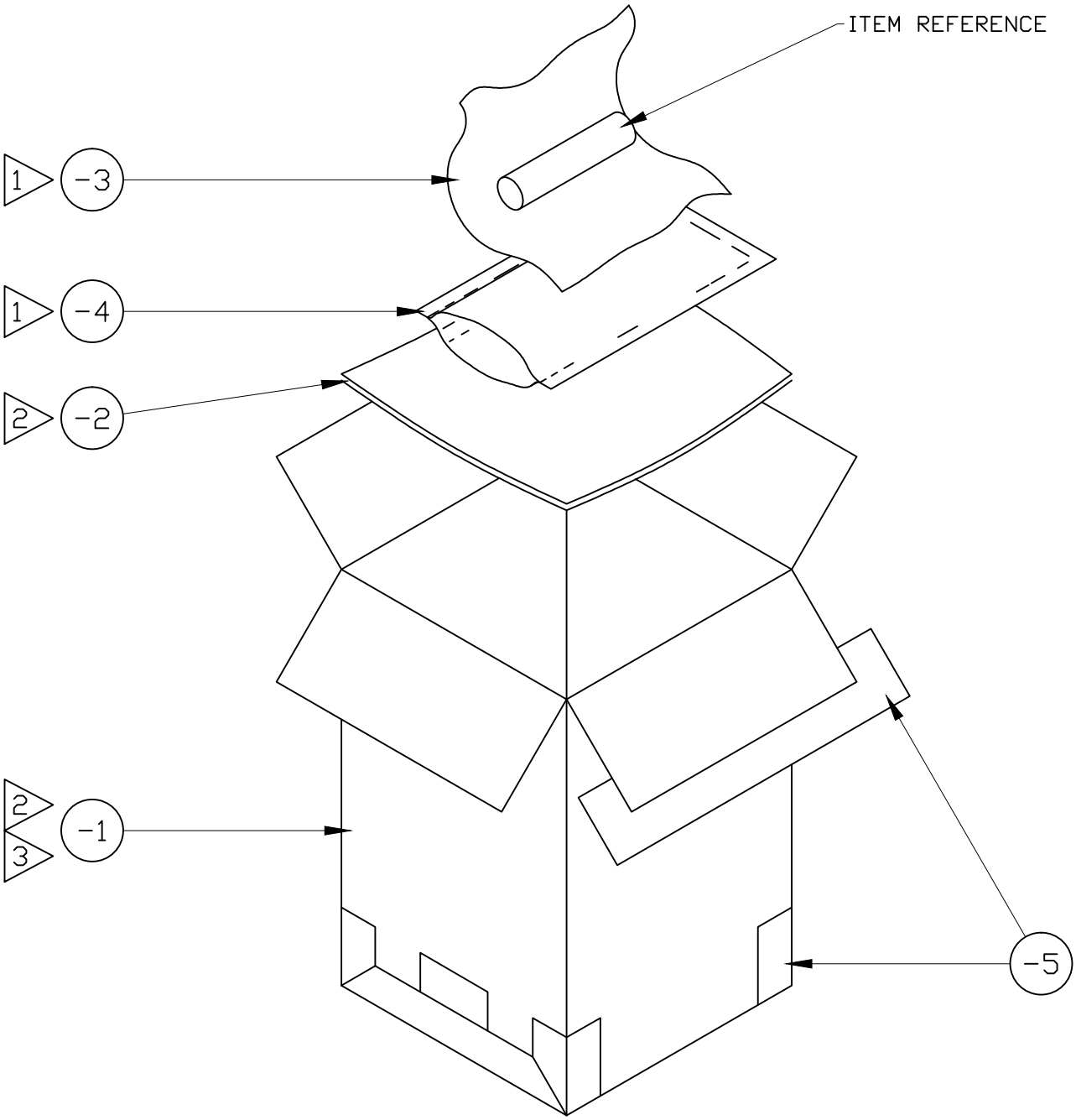

FOR PROCUREMENT: N00104-15-N-B125 - 2/2/2015

SPECIAL PACKAGING INSTRUCTION	CODE ID 98747	SPI NO. (TPO) F01-271-7161
ITEM NOMENCLATURE INITIATOR, PROPELLANT ACTUATED		SHEET 4 OF 4

PALLETIZATION PROCEDURE FOR LEVEL B PACK

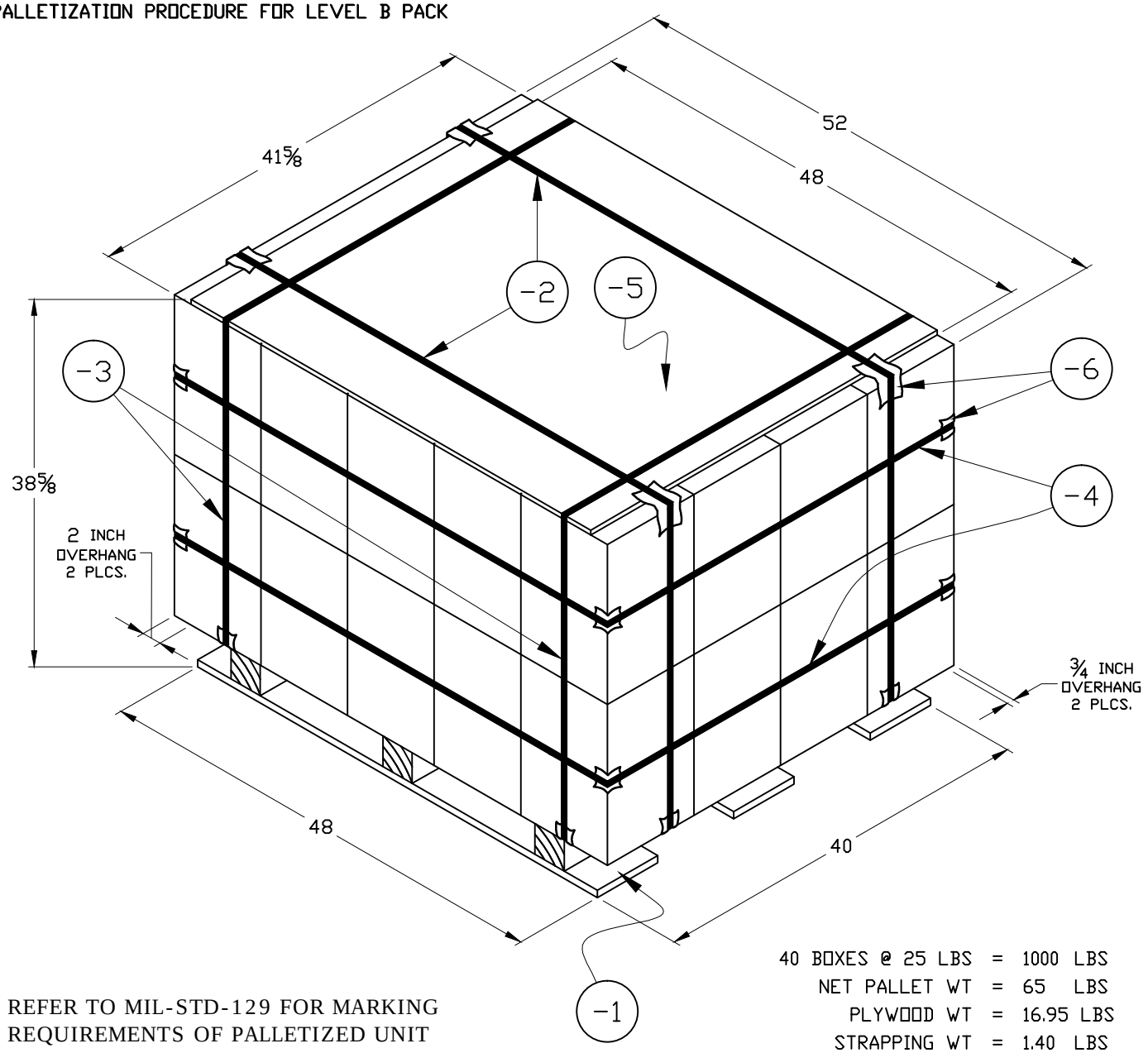

REFER TO MIL-STD-129 FOR MARKING REQUIREMENTS OF PALLETIZED UNIT LOADS OF AMMUNITION.

40 BOXES @ 25 LBS	=	1000 LBS
NET PALLET WT	=	65 LBS
PLYWOOD WT	=	16.95 LBS
STRAPPING WT	=	1.40 LBS
		1083.35 LBS

CUBE OF PALETIZED LOAD = 48.4

P/N	QTY REQD	NOMENCLATURE OR DESCRIPTION	SIZE: (INCHES UNLESS SPECIFIED) TOLERANCES ON FRAC. ± 1/8, DECIMAL ± .10, ANGLES ± 1°	MATERIAL SPECIFICATION
-6	20	EDGE PROTECTORS		NSN 8135-00-145-0070 (OR EQUAL)
-5	1	PLYWOOD	48 X 41 5/8 X 3/8	A-A-55057 TYPE A
-4	2	STRAPPING, STEEL & SEALS	206 X 3/4 X .023	ASTM D3953 TYPE 1, REG DUTY, FIN B, GRADE 2
-3	2	STRAPPING, STEEL & SEALS	173 X 3/4 X .023	ASTM D3953 TYPE 1, REG DUTY, FIN B, GRADE 2
-2	2	STRAPPING, STEEL & SEALS	190 X 3/4 X .023	ASTM D3953 TYPE 1, REG DUTY, FIN B, GRADE 2
-1	1	PALLET, 4-WAY ENTRY	40 X 48	MIL-DTL-15011 STYLE 1, SIZE A, TYPE I, CLASS 1

FOR PROCUREMENT: N00104-15-N-B125 - 2/2/2015

INCH-POUND
MIL-I-46559B
31 January 1990
SUPERSEDING
MIL-I-46559A(MU)
30 July 1969 and
Amendment 1
16 July 1973

MILITARY SPECIFICATION

INITIATOR, CARTRIDGE ACTUATED, M3A2, METAL PARTS ASSEMBLY

This specification is approved for use by all Departments and Agencies of the Department of Defense.

1. SCOPE

1.1 Scope. This specification covers the requirements for the M3A2 Cartridge Actuated Initiator Metal Parts Assembly (see 6.1).

2. APPLICABLE DOCUMENTS

2.1 Government documents.

2.1.1 Specifications, standards, and handbooks. The following specification, standards, and handbooks form a part of this document to the extent specified herein. Unless otherwise specified, the issues of these documents shall be those listed in the issue of the Department of Defense Index of Specifications and Standards (DODISS) and supplement thereto, cited in the solicitation (see 6.2).

SPECIFICATIONS

MILITARY

MIL-A-2550	Ammunition, General Specification For

STANDARDS

MILITARY

MIL-STD-105	Sampling Procedures and Tables for Inspection by Attributes
MIL-STD-109	Quality Assurance Terms and Definitions
MIL-STD-413	Visual Inspection Guide for Elastomeric O-rings

(Unless otherwise indicated, copies of federal and military specifications, standards, and handbooks are available from Military Specifications and Standards, Bldg 4D, 700 Robbins Avenue, Philadelphia, PA 19111-5094.)

Beneficial comments (recommendations, additions, deletions) and any pertinent data which may be of use in improving this document should be addressed to: Commanding Officer, Naval Ordnance Station, Standardization Branch (3730), Indian Head, MD 20640-5000, by using the self-addressed Standardization Document Improvement Proposal (DD Form 1426) appearing at the end of this document or by letter.

AMSC N/A FSC 1377

DISTRIBUTION STATEMENT A. Approved for public release; distribution is unlimited.

FOR PROCUREMENT: N00104-15-N-B125 - 2/2/2015

2.1.2 Other Government documents, drawings, and publications. The following other Government documents, drawings, and publications form a part of this document to the extent specified herein. Unless otherwise specified, the issues are those cited in the solicitation.

DRAWINGS

NAVAL ORDNANCE STATION, INDIAN HEAD, MD (CAGE Code 19200 and 19203)

8595822	Initiator, Cartridge Actuated, Metal Parts Assembly
8796541	Box, Fiberboard (Inner) Packing, Ammunition, for Initiator, Cartridge Actuated, M3A2 or M5A2
8796542	Box, Packing, Ammunition, for Initiator, Cartridge Actuated, M3A2 or M5A2
9216934	Box, Fiberboard (Outer) Alternative Packing, Ammunition, for Initiator, Cartridge Actuated, M3A2 or M5A2

U.S. AIR FORCE

TPO 00-932-5031	Initiator, Cartridge Actuated, M3A2

(Application for copies should be addressed to: Commanding Officer, Naval Ordnance Station, Data Control Branch (Code 3720), Indian Head, MD 20640-5000.)

2.2 Order of precedence. In the event of a conflict between the text of this document and the references cited herein, the text of this document takes precedence. Nothing in this document, however, supersedes applicable laws and regulations unless a specific exemption has been obtained.

3. REQUIREMENTS

3.1 Materials. All materials used in the manufacture of the initiators shall conform strictly to the specifications referred to on the respective drawings unless specific approval in writing covering a departure therefrom has been obtained from the cognizant Navy design activity prior to manufacture. When alternate materials or methods of manufacture are specified on the drawings, the bidder's selections shall be clearly stated in the proposal.

3.2 First article. When specified in the contract or purchase order (see 6.2), a sample shall be subjected to first article inspection (see 4.4 and 6.3).

3.3 Raw material. The contractor shall be responsible for selecting from the classification list contained in the raw material specification the surface and physical condition of the raw material intended for use in manufacture.

3.4 Physical properties. Physical properties required by the drawing shall be uniform throughout the part within specificed tolerances. Requirements for all alloy steel parts shall be achieved by quenching and tempering.

3.5 Hydrostatic pressure. The subassembly consisting of a cap, chamber, and plug simulating the firing pin housing, without firing pin hole and with an O-ring, shall withstand a constant internal pressure of 5500 to 6500 pounds per square inch (psi) for 15 seconds, minimum (min), without application of any external load other than that applied by the liquid pressure and shall show no evidence of leakage or mechanical failure (see 4.6.2).

3.6 Firing pin release. The firing pin of the assembled initiator, less safety pin, cartridge, cartridge retainer, and chamber, shall release from the cocked position when the application of an axial load of 20 to 35 pounds has withdrawn the initiator pin ¾ inch, maximum (max).

FOR PROCUREMENT: N00104-15-N-B125 - 2/2/2015

3.7 Initiator pin security. The initiator pin of the assembled initiator, less cartridge, cartridge retainer, and chamber, shall not withdraw beyond the safety pin when subjected to an axial load of 200 to 220 pounds. Application of the load shall not cause permanent deformation of the safety pin.

3.8 Metal parts assembly. Parts shall be combined to produce an assembly which conforms to the requirements of the metal parts assembly drawing. All threaded joints shall be assembled handtight.

3.9 Protective finish. Protective finish shall be in accordance with the applicable specifications and shall apply to all surfaces of the component regardless of contour configuration.

3.10 Residual magnetism. The metal parts assembly shall not deflect the indicator of the compass more than five degrees in either direction using the procedures in 4.6.6.

3.11 Workmanship. The requirements for workmanship are as specified on the applicable drawings, referenced specifications, and the following:

3.11.1 Metal defects. All components shall be free from cracks, splits, cold shuts, inclusions, porosity, or any similar defect.

3.11.2 Burr. No part shall have a burr which might interfere with the assembly or function of the item or which might be injurious to personnel handling the item.

3.11.3 Foreign matter. No part or assembly shall contain chips, dirt, grease, rust, corrosion, or other foreign matter.

4. QUALITY ASSURANCE PROVISIONS

4.1 Responsibility for inspection. Unless otherwise specified in the contract or purchase order (see 6.2), the contractor is responsible for the performance of all inspection requirements (examinations and tests) as specified herein. Except as otherwise specified in the contract or purchase order, the contractor may use his own or any other facilities suitable for the performance of the inspection requirements specified herein, unless disapproved by the Government. The Government reserves the right to perform any of the inspections set forth in the specification where such inspections are deemed necessary to ensure supplies and services conform to prescribed requirements.

4.1.1 Responsibility for compliance. All items shall meet all requirements of sections 3 and 5. The inspection set forth in this specification shall become a part of the contractor's overall inspection system or quality program. The absence of any inspection requirements in the specification shall not relieve the contractor of the responsibility of ensuring that all products or supplies submitted to the Government for acceptance comply with all requirements of the contract. Sampling inspection, as part of manufacturing operations, is an acceptable practice to ascertain conformance to requirements; however this does not authorize submission of known defective material, either indicated or actual, nor does it commit the Government to acceptance of defective material.

4.1.2 Quality assurance terms and definitions. Reference shall be made to MIL-STD-109 to define the quality assurance terms used.

4.1.3 Inspection. Inspection shall be in accordance with MIL-A-2550.

FOR PROCUREMENT: N00104-15-N-B125 - 2/2/2015

4.2 Classification of inspections. The inspection requirements specified herein are classified as follows:

a. First article inspection (see 4.4)
b. Quality conformance inspection (see 4.5).

4.3 Inspection conditions. Unless otherwise specified, all inspections shall be performed under the following conditions:

a. Temperature: Room ambient 68 to 77 °F
b. Altitude: Sea level
c. Humidity: 50 percent relative, max
d. Atmospheric pressure: 14.7 psia.

4.4 First article inspection. At the beginning of regular production, the contractor shall submit an initial production sample to a Government approved facility for evaluation. The sample shall consist of 5 metal parts assemblies, 9 sets of unassembled parts, 1 set of unassembled parts without plating or final protective finish, and 50 shear pins from the same lot of shear pins tested by the contractor. The sample shall be manufactured in the same manner, using the same materials, equipment, processes and procedures as used in regular production. All parts and materials, including packaging and packing, must be the same as will be used for regular production and shall be obtained from the same source of supply. After inspection and provisional acceptance at source, the first article sample shall be inspected for all requirements of the drawings and specifications. The Government reserves the right to require new first article samples until such time as an acceptable sample is submitted (see 6.3).

4.5 Quality conformance inspection.

4.5.1 Lot.

4.5.1.1 Submission of product. Unless otherwise specified by the contracting activity, formation and identification of lots shall be in accordance with MIL-STD-105.

4.5.1.2 Size of lot. For the purpose of identification and shipment, the shipping lots of metal parts assemblies shall consist of 1200 initiators, max, provided the homogeneity requirements of inspection lots have been retained.

4.5.2 Examination. One-hundred percent examination shall be performed for all critical defects. Examination for major and minor defects shall be performed on a defect basis in accordance with the classification of defects. Four power (4X) magnification may be used in performing visual examination for such defects as burr and foreign matter. Inspection for rubber O-rings shall be in accordance with MIL-STD-413. When compliance with the applicable requirement is in doubt as a result of visual examination, the characteristic shall be measured or gaged to determine acceptability.

4.5.2.1 Retainer, Cartridge, Drawing 8593013, covering a detail of Drawing 8595822.

Characteristic	Defect	Method of Inspection
Critical		
1	Metering slots in base missing	Visual

FOR PROCUREMENT: N00104-15-N-B125 - 2/2/2015

Characteristic	Defect	Method of Inspection
Major		
101	Pitch diameter of thread, max	Gage
102	Minor diameter of thread, max	Gage
103	Concentricity of cavity with pitch diameter of thread	Gage
104	Perpendicularity of pitch diameter of thread with base	Gage
105	Symmetry of metering slots in base with body	Gage
106	Diameter of cavity, max	Gage
107	Depth of cavity	Gage
108	Depth of bottom of counterbore	Gage
109	Depth of metering slots in base	Gage
110	Total length	Gage
111	Length of effective thread, min	Gage
112	Width of metering slot, on base	Gage
113	Internal radius at mouth of cavity missing or incorrect	Gage
114	Drill point on base, max	Gage
115	Number of elongated slots incorrect	Visual
116	Thread damaged or not full	Visual
117	Metal defective	Visual
118	Protective finish inadequate or defective	Visual
119	Burr	Visual
120	Foreign matter present	Visual
Minor		
201	Pitch diameter of thread, min	Gage
202	Diameter of body	Gage
203	Diameter of cavity, min	Gage
204	Diameter of head	Gage
205	Length of elongated slots	Gage
206	Length of head	Gage
207	Width of elongated slots	Gage
208	Location of elongated slots	Gage
209	Angle between head and body	Gage
210	Location of metering slots	Visual
211	Profile of elongated slots	Visual
212	Marking missing, incorrect, or illegible	Visual
213	Radius missing or incorrect, except as otherwise classified	Visual
214	Surface finish improper except as otherwise classified	Visual

4.5.2.2 Chamber, Drawing 8593014 covering a detail of Drawing 8595822.

Critical

None defined

Major		
101	Pitch diameter of large thread, min	Gage
102	Major diameter of large thread, min	Gage
103	Pitch diameter of small thread, min	Gage

FOR PROCUREMENT: N00104-15-N-B125 - 2/2/2015

Characteristic	Defect	Method of Inspection
104	Major diameter of small thread, min	Gage
105	Concentricity of counterbore with pitch diameter of large thread	Gage
106	Concentricity of datum diameter with small thread	Gage
107	Diameter of counterbore	Gage
108	Depth of cavity	Gage
109	Thickness of wall, min	Gage
110	Location of datum diameter	Gage
111	Profile of gas port	Gage
112	Thread damaged or not full	Visual
113	Chamfer at base of cavity missing or incorrect	Visual
114	Metal defective	Visual
115	Protective finish inadequate or defective	Visual
116	Surface finish at end of gas port improper	Visual
117	Burr	Visual
118	Foreign matter present	Visual
Minor		
201	Pitch diameter of large thread, max	Gage
202	Pitch diameter of small thread, max	Gage
203	Diameter of cavity	Gage
204	Diameter of hole	Gage
205	Diameter of small thread pilot	Gage
206	Diameter of large thread pilot	Gage
207	Depth of counterbore	Gage
208	Total length	Gage
209	Length of large thread pilot	Gage
210	Length of end of large thread	Gage
211	Length of gas port	Gage
212	Thickness of wall, max	Gage
213	Location of small thread	Gage
214	Marking missing, incorrect, or illegible	Visual
215	Radius or chamfer missing or incorrect	Visual
216	Surface finish improper, except as otherwise classified	Visual

4.5.2.3 Pin, Initiator, Drawing 8595403, covering a detail of Drawing 8595822.

Critical

None defined

Major

101	Concentricity of groove in head with body	Gage
102	Symmetry of head with body	Gage
103	Diameter of body	Gage
104	Diameter of groove in body, min	Gage
105	Diameter of groove in head, min	Gage
106	Length to shoulder at head, min	Gage
107	Location of groove in head	Gage

FOR PROCUREMENT: N00104-15-N-B125 - 2/2/2015

Characteristic	Defect	Method of Inspection
108	Location of groove in body	Gage
109	Profile of groove in body	Gage
110	Profile of groove in head	Gage
111	Metal defective	Visual
112	Protective finish inadequate or defective	Visual
113	Surface finish on body and body groove improper	Visual
114	Burr	Visual
115	Foreign matter present	Visual
Minor		
201	Diameter of groove in head, max	Gage
202	Diameter of pull hole	Gage
203	Diameter of undercut, min	Gage
204	Length to shoulder at head, max	Ggae
205	Width of head	Gage
206	Width of shoulder at body groove	Gage
207	Width of groove in head	Gage
208	Width of undercut, max, if applicable	Gage
209	Total length	Gage
210	Thickness of head	Gage
211	Location of pull hole	Gage
212	Angle at base of body	Gage
213	Profile of head	Gage
214	Marking missing, incorrect, or illegible	Visual
215	Radius or chamfer missing or incorrect	Visual
216	Surface finish improper, except as otherwise classified	Visual

4.5.2.4 Cap, Drawing 8595404, covering a detail of Drawing 8595822.

Critical

None defined

Major

101	Pitch diameter of large thread, max	Gage
102	Minor diameter of large thread, max	Gage
103	Pitch diameter of small thread, max	Gage
104	Minor diameter of small thread, max	Gage
105	Concentricity of pitch diameter of large thread with pitch diameter of small thread including perpendicularity with base of large thread cavity	Gage
106	Concentricity of hole counterbore with hole	Gage
107	Concentricity of hole with pitch diameter of small thread including perpendicularity with base of large thread cavity	Gage
108	Symmetry of flats with pitch diameter, large thread	Gage
109	Diameter of hole	Gage
110	Diameter of hole counterbore	Gage
111	Diameter of pin holes	Gage
112	Depth of large thread cavity	Gage

FOR PROCUREMENT: N00104-15-N-B125 - 2/2/2015

Characteristic	Defect	Method of Inspection
113	Depth of small thread cavity	Gage
114	Length of effective large thread, min	Gage
115	Length of effective small thread, min	Gage
116	Thickness of wall	Gage
117	Height, max	Gage
118	Internal radius at base of large thread cavity missing or incorrect	Visual
119	Thread damaged or not full	Visual
120	Metal defective	Visual
121	Protective finish inadequate or defective	Visual
122	Surface finish of hole improper	Visual
123	Burr	Visual
124	Foreign matter present	Visual
Minor		
201	Pitch diameter of large thread, min	Gage
202	Pitch diameter of small thread, min	Gage
203	Pitch diameter of set screw thread	Gage
204	Minor diameter of set screw thread, max	Gage
205	Diameter of boss	Gage
206	Diameter of flange holes	Gage
207	Diameter of groove	Gage
208	Depth of hole counterbore	Gage
209	Total length	Gage
210	Length between flange holes	Gage
211	Length of flange	Gage
212	Width across body flats	Gage
213	Width of groove	Gage
214	Width of flange	Gage
215	Thickness of flange	Gage
216	Location of pin holes	Gage
217	Location of groove	Gage
218	Location of flange hole	Gage
219	Location of set screw holes	Gage
220	Location of initiator pin hole	Gage
221	Marking missing, incorrect, or illegible	Visual
222	Radius or chamfer missing or incorrect except as otherwise classified	Visual
223	Surface finish improper, except as other classified	Visual

4.5.2.5 Pin, Safety, Drawing 8595405, covering a detail of Drawing 8595822.

Critical

None defined

Major

101	Diameter of wire	Gage
102	Profile incorrect	Visual
103	Metal defective	Visual

FOR PROCUREMENT: N00104-15-N-B125 - 2/2/2015

Characteristic	Defect	Method of Inspection
104	Protective finish inadequate or defective	Visual
105	Burr or sharp edge	Visual
106	Foreign matter present	Visual
Minor		
201	Diameter of head	Gage
202	Total length	Gage
203	Radius missing or incorrect	Visual

4.5.2.6 Spring, Initiator, Drawing 8595406, covering a detail of Drawing 8595822.

Critical

None defined

Major		
101	Load at specified heights	Gage
102	Height, solid, max	Gage
103	Ends incorrect	Visual
104	Protective finish inadequate or defective	Visual
105	Burr or sharp edges	Visual
106	Foreign matter present	Visual
Minor		
201	Diameter outside, closed, max	Gage
202	Diameter inside, min	Gage

4.5.2.7 Pin, Firing, Drawing 8596168 covering a detail of Drawing 8595822.

Critical

None defined

Major		
101	Concentricity of body with cavity	Gage
102	Concentricity of body with striker	Gage
103	Diameter of body	Gage
104	Diameter of cavity	Gage
105	Diameter of striker	Gage
106	Diameter of ball hole, max	Gage
107	Depth of ball hole counterbore, max	Gage
108	Location of datum diameter	Visual
109	Radial profile of striker	Gage
110	Radial location of ball holes	Visual
111	Metal defective	Visual
112	Protective finish inadequate or defective	Visual
113	Surface finish improper	Visual
114	Burr or sharp edge	Visual
115	Foreign matter present	Visual

FOR PROCUREMENT: N00104-15-N-B125 - 2/2/2015

Characteristic	Defect	Method of Inspection
Minor		
201	Diameter of cavity counterbore	Gage
202	Diameter of ball hole, min	Gage
203	Diameter of ball hole counterbore	Gage
204	Diameter of midsection	Gage
205	Depth of cavity counterbore	Gage
206	Depth of cavity	Gage
207	Depth of ball hole counterbore, min	Gage
208	Total length	Gage
209	Length from body to striker	Gage
210	Length to ball hole	Gage
211	Drill point cavity, max	Visual
212	Radius or chamfer missing or incorrect	Visual

4.5.2.8 Housing, Firing Pin, Drawing 8596169, covering a detail of Drawing 8595822.

Critical

None defined

Major		
101	Pitch diameter of small thread, min	Gage
102	Major diameter of small thread, min	Gage
103	Pitch diameter of large thread, min	Gage
104	Major diameter of large thread, min	Gage
105	Concentricity of counterbore with cavity	Gage
106	Concentricity of flange with pitch diameter of small thread	Gage
107	Concentricity of groove with flange	Gage
108	Concentricity of striker hole with cavity	Gage
109	Concentricity of pitch diameter of large thread with cavity	Gage
110	Concentricity of cavity with pitch diameter of small thread, including perpendicularity with face of flange	Gage
111	Perpendicularity of boss face with pitch diameter of large thread	Gage
112	Diameter of cavity, max	Gage
113	Diameter of external datum location	Gage
114	Diameter of groove	Gage
115	Diameter of flange, min	Gage
116	Diameter of small thread undercut, min	Gage
117	Length from rear flange to cavity	Gage
118	Length to internal datum diameter	Gage
119	Width of rear flange	Gage
120	Angle of external datum diameter	Gage
121	Angle at internal datum diameter	Gage
122	Height of boss	Gage
123	Profile of groove	Gage
124	Radius at root of boss	Gage
125	Thread damaged or not full	Visual
126	Metal defective	Visual

FOR PROCUREMENT: N00104-15-N-B125 - 2/2/2015

characteristic	Defect	Method of Inspection
127	Protective finish inadequate or defective	Visual
128	Surface finish in cavity improper	Visual
129	Burr or sharp corner	Visual
130	Foreign matter present	Visual
Minor		
201	Pitch diameter of small thread, max	Gage
202	Pitch diameter of large thread, max	Gage
203	Diameter of cavity, min	Gage
204	Diameter of flange, max	Gage
205	Diameter of body	Gage
206	Diameter of counterbore	Gage
207	Diameter of undercut in cavity, if applicable	Gage
208	Diameter of striker hole	Gage
209	Diameter of small thread pilot	Gage
210	Depth to bottom of cavity	Gage
211	Total length	Gage
212	Length from small thread pilot to flange	Gage
213	Length across flanges	Gage
214	Length of body	Gage
215	Width of undercut in cavity, if applicable	Gage
216	Width of undercut, small thread	Gage
217	Width of groove	Gage
218	Location of flange	Gage
219	Radius or chamfer missing or incorrect, except as otherwise classified	Visual
220	Surface finish improper, except as otherwise classified	Visual

4.5.2.9 Seal, Drawing 10524102 covering a detail of Drawing 8595822.

Critical

None defined

Major

101	Diameter outside, min	Gage
102	Width, min	Gage
103	Thickness, min	Gage
104	Cut, cracked, or split	Visual
105	Flash	Visual
106	Foreign matter present	Visual

Minor

201	Diameter outside, max	Gage
202	Width, max	Gage
203	Thickness, max	Gage

FOR PROCUREMENT: N00104-15-N-B125 - 2/2/2015

4.5.2.10 Assembly, Drawing 8595822, less 8595403, 8595405, 8593013, and 8593014.

Characteristic	Defect	Method of Inspection
Critical		
1	Protrusion of firing pin	Gage
2	Steel ball missing	Gage
Major		
None defined		
Minor		
None defined		

4.5.2.11 Assembly, Drawing 8595822.

Critical		
1	Any part missing, except as otherwise classified	Visual
2	Improper assembly	Visual
Major		
101	Initiator pin not free to rotate	Manual
102	Safety pin loose or deformed	Manual/Visual
103	Marking missing, incorrect, or illegible	Visual
Minor		
201	Protective cap missing	Visual
202	Protective finish inadequate or defective	Visual

4.5.2.12 Box, Fiberboard (Inner) Packing Ammunition Drawing 8796541

Critical		
None defined		
Major		
None defined		
Minor		
201	Contents loose	Manual
202	Cut or damaged	Visual
203	Poor workmanship	Visual

4.5.2.13 Box, Packing, Ammunition, Drawing 8796542.

Critical		
None defined		
Major		
None defined		

FOR PROCUREMENT: N00104-15-N-B125 - 2/2/2015

Characteristic	Defect	Method of Inspection
Minor		
201	Contents loose	Manual
202	Broken or damaged	Visual
203	Number of units contained incorrect	Visual
203	Marking missing, incorrect, or illegible	Visual

4.5.2.14 Box, Fiberboard (Outer) Alternative, Packing, Drawing 9216934.

Critical

None defined

Major

None defined

Minor

201	Contents loose	Manual
202	Box broken or damaged	Visual
203	Number of units contained incorrect	Visual
204	Marking missing, incorrect, or illegible	Visual
205	Tape incomplete	Visual

4.5.3 Inspection testing. The following tests shall be performed in accordance with 4.6.

4.5.3.1 Hardness. Fifty units from each heat treated lot of components shall be tested for compliance with the requirements on the applicable drawing. Failure of any unit to comply with the drawing requirements shall be cause for rejection of the lot of components.

4.5.3.2 Hydrostatic pressure. Each subassembly shall be subjected to the hydrostatic pressure test. Failure of any subassembly to comply with 3.5 shall be cause for rejection of the subassembly.

4.5.3.3 Firing pin release. The initiator pin of each subassembly shall be subjected to the firing pin release test. Failure of any subassembly to comply with 3.6 shall be cause for rejection of the subassembly.

4.5.3.4 Initiator pin security. The initiator pin of each subassembly shall be subjected to the initiator pin security test. Failure of any subassembly to comply with 3.7 shall be cause for rejection of the subassembly.

4.5.3.5 Protective finish. The number of units for protective finish tests shall be in accordance with the applicable specification. Failure of any unit in the inspection sample to comply with the requirements of the applicable specification shall be cause for rejection of the lot.

4.5.3.6 Residual magnetism. Each assembly shall be subjected to the test for excessive residual magnetism. Failure of any unit in the inspection sample to comply with 3.10 shall be cause for rejection of the assembly as specified in 4.6.6.

FOR PROCUREMENT: N00104-15-N-B125 - 2/2/2015

4.6 Test methods and procedures.

4.6.1 Hardness. Prior to the application of protective finish, a hardness tester shall be used to determine compliance with the requirements of the applicable drawing.

4.6.2 Hydrostatic pressure. Prior to the application of protective finish, the cap and chamber shall be mounted in the device, using a fixture for properly sealing all openings and subjected to the internal hydrostatic pressure to determine compliance with 3.5.

4.6.3 Firing pin release. The subassembly shall be secured in the fixture. A pull shall be applied to the initiator pin in the longitudinal direction in conjunction with the fixture which registers the amount of pull.

4.6.4 Initiator pin security. The subassembly shall be secured in the fixture with the safety pin in place. A pull shall be applied to the initiator pin in the longitudinal direction in conjunction with the fixture which registers the amount of pull. The test shall be performed with the safety pin in both positions.

4.6.5 Protective finish. Test procedures for protective finish shall be in accordance with the applicable specification referenced on the applicable drawing.

4.6.6 Residual magnetism. The assembly shall be tested for excessive residual magnetism using an approved compass in an area free of local magnetic effects by placing the assembly 5 inches from the end and at the same height as the compass, in a north-south horizontal position (cap end at south) with the compass set in an east-west heading. The assembly shall be moved at a speed no greater than 10 feet per minute past the compass for its entire length, rotated 90 degrees in the horizontal position about its longitudinal axis and moved slowly back past the compass. This procedure shall be repeated for each 90 degrees rotation of the assembly for four full passes.

4.7 Inspection of packaging. The sampling and inspection of the packaging, packing, and container marking shall be in accordance with section 5.

5. PACKAGING.

5.1 Packing and marking. Packing and marking shall be levels A or B as specified by the contracting activity:

Level A	In accordance with Drawings 8796541 and 8796542
Level B	In accordance with Drawings 8796541 and 9216934

5.2 Air Force packaging. Air Force packaging shall be in accordance with TPO 00-932-5031.

6. NOTES.

(This section contains information of a general or explanatory nature that may be helpful but is not mandatory.)

6.1 Intended use. The assembly will ultimately be loaded and used in conjunction with other propellant actuated devices in aircrew emergency escape systems.

6.2 Acquisition requirements. Acquisition documents must specify the following:

a. Title, number, and date of this specification
b. Issue of DODISS to be cited in the solicitation, and if required, the specific issue of individual documents referenced (see 2.1)

FOR PROCUREMENT: N00104-15-N-B125 - 2/2/2015

c. If first article inspection is required (see 3.2 and 6.3)
d. The responsible inspection activity (see 4.1)
e. Level of marking and packing (see 5.1)

6.3 First article. When a first article inspection is required, the items should be a first article sample. The first article should consist of 5 metal parts assemblies, 9 sets of unassembled parts, 1 set of unassembled parts without plating or final protective finish, and 50 shear pins. The contracting officer should include specific instructions in acquisition documents regarding arrangements for examinations, approval of first article test results and disposition of first articles. Invitations for bids should provide that the Government reserves the right to waive the requirement for samples for first article inspection to those bidders offering a product which has been previously acquired or tested by the Government, and that bidders offering such products, who wish to rely on such production or test, must furnish evidence with the bid that prior Government approval is presently appropriate for the pending contract.

6.4 Definition.

6.4.1 Mechanical failure. Mechanical failure is any deformation or breakage of a part, the occurrence of which is other than a design function.

6.5 Subject term (keyword) listing.

Ejection systems, aircrew
Emergency escape systems, aircrew
Escape systems, aircrew
Life-saving systems, aircrew

6.6 Changes from previous issue. Asterisks are not used in this revision to identify changes with respect to the previous issue due to the extensiveness of the changes.

Custodian:
Navy-OS
Air Force-99

Preparing activity:
Navy-OS
(Project 1377-0959)

Review activity:
Air Force-70

*U.S. GOVERNMENT PRINTING OFFICE: 1990--704-034/30293

FOR PROCUREMENT: N00104-15-N-B125 - 2/2/2015

INCH-POUND
MIL-I-46625C
31 January 1990
SUPERSEDING
MIL-I-46625B(MU)
12 June 1969 and
AMENDMENT 2
20 July 1973

MILITARY SPECIFICATION

INITIATOR, CARTRIDGE ACTUATED, M3A2, ASSEMBLY

This specification is approved for use by all Departments and Agencies of the Department of Defense.

1. SCOPE

1.1 Scope. This specification covers the requirements for the M3A2 Cartridge Actuated Initiator (see 6.1).

2. APPLICABLE DOCUMENTS

2.1 Government documents.

2.1.1 Specifications, standards, and handbooks. The following specifications, standards, and handbooks form a part of this document to the extent specified herein. Unless otherwise specified, the issues of these documents shall be those listed in the issue of the Department of Defense Index of Specifications and Standards (DODISS) and supplement thereto, cited in the solicitation (see 6.2).

SPECIFICATIONS

MILITARY

MIL-A-2550	Ammunition, General Specification For
MIL-I-14802	Initiator, Cartridge Actuated, M3A2, Remanufactured Metal Parts Assembly
MIL-I-46559	Initiator, Cartridge Actuated, M3A2, Metal Parts Assembly

STANDARDS

MILITARY

MIL-STD-105	Sampling Procedures and Tables for Inspection by Attributes
MIL-STD-109	Quality Assurance Terms and Definitions
MIL-STD-453	Inspection, Radiographic
MS28741	Hose Assembly, Detachable End Fitting, Medium Pressure

(Unless otherwise indicated, copies of federal and military specifications, standards, and handbooks are available from Military Specifications and Standards, Bldg 4D, 700 Robbins Avenue, Philadelphia, PA 19111-5094.)

Beneficial comments (recommendations, additions, deletions) and any pertinent data which may be of use in improving this document should be addressed to: Commanding Officer, Naval Ordnance Station, Standardization Branch (3730), Indian Head, MD 20640-5000, by using the self-addressed Standardization Document Improvement Proposal (DD Form 1426) appearing at the end of this document or by letter.

AMSC N/A FSC 1377

DISTRIBUTION STATEMENT A. Approved for public release; distribution is unlimited.

FOR PROCUREMENT: N00104-15-N-B125 - 2/2/2015

2.1.2 Other Government documents, drawings, and publications. The following other Government documents, drawings, and publications form a part of this document to the extent specified herein. Unless otherwise specified, the issues are those cited in the soliciation.

DRAWINGS

NAVAL ORDNANCE STATION, INDIAN HEAD, MD (CAGE Code 19200 and 19203)

DL8595821	Initiator, Cartridge Actuated, M3A2 Assembly
8594157	Cartridge, Impulse, M73 Assembly
8796541	Box, Fiberboard (Inner) Packing, Ammunition, for Initiators, Cartridge Actuated, M3A2 or M5A2
8796542	Box, Packing, Ammunition, for Initiator, Cartridge Actuated, M3A2 or M5A2
9216934	Box, Fiberboard (Outer) Alternative Packing, Ammunition, for Initiator, Cartridge Actuated, M3A2 or M5A2

U.S. AIR FORCE

TPO 00-932-5031	Initiator, Cartridge Actuated, M3A2

(Application for copies should be addressed to: Commanding Officer, Naval Ordnance Station, Data Control Branch (3720), Indian Head, MD 20640-5000.)

2.2 Order of precedence. In the event of a conflict between the text of this document and the references cited herein, the text of this document takes precedence. Nothing in this document, however, supersedes applicable laws and regulations unless a specific exemption has been obtained.

3. REQUIREMENTS

3.1 Materials. All materials used in the manufacture of the initiators shall conform strictly to the specifications referred to on the respective drawings unless specific approval in writing covering a departure therefrom has been obtained from the cognizant Navy design activity prior to manufacture. When alternate materials or methods of manufacture are specified on the drawings, the bidder's selections shall be clearly stated in the proposal.

3.2 Primary components. For the purpose of this specification, the M73 impulse cartridge (Drawing 8594157) is defined as a primary component. Only primary components from a single lot shall be used in a production lot of initiators. One primary component production lot may be used in more than one initiator production lot.

3.3 Firing pin release. The firing pin of the assembled initiator, less safety pin, cartridge, cartridge retainer, and chamber, shall release from the cocked position when the application of an axial load of 20 to 35 pounds has withdrawn the initiator pin 3/4 inch, maximum (max).

3.4 Initiator pin security. The initiator pin of the assembled initiator, less cartridge, cartridge retainer, and chamber, shall not withdraw beyond the safety pin when subjected to an axial load of 200 to 220 pounds. Application of the load shall not cause permanent deformation of the safety pin.

3.5 Breakaway torque. The initiator chamber and cap of the assembled initiator shall withstand a breakaway torque application of 400 inch-pounds without loosening or deformation (see 4.2.3.1).

FOR PROCUREMENT: N00104-15-N-B125 - 2/2/2015

3.6 Residual magnetism. The initiator shall not deflect the indicator of the compass more than five degrees in either direction using the procedures in 4.3.2.

3.7 Functional.

3.7.1 Ballistics. Initiators loaded with accepted cartridges and temperature conditioned shall perform within the pressure values and ignition delays specified in table I. Pressure values shall be recorded at the end of 15 feet of aircraft hose, assembly number MS28741-4.

TABLE I. *Pressure values.*

Temperature (°F)	Pressure (psi)		Ignition delay, max, milliseconds (see 6.5.2)
	Minimum	Maximum	
−60 to −70	550	1450	65
65 to 75	700	1550	65
195 to 205	700	1700	65

3.7.2 Misfires. There shall be no misfires.

3.7.3 Mechanical failures. The initiator shall function without mechanical failure (see 6.5.1).

3.8 Workmanship. Initiators shall be free of cracks, splits, incomplete or damaged threads on inlet and outlet ends, or other defects which might prevent proper mating with connecting parts or proper functioning of the device.

3.8.1 Metal defects. All components shall be free from cracks, splits, cold shuts, inclusions, porosity or any similar defect.

3.8.2 Burr. No part shall have a burr which might interfere with the assembly or function of the item or which might be injurious to personnel handling the item.

3.8.3 Foreign matter. No part or assembly shall contain chips, dirt, grease, rust, corrosion or other foreign matter.

3.9 Radiographic examination. Each initiator assembly shall be radiographically examined for defects as specified in 4.4.

3.10 Component parts. All component parts shall meet the requirements of MIL-I-14802 or MIL-I-46559 prior to assembly.

4. QUALITY ASSURANCE PROVISIONS

4.1 Responsibility for inspection. Unless otherwise specified in the contract or purchase order (see 6.2), the contractor is responsible for the performance of all inspection requirements (examinations and tests) as specified herein. Except as otherwise specified in the contract or purchase order, the contractor may use his own or any other facilities suitable for the performance of the inspection requirements specified herein, unless disapproved by the Government. The Government reserves the right to perform any of the inspections set forth in the specification where such inspections are deemed necessary to ensure supplies and services conform to prescribed requirements.

FOR PROCUREMENT: N00104-15-N-B125 - 2/2/2015

4.1.1 Responsibility for compliance. All items shall meet all requirements of sections 3 and 5. The inspection set forth in this specification shall become a part of the contractor's overall inspection system or quality program. The absence of any inspection requirements in the specification shall not relieve the contractor of the responsibility of ensuring that all products or supplies submitted to the Government for acceptance comply with all requirements of the contract. Sampling inspection, as part of manufacturing operations, is an acceptable practice to ascertain conformance to requirements; however, this does not authorize submission of known defective material, either indicated or actual, nor does it commit the Government to acceptance of defective material.

4.1.2 Quality assurance terms and definitions. Reference shall be made to MIL-STD-109 to define the quality assurance terms used.

4.1.3 Inspection. Inspection shall be in accordance with MIL-A-2550 and MIL-STD-453.

4.2 Inspection conditions. Unless otherwise specified, all inspections shall be performed under the following conditions:

a. Temperature: Room ambient 68 to 77 °F
b. Altitude: Sea level
c. Humidity: 50 percent relative, max
d. Atmospheric pressure: 14.7 psia

4.2.1 Lot.

4.2.1.1 Submission of product. Unless otherwise specified by the contracting activity, formation and identification of lots shall be in accordance with MIL-STD-105.

4.2.1.2 Size of lot. A lot shall consist of an identifiable group of assembled initiators containing metal parts assemblies produced by a homogeneous process and loaded with one lot of accepted cartridges.

4.2.2 Examination. One-hundred percent examination shall be performed for all critical defects. Examination for major and minor defects shall be performed in accordance with the classification of defects. Four power (4X) magnification may be used for inspection of such defects as burr and foreign matter.

4.2.2.1 Cartridge, Impulse M73, Drawing 8594157, covering a detail of Drawing 8595821 or 10524101.

Characteristic	Defect	Method of Inspection
Critical		
1	Mixed cartridges	Visual
2	Metal defective	Visual
3	Marking missing, incorrect, or illegible	Visual
Major		
101	Foreign matter present	Visual
Minor		
201	Case scratched or dented	Visual

FOR PROCUREMENT: N00104-15-N-B125 - 2/2/2015

4.2.2.2 Assembly, Drawing 10524101 or 8595821 less Drawing 8595404, 8593013, 8593014, and 8359536.

Characteristic	Defect	Method of Inspection
Critical		
1	Mixed initiators	Visual
2	Initiator not in cocked position	Visual
3	Safety pin missing or improperly engaged	Visual
4	O-ring missing	Visual
Major		
101	Thread damaged	Visual
102	Foreign matter present	Visual
Minor		
201	O-ring not lubricated	Visual

4.2.2.3 Assembly, Drawing 10524101 or 8595821, less Drawings 8593014 and MIL-C-5501/11.

Critical		
1	Cartridge loose	Visual/Manual
2	Cartridge retainer loose	Visual/Manual
3	Metering groove of retainer missing	Visual
4	Elongated hole of cartridge retainer missing	Visual
Major		
None defined		
Minor		
None defined		

4.2.2.4 Assembly, Drawing 10524101 or Drawing 8595821.

Critical		
1	Location of cartridge retainer	Gage/x-ray
2	Any part missing	Visual/x-ray
3	Improper assembly	Visual/x-ray
4	Foreign matter in gas port	Visual
Major		
101	Length from cap boss face to gas port face, max	Gage
102	Height of cap, max	Gage
103	Cap set screw missing, loose or above flush	Visual
Minor		
201	Total length, max	Gage
202	Location of marking incorrect	Visual
203	Protective finish inadequate or defective	Visual
204	Protective cap missing	Visual

FOR PROCUREMENT: N00104-15-N-B125 - 2/2/2015

4.2.2.5 Box, Fiberboard (Inner) Packing Ammunition, Drawing 8796541.

Characteristic	Defect	Method of Inspection
Critical		
None defined		
Major		
None defined		
Minor		
201	Gap between body and cover, max	Manual
202	Contents loose	Manual
203	Metal ends loose or distorted	Manual
204	Cut or damaged through all impregnated layers	Visual
205	Marking missing, incorrect, or illegible	Visual
206	Tape incomplete, torn, or badly wrinkled	Visual
207	Length of tear tab, min	Visual
208	Color of tape incorrect	Visual

4.2.2.6 Box, Packing Ammunition, Drawing 8796542.

Critical		
None defined		
Major		
None defined		
Minor		
201	Contents loose	Manual
202	Strapping missing, loose, broken, or improperly assembled	Manual/Visual
203	Contents of box exposed	Visual
204	Box damaged	Visual
205	Marking missing, incorrect, or illegible	Visual
206	Number of units incorrect	Visual

4.2.2.7 Box, Fiberboard (Outer) Alternative Packing Ammunition, Drawing 9216934.

Critical		
None defined		
Major		
None defined		
Minor		
201	Contents loose	Manual
202	Box broken or damaged	Visual
203	Number of units contained incorrect	Visual
204	Marking missing, incorrect, or illegible	Visual
205	Tape incomplete	Visual

FOR PROCUREMENT: N00104-15-N-B125 - 2/2/2015

4.2.3 Inspection testing. The following tests shall be performed in accordance with 4.3.

4.2.3.1 Breakaway torque. Each assembly shall be subjected to the breakaway torque test of the threaded joint between the cap and the chamber. Failure of any assembly to comply with 3.5 shall be cause for rejection of the assembly.

4.2.3.2 Residual magnetism. Each initiator shall be subjected to the test for excessive residual magnetism as specified in 4.3.2. Failure of any initiator to comply with 3.6 shall be cause for rejection of the initiator.

4.2.3.3 Firing pin release. The initiator pin of each subassembly shall be subjected to the firing-pin release test. Failure of any subassembly to comply with 3.3 shall be cause for rejection of the subassembly.

4.2.3.4 Initiator pin security. The initiator pin of each subassembly shall be subjected to the initiator pin security test. Failure of any unit to comply with 3.4 shall be cause for rejection of the subassembly.

4.2.3.5 Functional tests. The following tests shall be performed by the Government.

4.2.3.5.1 Ballistics. Twenty-one units shall be tested to determine compliance with 3.7.1. The units shall be temperature conditioned as provided in table II and 4.3.5.2. Failure of any unit to comply with 3.7.1 shall be cause for rejection of the lot.

TABLE II. *Conditioning temperature.*

Temperature (°F)	Sample size
−60 to −70	7
65 to 75	7
195 to 205	7

4.2.3.5.2 Retest. There shall be no retests.

4.2.3.5.3 Test failure. If a test failure is attributable to an assignable cause, excluding the test initiator, the original test results shall be discarded and that test reconducted.

4.3 Test methods and procedures.

4.3.1 Breakaway torque. A torque wrench set at the torque requirement specified in 3.5 shall be used in conjunction with a fixture to determine the adequacy of the joints. The chamber shall be secured in an air vise and the torque shall be applied to the cap.

4.3.2 Residual magnetism. The assembly shall be tested for excessive residual magnetism using an approved compass in an area free of local magnetic effects by placing the assembly 5 inches from the end at the same height as the compass, in a north-south horizontal position (cap end at south) with the compass set in an east-west heading. The assembly shall be moved at a speed not greater than 10 feet per minute past the compass for its entire length, rotated 90 degrees in the horizontal position about its longitudinal axis, and moved slowly back past the compass. This procedure shall be repeated for each 90 degrees rotation of the assembly for four full passes.

4.3.3 Firing pin release. The subassembly shall be secured in the fixture. A pull shall be applied to the initiator pin in the longitudinal direction in conjunction with the fixture which registers the amount of pull.

FOR PROCUREMENT: N00104-15-N-B125 - 2/2/2015

4.3.4 Initiator pin security. The subassembly shall be secured in the fixture with the safety pin in place. A pull shall be applied to the initiator pin in the longitudinal direction in conjunction with a fixture which registers the amount of pull. The test shall be performed with the safety pin in both positions.

4.3.5 Functional.

4.3.5.1 Ballistics. The test sample shall be rigidly supported in the fixture. The sample shall be tested within 5 minutes after removal from the conditioning chamber. When this time limit is exceeded, the sample shall be reconditioned in accordance with 4.3.5.2. Required pressure-time readings shall be taken as specified in 3.7.1.

4.3.5.2 Temperature conditioning. Each assembled initiator shall be conditioned for a period of time not less than 4 hours nor greater than 24 hours. When reconditioning initiators at −60 °F, all condensation shall be removed from the interior surfaces before returning the initiator to the conditioning chamber.

4.4 Radiographic examination. All assembled initiators shall be radiographically examined in accordance with MIL-STD-453, with the exception that an assembled M3A2 initiator will be used for the penetrameter. Any observable imperfections in components or assembly shall be cause for rejection. The initiators shall be positioned for the most revealing exposure, with the long axis of each assembly perpendicular to the rays of the X-ray machine. All initators shall be identified with serial numbers prior to X-ray examination. The serial numbers shall be in consecutive numerical order beginning with the number 001 in each production lot. Any missing serial numbers are to be identified on the X-rays. The initiators shall be arranged on boards or trays in consecutive order and each radiograph shall carry a permanent identification of the units displayed thereon. The radiographic plate identification shall include item nomenclature, the complete lot number assigned to that lot, the span of serial numbers displayed, and the contract number. Radiographs of the entire production lot shall accompany the ballistic sample to the activity conducting the production lot acceptance test. Defective initiators found during X-ray review are to be marked on the X-ray prior to shipment and those defective items shall be removed from the production lot. Film interpretation of the radiographs shall verify the presence and correct positioning of the following parts:

a. O-ring	P/N MS28755-214
b. Steel balls present (3 ea)	P/N MS19060-3
c. Firing pin	P/N 8596168
d. Spring initiator	P/N 8595406
e. Seal	P/N 10524102
f. Firing pin housing	P/N 8596169
g. Retainer, cartridge	P/N 8596013
h. Cap set screws, No. 10 (.190)	
i. Cartridge, Impulse, M73	P/N 8594157
j. Pin, initiator	P/N 8595403
k. Chamber	P/N 8593014
l. Cap	P/N 8595404

4.5 Inspection of packaging. The sampling and inspection of the packaging, packing, and container marking shall be in accordance with section 5.

5. PACKAGING

5.1 Packing and marking. Packing and marking shall be levels A or B as specified by the contracting activity:

Level A - In accordance with Drawings 8796541 and 8796542
Level B - In accordance with Drawings 8796541 and 9216934

5.2 Air Force packaging. Air Force packaging shall be in accordance with TPO 00-932-5031.

FOR PROCUREMENT: N00104-15-N-B125 - 2/2/2015

6. NOTES

(This section contains information of a general or explanatory nature that may be helpful but is not mandatory.)

6.1 Intended use. The M3A2 initiator assembly, loaded with the M73 impulse cartridge, is used in conjunction with other propellant actuated devices in aircrew emergency escape systems.

6.2 Acquisition requirements. Acquisition documents must specify the following:

a. Title, number, and date of this specification
b. Issue of DODISS to be cited in the solicitation, and if required, the specific issue of individual documents reference (see 2.1)
c. The responsible inspection activity (see 4.1)
d. Production lot size and test activity (see 4.2.1)
e. Direction for shipping radiographs of entire production lot along with ballistic sample to the activity conducting production lot acceptance tests (see 4.4)
f. Level of marking and packing (see 5.1)
g. Safety precautions (see 6.6).

6.3 Explosive hazard classification information.

Hazard Classification/Division: 1.4
Storage Compatibility Group: S
DOT Class: C
DOT Marking — Explosive Power Device — Class C — Handle Carefully — Keep Fire Away

6.4 Hazard notice. The initiator described herein and certain of its components are flammable, explosive, or both. Consequently it presents hazards in manufacture, handling, storage, and shipment. The contractor should recognize these hazards and take appropriate measures to guard and protect against fire, explosion, adverse environment, corrosive atmosphere, rough handling, and electrically induced incidents.

6.5 Definitions.

6.5.1 Mechanical failure. Mechanical failure is any deformation or breakage of a part, the occurrence of which is other than a design function.

6.5.2 Ingition delay. Ignition delay is the time measured between the firing pin striking the primer or ignition device and the first indication of pressure.

6.6 Safety precautions. The safety precaution requirements of "Contractor' Safety Manual for Ammunition, Explosives, and Related Dangerous Material" (DOD 4145.26M) are applicable and should be specified in the contract as required by the Federal Acquisition Regulation (FAR) 23.3. NOTE: When this specification is used as part of the description of work to be accomplished by a Government activity, the safety precaution requirements of "Ammunition and Explosives Ashore" (OP 5) should be made applicable.

6.7 Subject term (keyword) listing.

Ejection systems, aircrew
Emergency escape systems, aircrew
Escape systems, aircrew
Life-saving systems, aircrew

FOR PROCUREMENT: N00104-15-N-B125 - 2/2/2015

6.8 Changes from previous issue. Asterisks are not used in this revision to identify changes with respect to the previous issue because of the extensiveness of the changes.

Custodian:
Navy-OS
Air Force-99

Review activity:
Air Force-70

Preparing activity:
Navy-OS
(Project 1377-0958)

FOR PROCUREMENT: N00104-15-N-B125 - 2/2/2015

STANDARDIZATION DOCUMENT IMPROVEMENT PROPOSAL

INSTRUCTIONS

1. The preparing activity must complete blocks 1, 2, 3, and 8. In block 1, both the document number and revision letter should be given.
2. The submitter of this form must complete blocks 4, 5, 6, and 7.
3. The preparing activity must provide a reply within 30 days from receipt of the form.

NOTE: This form may not be used to request copies of documents, nor to request waivers, or clarification of requirements on current contracts. Comments submitted on this form do not constitute or imply authorization to waive any portion of the referenced document(s) or to amend contractual requirements.

I RECOMMEND A CHANGE:	1. DOCUMENT NUMBER	2. DOCUMENT DATE (YYMMDD)
	MIL-I-46625C	900131

3. DOCUMENT TITLE

INITIATOR, CARTRIDGE ACTUATED, M3A2, ASSEMBLY

4. NATURE OF CHANGE *(Identify paragraph number and include proposed rewrite, if possible. Attach extra sheets as needed.)*

5. REASON FOR RECOMMENDATION

6. SUBMITTER

a. NAME (Last, First, Middle Initial)	b. ORGANIZATION	
c. ADDRESS (Include Zip Code)	d. TELEPHONE (Include Area Code) (1) Commercial (2) AUTOVON (If applicable)	7. DATE SUBMITTED (YYMMDD)

8. PREPARING ACTIVITY

a. NAME	b. TELEPHONE (Include Area Code) (1) Commercial	(2) AUTOVON
Commanding Officer Naval Ordnance Station	(301) 743-4250	364-4250
c. ADDRESS (Include Zip Code) (Code 3730) Indian Head, MD 20640-5000	IF YOU DO NOT RECEIVE A REPLY WITHIN 45 DAYS, CONTACT: Defense Quality and Standardization Office 5203 Leesburg Pike, Suite 1403, Falls Church, VA 22041-3466 Telephone (703) 756-2340 AUTOVON 289-2340	