NOTE:

1. INTERPRET DRAWING IN ACCORDANCE WITH ASME Y14.5M-1994 AND ASME Y14.100-2000 WITH APPENDICES B,C,D AND E.
2. UNLESS OTHERWISE SPECIFED, REMOVE BURRS, BREAK SHARP EDGES .005-.020, FILLETS .020 MAX.

CLASSIFICATION OF CHARACTERISTICS (DOD-STD-2101)	
CRITICAL-	NONE
MAJOR-	NONE
MINOR-	ALL OTHER CHARACTERISTICS

REVISIONS			
REV	DESCRIPTION	DATE	APPROVAL

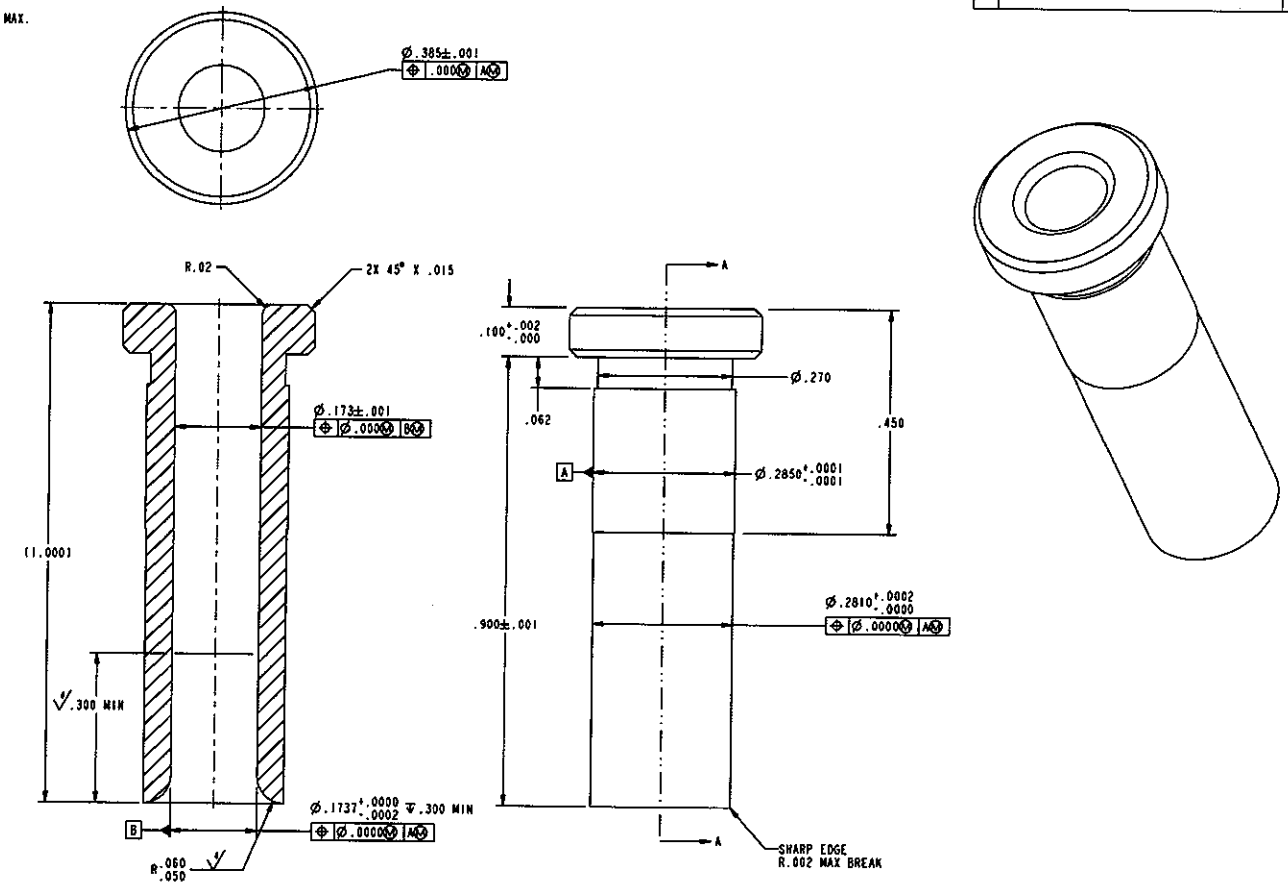

DISTRIBUTION STATEMENT C: Distribution authorized to U.S. Government agencies and their contractors administrative or operational use, 7-1-93. Other requests for this document shall be referred to Commander, Indian Head Division, Naval Surface Warfare Center, Indian Head, MD 20640-5035.

PVU-2/A CUP PRESS	PVU-2/A CUP PRESS
NEXT ASSY	USED ON
APPLICATION	

UNLESS OTHERWISE SPECIFIED DIMENSIONS ARE IN INCHES
GENERAL TOLERANCES
XX DECIMALS ± 0.01
XXX DECIMALS ± 0.001
ANGLES ± 5.0°

MATERIAL:
TOOL STEEL
AISI A2
Rc 58-62

DO NOT SCALE DRAWING

INDIAN HEAD DIVISION
NAVAL SURFACE WARFARE CENTER
INDIAN HEAD, MD 20640-5035

ENGINEER	
ENGINEER	
CHECKED	SKETCH APPROVED
DRAWN	2010/02/04
APPROVED FOR	Phillip R. Stigall DATE

DEPARTMENT OF THE NAVY

PVU-2/A CUP
DIE BUSHING

SIZE	CAGE CODE	DRAWING NUMBER
D	14083	SK09034-E213L-1

SCALE: 6.000 | WEIGHT: 1.21 lb | SHEET 1 OF 1

NOTE:

1. INTERPRET DRAWING IN ACCORDANCE WITH ASME Y14.5M-1994 AND ASME Y14.100-2000 WITH APPENDICES B,C,D AND E.
2. UNLESS OTHERWISE SPECIFED, REMOVE BURRS, BREAK SHARP EDGES .005-.020, FILLETS .020 MAX.

CLASSIFICATION OF CHARACTERISTICS (DOD-STD-2101)	
CRITICAL-	NONE
MAJOR-	NONE
MINOR-	ALL OTHER CHARACTERISTICS

REVISIONS			
REV	DESCRIPTION	DATE	APPROVAL

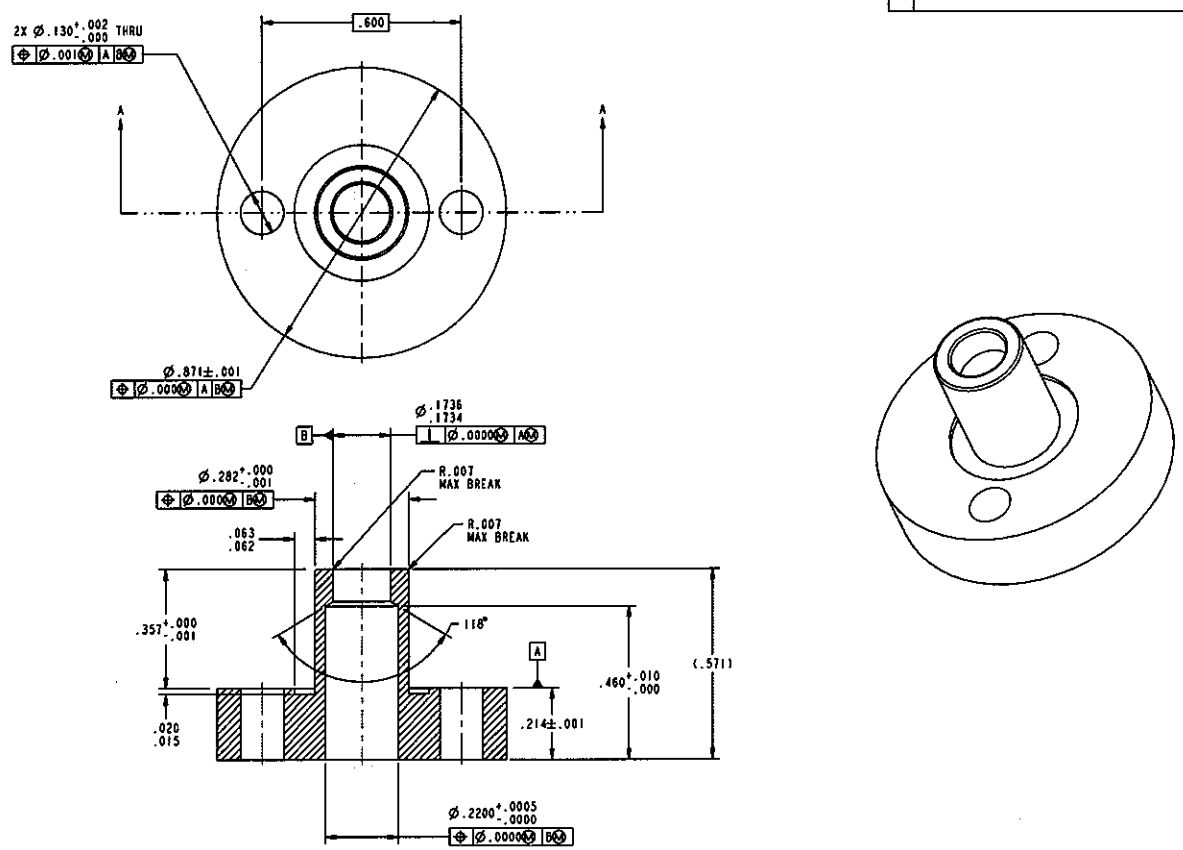

SECTION A-A

DISTRIBUTION STATEMENT C: Distribution authorized to U.S. Government agencies and their contractors administrative or operational use, 7-1-93. Other requests for this document shall be referred to Commander, Indian Head Division, Naval Surface Warfare Center, Indian Head, MD 20640-5035.

PVT-2/A CUP PRESS	PVT-2/A CUP PRESS
NEXT ASSY	USED ON
APPLICATION	

UNLESS OTHERWISE SPECIFIED DIMENSIONS ARE IN INCHES
GENERAL TOLERANCES
XX DECIMALS ± 0.01
XXX DECIMALS ± 0.005
ANGLES ± 5.0°
MATERIAL:
DO NOT SCALE DRAWING

INDIAN HEAD DIVISION
NAVAL SURFACE WARFARE CENTER
INDIAN HEAD, MD 20640-5035

ENGINEER
ENGINEER
CHECKED SKETCH APPROVED 2010/02/04
DRAWN
APPROVED FOR Phillip R. Stegall DATE

DEPARTMENT OF THE NAVY

PVU-2/A CUP DIE
BOTTOM STRIPPER

SIZE	CAGE CODE	DRAWING NUMBER
D	14083	SK09034-E213L-2

SCALE: 5.000 WEIGHT: 1.21 lb SHEET 1 OF 1

NOTE:

1. INTERPRET DRAWING IN ACCORDANCE WITH ASME Y14.5M-1994 AND ASME Y14.100-2000 WITH APPENDICES B,C,D AND E.

2. UNLESS OTHERWISE SPECIFED, REMOVE BURRS, BREAK SHARP EDGES .005-.020, FILLETS .020 MAX.

CLASSIFICATION OF CHARACTERISTICS (DOD-STD-2101)	
CRITICAL-	NONE
MAJOR-	NONE
MINOR-	ALL OTHER CHARACTERISTICS

REVISIONS			
REV	DESCRIPTION	DATE	APPROVAL

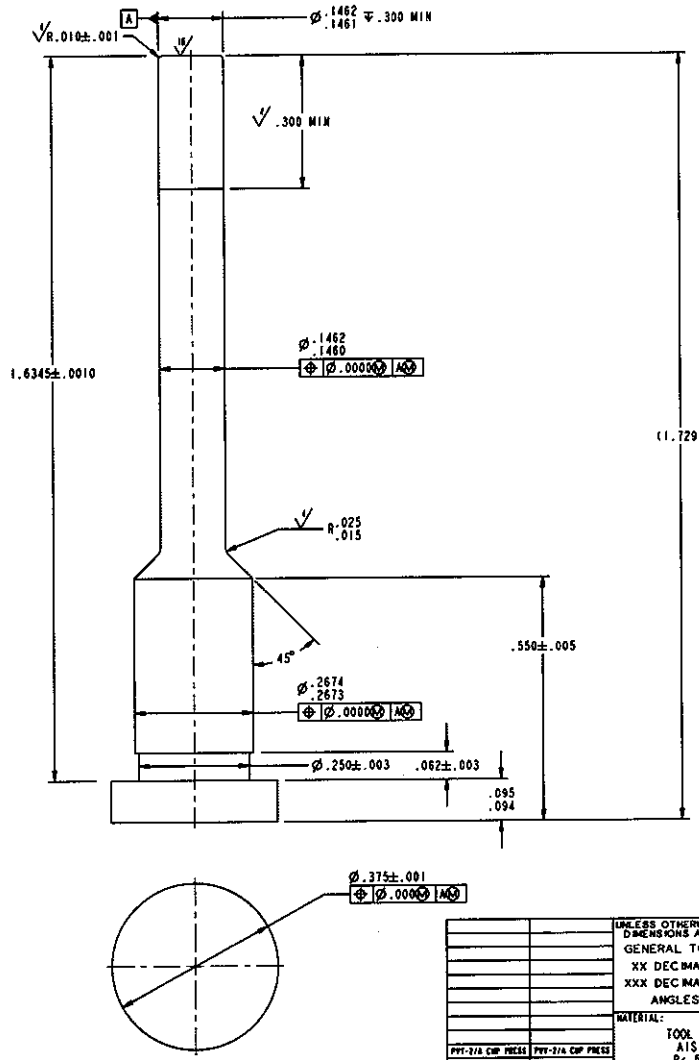

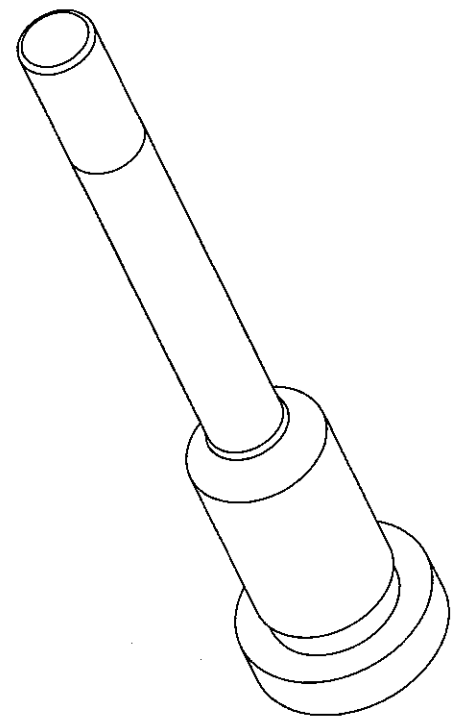

DISTRIBUTION STATEMENT C: Distribution authorized to U.S. Government agencies and their contractors administrative or operational use, 7-1-93. Other requests for this document shall be referred to Commander, Indian Head Division, Naval Surface Warfare Center, Indian Head, MD 20640-5035.

PVT-2/A CHP PRESS	PVT-2/A CHP PRESS
NEXT ASSY	USED ON
APPLICATION	

UNLESS OTHERWISE SPECIFIED DIMENSIONS ARE IN INCHES
GENERAL TOLERANCES
XX DECIMALS ± 0.01
XXX DECIMALS ± 0.005
ANGLES ± 5.0°

MATERIAL:
TOOL STEEL
AISI A2
Rc 57-59

DO NOT SCALE DRAWING

INDIAN HEAD DIVISION
NAVAL SURFACE WARFARE CENTER
INDIAN HEAD, MD 20640-5035

ENGINEER		
ENGINEER		
CHECKED	SKETCH APPROVED	
DRAWN	20100102704	
APPROVED FOR		DATE

DEPARTMENT OF THE NAVY

PVU-2/A CUP
DIE PUNCH

SIZE	CAGE CODE	DRAWING NUMBER
D	14083	SK09034-E213L-3

SCALE: 4.000 | WEIGHT: 1.21 lb | SHEET 1 OF 1

NOTE:

1. INTERPRET DRAWING IN ACCORDANCE WITH ASME Y14.5M-1994 AND ASME Y14.100-2000 WITH APPENDICES B,C,D AND E.
2. UNLESS OTHERWISE SPECIFED, REMOVE BURRS, BREAK SHARP EDGES .005-.020, FILLETS .020 MAX.
3. PRESS FIT Ø.125 DRILL BLANK INTO Ø.124 TO Ø.126 HOLE AND GRIND TO DIMENSIONS SHOWN 2 PLACES.

CLASSIFICATION OF CHARACTERISTICS (DOD-STD-2101)	
CRITICAL-	NONE
MAJOR-	NONE
MINOR-	ALL OTHER CHARACTERISTICS

REVISIONS			
REV	DESCRIPTION	DATE	APPROVAL

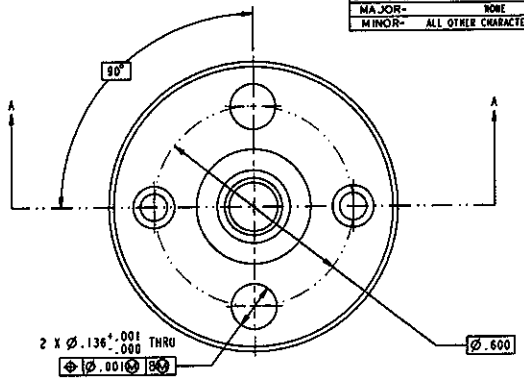

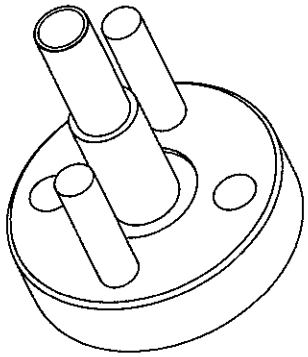

SCALE 6.000

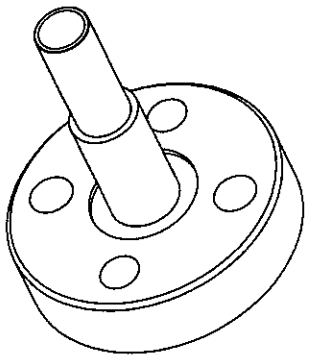

SCALE 6.000

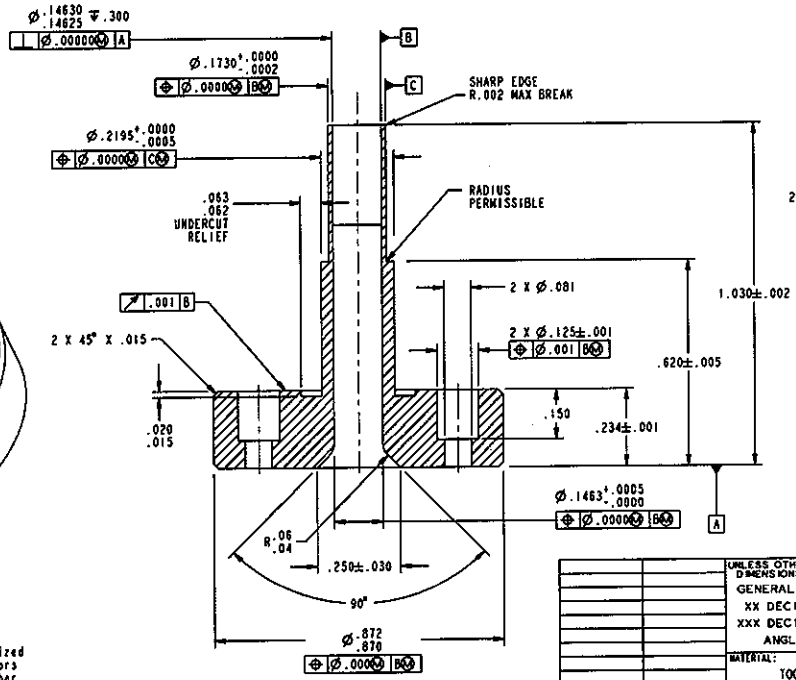

SECTION A-A

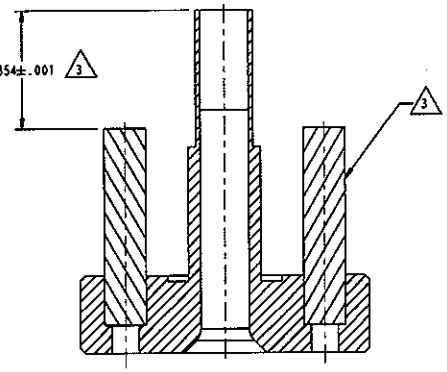

DISTRIBUTION STATEMENT C: Distribution authorized to U.S. Government agencies and their contractors administrative or operational use, 7-1-93. Other requests for this document shall be referred to Commander, Indian Head Division, Naval Surface Warfare Center, Indian Head, MD 20640-5035.

PVT-2/A CUP PRESS	PVT-2/A CUP PRESS
NEXT ASSY	USED ON
APPLICATION	

UNLESS OTHERWISE SPECIFIED DIMENSIONS ARE IN INCHES
GENERAL TOLERANCES
XX DECIMALS ± 0.01
XXX DECIMALS ± 0.001
ANGLES ± 0.5°

MATERIAL:
TOOL STEEL
AISI A2
Rc 57-60

DO NOT SCALE DRAWING

INDIAN HEAD DIVISION
NAVAL SURFACE WARFARE CENTER
INDIAN HEAD, MD 20640-5035

ENGINEER		
ENGINEER		
CHECKED	SKETCH APPROVED	
DRAWN	2010/02/04	
APPROVED FOR		DATE

DEPARTMENT OF THE NAVY

PVU-2/A CUP
DIE PINCH

SIZE	CAGE CODE	DRAWING NUMBER
D	14083	SK09034-E213L-4
SCALE: 4.000	WEIGHT: 1.21 lb	SHEET 1 OF 1

CLASSIFICATION OF CHARACTERISTICS (DOD-STD-2101)	
CRITICAL-	NONE
MAJOR-	NONE
MINOR-	ALL CHARACTERISTICS

REVISIONS			
REV	DESCRIPTION	DATE	APPROVAL
	SGR SK10007-E26HA1		

NOTES:

1. INTERPRET DRAWING IN ACCORDANCE WITH ASME Y14.100-2004 AND ASME Y14.5-2009, APPENDICES B-E.
2. MATERIAL: TOOL STEEL, AISI A2, Rc 55-60.
3. UNLESS OTHERWISE SPECIFIED:
   FINISH ALL SURFACES TO 32 MAX.
   REMOVE BURRS AND BREAK SHARP EDGES TO .005-.020.
   FILLETS .020 MAX.

CAD MAINTAINED. CHANGES SHALL BE INCORPORATED BY THE DESIGN ACTIVITY.

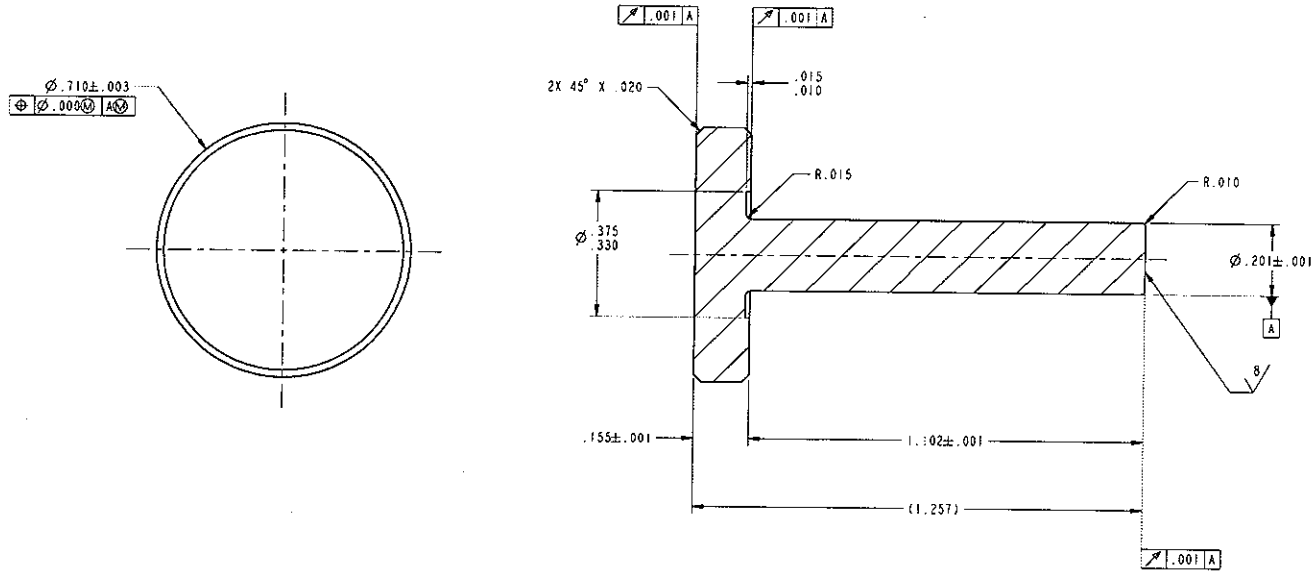

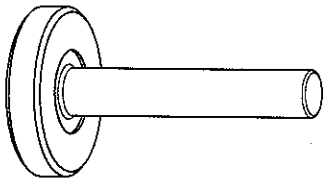

SCALE 4/1

DISTRIBUTION STATEMENT C-
DISTRIBUTION AUTHORIZED TO U.S. GOVERNMENT AGENCIES AND THEIR CONTRACTORS, ADMINISTRATIVE OR OPERATIONAL USE, 2010-03-05. OTHER REQUESTS FOR THIS DOCUMENT SHALL BE REFERRED TO COMMANDER, INDIAN HEAD DIVISION, NAVAL SURFACE WARFARE CENTER, 101 STRAUSS AVENUE INDIAN HEAD, MD. 20640-5035.

NEXT ASSY	USED ON
PVU-7/A CUP PRESS	PVU-7/A CUP PRESS

APPLICATION

UNLESS OTHERWISE SPECIFIED DIMENSIONS ARE IN INCHES
GENERAL TOLERANCES
XX DECIMALS ± .01
XXX DECIMALS ± .005
ANGLES ± 5°

MATERIAL: 2.

DO NOT SCALE DRAWING

INDIAN HEAD DIVISION
NAVAL SURFACE WARFARE CENTER
INDIAN HEAD, MD 20640-5035

ENGINEER		
ENGINEER		
CHECKED	SKETCH APPROVED	
DRAWN	2/10/2010	2010-03-05
APPROVED FOR USE		DATE

INDIAN HEAD DIVISION
NAVAL SURFACE WARFARE CENTER
INDIAN HEAD, MD 20640-5035

PVU-10/A CUP DIE
TOP STRIPPER

SIZE	CAGE CODE	DRAWING NUMBER
D	14083	SK10007-E26HA1-5
SCALE: NONE		SHEET 1 OF 1

CLASSIFICATION OF CHARACTERISTICS (DOD-STD-2101)	
CRITICAL-	NONE
MAJOR-	NONE
MINOR-	ALL CHARACTERISTICS

REVISIONS			
REV	DESCRIPTION	DATE	APPROVAL
	SGR SK10007-E26HA1		

CAD MAINTAINED. CHANGES SHALL BE INCORPORATED BY THE DESIGN ACTIVITY.

NOTES:

1. INTERPRET DRAWING IN ACCORDANCE WITH ASME Y14.100-2004 AND ASME Y14.5-2009, APPENDICES B-E.
2. MATERIAL: TOOL STEEL, AISI A2, Rc 58-62.
3. UNLESS OTHERWISE SPECIFIED:
   FINISH ALL SURFACES TO 32 MAX.
   REMOVE BURRS AND BREAK SHARP EDGES TO .005-.020.
   FILLETS .020 MAX.

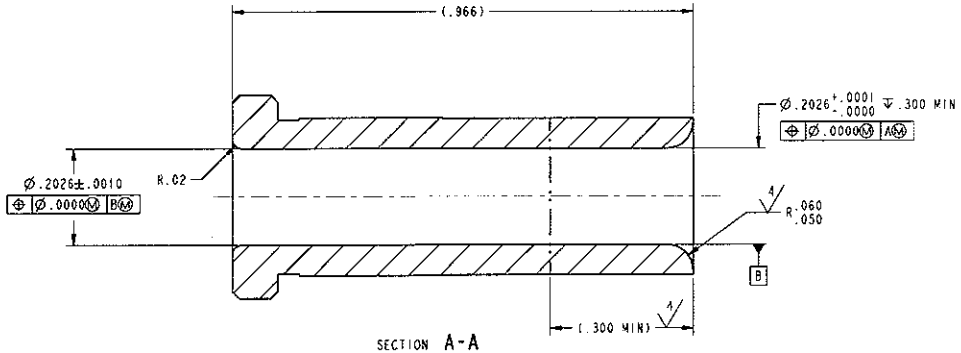

SECTION A-A

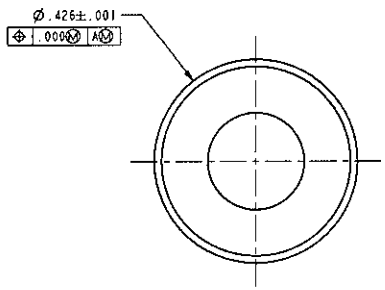

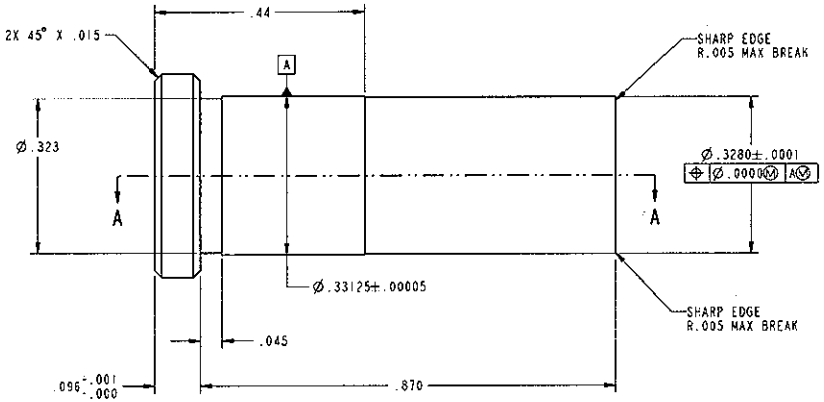

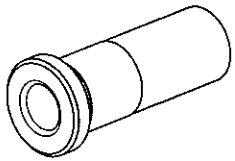

SCALE 4/1

DISTRIBUTION STATEMENT C:
DISTRIBUTION AUTHORIZED TO U.S. GOVERNMENT AGENCIES AND THEIR CONTRACTORS, ADMINISTRATIVE OR OPERATIONAL USE, 2010-03-04. OTHER REQUESTS FOR THIS DOCUMENT SHALL BE REFERRED TO COMMANDER, INDIAN HEAD DIVISION, NAVAL SURFACE WARFARE CENTER, 101 STRAUSS AVENUE INDIAN HEAD, MD. 20640-5035.

PVU-7A CUP PRESS	PVU-7A CUP PRESS
NEXT ASSY	USED ON
APPLICATION	

UNLESS OTHERWISE SPECIFIED DIMENSIONS ARE IN INCHES
GENERAL TOLERANCES
XX DECIMALS ± .01
XXX DECIMALS ± .001
ANGLES ± 5°
MATERIAL: 2
DO NOT SCALE DRAWING

INDIAN HEAD DIVISION
NAVAL SURFACE WARFARE CENTER
INDIAN HEAD, MD 20640-5035

ENGINEER
ENGINEER
CHECKED SKETCH APPROVED
DRAWN 3/10/2010 2010-03-04
APPROVED FOR KSC DATE

INDIAN HEAD DIVISION
NAVAL SURFACE WARFARE CENTER
INDIAN HEAD, MD 20640-5035

PVU-10/A CUP
DIE BUSHING

SIZE	CAGE CODE	DRAWING NUMBER
D	14083	SK10007-E26HA1-1

SCALE: NONE SHEET 1 OF 1

CLASSIFICATION OF CHARACTERISTICS (DOD-STD-2101)	
CRITICAL-	NONE
MAJOR-	NONE
MINOR-	ALL CHARACTERISTICS

REVISIONS			
REV	DESCRIPTION	DATE	APPROVAL
	SGR SK10007-E26HA1		

NOTES:

1. INTERPRET DRAWING IN ACCORDANCE WITH ASME Y14.100-2004 AND ASME Y14.5-2009, APPENDICES B-E.
2. MATERIAL: TOOL STEEL, AISI A2, Rc 57-60.
3. UNLESS OTHERWISE SPECIFIED:
   FINISH ALL SURFACES TO 32/ MAX.
   REMOVE BURRS AND BREAK SHARP EDGES TO .005-.020.
   FILLETS .020 MAX.

CAD MAINTAINED. CHANGES SHALL BE INCORPORATED BY THE DESIGN ACTIVITY.

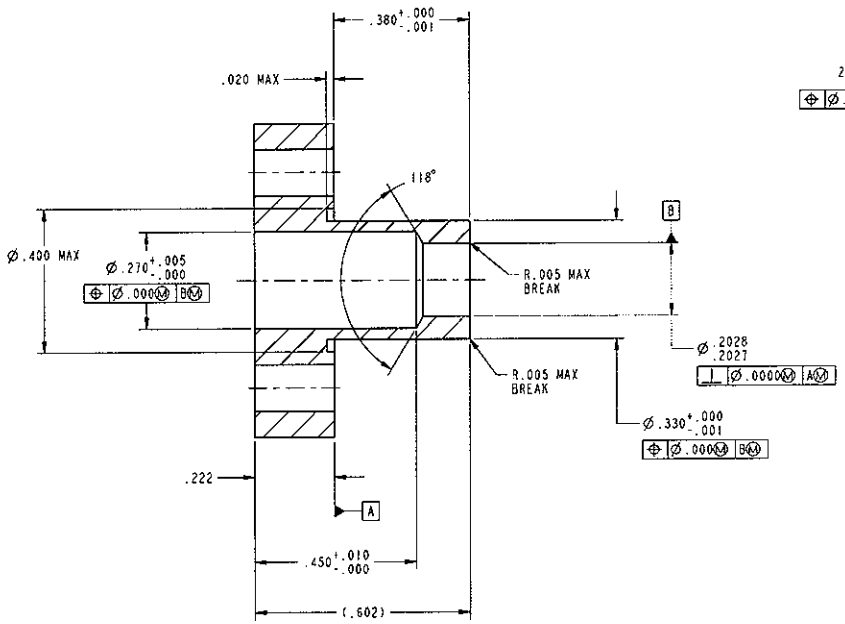

SECTION A-A

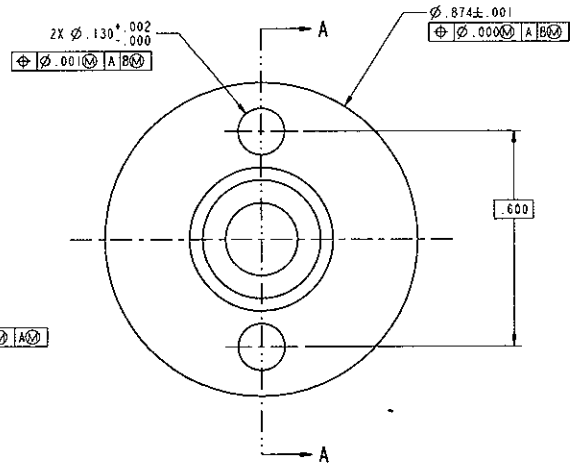

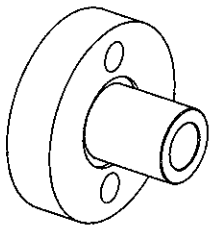

SCALE 4/1

DISTRIBUTION STATEMENT C:
DISTRIBUTION AUTHORIZED TO U.S. GOVERNMENT AGENCIES AND THEIR CONTRACTORS, ADMINISTRATIVE OR OPERATIONAL USE, 2010-03-05. OTHER REQUESTS FOR THIS DOCUMENT SHALL BE REFERRED TO COMMANDER, INDIAN HEAD DIVISION, NAVAL SURFACE WARFARE CENTER, 101 STRAUSS AVENUE INDIAN HEAD, MD. 20640-5035.

PVU-7/A CUP PRESS	PVU-7/A CUP PRESS
NEXT ASSY	USED ON
APPLICATION	

UNLESS OTHERWISE SPECIFIED DIMENSIONS ARE IN INCHES
GENERAL TOLERANCES
XX DECIMALS ± .01
XXX DECIMALS ± .005
ANGLES ± 5°
MATERIAL: 2
DO NOT SCALE DRAWING

INDIAN HEAD DIVISION
NAVAL SURFACE WARFARE CENTER
INDIAN HEAD, MD 20640-5035

ENGINEER		
ENGINEER		
CHECKED	SKETCH APPROVED	
DRAWN	3/10/2010	2010-03-05
APPROVED FOR NSWC	Phillip R Stigall	DATE

INDIAN HEAD DIVISION
NAVAL SURFACE WARFARE CENTER
INDIAN HEAD, MD 20640-5035

PVU-10/A CUP DIE
BOTTOM STRIPPER

SIZE	CAGE CODE	DRAWING NUMBER
D	14083	SK10007-E26HA1-2

SCALE: NONE SHEET 1 OF 1

CLASSIFICATION OF CHARACTERISTICS (DOD-STD-2101)	
CRITICAL-	NONE
MAJOR-	NONE
MINOR-	ALL CHARACTERISTICS

REVISIONS			
REV	DESCRIPTION	DATE	APPROVAL
	SGR SK10007-E26HA1		

NOTES:

1. INTERPRET DRAWING IN ACCORDANCE WITH ASME Y14.100-2004 AND ASME Y14.5-2009, APPENDICES B-E.
2. MATERIAL: TOOL STEEL, AISI A2, Rc 57-59.
3. UNLESS OTHERWISE SPECIFIED:
   FINISH ALL SURFACES TO 32 MAX.
   REMOVE BURRS AND BREAK SHARP EDGES TO .005-.020.
   FILLETS .020 MAX.

CAD MAINTAINED. CHANGES SHALL BE INCORPORATED BY THE DESIGN ACTIVITY.

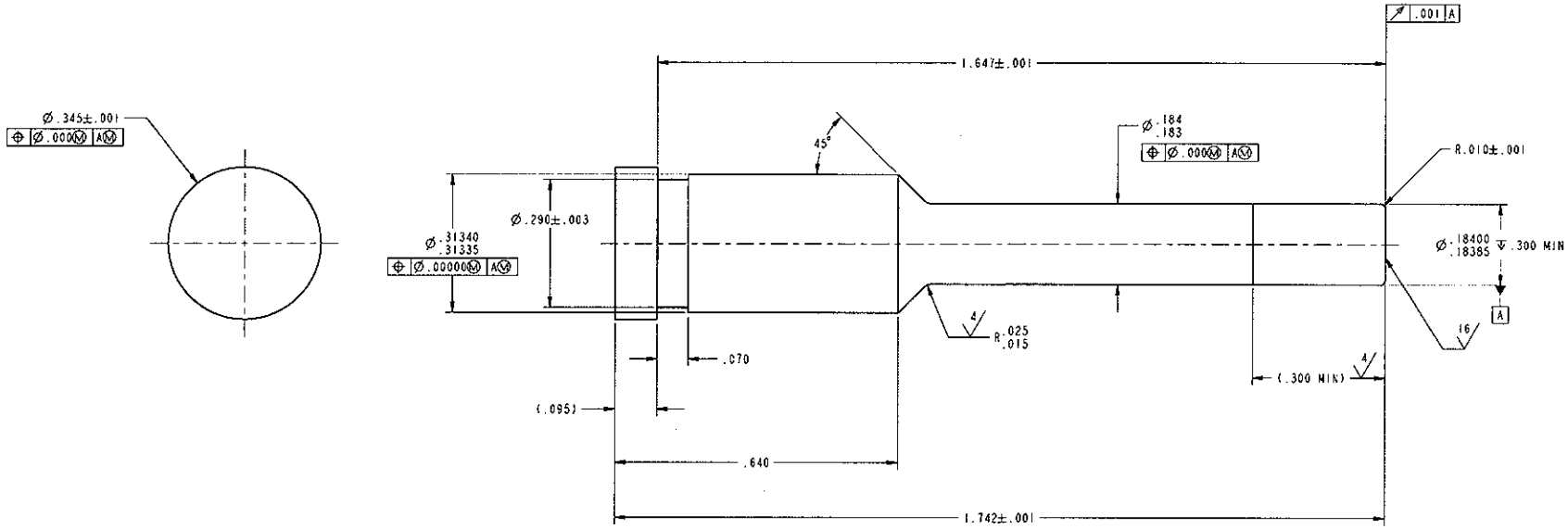

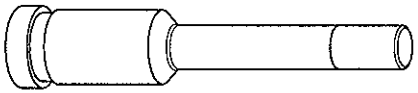

SCALE 4/1

DISTRIBUTION STATEMENT C:
DISTRIBUTION AUTHORIZED TO U.S. GOVERNMENT AGENCIES AND THEIR CONTRACTORS, ADMINISTRATIVE OR OPERATIONAL USE, 2010-03-05. OTHER REQUESTS FOR THIS DOCUMENT SHALL BE REFERRED TO COMMANDER, INDIAN HEAD DIVISION, NAVAL SURFACE WARFARE CENTER, 101 STRAUSS AVENUE INDIAN HEAD, MD. 20640-5035.

NEXT ASSY	USED ON
PVU-7/A CUP PRESS	PVU-7/A CUP PRESS
APPLICATION	

UNLESS OTHERWISE SPECIFIED DIMENSIONS ARE IN INCHES
GENERAL TOLERANCES
XX DECIMALS ± .01
XXX DECIMALS ± .005
ANGLES ± 3°

MATERIAL: 2.

DO NOT SCALE DRAWING

INDIAN HEAD DIVISION
NAVAL SURFACE WARFARE CENTER
INDIAN HEAD, MD 20640-5035

ENGINEER		
ENGINEER		
CHECKED	SKETCH APPROVED	
DRAWN	3/10/2010	2010-03-05
APPROVED FOR NSWC		DATE

INDIAN HEAD DIVISION
NAVAL SURFACE WARFARE CENTER
INDIAN HEAD, MD 20640-5035

PVU-10/A CUP
DIE-PUNCH

SIZE	CAGE CODE	DRAWING NUMBER
D	14083	SK10007-E26HA1-3
SCALE: NONE		SHEET 1 OF 1

CLASSIFICATION OF CHARACTERISTICS (DOD-STD-2101)	
CRITICAL-	NONE
MAJOR-	NONE
MINOR-	ALL CHARACTERISTICS

REVISIONS			
REV	DESCRIPTION	DATE	APPROVAL
	SGR SK10007-E26HA1		

CAD MAINTAINED. CHANGES SHALL BE INCORPORATED BY THE DESIGN ACTIVITY.

NOTES:

1. INTERPRET DRAWING IN ACCORDANCE WITH ASME Y14.100-2004 AND ASME Y14.5-2009, APPENDICES B-E.
2. MATERIAL: TOOL STEEL, AISI A2, Rc 57-60.
3. UNLESS OTHERWISE SPECIFIED:
   FINISH ALL SURFACES TO 32 MAX.
   REMOVE BURRS AND BREAK SHARP EDGES TO .005-.020.
   FILLETS .020 MAX.
4. PRESS FIT Ø.125 DRILL BLANK, FIND NO. 1, INTO Ø$^{.124}_{.126}$ HOLE AND GRIND TO DIMENSIONS SHOWN TWO PLACES.

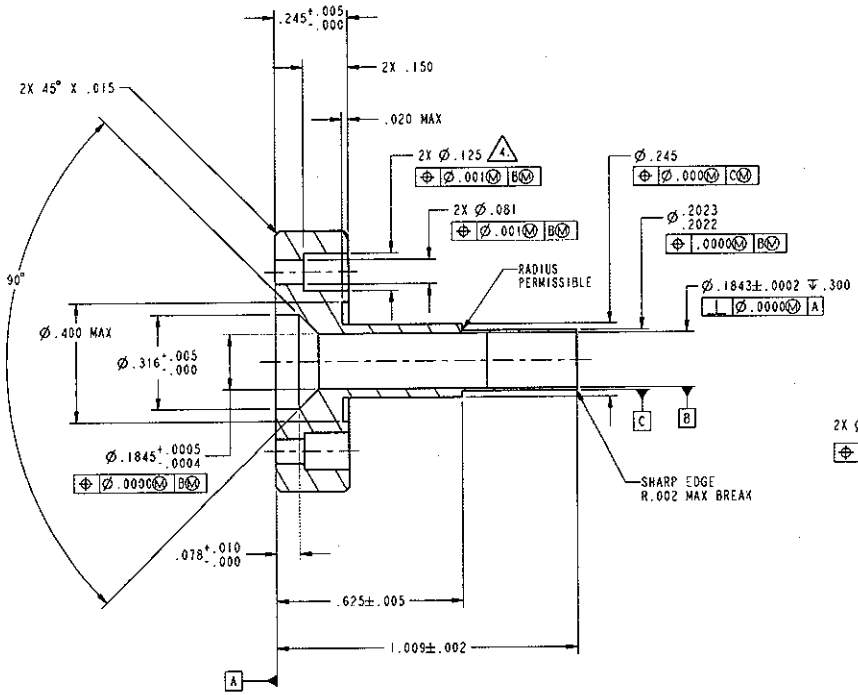

SECTION A-A
BLANK, FIND NO. 1, NOT SHOWN

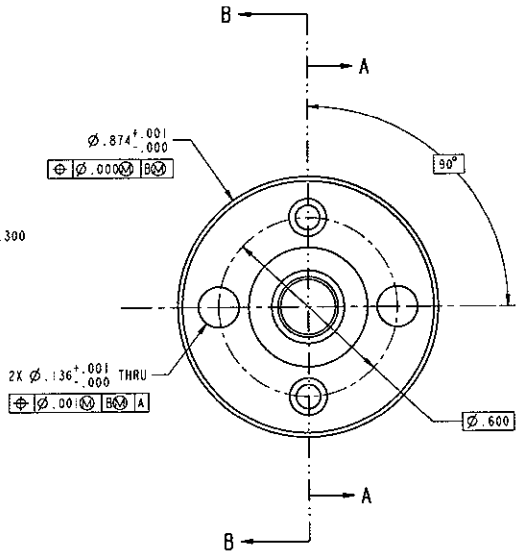

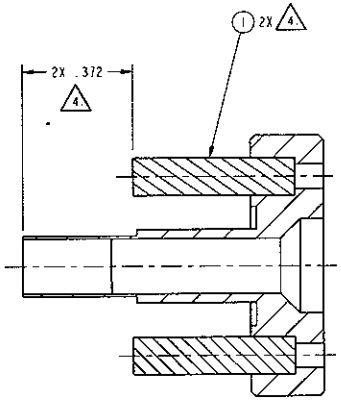

SECTION B-B

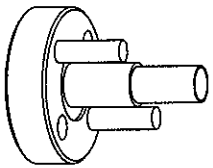

SCALE 3/1

DISTRIBUTION STATEMENT C:
DISTRIBUTION AUTHORIZED TO U.S. GOVERNMENT AGENCIES AND THEIR CONTRACTORS, ADMINISTRATIVE OR OPERATIONAL USE, 2010-03-05. OTHER REQUESTS FOR THIS DOCUMENT SHALL BE REFERRED TO COMMANDER, INDIAN HEAD DIVISION, NAVAL SURFACE WARFARE CENTER, 101 STRAUSS AVENUE INDIAN HEAD, MD. 20640-5035.

FIND NO	QTY REQ	CAGE CODE	PART OR IDENTIFYING NO	SPECIFICATION	NOMENCLATURE OR DESCRIPTION	MATERIAL OR NOTE
1	2		COMMERCIAL		BLANK, Ø.125	4.

PARTS LIST

PVU-7/A CUP PRESS	PVU-7/A CUP PRESS
NEXT ASSY	USED ON
APPLICATION	

UNLESS OTHERWISE SPECIFIED DIMENSIONS ARE IN INCHES
GENERAL TOLERANCES
XX DECIMALS ± .01
XXX DECIMALS ± .001
ANGLES ± 3°
MATERIAL: 2.
DO NOT SCALE DRAWING

INDIAN HEAD DIVISION
NAVAL SURFACE WARFARE CENTER
INDIAN HEAD, MD 20640-5035

ENGINEER		
ENGINEER		
CHECKED	SKETCH APPROVED	
DRAWN	3/10/2010	2010-03-05
APPROVED FOR NSWC	Phillip R. Stegall	DATE

INDIAN HEAD DIVISION
NAVAL SURFACE WARFARE CENTER
INDIAN HEAD, MD 20640-5035

PVU-10/A CUP
DIE PINCH

SIZE	CAGE CODE	DRAWING NUMBER
D	14083	SK10007-E26HA1-4

SCALE: NONE | SHEET 1 OF 1

NOTE:

1. INTERPRET DRAWING IN ACCORDANCE WITH ASME Y14.5M-1994 AND ASME Y14.100-2000 WITH APPENDICES B,C,D AND E.

2. UNLESS OTHERWISE SPECIFED, REMOVE BURRS, BREAK SHARP EDGES .005-.020, FILLETS .020 MAX.

CLASSIFICATION OF CHARACTERISTICS (DOD-STD-2101)	
CRITICAL-	NONE
MAJOR-	NONE
MINOR-	ALL OTHER CHARACTERISTICS

REVISIONS			
REV	DESCRIPTION	DATE	APPROVAL

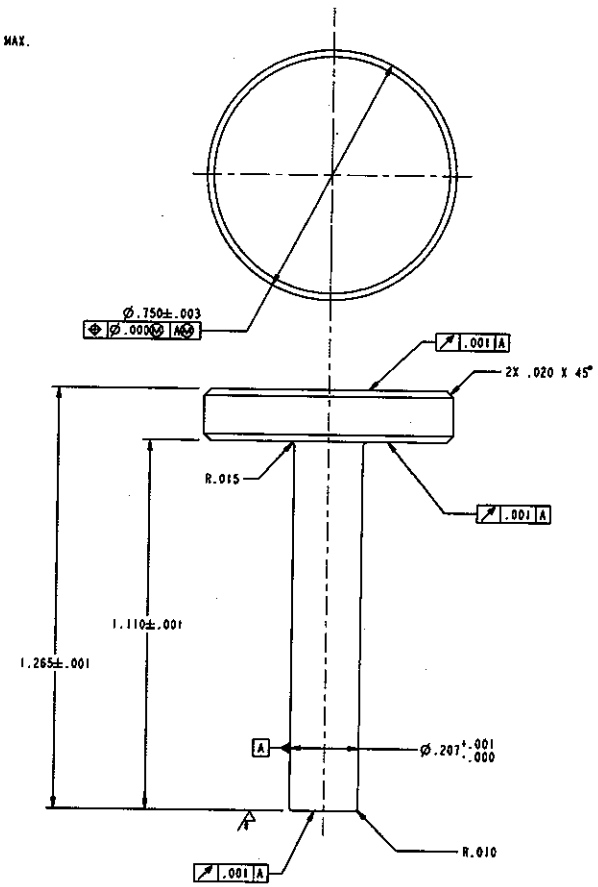

SCALE 6.000

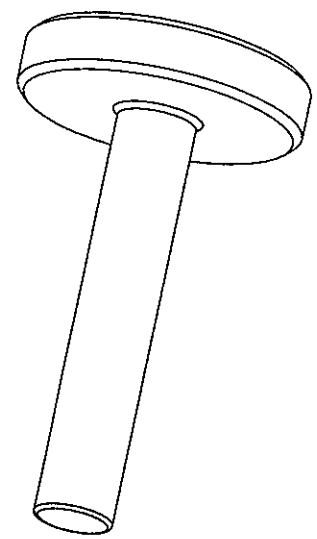

SCALE 1.000

DISTRIBUTION STATEMENT C: Distribution authorized to U.S. Government agencies and their contractors administrative or operational use, 7-1-93. Other requests for this document shall be referred to Commander, Indian Head Division, Naval Surface Warfare Center, Indian Head, MD 20640-5035.

NEXT ASSY	USED ON
PVU-7/A CUP PRESS	PVU-7/A CUP PRESS
APPLICATION	

UNLESS OTHERWISE SPECIFIED DIMENSIONS ARE IN INCHES
GENERAL TOLERANCES
XX DECIMALS ± 0.01
XXX DECIMALS ± 0.001
ANGLES ± 5.0°

MATERIAL:
TOOL STEEL
AISI A2
Rc 55-60

DO NOT SCALE DRAWING

INDIAN HEAD DIVISION
NAVAL SURFACE WARFARE CENTER
INDIAN HEAD, MD 20640-5035

ENGINEER		
ENGINEER		
CHECKED	SKETCH APPROVED 2009/12/15	
DRAWN	HARRY ARCHER	
APPROVED FOR		DATE 2009-12-15

DEPARTMENT OF THE NAVY

PVU-7/A CUP DIE
TOP STRIPPER

SIZE	CAGE CODE	DRAWING NUMBER
D	14083	SK09057-E26HA1-5

SCALE: 3.000 WEIGHT: 1.21 lb SHEET 1 OF 1

NOTE:

1. INTERPRET DRAWING IN ACCORDANCE WITH ASME Y14.5M-1994 AND ASME Y14.100-2000 WITH APPENDICES B,C,D AND E.

2. UNLESS OTHERWISE SPECIFIED, REMOVE BURRS, BREAK SHARP EDGES .005-.020, FILLETS .020 MAX.

CLASSIFICATION OF CHARACTERISTICS (DOD-STD-2101)	
CRITICAL-	NONE
MAJOR-	NONE
MINOR-	ALL OTHER CHARACTERISTICS

REVISIONS			
REV	DESCRIPTION	DATE	APPROVAL

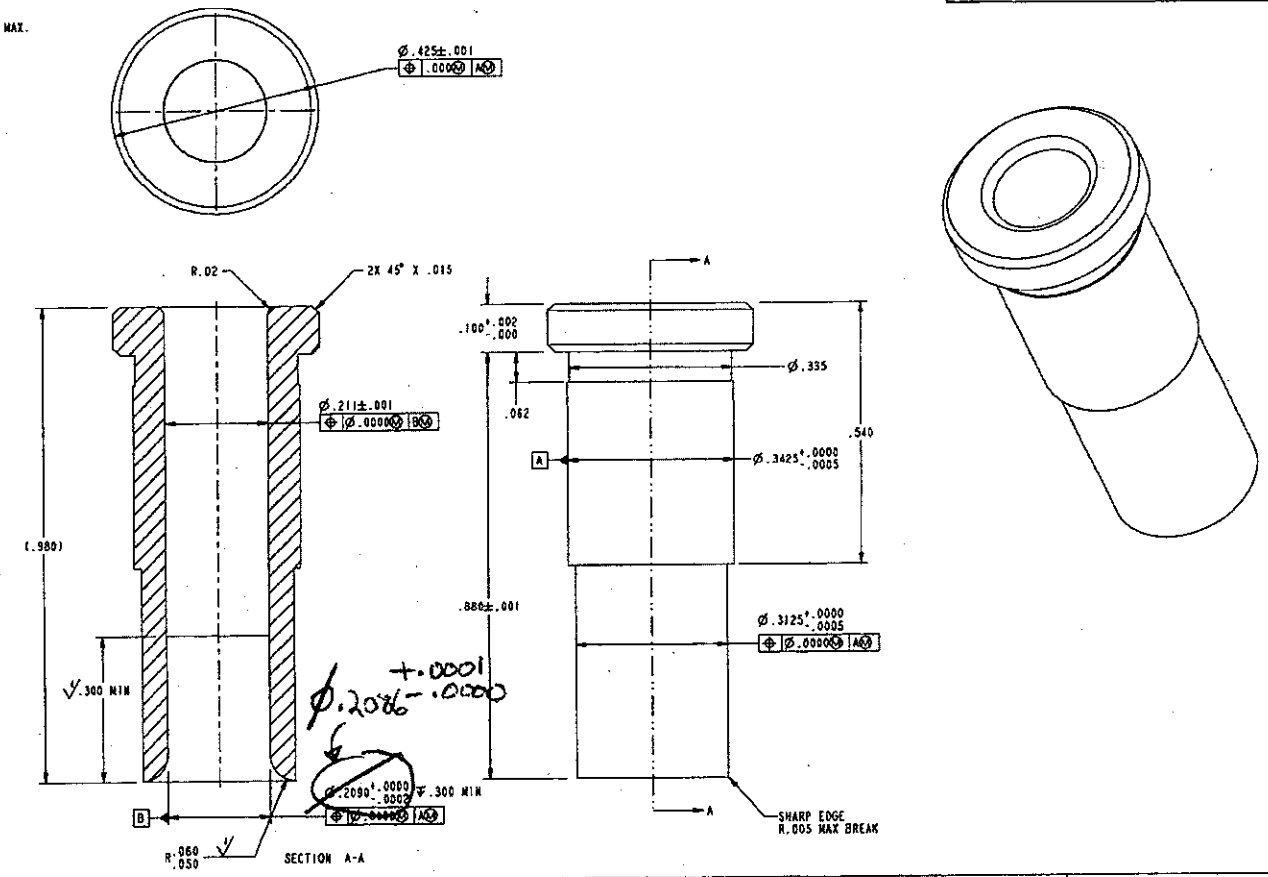

DISTRIBUTION STATEMENT C: Distribution authorized to U.S. Government agencies and their contractors administrative or operational use, 7-1-93. Other requests for this document shall be referred to Commander, Indian Head Division, Naval Surface Warfare Center, Indian Head, MD 20640-5035.

PVU-7A CUP PRESS	PVU-7A CUP PRESS
NEXT ASSY	USED ON
APPLICATION	

UNLESS OTHERWISE SPECIFIED DIMENSIONS ARE IN INCHES
GENERAL TOLERANCES
XX DECIMALS ± 0.01
XXX DECIMALS ± 0.001
ANGLES ± 5.0°

MATERIAL:
TOOL STEEL
AISI A2
Rc 58-62

DO NOT SCALE DRAWING

INDIAN HEAD DIVISION
NAVAL SURFACE WARFARE CENTER
INDIAN HEAD, MD 20640-5035

ENGINEER		12-15-09
ENGINEER		12-15-2009
CHECKED		12-15-09
DRAWN	HARRY ARCHER	2009-12-09
APPROVED FOR		DATE 2009-12-15

DEPARTMENT OF THE NAVY

PVU-7/A CUP
DIE BUSHING

SIZE	CAGE CODE	DRAWING NUMBER
D	14083	SK09057-E26HA1-1

SCALE: 6.000 | WEIGHT: (.2) lb | SHEET 1 OF 1

NAME:HARRY.ARCHER OBJECT:SK09057-E26HA1-1 DATE:15-Dec-09 15:54:23

NOTE:

1. INTERPRET DRAWING IN ACCORDANCE WITH ASME Y14.5M-1994 AND ASME Y14.100-2000 WITH APPENDICES B,C,D AND E.

2. UNLESS OTHERWISE SPECIFED, REMOVE BURRS, BREAK SHARP EDGES .005-.020, FILLETS .020 MAX.

CLASSIFICATION OF CHARACTERISTICS (DOD-STD-2101)	
CRITICAL-	NONE
MAJOR-	NONE
MINOR-	ALL OTHER CHARACTERISTICS

REVISIONS			
REV	DESCRIPTION	DATE	APPROVAL

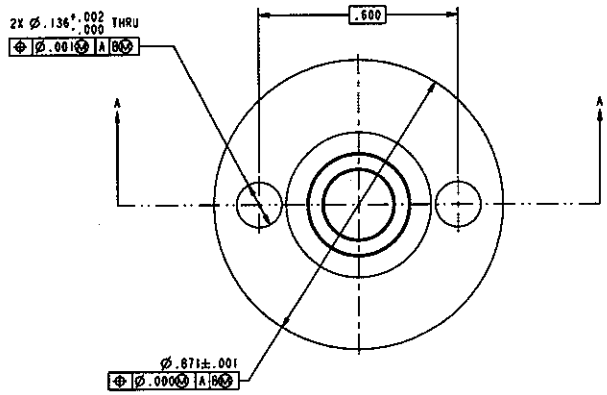

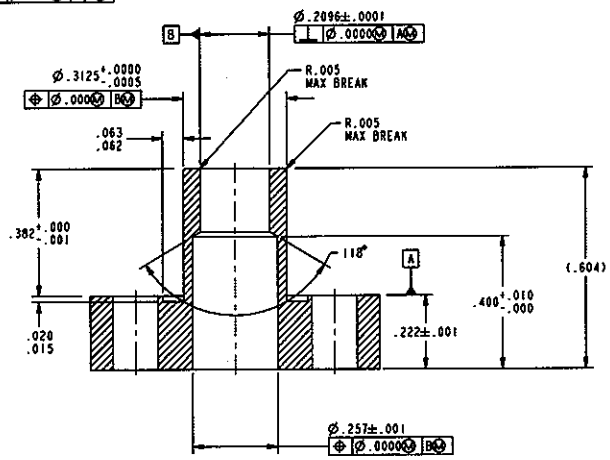

SECTION A-A

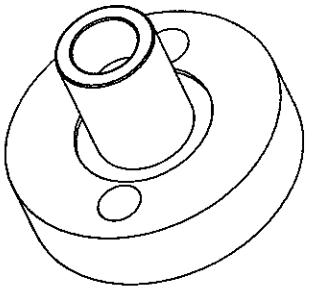

DISTRIBUTION STATEMENT C: Distribution authorized to U.S. Government agencies and their contractors administrative or operational use, 7-1-93. Other requests for this document shall be referred to Commander, Indian Head Division, Naval Surface Warfare Center, Indian Head, MD 20640-5035.

PVU-7/A CUP PRESS	PVU-7/A CUP PRESS
NEXT ASSY	USED ON
APPLICATION	

UNLESS OTHERWISE SPECIFIED DIMENSIONS ARE IN INCHES
GENERAL TOLERANCES
XX DECIMALS ± 0.01
XXX DECIMALS ± 0.005
ANGLES ± 5.0°

MATERIAL:
TOOL STEEL
AISI A2
Rc 57-60

DO NOT SCALE DRAWING

INDIAN HEAD DIVISION
NAVAL SURFACE WARFARE CENTER
INDIAN HEAD, MD 20640-5035

ENGINEER
ENGINEER
CHECKED
DRAWN HARRY ARCHER
APPROVED FOR DATE 2009-12-15

SKETCH APPROVED 20091215

DEPARTMENT OF THE NAVY

PVU-7/A CUP DIE
BOTTOM STRIPPER

SIZE	CAGE CODE	DRAWING NUMBER
D	14083	SK09057-E26HA1-2

SCALE: 5.000 WEIGHT: 1.21 lb SHEET 1 OF 1

NOTE:

1. INTERPRET DRAWING IN ACCORDANCE WITH ASME Y14.5M-1994 AND ASME Y14.100-2000 WITH APPENDICES B,C,D AND E.
2. UNLESS OTHERWISE SPECIFIED, REMOVE BURRS, BREAK SHARP EDGES .005-.020, FILLETS .020 MAX.

R.015

CLASSIFICATION OF CHARACTERISTICS (DOD-STD-2101)	
CRITICAL-	NONE
MAJOR-	NONE
MINOR-	ALL OTHER CHARACTERISTICS

REVISIONS			
REV	DESCRIPTION	DATE	APPROVAL

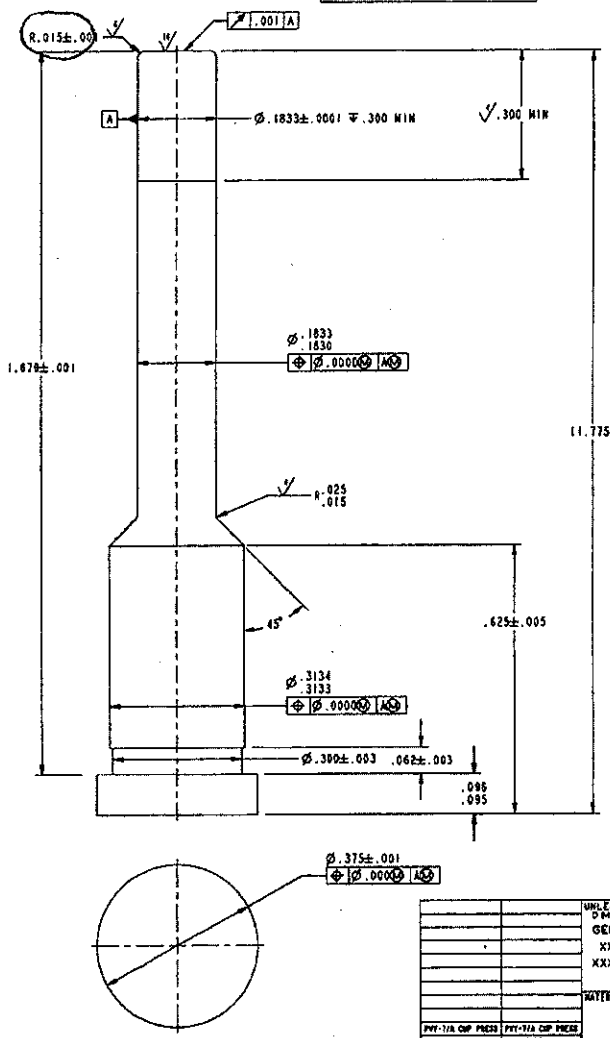

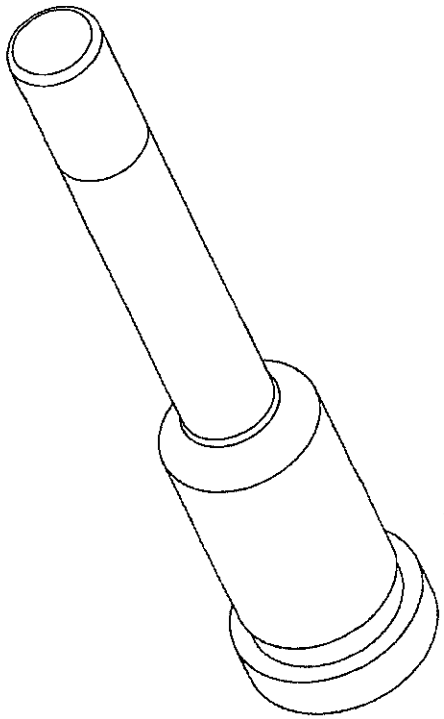

DISTRIBUTION STATEMENT C: Distribution authorized to U.S. Government agencies and their contractors administrative or operational use, 7-1-93. Other requests for this document shall be referred to Commander, Indian Head Division, Naval Surface Warfare Center, Indian Head, MD 20640-5035.

PVU-7/A CUP PRESS	PVU-7/A CUP PRESS
NEXT ASSY	USED ON
APPLICATION	

UNLESS OTHERWISE SPECIFIED DIMENSIONS ARE IN INCHES
GENERAL TOLERANCES
XX DECIMALS ± 0.01
XXX DECIMALS ± 0.005
ANGLES ± 3.0°

MATERIAL: TOOL STEEL AISI A2 Rc 57-59

DO NOT SCALE DRAWING

INDIAN HEAD DIVISION
NAVAL SURFACE WARFARE CENTER
INDIAN HEAD, MD 20640-5035

ENGINEER		12/15/09
ENGINEER		12-15-2009
CHECKED		12-15-09
DRAWN	HARRY ARCHER	
APPROVED FOR (REQUIRED)		DATE 2001-12-15

DEPARTMENT OF THE NAVY

PVU-7/A CUP
DIE-PUNCH

SIZE	CAGE CODE	DRAWING NUMBER
D	14083	SK09057-E26HA1-3

SCALE: 4.000 WEIGHT: 1.21 lb SHEET 1 OF 1

NAME:HARRY.ARCHER OBJECT:SK09057-E26HA1-3 DATE:15-Dec-09 15:56:53

NOTE:

1. INTERPRET DRAWING IN accordance WITH ASME Y14.5M-1994 AND ASME Y14.100-2000 WITH APPENDICES B,C,D AND E.
2. UNLESS OTHERWISE SPECIFED, REMOVE BURRS, BREAK SHARP EDGES .005-.020, FILLETS .020 MAX.
3. PRESS FIT Ø.125 DRILL BLANK INTO Ø.124 TO Ø.126 HOLE AND GRIND TO DIMENSIONS SHOWN 2 PLACES.

CLASSIFICATION OF CHARACTERISTICS (DOD-STD-2101)	
CRITICAL-	NONE
MAJOR-	NONE
MINOR-	ALL OTHER CHARACTERISTICS

REVISIONS			
REV	DESCRIPTION	DATE	APPROVAL

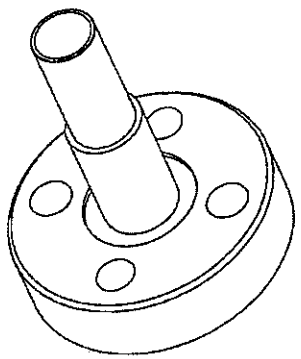

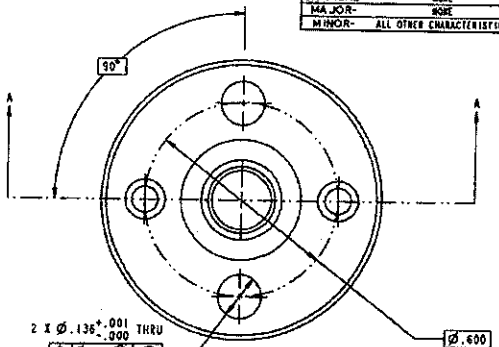

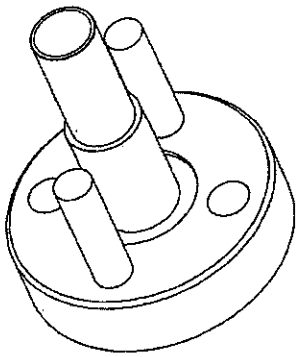

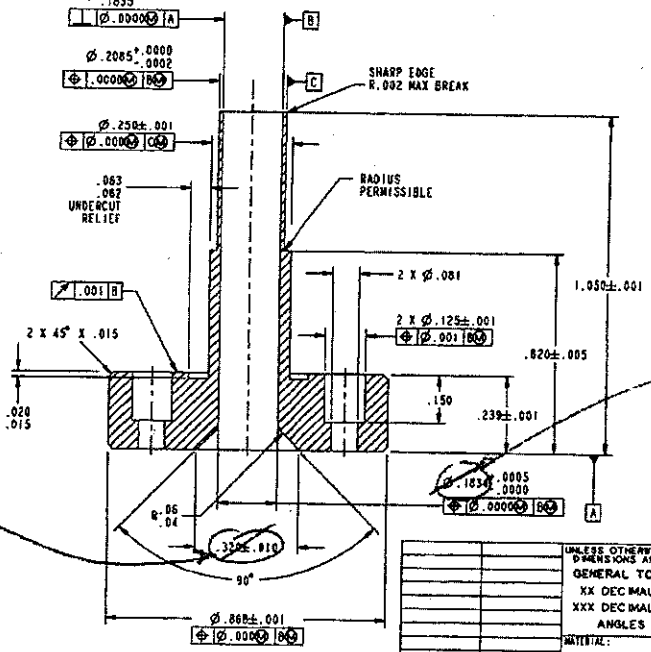

SECTION A-A

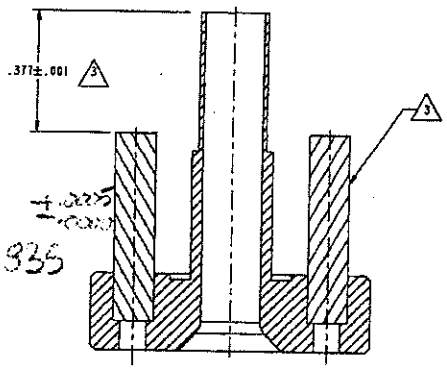

VØ .360 ± .005

Ø.1335

DISTRIBUTION STATEMENT C: Distribution authorized to U.S. Government agencies and their contractors administrative or operational use, 7-1-93. Other requests for this document shall be referred to Commander, Indian Head Division, Naval Surface Warfare Center, Indian Head, MD 20640-5035.

PVU-7/A CUP PRESS	PVU-7/A CUP PRESS	
NEXT ASSY	USED ON	
APPLICATION		

UNLESS OTHERWISE SPECIFIED DIMENSIONS ARE IN INCHES
GENERAL TOLERANCES
XX DECIMALS ± 0.01
XXX DECIMALS ± 0.001
ANGLES ± 0.5°
MATERIAL: TOOL STEEL AISI A2 Rc 57 - 60
DO NOT SCALE DRAWING

INDIAN HEAD DIVISION
NAVAL SURFACE WARFARE CENTER
INDIAN HEAD, MD 20640-5035

DEPARTMENT OF THE NAVY

ENGINEER		12-15-04
ENGINEER		12-15-2004
CHECKED		12-15-04
DRAWN	BARRY ARCHER	
APPROVED FOR		DATE 2004-12-15

PVU-7/A CUP
DIE PINCH

SIZE	CAGE CODE	DRAWING NUMBER
D	14083	SK09057-E26HA1-4
SCALE: 4.000	WEIGHT: 1.21 lb	SHEET 1 OF 1

NAME:HARRY.ARCHER OBJECT:SK09057-E26HA1-4 DATE:15-Dec-09 16:14:07

CLASSIFICATION OF CHARACTERISTICS (DOD-STD-2101)	
CRITICAL-	NONE
MAJOR-	NONE
MINOR-	ALL OTHER CHARACTERISTICS

REVISIONS			
REV	DESCRIPTION	DATE	APPROVAL

NOTE:

1. INTERPRET DRAWING IN ACCORDANCE WITH ASME Y14.5M-1994 AND ASME Y14.100-2000 WITH APPENDICES B,C,D AND E.
2. UNLESS OTHERWISE SPECIFED, REMOVE BURRS, BREAK SHARP EDGES .005-.020, FILLETS .020 MAX.

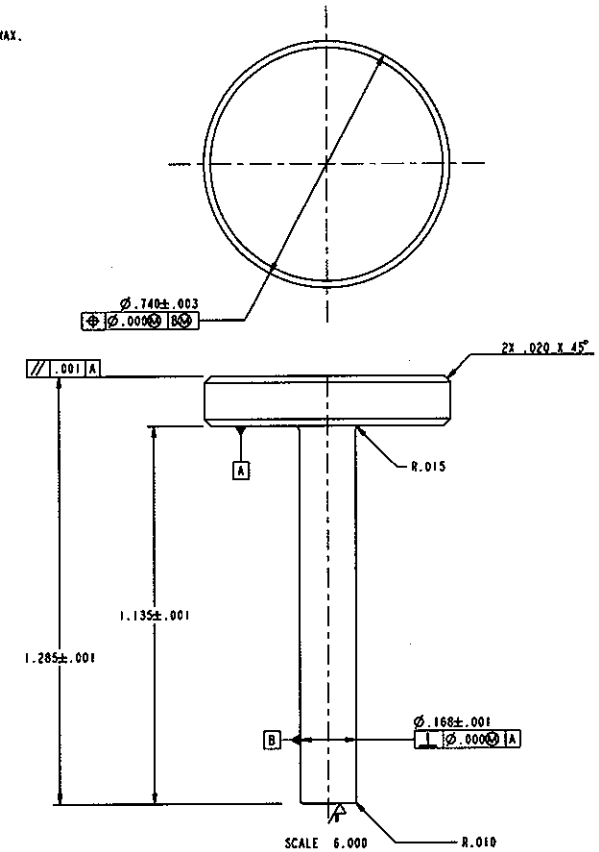

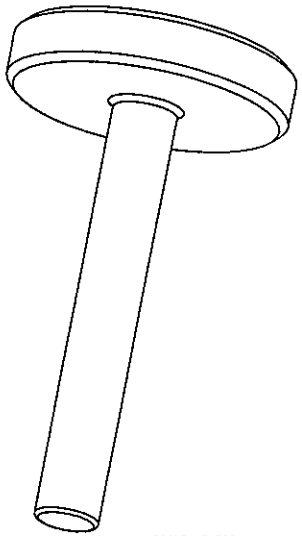

DISTRIBUTION STATEMENT C: Distribution authorized to U.S. Government agencies and their contractors administrative or operational use, 7-1-93. Other requests for this document shall be referred to Commander, Indian Head Division, Naval Surface Warfare Center, Indian Head, MD 20640-5035.

PVU-2/A CUP PRESS	PVU-2/A CUP PRESS
NEXT ASSY	USED ON
APPLICATION	

UNLESS OTHERWISE SPECIFIED DIMENSIONS ARE IN INCHES
GENERAL TOLERANCES
XX DECIMALS ± 0.01
XXX DECIMALS ± 0.001
ANGLES ± 5.0°

MATERIAL:
TOOL STEEL
AISI A2
Rc 55-60

DO NOT SCALE DRAWING

INDIAN HEAD DIVISION
NAVAL SURFACE WARFARE CENTER
INDIAN HEAD, MD 20640-5035

ENGINEER		
ENGINEER		
CHECKED	SKETCH APPROVED	
DRAWN	20100702104	
APPROVED FOR		DATE

DEPARTMENT OF THE NAVY

PVU-2/A CUP DIE
TOP STRIPPER

SIZE	CAGE CODE	DRAWING NUMBER
D	14083	SK09034-E213L-5

SCALE: 3.000 | WEIGHT: [.2] lb | SHEET 1 OF 1